MARTIN MARIETTA ENERGY SYSTEMS LIBRARIES

3 4456 0056758 0

ORNL/TM-9496

ornl

OAK RIDGE
NATIONAL
LABORATORY

MARTIN MARIETTA

Shallow Land Burial of Low-Level Radioactive Waste

J. B. Cannon
D. G. Jacobs
D. W. Lee
C. C. Gilmore
R. H. Ketelle
F. C. Kornegay
R. D. Roop
W. P. Staub
L. E. Stratton
R. E. Thoma
J. W. Van Dyke

OAK RIDGE NATIONAL LABORATORY
CENTRAL RESEARCH LIBRARY
CIRCULATION SECTION
4500N ROOM 175
LIBRARY LOAN COPY
DO NOT TRANSFER TO ANOTHER PERSON
If you wish someone else to see this report, send in name with report and the library will arrange a loan.

OPERATED BY
MARTIN MARIETTA ENERGY SYSTEMS, INC.
FOR THE UNITED STATES
DEPARTMENT OF ENERGY

Printed in the United States of America. Available from
National Technical Information Service
U.S. Department of Commerce
5285 Port Royal Road, Springfield, Virginia 22161
NTIS price codes—Printed Copy: A08 Microfiche A01

This report was prepared as an account of work sponsored by an agency of the United States Government. Neither the United States Government nor any agency thereof, nor any of their employees, makes any warranty, express or implied, or assumes any legal liability or responsibility for the accuracy, completeness, or usefulness of any information, apparatus, product, or process disclosed, or represents that its use would not infringe privately owned rights. Reference herein to any specific commercial product, process, or service by trade name, trademark, manufacturer, or otherwise, does not necessarily constitute or imply its endorsement, recommendation, or favoring by the United States Government or any agency thereof. The views and opinions of authors expressed herein do not necessarily state or reflect those of the United States Government or any agency thereof.

ORNL/TM-9496

ENERGY DIVISION

SHALLOW LAND BURIAL OF LOW-LEVEL RADIOACTIVE WASTE

J. B. Cannon

D. G. Jacobs*
D. W. Lee
C. C. Gilmore
R. H. Ketelle
F. C. Kornegay
R. D. Roop
W. P. Staub
L. E. Stratton
R. E. Thoma
J. W. Van Dyke

*MAXIMA Corporation

Date Published - February 1986

OAK RIDGE NATIONAL LABORATORY
Oak Ridge, Tennessee 37831
operated by
MARTIN MARIETTA ENERGY SYSTEMS, INC.
for the
U.S. DEPARTMENT OF ENERGY
under
Contract No. DE-AC05-84OR21400

MARTIN MARIETTA ENERGY SYSTEMS LIBRARIES

3 4456 0056758 0

CONTENTS

Page

LIST OF FIGURES v

LIST OF TABLES vii

FOREWORD ix

ABSTRACT xi

1. INTRODUCTION 1

2. SYSTEMS APPROACH TO SHALLOW LAND BURIAL 3
   2.1 BACKGROUND 3
   2.2 KEYS TO SUCCESS 5
   2.3 PERFORMANCE OBJECTIVES 7
   2.4 TECHNICAL CONSIDERATIONS 9
      2.4.1 Waste Characteristics 10
      2.4.2 Site Characteristics 11
      2.4.3 Design 12
      2.4.4 Operating Practices 12
      2.4.5 Closure 13
   2.5 PERFORMANCE ASSESSMENT 13
      2.5.1 Waste Isolation 13
      2.5.2 Disposal Site Stability 14
      2.5.3 Radionuclide Migration 14
   2.6 PLANNING 20
   2.7 LEARNING FROM EXPERIENCE 22
REFERENCES FOR CHAPTER 2 23

3. SITE SELECTION 25
   3.1 OBJECTIVES 25
   3.2 SITE SELECTION PROCESS 27
   3.3 INFORMATION NEEDS 29
      3.3.1 Hydrology 29
      3.3.2 Geology 32
      3.3.3 Meteorology 33
      3.3.4 Ecology 33
      3.3.5 Land Use and Socioeconomics 33
REFERENCES FOR CHAPTER 3 34

4. SITE CHARACTERIZATION 35
   4.1 OBJECTIVES 35
   4.2 METHODOLOGY 37
   4.3 TECHNIQUES 40
      4.3.1 Geology 42
      4.3.2 Hydrology 59
      4.3.3 Meteorology 65
      4.3.4 Ecology 67
      4.3.5 Land Use and Socioeconomics 68
      4.3.6 Summary 69
REFERENCES FOR CHAPTER 4 70

Page

5. DESIGN 73
5.1 OBJECTIVES 73
5.2 FACTORS INFLUENCING THE SELECTION OF DESIGN OPTIONS 75
5.2.1 Site Characteristics 75
5.2.2 Waste Characteristics 77
5.2.3 Operating Practices and Closure 79
5.2.4 Summary 81
5.3 DISPOSAL UNIT DESIGN 81
5.3.1 Waste Trench 81
5.3.2 Trench Drainage 84
5.3.3 Trench Backfill 88
5.3.4 Trench Cover 90
5.4 DISPOSAL SITE 96
5.4.1 Site Layout 96
5.4.2 Site Drainage 97
5.4.3 Disposal Unit Alignment and Sequencing 104
5.5 SUMMARY 104
REFERENCES FOR CHAPTER 5 109

6. DISPOSAL SYSTEMS OPERATIONS 111
6.1 OBJECTIVES 111
6.2 SITE PREPARATION AND DISPOSAL UNIT CONSTRUCTION 112
6.3 WASTE ACCEPTANCE 117
6.4 WASTE HANDLING AND EMPLACEMENT 121
6.5 DISPOSAL UNIT CLOSURE 125
6.6 RADIATION MONITORING PROGRAM 127
6.6.1 Personnel Monitoring 128
6.6.2 Environmental Monitoring 129
6.7 ADMINISTRATIVE FUNCTIONS 131
REFERENCES FOR CHAPTER 6 134

7. SITE CLOSURE 135
7.1 OBJECTIVES 135
7.2 CLOSURE PLANS 136
7.3 SITE CLOSURE OPERATIONS 139
7.3.1 Site Drainage 140
7.3.2 Erosion Control 141
7.3.3 Protection Against Subsidence 141
7.4 SUMMARY 142
REFERENCES FOR CHAPTER 7 143

LIST OF FIGURES

Figure		Page
2.1	Schematic of a systems approach to shallow land burial	6
2.2	Model pathway diagram for a low-level waste burial facility	16
2.3	Long-range plan for a new shallow land burial facility for low-level radioactive waste	21
3.1	The schematic representation of the site selection process	28
4.1	A methodology for site characterization	38
4.2	Phases of a detailed field investigation for site characterization	41
5.1	Conceptual design of a slit trench	83
5.2	Schematic diagram of disposal trenches at the Barnwell, South Carolina facility	86
5.3	Conceptual design of the wick drainage system for low-level waste trenches	87
5.4	Conceptual design of a multilayered trench cover	92
5.5	Conceptual design of overlapping trench covers	94
5.6	Conceptual design of the "Russian Doll" system	95
5.7	Typical plot plan for a shallow land burial facility	98
5.8	Features of a diversion drainage system	101
5.9	Typical design of a temporary diversion dike	102
5.10	Common types of tube drainage systems	104
5.11	Trench orientation for sloped topography	106
5.12	Typical site utilization plan for a shallow land burial facility	107
6.1	Low-level waste transport truck at Oak Ridge National Laboratory, Oak Ridge, Tennessee	119
6.2	Commercial trucks at Barnwell, South Carolina	119
6.3	Standardized radioactive shipment record form	120
6.4	Stacking of waste packages in a typical trench at Barnwell, South Carolina	123
6.5	Quality assurance at a low-level waste facility	133
7.1	Sequence and approximate time requirements for activities related to site closure, postclosure, and institutional control	137

LIST OF TABLES

Table		Page
3.1	Information needs and sources for site screening objectives	30
4.1	Typical input parameters for geohydrologic modeling	44
4.2	Geologic characterization parameters and methods of investigation	46
4.3	Methods for geologic characterization	47
4.4	Summary of surface geophysical techniques	48
4.5	Commonly used subsurface exploration methods	50
4.6	Soil and rock sampling methods and general application conditions	51
4.7	Commonly used field tests for in situ testing of soil and bedrock	52
4.8	Typical soil engineering properties determined in the laboratory	56
4.9	Hydrologic surface and groundwater characterization parameters and methods of investigation	60
5.1	Site characteristics important in the design of a shallow land burial facility	76
5.2	Factors to be considered in the identification of waste types	77
5.3	Factors to be considered in evaluating the stability of a waste type	78
5.4	Elements of operations to be considered in design plan development	79
5.5	Elements of the closure plan to be considered in the design plan	80
5.6	Trench sizes at existing shallow land burial facilities	82
5.7	Trench-capping procedures at shallow land burial facilities	93
5.8	Functions to be considered in site layout	96
6.1	Components of operations plan	113
6.2	Construction equipment and applications for shallow land burial	115
6.3	Reference facility operational monitoring program	130
7.1	Technical matters to be addressed in site closure plan	138

FOREWORD

This report evolved from the Department of Energy Low-Level Radioactive Waste Management Program's task of developing a handbook on the procedures and technology required to site, construct, operate, and close a shallow land burial facility for low-level radioactive waste. Oak Ridge National Laboratory authored a report (DOE/LLW-13Td) addressing the subject as part of the DOE Low-Level Radioactive Waste Management Handbook Series. Further consideration of the interrelationships between the waste, disposal site, facility design features, and operating practices for achieving waste isolation and radionuclide containment led to this report--a revised version of DOE/LLW-13Td that emphasizes a systems approach to shallow land burial. It contains updated information and illustrates how the performance objectives for shallow land burial generate technical requirements for each phase of development and operation of the facility. Like its predecessor, this report is not intended to be an instruction manual. Rather, emphasis is placed on understanding the technical requirements and knowing what information and analyses are needed for making informed choices to meet those requirements.

ABSTRACT

The performance objectives included in regulations for disposal of low-level radioactive waste (10 CFR 61 for commercial waste and DOE Order 5820.2 for defense waste) are generic principles that generate technical requirements which must be factored into each phase of the development and operation of a shallow land burial facility. These phases include a determination of the quantity and characteristics of the waste, selection of a site and appropriate facility design, use of sound operating practices, and closure of the facility. The collective experience concerning shallow land burial operations has shown that achievement of the performance objectives (specifically, waste isolation and radionuclide containment) requires a systems approach, factoring into consideration the interrelationships of the phases of facility development and operation and their overall impact on performance.

This report presents the technical requirements and procedures for the development and operation of a shallow land burial facility for low-level radioactive waste. The systems approach is embodied in the presentation. The report is not intended to be an instruction manual; rather, emphasis is placed on understanding the technical requirements and knowing what information and analysis are needed for making informed choices to meet them.

A framework is developed for using the desired site characteristics to locate potentially suitable sites. The scope of efforts necessary for characterizing a site is then described and the range of techniques available for site characterization is identified. Given the natural features of a site, design options for achieving the performance objectives are discussed, as are the operating practices, which must be compatible with the design. Site closure is presented as functioning to preserve the containment and isolation provided at earlier stages of the development and operation of the facility.

1. INTRODUCTION

New land disposal facilities are needed to accommodate the low-level radioactive wastes produced by both commercial and defense activities. Commercial wastes result from nuclear power plants and associated fuel cycle facilities, radioisotope and radiation source industrial users, radiopharmaceutical manufacturers, hospitals and medical schools, universities, and government and private research and development organizations. Commercial low-level wastes are currently disposed of in commercial shallow land burial facilities. Licensure is by the Nuclear Regulatory Commission (under 10 CFR Part 61) or by a state, if the state has qualified as an agreement state under the Atomic Energy Act. Defense wastes result from the production of nuclear weapons and the research and development programs of the U.S. Department of Energy (DOE); this waste is mainly generated and disposed of at DOE facilities. Some contractors performing work for the federal government produce low-level wastes at their own facilities and are required to ship the wastes to DOE facilities for disposal. Disposal of defense wastes is regulated by DOE (under DOE Order 5820) and does not require a license.

In its most elementary form, shallow land burial disposal consists of placing wastes in trenches which may be as deep as 15 m. The wastes are covered with earthen material which provides shielding to reduce the radiation exposure levels, protects the waste from direct exposure to radionuclide mobilization elements such as wind and precipitation, and serves as a barrier against human and biotic intrusion. This disposal method is preferred for low-level radioactive waste because it can be accomplished in a manner that affords occupational safety and protection of public health while maintaining simplicity of operations and relatively low costs. For minimal environmental insult, the buried waste must be sufficiently isolated from the human environment as long as it remains hazardous, and releases of radionuclides from the waste must be controlled to acceptable levels. Experience has shown that sufficient waste isolation and radionuclide containment can be effected by shallow land burial if the proper consideration is given to the interrelationships of the waste, the disposal site, facility design features, and operating practices.

The objective of this report is to provide the proper foundation for development and operation of new shallow land burial disposal facilities. This report is not intended to be an instruction manual that provides all information required to open a shallow land burial site or to select a particular site characterization technique or site design strategy. Rather, the subject matter is covered in sufficient detail so that informed choices can be made. The purpose of this report is to provide a reference guide for use by the DOE and commercial sector personnel involved in management decisions affecting the planning, development, operation, and regulation of shallow land burial facilities. This purpose is accomplished by building on the basis that a successful operation will result from using a systems approach that depends on major keys. These keys to success are identified, related to performance objectives, and followed by a systematic description of procedures and technology for shallow land burial of low-level radioactive waste.

To this end, Chapter 2 discusses the performance objectives that must be achieved and how these performance objectives generate technical considerations for the various phases of development and operation of shallow land burial systems. This chapter establishes the technical basis for site selection and characterization, design, operation, and closure and, thus, provides the key to understanding shallow land burial. Chapter 3 addresses site selection, developing a framework for using the desired site characteristics to locate potentially suitable sites. Chapter 4 describes the scope of efforts necessary for characterizing a site. Emphasis is placed on identifying the range of techniques available for site characterization. Chapter 5 discusses the various design options for achieving the performance objectives for shallow land burial at a particular site, given its natural features. Chapter 6 addresses the operating practices necessary to carry out the technical requirements and design. Finally, Chapter 7 discusses site closure.

2. SYSTEMS APPROACH TO SHALLOW LAND BURIAL

Shallow land burial, when properly conducted, is an acceptable method for the disposal of solid, low-level radioactive waste. In the past, shortcomings in site selection, facility design, and site operations have led to various problems that have required corrective actions or termination of operations. The lessons learned from this collective experience provide the basis for development of goals and objectives to improve the performance of current and future shallow land burial facilities. The successful achievement of these goals and objectives involves numerous environmental and technological interactions, so a systems approach is necessary. This chapter provides an overview of the systems approach and highlights the important factors to be emphasized in the application of shallow land burial technology.

2.1 BACKGROUND

Shallow land burial has been used extensively throughout the United States to dispose of solid, low-level radioactive waste both at major U.S. Department of Energy (DOE) facilities and at commercial facilities. The technology was first developed in the early days of the Manhattan Project during World War II as an extension of the landfill method of operation used for disposal of municipal waste. Contaminated wastes were placed in shallow, unlined trenches and were then covered with earthen material. With this method of disposal, the earthen material provides shielding to reduce the radiation exposure levels, protects the waste from direct exposure to the elements, and serves as a barrier against intrusion and radionuclide migration.

The radiological properties of the waste require that the shallow land burial disposal method provide for a higher degree of containment of radionuclides and isolation of the waste than afforded by conventional sanitary landfill operations. Recognition of this requirement and lessons learned from approximately 40 years of operating experience have resulted in the evolution of disposal operations from simple landfill techniques to currently employed shallow land burial technology. Current technology

provides significantly improved methods for disposal of low-level wastes by use of an integrated systems approach.

Although there are some problems in shallow land burial which are more serious than others and can be directly related to specific site characteristics (e.g., those related to water management), one of the most fundamental lessons learned from examining the performance history of existing sites is that no single, dominant geohydrologic criterion is more critical than others for every site (Fischer and Robertson 1983). It is important to realize that each site and, therefore, each facility is unique. Each site and system requires independent evaluation; appropriate design and operation features must be selected for optimization of specific situations.

Geohydrologic factors were considered in selecting the early U.S. Atomic Energy Commission (AEC) sites, but they were secondary to the criterion that the facilities be located within the boundaries of the AEC (now DOE) site (Fischer and Robertson 1983). Releases of radionuclides from these facilities were not detected because they were small and, in most cases, were overshadowed by the radioactivity in the surface water resulting from direct releases of liquid radioactive effluents. Thus, detectable migration of radionuclides was not anticipated when the first commercial shallow land burial facilities were licensed in the early 1960s. This idealistic expectation was not realized because operating experience demonstrated that absolute containment of radionuclides was not possible using shallow land burial technology, especially in humid environments. Some shallow land burial facilities have not performed as expected; however, no cases have been cited where public health has been adversely affected (Fischer and Robertson 1983).

Many of the previously encountered operational problems can be prevented or mitigated by avoiding those conditions that give rise to problems. For example, the most serious technical problems encountered at shallow land burial sites have been caused by water. Water has come into contact with wastes at a number of DOE and commercial shallow land burial facilities (Jacobs et al. 1980) and has led to migration of radionuclides (Jacobs et al. 1980, Foster 1982, Robertson 1982). The location of the disposal sites, the design of the sites and disposal units, and operating practices have generally contributed to this problem.

Postoperational problems have been encountered where site stability has been compromised after closure of the disposal units. The most common problems have resulted from trench cap subsidence, which facilitated the infiltration of precipitation and surface runoff directly into the disposal trenches. In addition to increasing infiltration, which, in turn, accelerates the migration of radionuclides, subsidence reduces the isolation provided as protection against potential inadvertent intrusion. Some subsidence has occurred at all shallow land burial facilities. The effects range from only small stress cracks at some sites to more serious damage, such as formation of potholes and exposure of waste packages (Jacobs et al. 1980, Robertson 1982). Subsidence arises from a combination of movement of backfill into voids between waste packages, degradation of waste and waste packages, and compaction of the overburden. Eventually, all voids will be filled, but subsidence is accelerated when water percolates through the backfill and washes soil into voids in the waste trench.

2.2 KEYS TO SUCCESS

Shallow land burial is a relatively simple disposal method, for which experience has shown that there are major keys in developing a successful operation. The basis for successful development and operation of a shallow land burial facility is a systems approach, which is outlined schematically in Fig. 2.1. The central features of the systems approach are the interactions of the various phases of site development and the use of experience to further improve site performance.

The overall goals for performance of a shallow land burial facility can be developed into a set of performance objectives (Sect. 2.3). Experience has shown that these objectives cannot be met solely by attention to one phase of site development but that all phases must be understood with respect to their interrelationships and their impacts on overall performance. Thus, the objectives must be further developed into specific technical criteria related to waste characteristics, site characteristics, site design, operating practices, and site closure (Sect. 2.4). These criteria should be used to develop a long-term plan for site development to ensure that appropriate information on both waste and site characteristics is taken into account during site design, development, and operations.

ORNL-DWG 84-8995

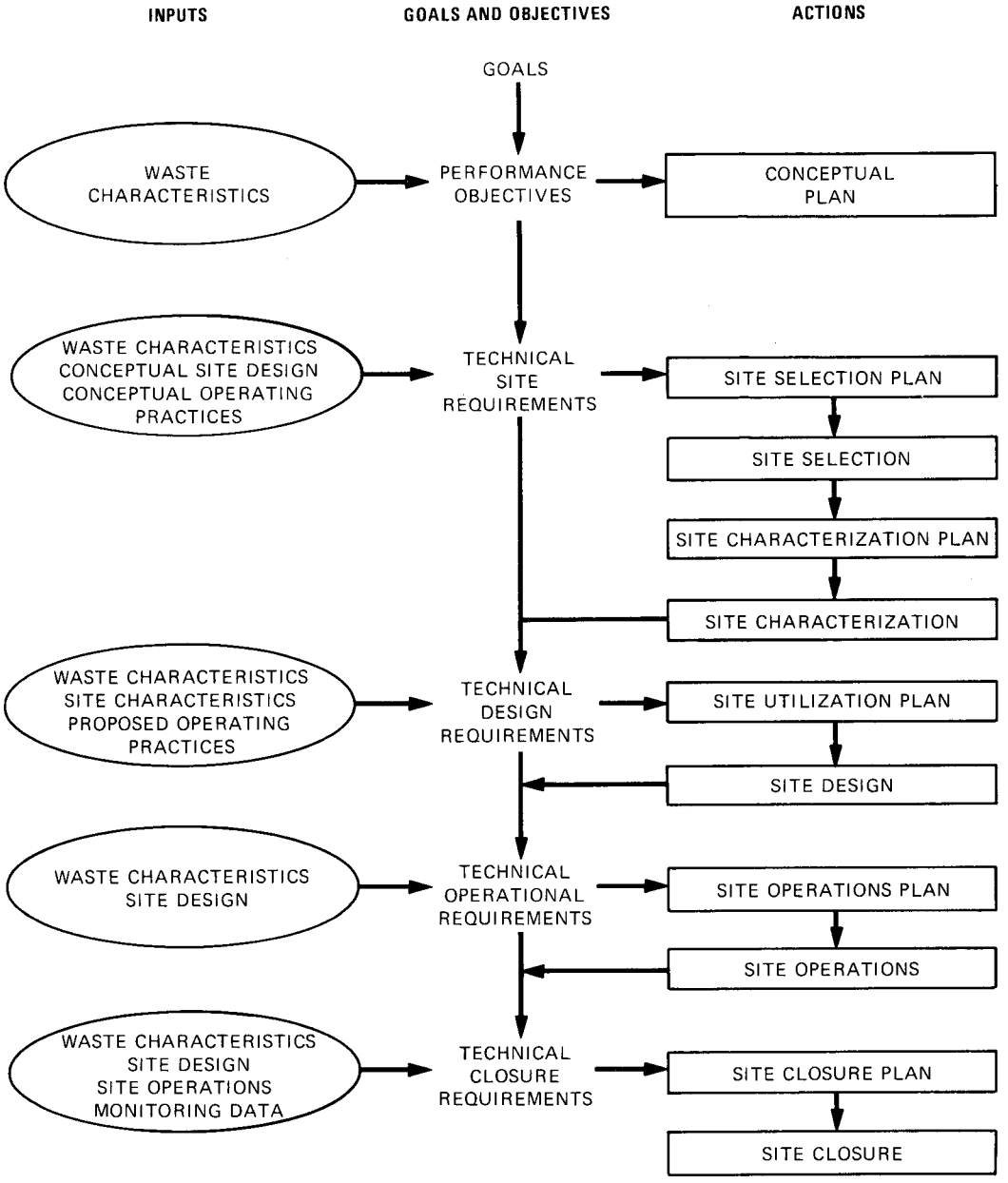

Fig. 2.1. Schematic of a systems approach to shallow land burial.

Design features and operating practices need to be evaluated not only with respect to their effectiveness in achieving the immediate results for which they are targeted, but also for other consequences.

Thus, on the basis of previous experience, the keys to success in shallow land burial are the following:

- o know what to achieve (i.e., develop a comprehensive, but flexible, set of objectives and criteria) (Sect. 2.3);
- o understand how the system will operate (i.e., make a systematic, site-specific performance assessment to describe the interactions of the waste, the site, and the engineered features and to quantify the potential impacts) (Sect. 2.5);
- o plan means to achieve the goals and objectives (i.e., formalize a site-specific plan for site development, operation, and closure) (Sect. 2.6); and
- o learn from experience (i.e., evaluate early site performance and use the results to improve later site operations and to prepare for site stabilization and closure) (Sect. 2.7).

These keys to success are the basis of the discussions that follow and are the foundation for the development of improved shallow land burial technology.

2.3 PERFORMANCE OBJECTIVES

The overall goal of radioactive waste management is to dispose of radioactive wastes in a manner that ensures the continued protection of members of the public and workers at the facility against unacceptable and unnecessary radiation exposure. This goal is reflected by the current regulatory philosophy that it is neither practicable nor necessary to provide absolute containment for low-level radioactive waste. The current approach recommended for management of solid, low-level waste is to use shallow land burial to limit releases of radionuclides to the environment to acceptable levels. Once the waste is disposed of, it must be sufficiently isolated from the human environment for as long as it remains hazardous, and releases of radionuclides from the waste must be minimized and kept as low as reasonably achievable. For shallow land burial, this goal can be more

easily transformed to specific objectives by restating it as four performance objectives. Briefly stated, the performance objectives are the following:

- o minimize radionuclide migration from the disposal units;
- o inhibit biological, especially human, intrusion into the radioactive waste;
- o limit occupational exposures to levels that are as low as reasonably achievable; and
- o stabilize the disposal site such that minimal maintenance is needed after closure.

These performance objectives are embodied in recent regulations for land disposal of low-level radioactive waste (10 CFR Part 61 and DOE Order 5820). The objectives are generic principles that generate technical considerations that must be factored into each phase of development and operation of a shallow land burial facility — that is, from determination of the quantity and characteristics of the waste, to selection of a site and an appropriate facility design, to use of sound operating practices, and, finally, to closure of the facility.

The manner in which the performance objectives generate technical considerations for the various phases of development and operation is illustrated by determining how waste isolation and radionuclide containment may be achieved with shallow land burial. The need to minimize radionuclide migration from the waste (i.e., containment of the radionuclides) may also place constraints on the design, location, and characteristics of the site, as well as on operating practices. Experience has shown that groundwater migration is the principal means of radionuclide movement from waste disposal units. For this reason, effective radionuclide containment requires that the emplaced waste be kept as dry as possible (i.e., avoidance of contact with groundwater and minimization of infiltration of surface water) and that the contact time between the waste and infiltrating water be minimized to inhibit the generation of leachate. This condition requires that the design include provisions for promoting rapid drainage of infiltrating water and eliminating direct contact of the emplaced waste with

groundwater. Also, the operating practices should include provisions for keeping the waste dry prior to and during emplacement into the disposal units. Obviously, the site hydrology has a major influence on radionuclide containment since water is a major pathway for radionuclide migration (Sect. 2.5.3). The extent to which the site is isolated relative to the radionuclide migration pathways determines how effective the containment will be.

The principle of inhibiting inadvertent human intrusion into the emplaced waste (i.e., provision of adequate waste isolation) may place constraints on the design, location, and characteristics of the site relative to the waste characteristics. The half-lives, concentrations, and toxicity of radionuclides contained in the waste determine the time period during which the waste is hazardous and must be isolated. For a given site, engineered features (e.g., inclusion of barriers over the disposal unit) may be necessary to inhibit intrusion into the waste after the site is closed and no longer under institutional control. Moreover, the site would have to be located to minimize the potential for inadvertent intrusion — for example, in areas that are sparsely populated and do not contain potentially exploitable resources. Also, the site would have to be located in an area where geologic processes (e.g., erosion and faulting) could not breach the integrity of the disposal units.

These are but a few of the technical considerations that evolve from the performance objectives. A more detailed treatment is included in Sect. 2.4.

2.4 TECHNICAL CONSIDERATIONS

As discussed in Sect. 2.3, the performance objectives generate technical considerations that must be satisfied across the various phases of facility development and operation. This section summarizes these considerations generically, recognizing that site-specific concerns may alter their significance at any given facility.

2.4.1 Waste Characteristics

Site performance is enhanced significantly by disposing of waste in forms or containers that are stable over long time periods and are not likely to release radionuclides by leaching or degradation. These considerations are derived from the performance objectives aimed at minimizing radionuclide migration from the disposal unit and inhibiting inadvertent intrusion (Sect. 2.3). Structurally unstable waste forms (including waste containers) may result in subsidence of the disposal unit cover due to collapse and/or degradation of the waste (Sect. 2.1). Subsidence reduces the isolation provided by the cover of the disposal unit and facilitates infiltration of precipitation and surface runoff directly into the disposal unit. A structurally stable waste can maintain isolation and inhibit inadvertent intrusion and exposure since the waste will remain recognizable.

Shallow land burial is not suitable for all radioactive wastes. Wastes that are suitable for this disposal method may be defined and classified on the basis of their degradability and the concentrations, half-lives, radiotoxicity, and environmental mobility of radionuclides contained in the waste. The quantity, radiotoxicity, and environmental mobility of the radionuclides in the waste determine the degree to which migration must be controlled. The concentration and radiotoxicity determine the degree of isolation and stability required to protect against intrusion. The half-lives and degradability influence the duration and effectiveness of disposal unit stability. These considerations, in turn, are important in site selection, facility design, facility operation, and site closure. The structural stability requirements for the waste form and packaging depend on the level of radiotoxicity and its persistence. Wastes with low levels of radiotoxicity and/or short half-lives do not require the same degree of stability as wastes with higher or longer lasting levels of radiotoxicity. Wastes with high levels of radiotoxicity that will persist for an extended time must be disposed of in a way that provides additional measures to ensure isolation (e.g., thicker disposal unit covers or intruder barriers). Treatment of waste to convert it to a form suitable for shallow land burial and to enhance its stability is discussed in DOE (1984a). A waste

classification system based on these considerations has been developed for low-level waste generated in the commercial sector (10 CFR Part 61). No such system currently exists for defense-generated waste.

2.4.2 Site Characteristics

Since the site features ultimately determine the long-term isolation of the waste and containment of the leachable radionuclides, a thorough and quantitative understanding of how the features of the site influence its performance is essential. This understanding can serve as a basis for determining if a site is suitable. The performance objectives suggest that a shallow land burial site should be

- amenable to reliable prediction of potential radionuclide migration and capable of being monitored for actual radionuclide movement;
- geologically stable;
- well drained; and
- located to minimize the consequences of site development.

The first consideration results from regulatory requirements of having to predict the long-term performance of the shallow land burial facility and to monitor the facility to determine its compliance with the performance objectives. The site must be geologically and hydrologically simple to ensure successful modeling and monitoring. The second consideration results from the performance objective that the site and disposal units be stabilized so that a minimum of maintenance is required. Should the host geologic formation for the waste be unstable over the long term, this performance objective may not be achievable. The third consideration is derived from the need to keep the waste as dry as practicable to minimize radionuclide migration; a well-drained site is essential to meet this need. The last consideration relates directly to minimizing the potential impacts of radionuclide migration and inhibiting inadvertent intrusion into the waste.

These site suitability considerations are by no means comprehensive. Other technical considerations may be derived from closer inspection of the performance objectives. However, the above considerations can be formulated as criteria for selection of a site with natural features that maximize the probability of successful site performance as described in Chapter 3.

2.4.3 Design

The site should be designed to ensure fulfillment of the performance objectives by optimal use of its natural features and incorporation of engineered features as needed. To minimize radionuclide migration at a given site, the design should incorporate features to keep the waste dry and to minimize the contact time between the waste and water. Such features should therefore function to direct surface water away from the disposal units, to rapidly drain away incident precipitation and surface water runon, to promote rapid drainage of infiltrating water, and to minimize direct contact of emplaced waste with groundwater. Depending on the site and waste characteristics, engineered features such as intruder barriers may be required to inhibit inadvertent intrusion. Other design features should enhance the stability of the disposal units and site.

2.4.4 Operating Practices

Operations are directed toward disposing of wastes according to design requirements and monitoring to confirm site performance and to determine compliance with applicable regulations. Unforeseen problems must be identified and corrected to attain the performance objectives. Experience acquired during early operation should be used to enhance the design and should be applied to future operations. Close stacking of waste packages to reduce void volume, careful backfilling to reduce voids, and compaction of backfill and overburden are common techniques for reducing subsidence and enhancing performance. Specifications for these procedures should be included in the design. Monitoring of shallow land burial facilities is discussed in Environmental Monitoring for Low-Level Waste Disposal Sites (DOE 1983a).

2.4.5 Closure

Past experience has shown that closure and postclosure activities can be time consuming and costly at sites that have not adhered to sound design and operating practices. Consequently, the present emphasis in shallow land burial is on promoting stability and containment through good design and successful operations to minimize the need for corrective measures. Corrective measures for shallow land burial are discussed in DOE (1984b). The development of closure and postclosure procedures that minimize maintenance is an evolutionary process that is initiated at the early stages of site development. As knowledge and experience are gained during site development, closure and postclosure plans and procedures may be modified to optimize site stability while minimizing the need for maintenance.

2.5 PERFORMANCE ASSESSMENT

A major key to success in shallow land burial, as identified in Sect. 2.2, is to understand completely how the system and its components work and to make a performance assessment. This assessment is a systematic evaluation of the predicted performance of the facility relative to the performance objectives (Sect. 2.3). As such, the performance assessment should include evaluations of the likelihood and consequences of a breach of isolation, prediction of the long-term stability of the site, and a prediction of radionuclide migration via major pathways. Detailed information on the characteristics of the site and its contiguous area, the site design, and the operating procedures are required inputs for the assessment.

2.5.1 Waste Isolation

The waste disposal units must keep the waste isolated from intrusion for as long as the waste remains hazardous. Breaches in waste isolation can be caused by human intrusion, biologic intrusion, and geologic processes such as erosion of the cover material. Such breaches can lead to increased

infiltration of water into the waste and to eventual radionuclide migration in groundwater. The potential consequences of increased radionuclide migration that may result from a breach are factored into the pathways analysis (Sect. 2.5.3).

The first barrier to intrusion is the natural stability of the site. Thus, site location is of primary importance. In cases where the concentrations and half-lives of the radionuclides require protection against inadvertent intrusion for long periods of time after institutional controls have ceased, design features, such as thicker disposal unit covers or long-lasting physical barriers against intrusion, may be necessary. There is no formal analysis that will provide quantitative predictions of the degree of isolation the site will provide over long time periods with certainty, but the radiological characteristics of the waste to be disposed of at the site can be reviewed to determine how effective the isolation should be for adequate protection.

2.5.2 Disposal Site Stability

The disposal units should remain sufficiently stable during the time that the waste is hazardous so that the site will continue to provide containment and isolation. There are a number of environmental processes that can impair site stability, such as water and wind erosion, surface geologic processes, and seismic events.

In assessing site stability, the content of long-lived radionuclides in the waste is important to know in order to determine the length of time the site must remain stable. In addition, the physical condition of the waste and waste packages is important for determining the likelihood of trench subsidence (Sect. 2.1). Long-term site stability is only achievable by proper site selection and design.

2.5.3 Radionuclide Migration

To avoid situations where the projected rate of radionuclide movement would lead to violation of performance objectives, it is necessary to identify, understand, and quantify the critical radionuclide transport

processes. The primary interest is the degree of containment provided by the site. A radionuclide pathways analysis is required for this purpose.

The pathways analysis provides the basis for predicting site performance and for design of the environmental monitoring program. The pathways analysis identifies potentially significant pathways of migration, analyzes the doses to humans, and identifies those locations that are most suitable for sampling and monitoring stations. Refinement and verification of the pathways analysis during the operating phase should greatly increase the credibility of projected performance after the site is closed.

After wastes have been placed in the disposal units, the geologic formation is the primary barrier to radionuclide migration. Seismic events can result in some direct movement of radioactive materials, but in the event of such occurrences, a greater amount of movement would probably arise from secondary transport by water and/or air. These initial modes of transport may enter into a number of secondary pathways that are interconnected. The analysis should consider each specific pathway and the interconnections between the pathways. A diagram showing the major pathways and their interconnections is shown in Fig. 2.2.

All reasonable scenarios that may affect the pathways analysis should be evaluated. The range of scenarios should include all of the significant situations to be analyzed and should realistically describe the range of conditions likely to be encountered. Care should be taken to avoid emphasizing extreme conditions that are unrealistic. For example, scenarios involving the use of groundwater for drinking or irrigation should be restricted to situations that can be supplied by the projected production rate for a well in that particular formation. Scenarios involving the production and consumption of foodstuffs should reflect actual local production rates. The scenarios should describe the source term, the specific pathways of radionuclide migration, the interconnection between specific pathways, the locations of receptors or targets of exposure, and the modes and duration of exposure. The various modes of radiation exposure to members of the public (Fig. 2.2) include

ORNL–DWG 84-9096

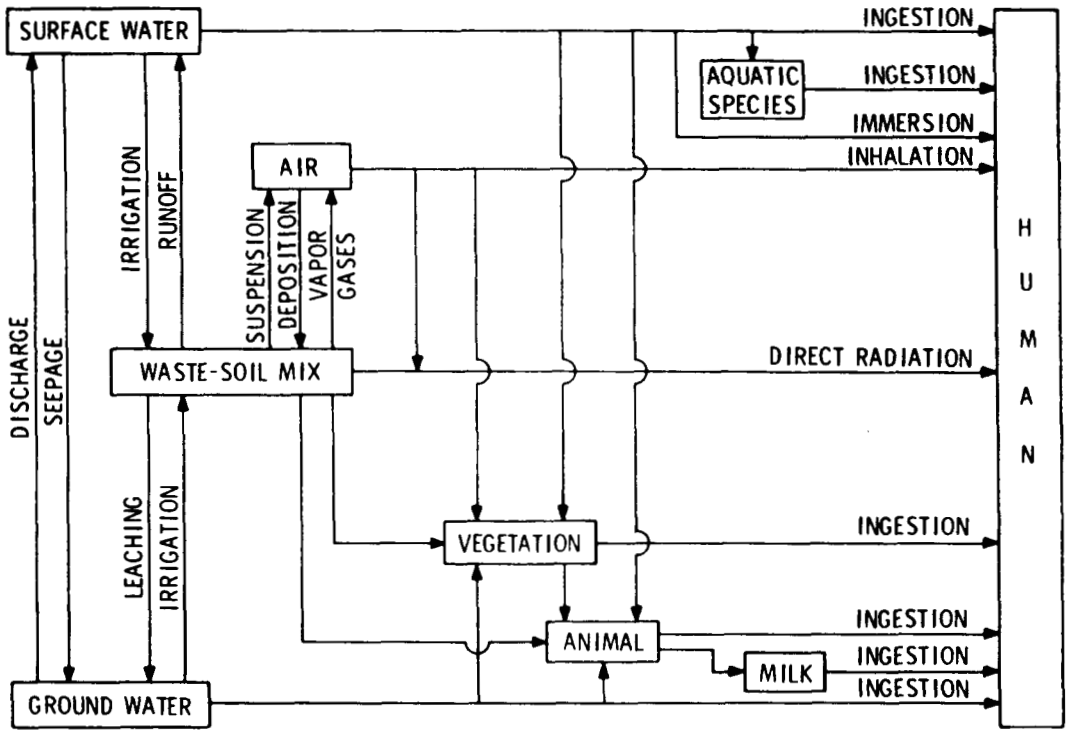

Fig. 2.2. Model pathway diagram for a low-level waste burial facility.

- o direct external radiation from contaminated soil, water, sediments, and atmospheric plumes;
- o consumption of contaminated water;
- o submersion in contaminated air or water;
- o inhalation of contaminated air; and
- o ingestion of contaminated foods.

2.5.3.1 Groundwater

Water that enters the disposal unit may come into contact with the buried waste and either dissolve or suspend radionuclides and thereby initiate the migration process. The degree of leaching depends on the solubility of the radionuclides and the contact time between the water and waste. To minimize the generation of the leachate, the duration of contact should be kept as short as practicable.

Assessment of radionuclide movement by groundwater should begin with a description of the specific radionuclide content of the wastes that will be buried at the site. The concentrations of radionuclides within the various disposal units are unlikely to be uniform, but the average composition should be adequate because the inventory, rather than the concentrations at a specific point, is more important for assessment of the extent of radionuclide migration.

Migration can occur in either unsaturated or saturated zones. If the waste is placed above the water table, the initial migration will be into the unsaturated zone. Water tends to flow in the path of least resistance, so the rates of flow will be greatest through highly permeable zones, such as sand lenses, cracks, crevices, bedding planes, or the interface between the undisturbed formation and backfill.

A water budget analysis is a convenient, simplified way to estimate the quantities of precipitation, evapotranspiration, runoff, and infiltration at a site (Blumberg et al. 1983). It also provides a means for checking measured and estimated hydrologic parameters for reasonableness and consistency. A general description of the paths of groundwater movement can be obtained by mapping the piezometric surface. This information, combined with a water budget analysis, can be used to derive a general quantitative description of the directions and rates of groundwater movement. If there is no significant movement of groundwater, the rate of radionuclide migration is limited by molecular or ionic diffusion and is quite slow. Radionuclides move slower than groundwater because of the interaction between the radionuclides and the geologic formation. The major interaction is ion exchange, which is a reversible process. Normally, the solid matrix of the geologic formation does not move, and the fraction of the radionuclides that are adsorbed by the solids are restrained from migration. Thus, estimates of radionuclide migration can be made by combining models for groundwater flow with factors for radionuclide retardation. Several such models have been developed (e.g., Oster 1982).

Radionuclides will not migrate with uniform velocity, because of variations in geochemical and geophysical properties of the soil. The distance that radionuclides move and contaminate the local groundwater depends on the rate of water movement, the degree of interaction between the radionuclide and soil minerals, and the half-life of the radionuclide.

Local contamination of groundwater is not likely to result in significant levels of radiation exposure during the operational phase of a site for a properly operated facility. The areas of significant groundwater contamination would likely be within the boundary of the site, so direct use of contaminated groundwater for drinking or irrigation would not occur. Direct radiation exposure from the contaminated zone would be significant only from gamma-emitting radionuclides and then only if the contamination is very near the surface. However, the disposed waste may retain some of its radioactivity for long periods of time. The predictions of radionuclide migration must take this into account.

2.5.3.2 Surface Water

Surface water is not likely to come into direct contact with radioactive waste after it has been buried and the trench has been covered. However, precipitation and surface runoff can leach uncovered waste or contaminated areas of the ground surface. Surface water contamination may also result from seeps of contaminated groundwater to the surface or by contaminated groundwater recharge of surface streams.

Surface water flow rates are required for estimating the concentrations of radionuclides in downstream surface water due to releases from the site. For shallow land burial, the initial mixing zone is not likely to be of major interest. Releases of radionuclides, especially those due to erosion, are likely to be highest at periods of high runoff during and immediately following storms; hence, monthly or weekly averages may be useful in assessing site performance.

Radionuclides may be removed from streams and deposited on the stream bed through interaction with suspended sediments and subsequent deposition or by direct interaction with bottom sediments. The degree of interaction with sediments can be estimated if the distribution coefficients and sediment loadings are known, but the degree of retardation is small compared to that in groundwater systems.

2.5.3.3 Atmosphere

Few, if any, radioactive gases are accepted for disposal at shallow land burial facilities. However, the waste may contain radionuclides, such as tritium, iodine, radon, or carbon, which may have significant vapor pressures or (for carbon) may form gaseous compounds. Permeation of gases through the ground is generally limited by diffusion.

Airborne particulates may be released during excavation or during periods of high winds. When gaseous radionuclides diffuse to the land surface, the rate at which they are dispersed in the atmosphere is a function of atmospheric stability and wind speed. Radionuclides may be removed from the atmosphere by gravimetric settling of particulates, by rainout or washout, or by impingement of the air mass with the ground surface.

There are several potential modes of exposure arising from releases of radioactive materials to the atmosphere. Persons downwind may be exposed internally by inhalation of the contaminated air or externally by immersion in the passing plume, by direct radiation from an overhead or nearby plume, or by direct radiation from surfaces onto which radioactive materials have deposited. Additional exposures result from secondary transport and exposure pathways, such as through contamintion of water and foodstuffs. The extent of the exposures is determined by the population distribution and local land use patterns.

2.5.3.4 Summary

The pathways analysis should provide sufficient detail with respect to rates and directions of contaminant movement so that it can be used as a basis for determining site acceptability and designing the environmental monitoring program. As monitoring results are obtained during site operations, they should be compared with predictions and used to refine the next stage of predictions.

2.6 PLANNING

A key to the systems approach to a shallow land burial facility, as identified in Sect. 2.2, is to integrate the planning for the various activities, that is, site selection, site design and development, operations, and closure (Fig. 2.1). The standard axiom of quality control applies for each activity -- "It is more cost-effective to do it right the first time than to have to correct mistakes later."

A long-range plan should be developed to highlight major requirements and decision points and to specify information needed in decision making. In developing the plan, one should define and establish the scope of the task; identify design alternatives; evaluate the various alternatives with respect to performance, long-term maintenance, ease of operations, cost, and compatibility; and recommend the best features for the specific situation.

A long-range plan can help identify the steps required to bring a facility into operation and can serve as a road map for facility development. General long-range plans can be used as a tool in developing site-specific plans. Figure 2.3 is a typical outline of a long-range plan for establishing a new shallow land burial facility. Significant planning, time, and funds are needed to develop new disposal facilities. The minimum time from initiation of a feasibility study to actual operation of the facility may be of the order of four or five years. The schedule may vary significantly for a specific site, depending on site-specific anomalies, difficulties in gathering data, public hearings, and legal challenges (DOE 1983b).

The plan should outline the overall development of the site, with a time schedule as well as a list of the sequence in which the various areas within the site will be used. During site operations, new disposal units will be developed at the same time other units are being filled and closed. It is important that the activity in one operation does not interfere with the others. It is especially important that construction of a new disposal unit does not reduce the stability of units that are being or have been filled. Scheduling of construction, operation, and disposal unit closure will allow more efficient use of personnel and equipment. For example, if the scheduling is appropriate, earthen material excavated in constructing a new disposal unit can be used as backfill or as surcharge for an adjacent

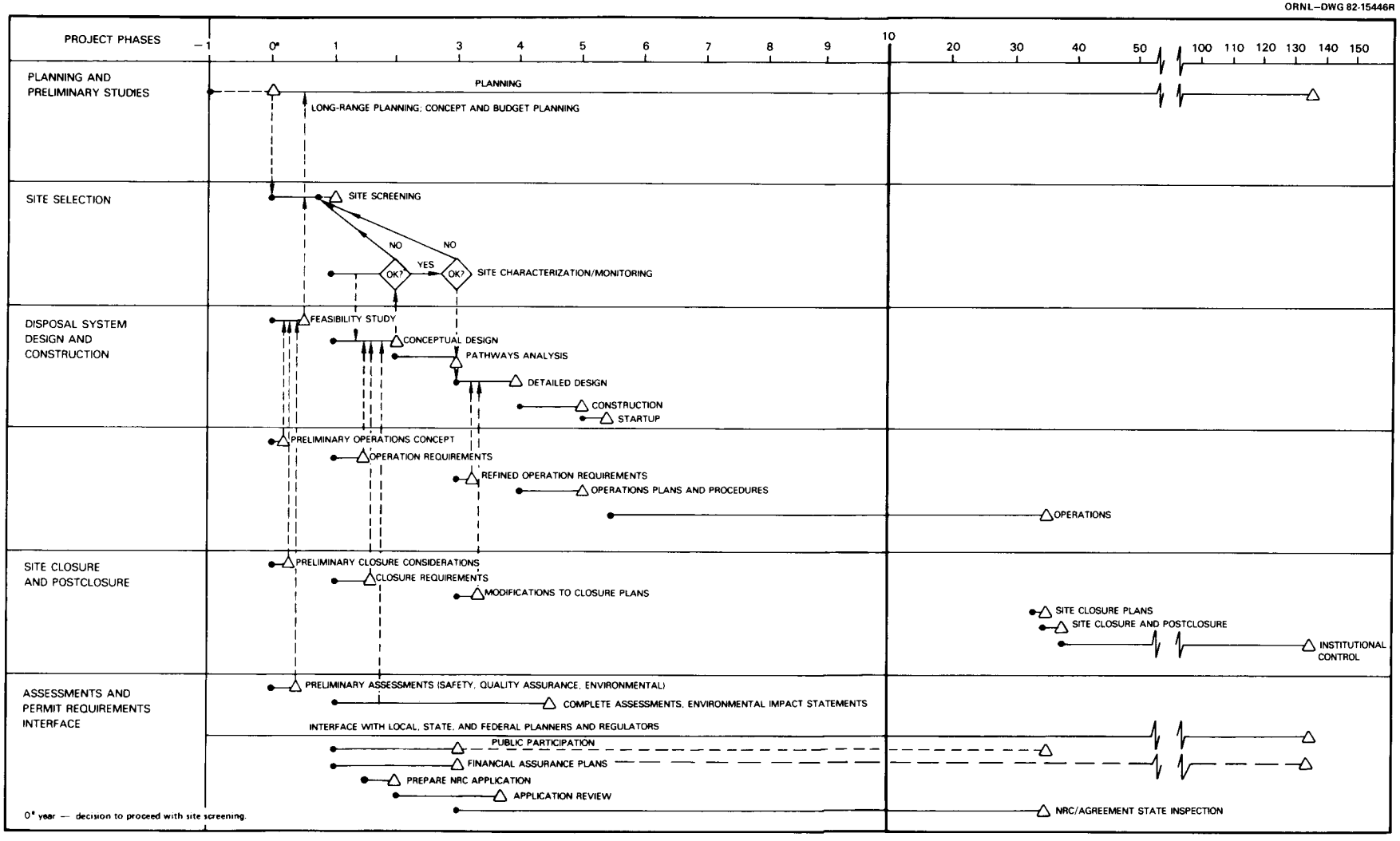

Fig. 2.3. Long-range plan for a new shallow land burial facility for low-level radioactive waste.

filled unit. The long-range plan should coordinate the three phases so that action taken during development and operation of a disposal unit facilitates its closure and so that closure of individual disposal units is consistent with final site closure. The needs for closure and postclosure should be considered during preliminary design to enhance long-term stability and waste containment and to minimize maintenance requirements after the site is closed (Lutton et al. 1982).

2.7 LEARNING FROM EXPERIENCE

The plans prepared as part of the systems approach become useful in achieving the performance objectives by providing the basis for periodic review and comparison to experience gained in early site operations. The improved information on the site characteristics and operational performance, when reviewed against the earlier plans, can be used to further improve site performance. By adhering to the systems approach throughout site development and closure, the performance of the site should be documented well enough to credibly project the future performance of the site through the time during which the waste remains hazardous.

REFERENCES FOR CHAPTER 2

Blumberg, R. B., et al., 1983, GCEP Waste Pathways Analysis Study, K/D-5375, Oak Ridge Gaseous Diffusion Plant, Oak Ridge, Tenn.

DOE (U.S. Department of Energy), 1983a, Environmental Monitoring for Low-Level Waste Disposal Sites, DOE/LLW-13Tg, National Low-Level Radioactive Waste Management Program, EG&G, Idaho Falls, Idaho.

DOE (U.S. Department of Energy), 1983b, Managing Low-Level Radioactive Wastes: A Proposed Approach, DOE/LLW-9, National Low-Level Radioactive Waste Management Program, EG&G, Idaho Falls, Idaho.

DOE (U.S. Department of Energy), 1984a, Low-Level Radioactive Waste Treatment Technology, DOE/LLW-13Tc, National Low-Level Radioactive Waste Management Program, EG&G, Idaho Falls, Idaho.

DOE (U.S. Department of Energy), 1984b, Corrective Measures Technology for Shallow Land Burial, DOE/LLW-13Te, National Low-Level Radioactive Waste Management Program, EG&G, Idaho Falls, Idaho.

Fischer, J. N., and J. B. Robertson, 1983, "Geohydrologic Problems at Low-Level Radioactive Waste Disposal Sites in the United States of America," Proceedings of the International Conferene on Radioactive Waste Management, Seattle, Wash., 16-20 May 1983.

Foster, J. B., 1982, "Lessons Learned in a Hydrogeological Case at Sheffield, Illinois," Proceedings of the Symposium on Low-Level Waste Disposal: Site Characterization and Monitoring, pp. 237-244, NUREG/CP-0028, Vol. 2, U.S. Nuclear Regulatory Commission.

Jacobs, D. G., J. S. Epler, and R. R. Rose, 1980, Identification of Technical Problems Encountered in the Shallow Land Burial of Low-Level Radioactive Wastes, ORNL/SUB-80/13619/1, prepared by Evaluation Research Corporation for Oak Ridge National Laboratory, Oak Ridge, Tenn.

Lutton, R. J., et al., 1982, Parameters for Characterizing Sites for Disposal of Low-Level Radioactive Wastes, NRC FIN No. B 7324-1, prepared by U.S. Army Engineer Waterways Experiment Station, Vicksburg, Miss., for U.S. Nuclear Regulatory Commission.

Oster, C. A., 1982, Review of Ground-Water Flow and Transport Models in the Unsaturated Zone, PNL-4427, Pacific Northwest Laboratory, Richland, Wash.

Robertson, J. B., 1982, "Geohydrologic Problems at Low-Level Radioactive Waste Disposal Sites," Proceedings of the Symposium on Low-Level Waste Disposal: Site-Suitability Requirements, pp. 135-148, NUREG/CP-0028, Vol. 1, U.S. Nuclear Regulatory Commission.

3. SITE SELECTION

Site characteristics have a major influence on the long-term performance of a shallow land burial facility. Thus, site selection is an important step in the development of the facility. The performance objectives (Sect. 2.3) provide a basis for developing criteria that can be used to select a potentially suitable site. The site can be selected with reconnaissance-level data.* However, detailed evaluations, including characterization of the site and contiguous area (Chapter 4) and a performance assessment (Sect. 2.5), are required to verify the suitability of the site. This chapter discusses the objectives to be achieved in site selection and the process and information needs for selecting a site.

3.1 OBJECTIVES

An acceptable site for a shallow land burial facility must have several attributes to meet the performance objectives for disposal of low-level radioactive waste. The site should be geologically and hydrologically simple, geologically stable, well drained, and located to minimize the consequences of site operations (Sect. 2.4.2). These broad attributes can be transformed into specific criteria for use in selecting shallow land burial sites. For each attribute, the salient site features that form the basis of the site-selection criteria are as follows:

- o Geologically and hydrologically simple. The long-term performance of a shallow land burial site must be predictable and capable of being monitored and characterized. This can be achieved only if the site is geohydrologically simple. For this purpose, the site should
  - have thick, extensive, horizontal stratigraphy;

---

*Reconnaissance-level data consist of information that is available from the open literature, published or unpublished reports, existing records, authoritative sources, or information that can be obtained by brief field surveys performed by qualified experts. It does not include information that is obtained by on-site monitoring programs or studies.

- be free from serious folding, fracturing, and solution cavities;
- be reasonably homogeneous with respect to geohydrologic properties; and
- have gentle topography.

o Geologically stable. The site must be geologically stable over the period that the waste is hazardous. It must continue to contain the waste from release to the environment and isolate the waste from inadvertent intrusion to the extent practicable. For this purpose the site should:

- be free from frequent and severe tectonic events;
- be free from frequent and severe geologic processes such as erosion, slumping, and mass wasting; and
- have desirable geotechnical properties that will reduce rapid consolidation of backfill and degradation of disposal unit covers.

o Well drained. The site should be well drained to minimize the contact of water with the waste. Water transport across the site on the surface or through the subsurface should be as limited as practicable. Any water entering the site should drain as quickly as possible. For this purpose, the site should:

- have no areas of flooding or frequent ponding;
- have a minimal upstream drainage area;
- be located so as to avoid wetlands and subsurface discharges to the surface near the disposal area; and
- have soils with a thick unsaturated zone.

o Located to minimize the consequences of site operation, closure, and postclosure. The impacts of site development should be minimized to the extent practicable. Both present and future developments must be considered in satisfying this objective. For this purpose, the site should:

- be distant from population centers and areas of rapid growth;
- be in an area where nearby facilities or activities are not likely to impair site performance or monitoring capability;
- avoid areas where operations would affect national or state parks, wildlife areas, or other protected areas; and
- avoid areas of known natural resources that could be exploited.

The above site features are broad and restrictive because of the important role they play in determining site performance. Many of these

features are incorporated in regulations as minimum site-suitability requirements (10 CFR Part 61) or site criteria (DOE Order 5820) for land burial of low-level radioactive waste. Obviously, not all of these features are absolutely required since undesirable site features, in some instances, can be remedied with engineered features. No attempt is made here to list specific criteria for site selection; the applicable regulations should be reviewed for specific requirements.

3.2 SITE SELECTION PROCESS

A formal site selection process for a shallow land burial facility may be formulated with three levels of consideration: (1) the region is screened for suitable areas, (2) the areas are screened for candidate sites on a more detailed scale, and (3) the candidate sites are screened to yield a preferred site (Fig. 3.1). Each step progresses to a smaller geographic unit and involves more detailed information. This process makes use of reconnaissance-level data, which may include brief surveys by qualified experts. The value of a visit to candidate sites cannot be overstated, because a site visit is the most cost-effective tool available for gathering informtion. In some cases, a limited field investigation may be required to identify a preferred site. Screening factors for each level of consideration are based on site criteria that specify minimum requirements for site suitability (Sect. 3.1).

In the site selection process, the region of interest is established first; it may be a state, a compact of states, or another geographical unit (e.g., a Department of Energy reservation) that needs a disposal site. Areas within the region of interest with the fewest deficiencies that could inhibit site development are identified for further evaluation. Areas that are flood prone or have high densities of faults, fractures, and solution cavities that may be too complex for reliable geohydrological modeling should be excluded at the area screening stage. Other exclusionary factors may also be used at this stage of screening (DOE 1983).

Candidate sites identified within suitable areas are screened to determine the site with the greatest potential for development of a shallow

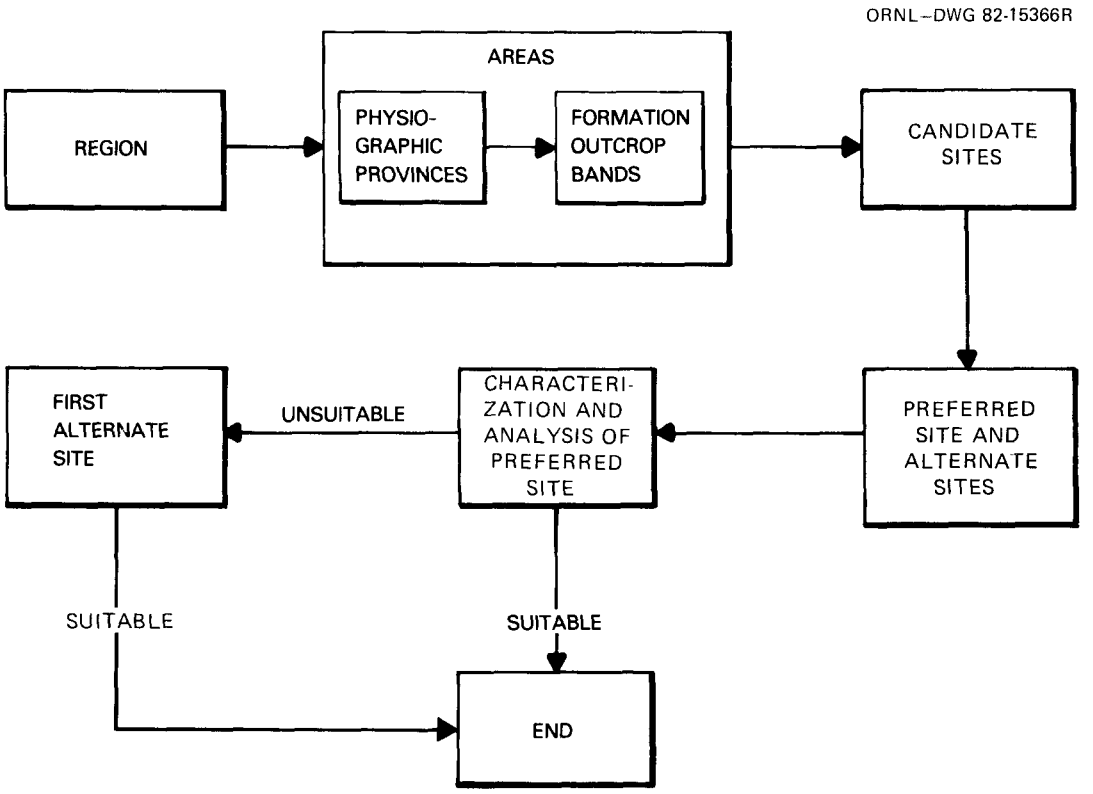

Fig. 3.1. The schematic representation of the site selection process.

land burial facility (i.e., the preferred site). This stage of the site selection process requires more detailed information on and consideration of all the site features essential to achievement of the performance objectives for shallow land burial (Sect. 3.1). Brief field investigations may be necessary to consider other factors such as economics and engineering (Lee et al. 1983).

A methodology is essential to effectively select a satisfactory site for a given region of interest. The set of procedures by which the site selection process is conducted must be rationally organized to produce defensible results. Every site selection process, formal or informal, combines subjective judgments with objective analyses. Several such methodologies have been developed (Lee et al. 1983, DOE 1983, Rogers et al. 1982, and McBrayer et al. 1981). While the methodologies differ in detail, they all rely on the use of reconnaissance information. In addition, the use of experts to evaluate the information is necessary to obtain defensible results.

3.3 INFORMATION NEEDS

The information needs and information sources for site screening are derived from the objectives discussed in Sect. 3.1. These information needs may be grouped into topical subjects that correspond to the disciplinary expertise needed for site selection. The information needs and associated information sources for site selection are summarized in Table 3.1 and briefly discussed below.

The site selection process is performed with the use of readily available information. Complete or uniform information is not likely to be available for all of the candidate sites. Considerable judgement by the experts involved in site selection is needed to select a preferred site that is defensible and that will likely be acceptable for a shallow land burial facility.

For some sites, considerably more data will be available than indicated in Table 3.1. The converse will often be true for other sites within the same site selection study. Site reconnaissance may assist in equalizing the uneven data base; however, in some cases, a limited geohydrologic investigation may be necessary before reasoned decisions can be made. The use of reconnaissance information for selecting a low-level waste disposal site is described in Lee et al. (1983) and DOE (1983).

3.3.1 Hydrology

The hydrologic performance of a site contributes significantly to its overall performance because hydrologic transport is the probable pathway for radionuclide migration for most sites. At the area-wide screening stage of site selection, the focus of interest should be on watershed behavior and water-use patterns. At later stages, emphasis should be placed on more detailed hydrologic parameters.

The major surface water features in the region of interest should be described. Water availability and use in the study region should be specified as completely as possible. Surface water data are used to identify floodplain and wetland areas for exclusion from site studies and to determine the characteristics of existing surface water use. The selected

Table 3.1. Information needs and sources for site screening objectives

Topical area	Objective	Information needs	Information sources
Geology			
Stratigraphy and structure	Site should be geologically simple to allow reliable prediction of long-term performance	Lithology; stratigraphic heterogeneity; presence of folds, faults, solution cavities, and fractures; soil thickness; locations of water-bearing zones; topography	Site visit, U.S. Geological Survey, state geological surveys, Agricultural Stabilization and Conservation Service, U.S. Forest Service, U.S. Department of Agriculture, American Geology Institute, Bureau of Land Management
Geologic hazards	Site must remain stable over the period that waste is of radiological concern	Erosion potential; landslide potential; mass wasting, slumping, and subsidence	Site visit, U.S. Geological Survey, state geological surveys, Soil Conservation Service
Economic resources	Site should be located to minimize the undesirable consequences of operation	Presence of geologic resources and reserves, existing and abandoned mines, existing and abandoned oil and gas wells, exploratory wells	State geological surveys, oil and gas commissions, state water resources agencies, U.S. Bureau of Mines and Geology
Tectonism	Site should be located where tectonic processes will not compromise site performance or stability	Seismic and volcanic activity	National Bureau of Standards, U.S. Geological Survey, state geological surveys
Hydrology			
Surface water	Site should be well drained, be free of flooding, and have minimal upstream drainage area	Surface water resources, wetlands floodplains, water availability, water use, stream flows, site drainage, runoff infiltration, water budget	Site visit, U.S. Geological Survey, U.S. Army Corps of Engineers, environmental impact statements, Soil Conservation Service, U.S. Environmental Protection Agency, American Water Works Association, Housing and Urban Development, state water resources agencies
Groundwater	Site should allow waste to be buried where groundwater intrusion will not occur and allow for reliable prediction of long-term performance	Aquifer characteristics and locations, unsaturated soil thickness, groundwater discharge to surface, groundwater availability and use	Site visit, U.S. Geological Survey, U.S. Environmental Protection Agency, state water resources agencies, environmental impact statements, American Water Works Association, National Water Well Association

Table 3.1. (continued)

Topical area	Objective	Information needs	Information sources
Water quality	Site should allow reliable prediction of long-term performance, and monitoring of site performance should not be masked by nearby facilities	Quality of surface water resources quality of aquifers beneath site presence of radionuclides in water resources	U.S. Geological Survey, U.S. Environmental Protection Agency, U.S. Department of Energy, U.S. Nuclear Regulatory Commission, state water resources agencies, state geological surveys
Meteorology	Site performance should not be jeopardized by wind, precipitation, or other meteorological events	Precipitation, snowfall, maximum events, wind speed, wind gusts, temperature, evaporation, hurricanes, and tornadoes	National Oceanic and Atmospheric Administration
Ecology	Endangered species, unique and valuable habitats, and wetlands should not be present in the site area	Presence of endangered species, unique or valuable habitats, and wetlands	Site visit, state and local conservation organizations, U.S. Fish and Wildlife Service
Socioeconomics	Site should allow unrestricted human use beyond site boundary for the present and future and have access to existing infrastracture	Present and projected land use and population and availability of transportation routes and and utilities	State and local governments, state and local planning commissions, U.S. Department of Commerce

sites should be well drained and free of flooding or ponding and have minimal upstream drainage areas.

Groundwater is a potentially important pathway for the transport of radionuclides. Consequently, the extensive or potential use of groundwater in an area as a personal or public drinking water supply could limit the suitability of the area for shallow land burial. Aquifers in the region should be described with respect to location, depth, areal extent, and saturated thickness. Sites should be selected where the potential for groundwater transport of radionuclides and the potential for human consumption of groundwater are minimized.

3.3.2 Geology

Geologic characteristics play a dominant role in determining whether the groundwater flow system can be reliably predicted, in evaluating the potential for long-term stability of the site, and in estimating the likelihood of inadvertent intrusion into the waste. The predictability of the groundwater flow system is largely a function of the geologic complexity of a site. The long-term stability of a site depends on the incidence and intensity of surface geologic processes such as erosion, landslides, and slumping and on tectonic activity. Past mineral exploitation and future economic resources are important considerations in the site selection process because the development of resources may lead to conflicting land use or to inadvertent intrusion into a waste disposal site after institutional controls have been removed. Past mining and minerals exploration activities may also affect the long-term stability (through tunnel collapse) and predictability of groundwater flow (groundwater pathways through abandoned mines or boreholes).

Areas should also be avoided where mass wasting occurs with enough frequency or extent to significantly affect the ability of a disposal site to meet the performance objectives. The effects of these surface processes may be correctable with design features. Sites that have simple structure, thick unsaturated soils, and uniform characteristics should be selected.

3.3.3 Meteorology

Meteorological information is useful to determine the erosion or flooding potential due to extreme weather conditions such as thunderstorms or hurricanes. The typical reconnaissance-level data used for site selection are precipitation, evaporation, winds, and temperature.

3.3.4 Ecology

The primary purpose of obtaining ecological information during site selection is to ensure that no particularly valuable biotic resource would be lost or seriously affected as a result of development of a shallow land burial facility. The most significant potential ecological constraint on site selection is the presence of a species listed by the federal government as threatened or endangered (USFWS 1980). Also, the conservation of unique or rare plant communities and unusually important wildlife habitats could be significant in site selection.

3.3.5 Land Use and Socioeconomics

The development of a shallow land burial facility should not have an adverse impact on land use and socioeconomics. Information is needed to determine whether or not economically significant natural resources might affect or be affected by the shallow land burial facility. Sites should be selected with low population density and limited anticipated population growth. Use of the site should neither conflict with land-use activities involving current or anticipated development nor jeopardize valued historic sites.

REFERENCES FOR CHAPTER 3

DOE (U.S. Department of Energy), 1983, A Process for Locating Shallow Land Burial Sites for Low-Level Radioactive Waste, DOE/LLW-16T, National Low-Level Radioactive Waste Management Program, EG&G, Idaho Falls, Idaho.

Lee, D. W., R. H. Ketelle, and L. H. Stinton, 1983, Use of DOE Site Selection Criteria for Screening Low-Level Waste Disposal Sites on the Oak Ridge Reservation, ORNL/TM-8717, Oak Ridge National Laboratory, Oak Ridge, Tenn.

McBrayer, J. F., et al., 1981, "Identifying Alternatives at a Reconnaissance Level," EIA Review 2(2), 190-95.

Rogers, V. C., M. W. Grant, and A. A. Sutherland, 1982, Low-Level Waste Disposal Site Performance Assessment with the RQ/PQ Methodology, EPRI-NP-2665, Electric Power Research Institute, Palo Alto, Calif.

USFWS (U.S. Fish and Wildlife Service), 1980, "Republication of the Lists of Endangered and Threatened Species and Correction of Technical Errors in Final Rules," Fed. Regist. 45(99), 33768-81.

4. SITE CHARACTERIZATION

Detailed field investigations are required to define the site characteristics affecting the interactions between the disposal site and its surroundings, the isolation of the waste, and the long-term stability for the disposal site. These investigations (or site characterization studies) are performed after selection of a preferred site for a shallow land burial facility (Chapter 3). This chapter discusses the specific objectives of site characterization and the methodology and methods for acquiring the site characterization data.

4.1 OBJECTIVES

A potentially suitable (or preferred) site for a shallow land burial facility is identified during site selection with the use of readily available information, including that obtained from brief field surveys. However, extensive characterization studies of the site are required to verify its suitability. To make this determination, site characterization has the specific objectives of providing information needed for: demonstrating that the minimum site features (Sect. 3.1) will be met, the performance assessment (pathways analysis), the facility design, and the preparation of an environmental impact statement, if appropriate. Much of the technical information needed for these specific objectives overlaps. Preliminary information obtained during the site selection activity (Sect. 3.3) and the technical considerations generated by the performance objectives (Sect. 2.3) are used to plan the scope of site characterization investigations.

The minimum features necessary for achievement of the performance objectives for a shallow land burial site result from the site having to be geologically and hydrologically simple, geologically stable, well drained, and located to minimize the consequences of site operations (Sect. 3.1). As a minimum, the site characterization studies should provide specific information to determine

- the geologic complexity, stratigraphy, and lithology of the strata underlying the site;

- the presence of any natural resources in the site area;
- the locations of the 100-year floodplain, wetlands, and areas of frequent ponding in the site area;
- the location of upstream drainage areas and the site drainage network;
- the locations of aquifers and the characteristics of the aquifers and of the unsaturated zone;
- the locations of groundwater discharges to the surface in the site area; and
- the weathering, erosion, and stability characteristics of site soils.

The pathways analysis (Sect. 2.5.3) requires site-specific data to provide long-term predictions of radionuclide migration resulting from site development and operation. The analysis provides estimates of radiological dose commitments to (1) individuals, from off-site migration of radionuclides from the disposal units, and (2) any individual inadvertently intruding into the disposal site and becoming exposed to the waste after institutional control has ceased. The evaluation is based on the geologic and hydrologic characteristics of the site with consideration of the waste characteristics, facility design, and operating practices. The site must be geologically and hydrologically simple enough to permit reliable long-term prediction of performance. For pathways analysis, the site characterization studies should provide information to determine

- a conceptual model of site geology and hydrology suitable for modeling and analysis,
- a quantitative water budget for the site,
- the water use and water availability in the site area,
- the geohydrologic and geochemical characteristics of the site to the extent necessary for modeling and analysis, and
- the meteorology of the site to the extent necessary for modeling and analysis.

The information required for facility design often overlaps that needed for satisfying the other specific objectives of site characterization. Site-specific data are required for the layout and use of the site; design

of the site drainage system and the disposal units; selection of methods for waste emplacement, backfilling, and closure; and design of a monitoring system. For the design activity, the site characterization studies should provide, as a minimum, specific information to determine

- the runoff and infiltration from storms for drainage design,
- the erosion potential of on-site soils,
- the slope stability of on-site soils,
- the suitability of native soils for backfill and disposal unit covers,
- the revegetative potential of site following closure, and
- the types of monitoring needed and the appropriate locations.

The site characterization studies should also provide sufficient information for preparation of an environmental impact statement as required under the National Environmental Policy Act, if appropriate (see 40 CFR Parts 1500-1508). To determine the potential environmental impacts resulting from construction, operation, and closure of a shallow land burial facility, the statement may focus on ecological, socioeconomic, or other factors not directly related to achievement of the performance objectives. The applicable regulations should be reviewed for determination of the specific information needs (see 10 CFR Part 51).

In summary, the specific objectives of site characterization require extensive multidisciplinary field investigations. For these activities, careful planning and close coordination is necessary to minimize the resources and time required.

4.2 METHODOLOGY

A summary of a methodology for site characterization is shown in Fig. 4.1. Site characterization generally includes a preliminary investigation of site feasibility, a comprehensive field study with laboratory analysis of field samples, a site monitoring program, and a pathways analysis. These activities are considerably more expensive than site selection, because they involve placing experts and equipment at the

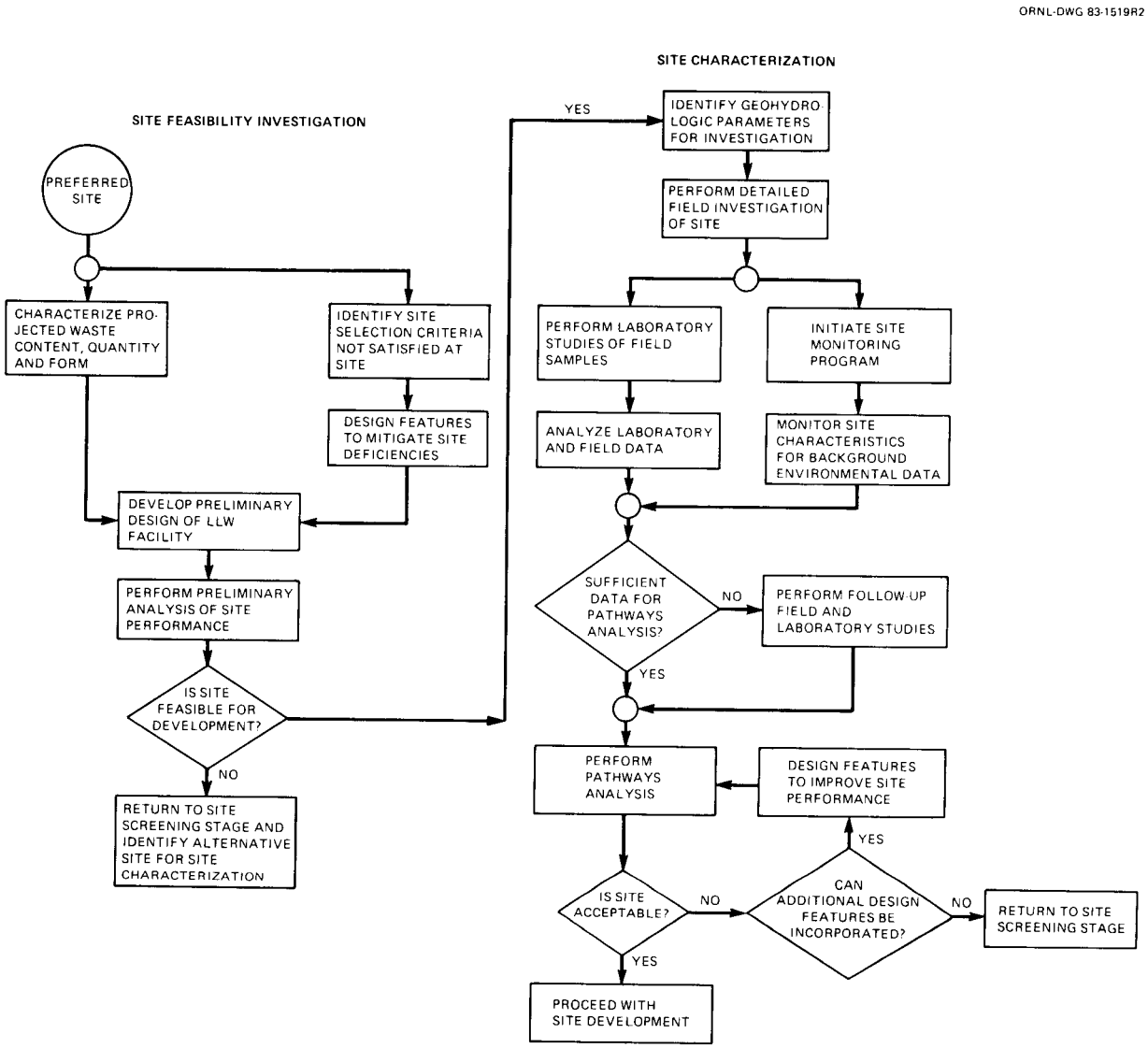

Fig. 4.1. A Methodology for site characterization. Source: Adapted from D. W. Lee, R. H. Ketelle, and L. H. Stinton, 1983. Use of DOE Site Selection Criteria for Screening Low-Level Waste Disposal Sites on the Oak Ridge Reservation, ORNL/TM-8717, Oak Ridge National Laboratory, Oak Ridge, Tennessee.

site. Prudence therefore dictates that the investigations most likely to discover site characteristics that may preclude development be made first.

The site feasibility investigation (Fig. 4.1) provides a preliminary concept of site utilization and performance and initiates the interaction of site design with the field investigation, laboratory studies, pathways analysis, and environmental monitoring activities. The site feasibility study may include characterization of the waste, preliminary site design, and preliminary analysis of site performance.

Characterization of the waste in terms of its physical and chemical form, quantity, and radionuclide concentrations is essential for defining the scope of the field investigation, for performing the pathways analysis, and for establishing the design requirements for site utilization. The characteristics of interest include the leachability of the radionuclides contained in the waste and the adsorption of these radionuclides by site soils under hydrologic conditions representative of the site.

The preliminary design is intended to bound the scope of the field investigation and should encompass siting, operation, closure, and post-closure considerations. The preliminary design should seek to identify the necessary facilities, the proposed layout of projected disposal units, the typical design of the disposal units, and any proposed engineered design features for enhancing natural site performance.

The preliminary analysis of site performance is intended to identify the critical pathways of radionuclide transport. The potential pathways for off-site migration of radionuclides should be examined to estimate the potential environmental exposures and to identify apparent deficiencies in the natural site conditions. Any significant deficiencies detected at this level of analysis should become the focus of the field investigation and should be considered for mitigation by proposed engineered design features as part of the feasibility study.

Most of the information needed for the site feasibility investigation is obtained from data compiled for site selection (Chapter 3) and from other readily available sources. This preliminary investigation can result in a field study that is both more focused and cost-effective, a pathways analysis that is more representative of facility operation, and environmental data more useful for analysis and design.

The field investigation is comprehensive in scope and requires the use of technical specialists and specialized equipment (Sect. 4.3). Geological and hydrological investigations of site conditions are the primary focus of the field program, which should be phased to provide complete and complementary results with a minimum amount of time and resources. Information gained in the early phases can be used to provide the appropriate scope of investigation for the more costly, later phases. The appropriate data to be developed during the investigation are site-specific and oftentimes cannot be completely specified at the program planning step, as shown in Fig. 4.2. Consequently, as results are obtained from surface geophysical surveys and initial subsurface drilling, the scope of the field investigation should be reviewed to ensure completeness. Throughout this investigation, field techniques for data acquisition are preferred to laboratory methods because of the typical disturbance of samples encountered during sample recovery.

The monitoring program is initiated during site characterization to establish background environmental data and to determine seasonal variations in the environmental data. The hydrological aspects of the monitoring program are especially important for establishing the data base for pathways analysis and site design. A discussion of the monitoring program is given by DOE (1983).

A comprehensive pathways analysis investigation (Sect. 2.5.3) is the final phase of site characterization (Fig. 4.1). The results of the pathways analysis are used to determine the location and size of the buffer zone and limitations on waste form and quantity. The pathways analysis is also used to establish design requirements and the need for additional monitoring activities during operation and closure. If the pathways analysis investigation indicates that the limitations placed on site utilization or the waste are too restrictive or that engineered design features cannot remedy site deficiencies, then a return to the site selection stage is necessary to identify an alternative site (Fig. 4.1).

4.3 TECHNIQUES

The techniques employed for site characterization are site-specific. The overriding consideration in selecting the parameters and the methods for

ORNL–DWG 84-9036

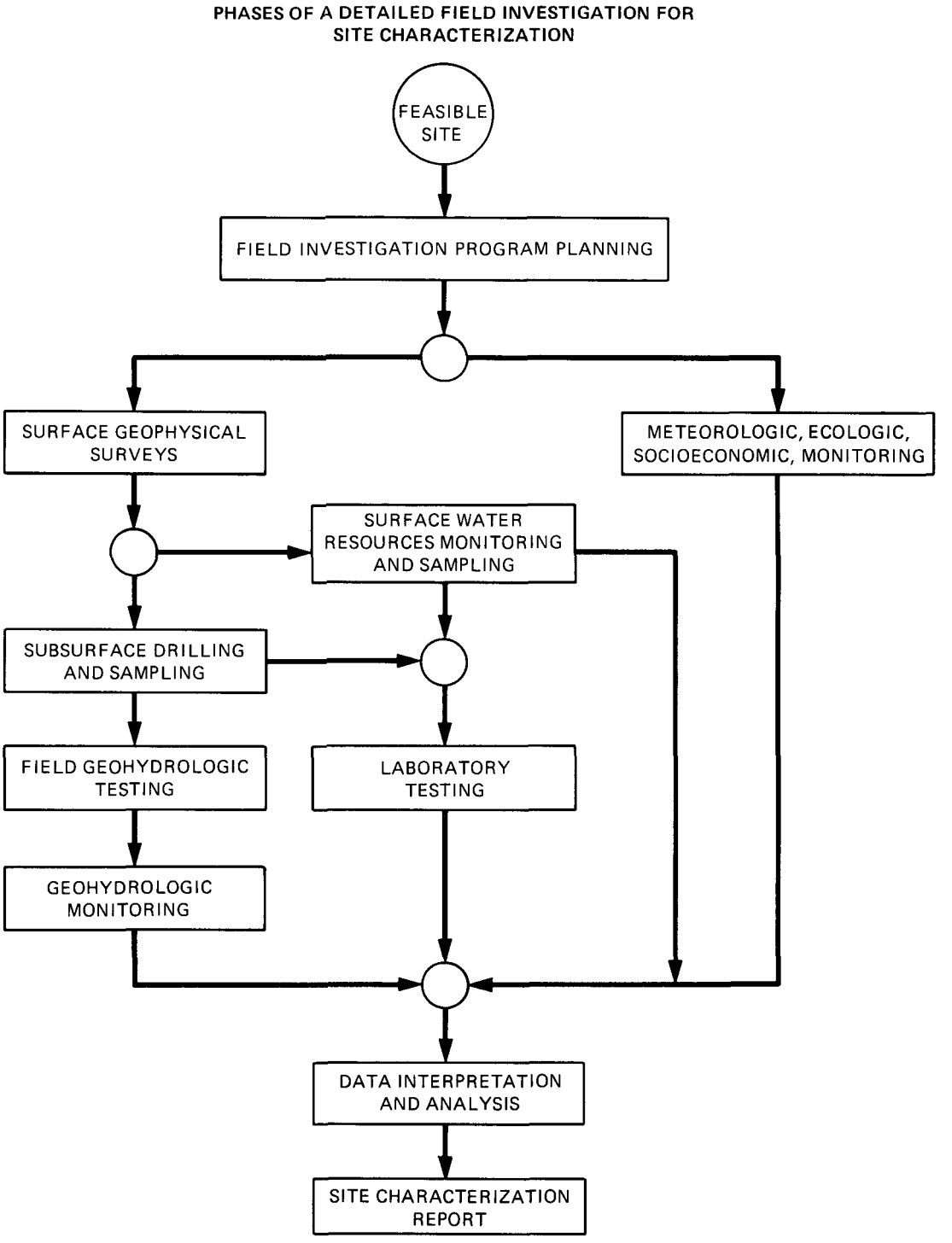

Fig. 4.2. Phases of a detailed field investigation for site characterization.

site characterization is the geophysical environment. Regional variations in geology, hydrology, meteorology, ecology, and socioeconomics make it impossible to give a prescriptive listing of techniques applicable to all sites. The techniques discussed below are widely applicable and comprehensive in scope, but not all would necessarily be used for a particular site. Rather, selection of site characterization techniques should be based on specific information needs, the need for precision in the data acquisition, and cost-effectiveness.

4.3.1 Geology

Many references that describe geologic investigation procedures are available. A fairly comprehensive treatment of the subject is provided by Hunt (1984). Since geologic conditions are site-specific, the site characterization program must be tailored to the site conditions and be flexible enough to allow adjustment between phases of investigation as a conceptual model of the site is developed (Fig. 4.2).

4.3.1.1 Subsurface Investigation Planning

An overall plan for the site characterization program is crucial to ensuring that all the information required for the pathways analysis, site utilization plan, and design for the shallow land burial facility shall be obtained (Sect. 4.1). Planning the subsurface investigations begins logically with tabulation of the data that the studies must provide. Field studies are planned on the basis of the background information developed during site selection that provides a general understanding of regional and local conditions. These data include geologic reports, topographic maps, remote sensing data, and regional and local geologic maps pertinent to the site. Preparation of maps based on interpretation of remote sensing is valuable prior to field work because features of particular interest are often visible on remote sensing imagery.

Remote sensing imagery should be obtained at several different scales and from different seasons and times of day because the sun angle and seasonal variations often accentuate features of interest. Initial field

activities should include geologic mapping of the site and field mapping of site geologic features visible at the surface. Observations made during geologic mapping of the site should be used in planning subsequent investigations.

The specific objectives of site characterization (Sect. 4.1) can be considered in three major areas of investigation: conceptual model of site geology, pathways analysis, and site utilization and design.

Conceptual model

The development of a conceptual model of site geology and geohydrology is fundamental to characterization of the site and forms a basis for the pathways analysis and design. The conceptual model of the site includes

- o provision of three-dimensional distribution of earthen material on the site, based on maps of soil and bedrock stratigraphy and structure;
- o definition of the site geohydrologic system, including hydrologic functioning of each soil and bedrock stratigraphic unit;
- o identification of potential subsurface migration pathways; and
- o understanding of the major geologic processes that may affect long-term stability of the site.

The conceptual model of the site can be developed with greater detail as on-site data describing conditions are obtained and interpreted. As the conceptual understanding of the site develops, critical parameters regarding the site characteristics will become apparent, and the field program should be tailored to provide the best possible definition of the site characteristics most critical to site performance.

Pathways analysis

For sites where the groundwater pathway is of significant concern, a groundwater model is used in the pathways analysis that has data requirements to be addressed in the subsurface investigation. Selection of an appropriate model for use on a particular site requires some prior knowledge of site conditions. Once a model has been identified, however,

the input parameters required by the model must be factored into the subsurface investigation program. A typical list of parameters generally required for modeling groundwater flow is shown in Table 4.1. The parameters are developed from the conceptual model of site geology and hydrology. Techniques for determining these data are discussed in Sects. 4.3.2 and the following sections.

Table 4.1. Typical input parameters for geohydrologic modeling

Aquifer type (unconfined, confined, etc.)
Compressibility coefficient
Effective porosity
Hydraulic conductivity tensor (saturated and unsaturated)
Specific yield
Aquifer thickness
Piezometric head (initial condition)
Storage coefficient
Leakage coefficient
Dispersivity (longitudinal, transverse, vertical)
Anisotropy
Groundwater recharge
Well locations and pumping characteristics
Distribution coefficient
Bulk Density

Site utilization and design

The site utilization plan, including site layout, should be determined with consideration of the site terrain (Sect. 5.4). Terrain analysis should identify areas suitable for disposal units, areas suitable for support facilities, and optimum site access routes.

Site design information requirements include results of geohydrologic testing to determine feasible methods for isolation of wastes from groundwater; soil properties to evaluate design parameters for excavation; and the potential for use of site resources for liner, backfill, and cover material.

Planning and supervising the acquisition of the complex and diverse data required for geologic and geohydrologic site characterization is the key to smooth integration of the pathways analysis and site design activities. The task is best conducted by a team including a geologist, a hydrologist, and a civil engineer, with input from the professionals involved in the pathway analysis investigation.

4.3.1.2 Geological and Geohydrologic Testing

The field and laboratory investigations provide the most complete and complementary results if the investigations are completed in phases as shown in Fig. 4.2. Table 4.2 lists the required data to be obtained during various phases of site characterization. The standardized American Society for Testing and Materials (ASTM) methods for acquiring some of these data are given in Table 4.3. The parameters identified in Table 4.2 address the technical requirements for pathways analysis and facility design. Additions or deletions to Table 4.2 may be necessary for site-specific conditions or requirements.

Early phases of investigations can use surface geophysical techniques to evaluate the uniformity of subsurface conditions and locate areas appropriate for particular detailed testing. Surface geophysical surveys should be planned to answer questions arising from remote sensing interpretation and field geologic mapping activities. Results of the surface geophysical surveys may indicate fairly uniform subsurface conditions or may identify anomalous areas. The results of the surface geophysical surveys should be used to plan the locations of subsurface investigations.

Subsurface investigations normally consist of drilling and sampling of soil and rock materials, performing field tests, borehole geophysical logging, and installation of monitoring equipment. Laboratory testing of soil and bedrock materials is conducted to provide soil physical and chemical data as shown in Table 4.2 and begins as soon as drilling and sampling have been started. After monitoring equipment has been installed, the routine site monitoring program begins. The purpose of site monitoring is to define site behavior in response to seasonal hydrologic variations.

Table 4.2. Geologic characterization parameters and methods of investigation

Parameter to be characterized	Literature review	Surface geophysics	Field mapping	Drilling and sampling	Borehole geophysics	Laboratory testing	Field monitoring and testing[a]
Bedrock							
Lithology			X	X		X	
Stratigraphy	X	X	X	X	X	X	
Regional structure	X						
Local structure	X	X	X	X	X	X	
Depth of weathering			X	X			
Extent of fracturing		X	X				
Bedrock hydrologic conditions			X	X		X	X
Soils							
Physical properties							
Soil classification				X		X	
Grain size distribution						X	
Atterberg limits						X	
Soil-moisture content[b]						X	
Shrink-swell potential						X	
Bulk density			X			X	
Penetration resistance			X				
Porosity						X	
Consolidation						X	
Triaxial shear strength						X	
Stratigraphy	X	X	X	X	X		
Total thickness		X		X	X	X	
Unsaturated thickness[b]		X		X	X		X
Soil hydrologic properties							
Moisture characteristics						X	X
Dispersivity						X	X
Hydraulic conductivity						X	
Soil chemical and mineral properties							
Soil pH and buffer capacity						X	
Distribution coefficients for radionuclides						X	
Soil mineralogy						X	

[a]Hydrologic.
[b]Seasonal variables.

Table 4.3. Methods for geologic characterization

Method[a]	Use
D-121	Dry preparation of soil samples for particle-size analysis and determination of soil constants
D-2217	Wet preparation for same purposes
D-122	Distribution of particle sizes <75 mm
D-123	Liquid limit (Atterberg's upper plastic limit)
D-124	Plastic limit (Atterberg's lower plastic limit)
D-2487-69	Classification of mineral soils for engineering purposes
D-2435-70	Rate and magnitude of soil consolidation under load
D-1557-70	Bulk density
D-127-61	Shrinkage
D-3080-72	Shear strength
D-2850-70	Soil compression and deformation
D-1556-64	Penetrometer
D-2922-71	Moisture determination by gamma-ray attenuation
D-2419-74	Field correlation of compactibility and erosivity
D-1194-72	Bearing capacity (field test)
D-1883-73	Bearing ratio (laboratory)
D-2166-66	Unconfined compressive strength
D-2844-69	Bearing capacity of subgrade soils (laboratory)
D-3441-75T	Bearing capacity penetrometer test (field)
D-2573-72	Field vane shear test

[a]Methods found in publications of the American Society for Testing and Materials.

Surface geophysical surveys

Surface geophysical techniques commonly used in geotechnical and geohydrologic investigations include

- o seismic refraction surveys,
- o electrical resistivity surveys,
- o electromagnetic earth conductivity surveys,
- o ground-penetrating radar, and
- o gravity surveys.

Applications and limitations of each technique are summarized in Table 4.4. Surface geophysical survey techniques are usually more rapid and less costly than subsurface methods of exploration, and their deployment methods are very flexible, thus allowing continual adjustment of the investigation. As previously stated, the surface geophysical techniques provide the best input on which to structure the subsurface exploratory program.

Table 4.4. Summary of surface geophysical techniques

Technique	Applications	Limitations
Surface seismic refraction	Determine strata depths and characteristic velocities, land or water	May be unreliable unless velocities increase with depth and bedrock surface is regular; data are indirect and represent averages
Electrical resistivity	Locate saltwater boundaries and clean granular and clay strata; determine rock depth	Difficult to interpret and subject to wide variations; does not provide engineering properties
Electromagnetic earth conductivity	Useful for locating subsurface anomalies related to soil thickness, soil types, moisture anomalies; may be used to locate probable groundwater migration pathways	Uses a potential method for measurement, which results in nonunique solutions in data interpretation; requires validation in subsurface exploration phase
Ground-penetrating radar	Provide subsurface profile; used to locate buried pipe, bedrock, and boulders	In development stages; does not provide depths or engineering properties; shallow penetration
Gravimeters	Detect major subsurface structures: faults, domes, intrusions, and cavities	Normally used only for cavity information for engineering studies

Source: Adapted from R. E. Hunt, 1984, Geotechnical Engineering Investigation Manual, McGraw, New York.

Subsurface investigations and field testing

Subsurface investigations provide direct observation of subsurface conditions on the site, provide samples of soil and rock materials for testing, allow field testing of various properties of subsurface materials, and provide access to the subsurface for installation of monitoring equipment. Methods of investigation range from excavation of test pits to use of various drilling and sampling techniques. Table 4.5 summarizes the commonly used techniques and briefly describes their applications and limitations.

The sampling program for the site characterization investigations must be responsive to the data needs outlined in Sect. 4.3.1.1. Design of the sampling program should be based on interpretation of preliminary site data and developed with concurrence of the site geologists and the pathways analysis and site design teams. A variety of sampling techniques is available for use in site characterization investigations. In some instances, certain sampling techniques can only be used with specific drilling techniques. Field and sampling techniques must be compatible. Table 4.6 summarizes commonly used soil and rock sampling methods and general conditions for which they are applicable.

Field testing for site characterization is generally oriented toward determining the engineering and hydraulic properties of the soil and bedrock. Table 4.7 summarizes commonly used field tests that may be applicable, depending on site-specific conditions.

Laboratory testing

Laboratory testing is used to quantify physical and chemical characteristics of soil and rock materials for use in the pathways analysis and site design. The laboratory testing program must define the range and mean values of physical and chemical properties of soil and bedrock from each stratum potentially affected by contaminant migration from the shallow land burial facility. Physical and hydraulic parameters required for pathways analysis modeling and site design should be measured in the laboratory testing program. Typical data needs for groundwater pathways

Table 4.5. Commonly used subsurface exploration methods

Technique	Applications	Limitations
Test pits and trenches	Provide visual examination of soil stratigraphy, groundwater and rock depth, and fault features	Limited depth when machine-excavated; deep excavation below groundwater is costly when sheeting and pumping required
Wash boring	Obtain soil samples primarily for identification and index testing; standard penetration test	Slow procedure; cannot penetrate strong soils or rock; undisturbed sampling difficult
Rotary drilling	Obtain samples of all types of soil and rock for identification and laboratory testing of index and engineering properties; in situ testing	Requires relatively large and costly equipment; soil samples and rock cores normally limited to 6-in. in diameter
Rotary probes	Rapidly determine depth to rock with a rotary drill rig	No samples are obtained
Continuous flight auger	Rapid drilling and disturbed sampling in soils with cohesion and greater-than-soft consistency; normal sampling possible if hole remains open; can penetrate soft rock	Hole collapses in soft soils; dry, granular soils without cohesion; and many soils below groundwater
Hollow-stem auger	Similar to continuous flight but hollow stem serves as casing, permitting normal soil sampling	Cannot penetrate very strong soils, boulders, or rock
Percussion drilling (cable tool)	Usually used to drill water wells	Large, cumbersome equipment; normal sampling difficult
Hammer drilling	Good penetration in boulders and cobbles	Large, cumbersome equipment; much soil disturbance results in samples of questionable quality
Wireline drilling	Fast and efficient for deep core drilling on land and for offshore borings	Equipment costly and less efficient than normal rotary drilling for most land investigations

Source: Adapted from R. E. Hunt, 1984, Geotechnical Engineering Investigation Manual, McGraw, New York.

Table 4.6. Soil and rock sampling methods and general application conditions

Samples required and/or material to be sampled	Soils												Shallow subaqueous					Rock							
	Wash sample	Auger sample	Retractable plug	Block sample	Split barrel	Shelby tube	Stationary piston	Osterberg piston	Shear-pin piston	Swedish foil sampler	Denison sampler	Pitcher sampler	Free-fall gravity tube	Harpoon-type gravity tube	Explosive coring tube	Gas-operated piston	Vibracore	Single-tube core barrel	Double-tube core barrel	Double-tube swivel type	Double-tube series "M"	Wireline core barrel	Oriented core barrel	Integral coring	Calyx or shot coring
Disturbed samples: Above GWL[a]	X	X																							
Representative samples:																									
Soft soils			X		X																				
All soils					X																				
Undisturbed samples:																									
Above GWL in cohesive soils				X		X		X	X		X	X													
Soft to firm clays and silts							X	X	X	X															
Cohesive soils, except hard						X		X	X																
For natural and sand density									X																
Hard soils—residual, till, clay											X	X													
Soils alternating hard/soft												X													
Underwater samples:																									
Representative:																									
Most soils to 5 m													X		X										
Muds and silts to 12 m													X	X		X	X								
Stiff to hard soils															X										
Undisturbed:																									
Soft to firm soils																X	X								
Rock coring:																									
Good-quality rock																		X							
Good- to medium-quality rock																			X						
Poor-quality rock																				X	X			X	
Deep borings																						X			
For core orientation																							X	X	

[a]GWL: Groundwater level.
Source: R. E. Hunt, 1984, Geotechnical Engineering Investigations Manual, McGraw, New York.

Table 4.7. Commonly used field tests for in situ testing of soil and bedrock

Category — tool or method	Applications	Limitations
	Rock masses—in situ testing	
Basic properties		
Gamma-gamma borehole probe	Continuous measure of density	Density measurements
Neutron borehole probe	Continuous measure of moisture	Moisture measurements
Index properties		
Rock coring	Measure for rock quality designation (RQD) used for various empirical correlations	Values very dependent on drilling equipment and techniques
Permeability (k)		
Constant-head test	In boreholes to measure k in heavily jointed rock masses	Free-draining materials; requires ground saturation
Falling-head test	In boreholes to measure k in jointed rock masses; can be performed to measure k_{mean}, k_v, or k_h	Slower draining materials or below water table
Rising-head test	Same as for falling-head test	Same as for falling-head test
Pumping test	In wells to determine k_{mean} in saturated uniform formations	Not representative for stratified formations; measures average k for entire mass
Pressure test	measure k_h in vertical boreholes	Requires clean borehole walls

Table 4.7. (continued)

Category — tool or method	Applications	Limitations
	Soils—in situ testing	
Basic properties		
Gamma-gamma borehole probe	Continuous measure of density	Density measurements
Neutron borehole probe	Continuous measure of moisture	Moisture-content measures
Sand-cone density apparatus	Measure surface density	Density at surface
Balloon apparatus	Measure surface density	Density at surface
Nuclear density moisture meter	Measure surface density and moisture	Moisture and density at surface
Permeability (k)		
Constant-head test	In boreholes or pits to measure k in free-draining soils	Free-draining soils; requires ground saturation
Falling-head test, rising-head test	In boreholes in slow-draining materials or in materials below ground-water; can be performed to measure k_{mean}, k_v, or k_h	Slow-draining materials or materials below water table
Pumping test	In wells to measure k_{mean} in saturated uniform formations	Results not representative in stratified formations

Table 4.7. (continued)

Category — tool or method	Applications	Limitations
Shear strength (direct methods)		
Vane shear	Measure undrained strength (s_u) and remolded strength (s_r) in soft to firm cohesive soils in a test boring	Not performed in sands or strong cohesive soils; affected by soil anisotropy and construction time-rate differences
Pocket penetrometer	Measure approximate unconfined compressive strength (U_c) in tube samples; test pits in cohesive soils	Not suitable in granular soils
Torvane	Measure s_u in tube samples and pits	Not suitable in sands and strong cohesive soils
Shear strength (indirect methods)		
Static cone penetrometer (CPT)	Cone penetration resistance is correlated with s_u in clays and in sands	Not suitable in very strong soils
Pressuremeter	Undrained strength is found from limiting pressure correlations	Strongly affected by soil anisotropy
Camkometer (self-boring pressuremeter)	Provide data for determination of shear modulus, shear strength, pore pressure, and lateral stress K_o	Affected by soil anisotropy and smear occurring during installation

Source: Adapted from R. E. Hunt, 1984, Geotechnical Engineering Investigation Manual, McGraw, New York.

analysis are listed in Table 4.1. Typical soil engineering properties that are generally determined for the design are summarized in Table 4.8.

Monitoring program

Site monitoring activities consist of recording water levels in observation wells and periodic well sampling for background water quality. For some sites, engineering geology monitoring may also be appropriate. Groundwater and water quality monitoring programs are discussed in Sect. 4.3.2.2. The monitoring program for engineering purposes may include periodic surveys of geophysical traverses to detect changes in subsurface conditions or the use of seismographs or settlement detectors to monitor tectonic activity (Sect. 4.3.1.4).

4.3.1.3 Economic Resources

The presence of potentially exploitable natural resources on or beneath a shallow land burial site presents a deterrent to site use because the likelihood of future inadvertent intrusion is increased. Natural resources that might occur beneath a site range from clays, sands, gravels, and rock, through petroleum and fossil fuel reserves, to economically attractive deposits of metal ores. Groundwater is also a valuable natural resource. This type of information should be reviewed during site selection (Chapter 3), and an evaluation of the potential existence of economic resources on the site should be made during site characterization. If mineral leases on the land are held by someone other than the property owner, the lessee should be consulted to determine the status of the lease and whether exploration has revealed the presence of mineral resources. Prior to land use for waste disposal, all leases on the land should be possessed by the deed holder to prevent future land-use conflict. A mineral resource evaluation of the site should be performed during site characterization on the basis of the literature review and subsequent geologic investigations.

Table 4.8. Typical soil engineering properties determined in the laboratory

Property/test	Applications
Basic properties	Correlations, classification
Specific gravity	Material identification Void ratio computation
Moisture or water content	Material correlations in the natural state Computations of dry density Computations of dry Atterberg limits
Density: natural (unit weight)	Material correlations Engineering analysis
Density: maximum	Relative density computations
Density: optimum-moisture	Moisture-density relationships for field-compaction control
Index properties	Correlations, classification
Gradation	Material classification Property correlations
Liquid limit	Computation of plasticity index Material classification Property correlations
Plastic limit	Computation of plasticity index Field identifications
Shrinkage limit	Material correlations
Organic content	Material classification
Permeability (k)	Measurements
Constant head	k in free-draining soil
Falling head	k in slow-draining soil
Consolidometer	k in very slow draining soil (clays)

Table 4.8. (continued)

Property/test	Applications
Rupture strength	Measurements
Triaxial shear (compression or extension)	Peak undrained strength for cohesive soils (unconsolidated and undrained test)
Direct shear	Peak drained strength parameter
Simple shear	Undrained and drained parameters
Unconfined compression	Unconfined compressive strength for cohesive soils
Vane shear	Undrained strength for clays
Torvane	Undrained strength
Pocket penetrometer	Unconfined compressive strength (estimate)
California bearing ratio (CBR)	CBR value for pavement design
Deformation (static)	Measurements
Consolidation	Compression vs load and time in clay soil
Triaxial shear	Static deformation moduli

4.3.1.4 Tectonism and Geomorphic Processes

Tectonic activities and geomorphic processes, including mass wasting and erosion, account for the evolution of the existing terrain. These processes are ongoing and must be considered in siting and design of shallow land burial facilities.

Tectonism

For sites in active tectonic regions, site investigations should include documentation of the locations and recorded activity of regional and local tectonic features. Characterization studies for all sites should include a seismic risk analysis, including cataloging of all recorded earth quakes causing felt motion at the site and calculation of the recurrence interval of potentially damaging earthquakes.

The emphasis on tectonism during site characterization should be to verify, on a site-specific basis, the general information obtained during site selection. Verification of the tectonic setting should be based on the results of the previously described geologic investigations. Estimates of recurrence frequency of potentially damaging earthquakes should be prepared for the proposed site by analysis of earthquake records for the region.

Geomorphic processes

Site selection is presumed to have excluded areas with severe mass wasting and erosion potential by using topographic and physiographic criteria (Sect. 3.1). One focus of the site characterization study should be on the erodibility of soils to be used in construction of covers for the disposal units. Soil erodibility may impose design limitations on the site to ensure long-term stability of the disposal unit covers (Sect. 5.3.4).

The Universal Soil Loss Equation developed by the Peterson and Swan (1979) is often used to predict denudation rates over large areas and may be useful in predicting general erosion of the land surface. Gully erosion may result in breaches of soil cover over disposal zones. Remolded soils to be used in construction of the disposal unit cover should be tested for soil

erosion potential. The tests recommended in Sect. 4.3.1.2 include those recommended to determine slope stability for natural and remolded samples. In addition, remolded soils should be tested for shrink-swell potential and dispersive characteristics when subjected to cyclic wetting and drying.

4.3.2 Hydrology

Characterization of the hydrology of a proposed site is necessary to confirm site suitability, provide information needed for the pathways analysis, and provide design and baseline information for the environmental monitoring program (Sect. 4.1). To accomplish these objectives, hydrologic characterization methods must be carefully planned and integrated with other site characterization activities (Sect. 4.2).

4.3.2.1 Surface Water

Site characterization should completely describe the surface water resources developed in site selection, provide adequate data for the design of site drainage systems, and provide baseline data for surface water quality. Additional information may be necessary for the analysis of flooding and erosion potential, environmental pathways, or design of the disposal facility. A summary of the surface water parameters and the methods of investigation is given in Table 4.9.

Surface water hydrology

Site characterization studies should include measurements of runoff and infiltration in the site area and in upstream areas that would contribute runon to the site. Measurements should be made of seasonal variations in runoff and infiltration, and estimates should be made for potential long-term variations. The slope, profile, cross section, and roughness of drainage channels for drainage systems crossing the site should be determined to calculate flow velocities, depths, volumes, and periodicity of flow for the drainage system design. Surface water flow should be measured

Table 4.9. Hydrologic surface and groundwater characterization parameters and methods of investigation

Parameter to be characterized	Literature review	Site visit and mapping	Drilling and sampling	Field testing	Laboratory testing of field samples	Field monitoring (seasonal variability)
Surface water use and availability	X	X				
Surface water flow	X			X		X
Drainage	X	X				X
Overland runoff	X			X		X
Infiltration	X			X		X
Surface water quality	X				X	X
Groundwater use	X	X				
Groundwater quality	X				X	X
Saturated zones						
Depth	X		X			X
Areal extent	X	X	X			
Saturated thickness	X	X	X			X
Hydraulic conductivity	X			X	X	
Effective porosity	X			X	X	
Potential yield	X			X		
Piezometric head	X					X
Dispersivity				X	X	
Anisotropy				X	X	
Distribution coefficient					X	
Surface discharges	X	X				X
Unsaturated zone						
Field capacity					X	
Saturated permeability				X	X	
Permeability variations with head and moisture					X	
Moisture content				X	X	X
Air-entry value					X	
Anisotropy			X		X	
Distribution coefficient					X	
Thickness			X			
Effective porosity				X	X	

for both ephemeral and perennial streams that lack adequate data records. The average flow and the range of flows throughout the water year are appropriate. Discharges from springs and seeps should be measured periodically to establish seasonal variations.

The techniques for obtaining these data depend on site-specific factors such as the size of the surface water body or the runoff volume. Techniques for the measurement of surface water flow, runoff, and infiltration are included in Brakensiek, Osborn, and Rawls (1979) and Techniques of Water Resources Investigations (USGS n.d.). Surface water flow can be measured by the use of current meters, weirs, flumes, or culverts. Current meters are most applicable to larger perennial streams, while weirs and flumes are better adapted to small streams. Culverts often provide convenient collection points for obtaining data on small streams or ephemeral channels. Water stage measurements using staff gauges, recording gauges, or crest-stage gauges can supplement flow measurements. Runoff is usually determined from the analysis of precipitation data and the storm hydrograph of a watershed, taking into account the antecedent moisture condition. Infiltration can be measured with infiltrometers or determined from the analysis of hydrographs.

Surface water quality

The baseline water quality (including all radioactive elements expected to be contained in the waste) should be established for all surface water bodies potentially affected by site development. Seasonal variations in water quality may be necessary to establish the range of concentrations for the parameters analyzed. The parameters to be analyzed should include those with the highest concentration in the projected waste, the smallest potential to be adsorbed, and the greatest potential to impact surface water use. Techniques for sampling and analyzing surface water are included in Standard Methods for the Examination of Water and Wastewater (American Public Health Association, 1975) and in Brown, Skougstad, and Fishman (1970).

4.3.2.2 Groundwater

Characterization of groundwater in combination with geology is the major emphasis of investigation because groundwater is the principal long-term pathway for the transport of radionuclides. The geohydrologic characteristics of the unsaturated and saturated zones, the potential yield of underlying aquifers, and the baseline groundwater quality of aquifers in the site area should be determined during site characterization.

Geohydrologic characteristics

Characterization of the geohydrology of a site may be costly and time-consuming. Careful and detailed planning of field activities is required to design a cost-effective investigation that meets the needs for geologic and hydrologic characterization and provides the appropriate input for modeling of site performance (Table 4.1) and design of the facility (Chapter 5). A summary of the groundwater parameters and methods for their acquisition is given in Table 4.9. The characterization of each saturated zone or aquifer is the most important aspect of the groundwater investigation because of their potential use as sources of drinking water. Prior knowledge of aquifers and geologic complexity will determine the appropriate level of effort. The aquifers of greatest interest are those closest to the surface (usually an unconfined aquifer) and those with the highest yields of potable water. Underlying aquifers in hydraulic communication with overlying aquifers are also of interest, and their locations and thicknesses need to be defined as completely as possible. The maximum elevation of the groundwater table should be determined for sites where waste is to be disposed of in the unsaturated zone. The field program should determine the hydrogeologic unit that is the origin of any groundwater discharge to the surface.

Disposal of waste in a saturated zone may be allowed if the transport of groundwater within the zone can be demonstrated to be by molecular diffusion (10 CFR Part 61-50). To meet this requirement, the field study

must demonstrate that the hydraulic conductivity and effective porosity are extremely low, to result in a hydraulic flux of less than 0.3 m per year. Verification of the saturated zone as a zone of molecular diffusion will require the use of age dating of groundwater by isotopic ratios and radioisotopic methods. The minimum thickness of the saturated zone should be established for sites where waste is to be disposed of in the saturated zone.

Field investigations of the unsaturated and saturated zones to characterize the geohydrologic setting require that a team of experienced specialists, including a geologist, hydrologist, geotechnical engineer, and geohydrologic analyst, contribute to the planning of the field activities and the supervision of their execution. Results obtained during drilling and testing can be expected to modify the scope and extent of field activities. Thus, interpretation and review of data during sample and data collection is desirable for obtaining the information necessary to satisfy the specific objectives of the field program (Sect. 4.1).

Field testing is preferred to laboratory analysis because samples are disturbed when taken for laboratory analysis. Field methods for determining the saturated hydraulic conductivity in the unsaturated zone are discussed by Bouwer (1978). Methods for the field measurement of other unsaturated zone parameters are a topic of current research. Applicable research developments should be considered for use in site characterization in preference to classical laboratory methods because of the typical differences between field and laboratory conditions that arise from sample retrieval for laboratory analysis.

Laboratory methods for the measurement of unsaturated zone parameters use undisturbed samples from the soil zone. Parameters of primary interest are permeability as a function of moisture content and head (Olson and Daniel 1979), anisotropy, air-entry value, effective porosity, moisture content, and field capacity (Table 4.9). These parameters should be determined for representative soil samples, taking into account the soil characteristics of the site. Additional laboratory measurements of dispersivity may be appropriate for inclusion in site characterization. Porosity can be determined by methods given by Black (1965), and dispersivity of contaminants in groundwater systems can be determined with the method developed by Rumer (1962). The laboratory measurement of

dispersivity for fine-grained soils has been reported to be difficult and to yield ambiguous results.

Following drilling and sampling of the aquifer, piezometers should be installed to establish the location of the piezometric surface of each aquifer of interest within the top 30 m of soil and rock. The piezometric surface should be monitored monthly for at least a full year to establish typical seasonal variations. The aquifer's hydraulic conductivity can be estimated by either the pump or slug test (Bouwer 1978). The slug test is preferable for low-yield aquifers that are not suitable for pump testing. Pump testing is performed by pumping high-yield aquifers for an extended period of time while monitoring the drawdown of the potentiometric surface. These techniques are described by Lohman (1972). Dispersivity, anisotropy, and effective porosity may be determined from a field tracer test performed in the piezometers installed in the site area (Lenda and Zuber 1970). For fine-grained soils, tracer tests are often difficult to perform and interpret. The number, locations, and depths of the piezometers are site-specific and design-dependent, and they depend on the model selected for analysis of site performance. Techniques for determining the origin of a groundwater discharge are included in Bouwer (1978). The methods used for a specific site should be selected after consideration of the site hydrogeology.

Laboratory testing of aquifer materials can be used to determine permeability, anisotropy, dispersivity, and porosity. However, laboratory values of permeability and dispersivity are typically orders of magnitude less than field values because of the change of the structure of the porous media during retrieval of aquifer samples and because, in the field, groundwater may move largely through high permeability zones rather than through the geologic matrix represented by the small sample.

Testing of aquifer materials, groundwater, and radioactive waste typical of that to be disposed of is necessary to provide data for the distribution coefficient. Tests should be performed for the range of pH values and waste concentrations likely to be encountered during and after waste disposal operations. A standard method for the laboratory determination of the distribution coefficient for geologic media has not been developed. Consequently, the method of measurement should be carefully considered and documented as part of site evaluation.

Groundwater use

A groundwater use survey should be prepared to the extent possible as part of site characterization. This survey would be an update of information compiled during the site selection activity (Chapter 3) and should identify the current location, construction, and yield of wells near the site that could be contaminated as a result of waste disposal operations. Also, the potential yield of aquifers that underlie the site and could be used as a drinking water supply should be determined. A pump test can be used to determine the yield (Lohman 1972).

Groundwater quality

Aquifers in the site area that could potentially be used as drinking water supplies should be sampled and analyzed for the parameters identified in 40 CFR Part 141. The yield should be established for aquifers with water quality that satisfies these regulations. All aquifers that could be potentially contaminated by site development and operation should be sampled and analyzed for radionuclides expected to be disposed of at the facility. The data should include any seasonal variations in groundwater quality and be of sufficient record length to establish a baseline. Methods for sample collection and analysis are included in Brown, Skougstad, and Fishman (1970) and Standard Methods for the Examination of Water and Wastewater (American Public Health Association 1975).

For sites where waste will be disposed of in the saturated zone, characterization of groundwater quality in the zone must include age-dating data. Such data would be used to demonstrate that any groundwater transport of radionuclides would be limited by molecular diffusion. A discussion of isotopic methods for age-dating of groundwater is included in Hem (1970).

4.3.3 Meteorology

Data on precipitation, evaporation, temperature, wind, atmospheric stability, atmospheric pressure, and ambient air quality are needed to

adequately characterize the site meteorology. These parameters are important considerations in both the pathways analysis and facility design. Meteorological data from the nearest weather station form the basis of site characterization, but they may need to be supplemented with on-site data for specific sites.

Precipitation data are typically collected by either a weighing bucket or a tipping bucket instrument. Data from these systems are automatically recorded and can be telemetered to a central data facility. Because rainfall rates are important site characteristics that are best measured by the tipping bucket design, such instruments are preferred. Evaporation data are collected by determining the net loss of water from a pan. Commercial evaporation pans automatically record the change in pan water level. In conjunction with the recording precipitation gauge, the net evaporation can be determined. The precipitation gauge and evaporation pan must be sited in an exposed, flat area. Collocation of evaporation pans with precipitation gauges is preferred.

Temperature data are best collected by a shielded thermistor, located on the meteorological tower at either 1 m or 10 m, and the data telemetered to a central data facility. The instrument must be shielded and aspirated to minimize the effects of solar radiation. Wind speed, wind direction, and atmospheric stability should be measured from a short (10-m) meteorological tower. The wind instruments are mounted on a crossarm at the top of the tower. To conserve space, the tower may be freestanding (not guyed), but it must be sited at an exposed location, far from any obstructions. If required, a weatherproof enclosure for signal recorders may be located at the tower base. Collocation with other instruments conserves space and simplifies maintenance. Atmospheric stability is best determined by calculating the variability in the wind direction, commonly known as a wind rose. When determined in conjunction with the wind speed and direction, atmospheric motions at the site can be evaluated. Atmospheric pressure is best measured by a recording aneroid barometer, located on or near the meteorological tower at the 1-m level, and the data telemetered to a central facility.

On-site meteorological data covering at least one year are needed to characterize their seasonal nature. The data should be compared and extended with historical meteorological data from the nearest National

Weather Service station, and statistical methods should be used to evaluate potential long-term environmental effects of the site (Panofsky and Brier 1968). A description of the quality assurance program for the meteorological monitoring system should also be included with the data. Since the meteorological data will be kept throughout the operational life of the disposal site and the records transferred to institutional control at the time of closure, a computer-compatible system of data logging and archiving should be used. The computer system to receive and archive the data from the instruments can be used to generate useful summations of the site characteristics. However, strip-chart recorders must be included to provide hard-copy backup data.

Background radiation levels at the site should also be monitored. The monitoring instruments may be located near the meteorological tower. However, the data should be in a form and format identical to those planned for the operation phase of the radiation monitoring program (DOE 1983).

4.3.4 Ecology

Characterization of the site ecology will aid in the design of an environmental monitoring program, be required for the pathways analysis, and provide input for site design features used to inhibit biotic intrusion into the disposal units. The information will facilitate compliance with regulatory requirements, such as the National Environmental Policy Act and the Endangered Species Act.

The level of data acquisition and the manner in which individual issues are treated will be determined on a site-specific basis. Site characterization should seek to complete the data base developed for site selection (Sect. 3.3). In some cases, data should cover at least a 12-month period because seasonal variability is common in the life histories of both terrestrial and aquatic biota.

Terrestrial field data should include the species composition of plant communities in the site area, the relative abundance of the plant species, the age of dominant plant species, the species composition of the mammal and breeding bird communities, and the presence and abundance of important species such as game and burrowing animals. If a rare plant community exists on the proposed site, detailed listings of component plant species,

the relative importance of each plant species, the major environmental parameters that govern the continued existence of the community, and any past disturbances and sensitivity of the habitat to future disturbance should be collected. If an important wildlife habitat exists on the proposed site, the relevant habitat features and wildlife species using the area, the history and trends of use of the area by wildlife, the availability of similar wildlife-use areas in the region, and the probability of continued wildlife use of the area should be determined.

The significance of aquatic ecology as a potential concern depends on the proximity of aquatic habitats to the proposed site. Criteria and standards for the protection of freshwater life (EPA 1976, 1980) may need to be considered for some sites. Field methods useful for characterizing habitat and biota are described or cited in a number of references, such as Becker, Strand, and Watson (1975), Bell and Rickard (1975), Canter (1982), Giles (1969), Ralph and Scott (1981), Salk and DeCicco (1978), Schwoerbel (1970), USFWS (1980), and Welch (1948).

Specific federal and state permits may be needed for any surveys or collections required to define the abundance, distribution, or habitats of endangered or threatened species identified as potentially occurring on-site; appropriate state and federal (U.S. Fish and Wildlife Service) offices should be contacted if such surveys or collections are anticipated.

4.3.5 Land Use and Socioeconomics

Site characterization should provide data needed for the assessment of the potential environmental impacts of facility construction, operation, closure, and institutional control, if appropriate. Topics to be considered include an understanding of how the shallow land burial facility may affect local communities and measures that may be needed to mitigate potential negative impacts.

For some sites, a survey by a professional archaeologist may be needed. Following the survey, a letter will have to be obtained from the state historic preservation officer, indicating his opinion of the archaeology of the site (36 CFR Part 800). If items of archaeological interest are uncovered during facility construction and operation, work may be

interrupted. For such a case, the state historic preservation officer will likely be required to evaluate the find and approve or disapprove continuation of excavation.

4.3.6 Summary

The techniques for site characterization used at a specific site must be selected carefully and be responsive to the specific concerns and features of the site. The site characterization program is intended to provide a complete representation of the site conditions that can be integrated with known data by utilizing reconnaissance and quantitative techniques. The site characterization program should provide the data needed for the verification of site suitability and subsequent design and development. Considerable judgment and care are required for the characterization program to meet its objectives without excessive costs and delays.

REFERENCES FOR CHAPTER 4

American Public Health Association, 1975, Standard Methods for the Examination of Water and Wastewater, Washington, D.C.

Becker, C. D., J. A. Strand, and D. G. Watson, 1975, "Aquatic Ecology," Environmental Impact Monitoring of Nuclear Power Plants, Sourcebook of Monitoring Methods, Vol. 2, AIF/NESP-004, Battelle Laboratories, Richland, Wash., and Columbus, Ohio.

Bell, D. E., and W. H. Rickard, 1975, "Terrestrial Ecology," Environmental Impact Monitoring of Nuclear Power Plants, Sourcebook of Monitoring Methods, Vol. 2, AIR/NESP-004, Battelle Laboratories, Richland, Wash., and Columbus, Ohio.

Black, C. A., 1965, "Physical Properties," Methods of Soil Analysis, Part 1 American Society of Agronomy, Madison, Wis.

Bouwer, H., 1978, Groundwater Hydrology, McGraw, New York.

Brakensiek, D. L., H. B. Osborn, and W. J. Rawls, 1979, Field Manual for Research in Agricultural Hydrology, Agricultural Handbook No. 224, U.S. Department of Agriculture.

Brown, E., M. W. Skougstad, and M. J. Fishman, 1970, "Methods for Collection and Analysis of Water Samples for Dissolved Minerals and Gases," Book 5, Chap. A1 of Techniques of Water Resources Investigations, Reston, Va.

Canter, L.W., 1982, "Environmental Impact Assessment," Impact Assessment Bulletin 1(2), pp. 6-40.

DOE (U.S. Department of Energy), 1983, Environmental Monitoring for Low-Level Waste-Disposal Sites, DOE/LLW-13Tg, National Low-Level Radioactive Waste Management Program, EG&G, Idaho Falls, Idaho.

EPA (U.S. Environmental Protection Agency), 1976, Quality Criteria for Water, EPA-440/9-76-023.

EPA (U.S. Environmental Protection Agency), 1980, Water Quality Criteria Documents, availability: Fed. Regist., 45(231), pp. 79317-79.

Giles, R. H., Jr., 1969, Wildlife Management Techniques, The Wildlife Society, Washington, D.C.

Hem, J. D., 1970, "Study and Interpretation of the Chemical Characteristics of Natural Water," Geological Survey Water-Supply Paper 1473, U.S. Geological Survey, Reston, Va.

Hunt, R. E., 1984, Geotechnical Engineering Investigation Manual, McGraw, New York.

Lenda, A., and A. Zuber, 1970, Tracer Dispersion in Groundwater Experiments, IAEA-SM-129/37, International Atomic Energy Agency, Vienna.

Lohman, S. W., 1972, "Ground-Water Hydraulics," Geological Survey Professional Paper 708, U.S. Geological Survey, Reston, Va.

Olson, R. E., and D. E. Daniel, 1979, Field and Laboratory Measurement of the Permeability of Saturated and Partially Saturated Fine-Grained Oils, Geotechnical Engineering Report GE-79-1, University of Texas, Austin.

Panofsky, H. A., and G. W. Brier, 1968, Some Applications of Statistics to Meteorology, Pennsylvania State University Press, University Park.

Peterson, A. E., and J. B. Swan, 1979, Soil Loss Equation: Past, Present and Future, Special Publication No. 8, Soil Science of America, Madison, Wis.

Ralph, C. J., and J. M. Scott, eds., 1981, Estimating Numbers of Terrestrial Birds, Cooper Ornithological Society and Allen Press, Lawrence, Kan.

Rumer, R. R., 1962, "Longitudinal Dispersion in Steady and Unsteady Flow," ASCE J. Hydraul. Div. 88, p. HY4.

Salk, M. S., and S. G. DeCicco, eds., 1978, Environmental Monitoring Handbook for Coal Conversion Facilities, ORNL-5319, Oak Ridge National Laboratory, Oak Ridge, Tenn.

Schwoerbel, J., 1970, Methods of Hydrobiology (Freshwater Biology), Pergamon, Oxford, England.

USFWS (U.S. Fish and Wildlife Service), 1980, Habitat Evaluation Procedures (HEP), ESM 102, Division of Ecological Services.

USGS (U.S. Geological Survey), n.d, Techniques of Water Resources Investigations, Reston, Va.

Welch, P. S., 1948, Limnological Methods, McGraw, New York.

5. DESIGN

Design is a primary activity for ensuring that a shallow land burial facility will meet the performance objectives discussed in Sect. 2.3, which are to minimize radionuclide migration, inhibit biotic and human intrusion into the radioactive waste, and maintain the disposal units and the site in an environmentally stable condition. The design should take advantage of the natural characteristics of the site and enhance them, as required, with appropriate engineered features. The design should consider both preferred operational practices and characteristics of the waste to be disposed of at the facility. This chapter discusses the various design options for achieving the performance objectives for shallow land burial, given a particular site.

5.1 OBJECTIVES

To minimize the potential for environmental impact of low-level radioactive waste disposal by shallow land burial, the waste must be sufficiently isolated from the human environment as long as it remains hazardous, and release of radionuclides from the disposal units must be controlled within acceptable levels. These conditions are reflected in current regulations (10 CFR Part 61 and DOE Order 5820) as performance objectives that address maximum radiation doses to individuals, protection of inadvertent intruders, and stability of the disposal units and site (Sect. 2.3).

The performance objectives are not prescriptive and do not specify design requirements, so it is necessary to develop design criteria and adapt them to a specific site. Thus, there is considerable flexibility in preparing the facility design. To be appropriate at a specific site, the design criteria must reflect a comprehensive understanding of the natural features of the site, the characteristics of the waste to be disposed of, the construction and operation methods to be used, and the plan for site closure. With an understanding of these factors, which are discussed in Section 5.2, the performance objectives can be translated into a set of

technical objectives for facility design. The principal technical objectives to be met by the design criteria are as follows:

- Minimize the contact between waste and water. Infiltration of surface water into the disposal units should be limited as much as practicable by including design features to divert surface water from flowing onto the disposal units, rapidly drain away incident precipitation or surface water run-on, and limit the rate of percolation through the trench caps. Inflow of groundwater into the disposal unit should also be limited. This can be achieved by locating the disposal units in the unsaturated zone and well above the water table or, if necessary, by incorporating engineered features to reduce the inflow. If water does enter the disposal unit, it should be quickly drained away to prevent prolonged contact with the waste.

- Limit the levels of radiation exposure. The site layout should include buffer zones on all sides, especially in the direction of the primary movement of groundwater, to provide as long a flow path to off-site areas as practicable and to provide a monitoring region for early detection of any migration of radionuclides. Direct radiation exposure rates can be reduced by covering the waste with backfill and thick trench caps. Biotic intrusion and subsequent translocation of radionuclides can be mitigated by choosing backfill and cover materials, including biobarriers, and using biocides to inhibit growth of deep-rooted plants and burrowing of small mammals.

- Ensure stability of the disposal units and the site during operations and after closure. The geotechnical properties of the site limit the size of the disposal units and the stability of the slopes of their sidewalls. The disposal units should be designed to be stable enough to accommodate the operation of heavy equipment without endangering the safety of operating personnel during waste emplacement. Long-term stability can be enhanced by selecting a method for emplacement of waste packages and selecting materials and methods of backfill that provide a high degree of filling of the voids. The materials and methods used for covering the disposal units should provide resistance to wind and water erosion.

- Optimize use of the site. In some cases, there will be areas of the site that are either unsuitable for shallow land burial or have less desirable characteristics than other areas. For optimum use of the site, the most suitable areas should be reserved for disposal units and the less suitable areas used for support facilities. Site characteristics have a major influence on the dimensions and orientation of the disposal units. The disposal units should be oriented with their long axes parallel to the

slopes, both for minimizing water problems and for ease of operations.

Other management concerns to be considered in the design criteria include the cost-effectiveness of the design in terms of construction and operation and the protection of the workers from industrial and occupational hazards.

5.2 FACTORS INFLUENCING THE SELECTION OF DESIGN OPTIONS

The design of a shallow land burial facility is influenced substantially by the requirements for site performance as expressed in the technical objectives (Sect. 5.1). The high standards of performance are usually not achieved solely by the natural characteristics of the site. Considerable effort is required during design to take maximum advantage of a site's natural features and to enhance them, when required, to meet the design objectives in a manner that is economical and adaptable to the operations anticipated for the facility. The long-term performance performance of any engineered features must be established because they are likely to decrease in effectiveness over time. Consequently, the emphasis in design should be to optimize the use of natural features of the site.

There is a close interrelationship between site design and waste characteristics, operating practices, and closure (Sect. 2.2). The requirements for design emphasize that this relationship be established and optimized to the extent practicable. Careful planning is required to select the appropriate options to best meet the performance objectives and provide for efficient operations.

5.2.1 Site Characteristics

Site characteristics probably impose the most severe requirements and constraints for design of a shallow land burial facility. Table 5.1 includes a partial listing of site characteristics that have a major influence on design.

Table 5.1. Site characteristics important in the design of a shallow land burial facility

Climate
Topography
Stratigraphy
Soil thickness
Thickness of the unsaturated zone
Erosion potential
Slope stability
Infiltration rate

Climate is of major importance because it dictates the nature and extent of the water management system. The water managment system must be designed to direct incident precipitation and surface run-on from the disposal units. In humid areas, the annual rate and frequency of precipitation are both high. In addition, the depth to groundwater tends to be shallow and limits the depth of the disposal units. In arid areas, the annual rate of precipitation is lower, but it may occur largely as infrequent rainstorms of high intensity that give rise to flash floods and severe erosion. Erosion is further aggravated at arid sites because of the paucity of vegetation.

Topography, stratigraphy, and soil thickness affect the layout of the disposal facility and the ease with which the disposal units can be excavated. The thickness of the unsaturated zone, as noted above, and the slope stability of the disposal formation determine the depth to which disposal units can be safely and effectively operated. This, in turn, affects the methods available for off-loading and emplacement of the waste (Sect. 6.4). Slope stability and erosion potential influence the design of the water management system and the disposal unit covers, especially the slopes of drainage channels.

The list of site characteristics provided in Table 5.1 is by no means complete. Soil properties, for example, can have a major influence on radionuclide migration and, therefore, be of major concern in the facility design. At the design stage, however, the prospective disposal site would have undergone a characterization study (Chapter 4) to provide essential data on the site and contiguous area for the design effort. Moreover, a

preliminary conceptual design of the facility is used to optimize the site characterization study (Sect. 4.2) and in the performance assessment (Sect. 2.5) to ascertain the suitability of the site.

5.2.2 Waste Characteristics

The types of waste, waste forms, and waste volumes are important considerations for the design because the waste is the source for potential harm to the public and the environment. In many cases, however, waste characteristics cannot be forecast with certainty, thus necessitating conservatism in the design to accommodate the uncertainties. Factors that should be considered in determining the types of waste to be disposed of at the facility are listed in Table 5.2. It is unlikely that all of these factors can be defined for all the wastes. However, they should be identified as completely as possible for preparing the design and for developing the waste acceptance criteria for a specific site (Sect. 6.3).

Table 5.2. Factors to be considered in the identification of waste types

Isotopic content
Packaging
Chelating agent content
Liquid content
Pyrophoric content
Hazardous and toxic content
Gaseous content
Biohazard potential
Corrosivity
Explosive potential

The stability and physiochemical properties of the projected waste types are important components of the waste characteristics but are likely to be even more uncertain than the projection of waste volumes. In spite of this, the waste acceptance criteria will include the properties of the waste either by assumption or from actual data. Consequently, a good definition of the actual properties of the waste can reduce the conservatism in design that would be required in the absence of data. A summary of the various

factors associated with the stability and physiochemical properties of the waste is shown in Table 5.3.

Table 5.3. Factors to be considered in evaluating the stability of a waste type

Package integrity
Structural strength of waste package
Moisture content
Transformation of waste by microbial activity
Transformation of waste form by radiation
Transformation of waste form by chemical reactions
Corrosive liquid content
Void spaces
Compressibility of waste
Leaching potential of waste

The waste classification system will also influence the facility design. Low-level radioactive waste may be classified in terms of its of physical form and characteristics and the half-lives and concentrations or the radionuclides (Sect. 2.4.1). A waste classification system exists fts commercial waste (see 10 CFR Part 61), but no such system currently exise for defense wastes. Once the wastes are classified, using the applicable classification system, the projected quantities and types of waste can blass segregated in the design plan as separate design classes. Each design cple, can then be considered as having its own disposal unit design. For exam the long-term stability of disposal units for wastes with short-lived radionuclides and a low hazard potential require less attention than do disposal units for wastes with long-lived radionuclides and high hazard d potential. Moreover, disposal units for wastes that retain a high hazar potential beyond the institutional control period may require intruder barriers.

In summary, if the waste characteristics can be forecast with certainty, site layout can be more efficiently designed to satisfy the projected disposal needs and optimize the natural features of the site.

5.2.3 Operating Practices and Closure

The design for a shallow land burial facility should result in the development of a facility that can be efficiently and safely operated and closed. While operating practices and closure may be modified after the design is prepared, consideration of operation and closure at the design stage enables the designer to narrow the available options to those most suited to the needs of a specific site.

Operating practices are not standardized and may vary widely (Chapter 6). Table 5.4 summarizes elements of operations that should be considered in design. The areas of greatest interest are sequencing of the disposal units and emplacement of waste into the units. Disposal unit sequencing refers to the order of excavation and use of the units, their locations, and the types of waste in each unit within the disposal area. The sequencing of units involves identification of equipment needs, delivery routes to the disposal area, storage needs for backfill and waste, and other logistical factors relevant to design (Sect. 5.4.3). The method for emplacing waste into the disposal units influences the excavation techniques, equipment needs, and backfilling methods.

Table 5.4. Elements of operations to be considered in design plan development

Disposal unit sequencing
Waste treatment
Excavation of trenches
Disposal unit construction
Waste delivery to disposal unit
Off-loading of waste
Emplacement of waste
Personnel requirements
Occupational and environmental monitoring

The rate of receipt of each waste class can be used to estimate the individual disposal unit sizes and locations that will facilitate waste emplacement without interference from other operations such as excavation, backfilling, or disposal of other waste classes. The means for off-loading

waste, backfilling, and minimizing the contact of water with the waste should be factored into the selection of methods for placing waste into the trenches. The selection of waste emplacement methods can also be influenced by the need for trench liners, capillary barriers, drains, or other design factors.

Site and disposal unit closure plans must be factored into the design because of the importance of closure in the long-term performance of the site. Table 5.5 summarizes the elements of site and disposal unit closure that should be considered in developing the design. Disposal units should be backfilled with materials that fill the void spaces as completely as possible. The need for intruder barriers depends on the waste types buried within the disposal units. Design and construction of disposal unit covers are critical in minimizing infiltration. Drainage and stabilization are critical for the postclosure phase and should be considered in the initial design.

Table 5.5. Elements of the closure plan to be considered in the design plan

Disposal unit closure
Backfilling
Cover design and construction
Biotic barriers
Intruder barriers
Stabilization
Disposal site closure
Drainage
Stabilization
Survey control
Monitoring
Facility decommissioning
Security

5.2.4 Summary

The design of a shallow land burial facility must be carefully planned, taking into account the estimated waste types and volumes, required on-site facilities, site use over the life of the site, and needs for operation and closure. These elements can be combined with design criteria to prepare a detailed design plan for the disposal units and site facilities. The design plan can then be used for quality control during construction of the disposal units and ancillary facilities.

5.3. DISPOSAL UNIT DESIGN

The disposal units of a shallow land burial facility consist of the waste trench, trench drainage system, monitoring system, backfill, cover, and any other engineered features required for successful operation. The design of the disposal units includes the specifications for these components. At a specific facility, there may be several design options for the disposal units. Emphasis should be placed on the overall design of the unit rather than only the portion excavated in the soil.

5.3.1 Waste Trench

The design of the trench to be excavated in the soil includes the specification of the trench size and the slopes of the bottom and sidewalls. The trench size should be consistent with the rate of receipt of wastes and the types of waste to be disposed of, the sidewall stability, and the use of engineered features such as liners or capillary barriers. Trench length and width depend on the size and topography of the site and the proposed method of operations. Larger trenches offer better land utilization, but they require more complex drainage control and give rise to potentially greater radiation exposure to workers during operations. Table 5.6 lists the dimensions of trenches at existing shallow land burial facilities.

Table 5.6. Trench sizes at existing shallow land burial facilities

Location	Length (m)	Width (m)	Depth (m)
Commercial facilities			
Barnwell, S.C.	150-300	15-30	5-7
Beatty, Nev.[a]	260	12-15	Up to 15
Morehead, Ky.[a]	60-150	24	6-8
Richland, Wash.	90	8	Up to 14
Sheffield, Ill.[b]	150	15-18	6-8
West Valley, N.Y.[b]	180-210	10	6
DOE facilities			
Savannah River	Variable	6	6
Oak Ridge	15	3	3-4.5
Los Alamos	120-180	8-30	8
Idaho	Up to 275	Up to 30	4-8
Hanford	Variable	1.5-5	4-8
Nevada	215	90-120	6-8

[a]Status of the Beatty site is uncertain.
[b]Inactive site.
Source: E. S. Murphy and G. M. Holter, 1980. Technology, Safety, and Costs of Decommissioning a Reference Low-Level Waste Burial Ground, NUREG/CR-0570, Pacific Northwest Laboratory, Richland, Wash.

Trenches should be as deep as practical to provide greater utilization of land while allowing more vertical separation between the waste and the ground surface. The additional vertical separation provides more shielding and greater barriers to intrusion. However, depth may be limited by either the geotechnical properties of the soil or the depth and fluctuation of the groundwater table.

The sidewall slope depends on the stability of the earthen material, which is site specific and may sometimes vary from trench to trench. Slope stability depends on the shear strength of both the excavated and subgrade soils; the loading to be experienced by the soil from equipment operated adjacent to the cut slope; the proximity of the cut slope to stockpiles, buildings, and storage areas; and the moisture content of the soil. Slope failure can result in slumping of the disposal unit during operations and in

subsidence following closure. Slope stability is discussed in detail by Tucker (1983) and Spangler and Handy (1982).

The trench sidewalls should be as nearly vertical as practicable for more efficient utilization of the disposal area. When sidewalls are unstable, they can be sloped or step-graded. At the Barnwell, South Carolina, disposal facility, sloughing caused by precipitation and freezing during operations has been minimized by anchoring plastic sheets around the top of the sidewalls and extending them onto the trench shoulder.

The trench bottom can be sloped both laterally and longitudinally to enhance drainage of incident precipitation during trench filling in areas where the rainfall rate is sufficient to accumulate water in an open trench. The slope depends on the quantity and intensity of precipitation and the rate at which water can be pumped from the sump, but grades of at least 1% are necessary for drainage. A sloped trench bottom reduces the time that the waste remains in contact with water but increases excavation costs.

Slit trenches (Fig. 5.1) are commonly used for disposing of wastes with high radiation exposure rates. Occupational exposure is minimized by rapid emplacement of the waste and immediate backfilling. Backfill is added until the radiation exposure at the top of the trench has been reduced to an acceptable level. Slit trenches are typically narrow, the width of a backhoe, and have depth:width ratios of up to 20:1. Especially during seasons when the potential for slope failure is high, slope failure in slit trenches can be partially minimized by limiting the length of the trench so that the trench is quickly filled and backfilled.

ORNL–DWG 84-8346

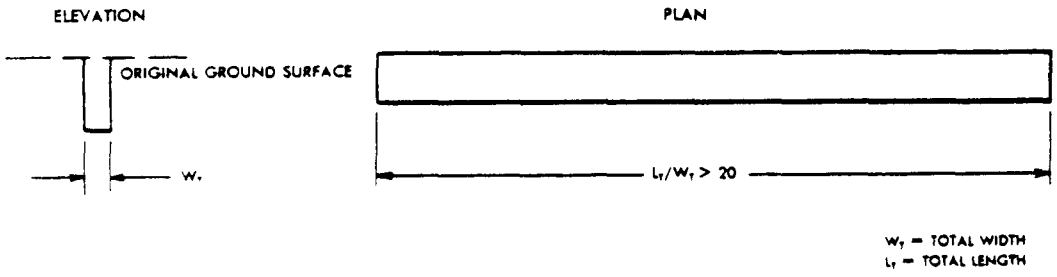

Fig. 5.1. Conceptual design of a slit trench.

The depth of excavation is critical to the overall performance of the facility. There should be provisions in the design to prevent the groundwater from flowing through the disposal unit and coming into contact with the wastes. The best means for isolating the wastes from groundwater is to leave a thick, unsaturated soil layer between the trench bottom and the uppermost aquifer. For long-lived, high-activity wastes, however, the Nuclear Regulatory Commission (10 CFR Part 61) requires a depth of disposal greater than 5 m below the natural grade for commercial facilities. Engineered barriers may also be used. In humid regions, this requirement may preclude a thick soil layer below the trench bottom.

Undesirable soil units, such as sand or gravel, which can serve as moisture migration pathways, may be present in the vicinity of a disposal unit. Such soil units may be detected during site characterization or in the course of excavation. Potential migration pathways should be isolated in the vicinity of the disposal unit to ensure adequate performance. Design options for isolating high-permeability soil units include removal and replacement, grouting, and synthetic liners.

5.3.2. Trench Drainage

The control of water for individual disposal units includes management of surface water runoff during excavation and disposal unit operations and the control of any subsurface water within the disposal unit. Surface water managment is needed at both arid and humid sites, while subsurface moisture control is of greater concern at humid sites. Drainage control measures for individual disposal units should provide protection against water entering the disposal units as the primary means for water management and control. Site drainage, as discussed in Sect. 5.4.2, provides the major control of surface water and groundwater.

Drainage control within the disposal unit should be designed to address site-specific problems, some of which may be discovered during excavation of the disposal unit. Especially in humid regions where the likelihood of drainage control problems is greatest, the disposal unit drainage system should be checked for effectiveness during construction before the unit is filled. Historically, the most common problems encountered in disposal

units result from surface water runoff entering the disposal unit. At the Barnwell, South Carolina, shallow land burial facility, French drains are installed in conjunction with 1% sloped trench bottoms to collect any water that might infiltrate into the trenches (Fig. 5.2). The French drain and the trench bottom are covered with a permeable geofabric to provide a stable foundation for waste emplacement. The French drain discharges to a sump that is routinely monitored and pumped when necessary. The system has been effective in controlling and monitoring water in the disposal units.

At some sites, it may be neccessary to control moisture migration through the sidewalls of the disposal unit. Moisture may move into the disposal unit through isolated sand lenses, through defects in the disposal unit cover, or by capillary transport. The use of cutoff walls, grout, synthetic liners, capillary barriers, or wick drains may be effective for these types of problems.

Cutoff walls, although costly, may be appropriate for isolating the disposal unit from groundwater. These walls can be constructed using slurry wall technology or other drainage controls commonly applied to large earthworks. Grout injection is less costly but is likely to be less effective in isolating the disposal unit. Synthetic liners can be used on the sidewall, but their emplacement may require the sidewall to be constructed with a gentle slope and be firmly stabilized. The long-term performance of synthetic liners may be compromised by frost or gas generation beneath the liner (Jones 1983, Reed et al. 1983). Capillary barriers can be used to reduce the capillary transport of moisture. A capillary barrier is merely a coarse gravel, sand, or porous synthetic material layer placed on the sidewall to provide a layer of low capillary suction. Geofabrics are commonly used to isolate sand and gravel barriers from the adjoining soils. For construction of such barriers using sand and gravel, the sidewall slope should not exceed 2:1 to prevent the gravel from slumping prior to filling the disposal unit.

Wick drains represent a new concept in disposal unit moisture control. They consist of a fine-grained material used to surround the waste on the sidewalls and top of the disposal unit and a coarse-gravel layer between the fine layer and the waste (Fig. 5.3). When the system is not saturated with moisture, the higher suction potential of the fine material reduces the

ORNL-DWG 84-8347

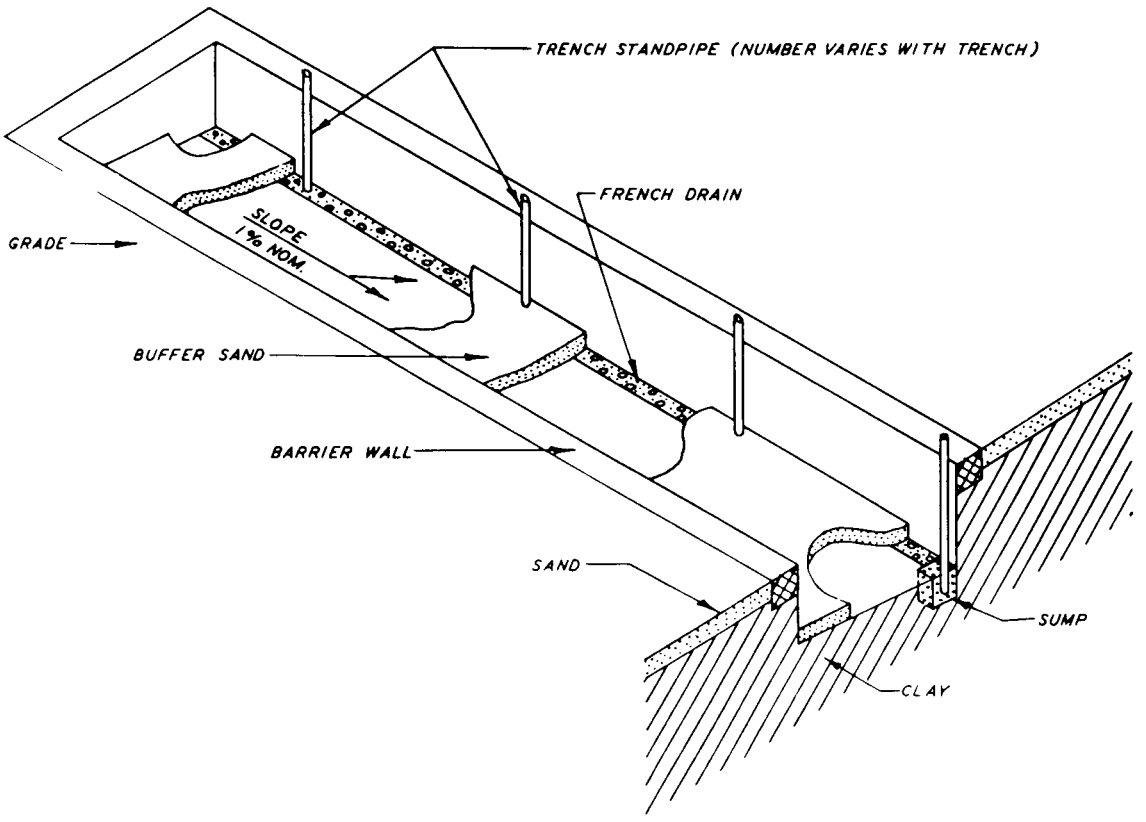

Fig. 5.2. Schematic Diagram of disposal trenches at the Barnwell, S.C., facility. Source: P. G. Tucker, 1983, Trench Design and Construction Techniques for Low-Level Radioactive Waste Disposal, NUREG/CR-3144, U.S. Nuclear Regulatory Commission.

ORNL–DWG 84-8348

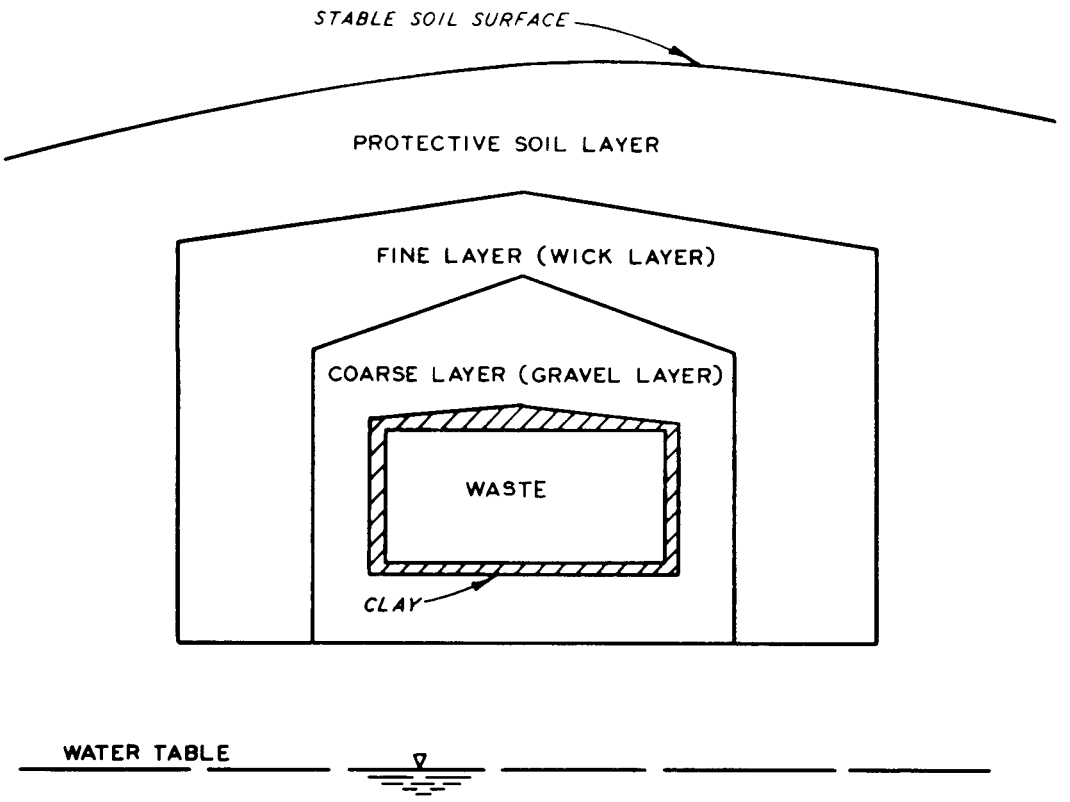

Fig. 5.3. Conceptual design of the wick drainage system for low-level waste trenches. Source: B. L. Herzog et al., 1982, A Study of Trench Covers to Minimize Infiltration at Waste Disposal Sites, NUREG/CR-2478, U.S. Nuclear Regulatory Commission.

transport of moisture to the coarse layer so that it serves as a moisture barrier for the waste. Conversely, when the system is saturated, the same property allows any free liquid entering the coarse layer to quickly drain to the bottom of the layer. The long-term performance of wick drains is currently being evaluated at Los Alamos National Laboratory (Abeele et al. 1983). Porous synthetic material has been recently introduced for drainage control, but the long-term performance of this type of material for shallow land burial has not been established. The material is available in sheets that can be placed on vertical walls.

In summary, disposal unit drainage has the primary objective of (1) reducing surface water and groundwater entry into the disposal unit through the sidewalls or from runoff entering the top of the disposal unit and (2) minimizing the time the water remains in contact with the waste.

5.3.3. Trench Backfill

Historically, on-site earthen materials excavated from the waste trench have been used for backfill. Many existing disposal units are located in fine-grained soils that are difficult to compact. Voids are often left in the disposal unit and eventually filled by natural processes, thus resulting in subsidence and failure of the disposal unit. Also, fine-grained soils have poor drainage characteristics, and water entering the disposal unit tends to remain in contact with the waste to generate contaminated leachate. Postoperational subsidence can be minimized by using either backfill material that will not consolidate excessively and/or grout to stabilize the backfill.

Backfill materials such as sands and gravels have low compressibility and a low plasticity index and will not consolidate excessively. Sands and gravels also have good drainage characteristics and would reduce the contact time between infiltrating water and the waste packages. For disposal units with stable waste packages, the use of sands and gravels for backfill would reduce voids and soil bridges, provide good drainage, and increase the structural support for the disposal unit cover. The use of sand and gravel for backfill is appropriate for disposal units designed to use the "wick effect" as part of the disposal unit design (Sect. 5.3.2). The

disadvantages of using alternative backfill are the increased material-handling requirements, the need for importing materials to sites where sand and gravel are not available, and the increased costs.

Chemical or suspension grouts have been proposed as backfill to encapsulate the waste. Suspension grouts (typically Portland cement) or chemical grouts are mixed and then pumped or placed into the disposal unit. Grouts injected under pressure will fill all voids, but grouts mixed with backfill and then placed in the disposal unit may not. The different types and properties of grouts are discussed in DOE (1984), by Tucker (1983), and by Roop et al. (1983). Grouting completely encapsulates the waste and reduces the performance requirements for the disposal unit cover. Hardened grouts have unconfined compressive strengths that can exceed 3.4×10^3 kPa so that subsidence would not be of concern for properly grouted disposal units. The disadvantages of grounting include include the cost of the grout (up to $6.65/gal), the high cost of moving equipment onto the site, the necessity for specialized techniques and equipment, the need for laboratory testing, and the limited number of firms involved in grouting (Tucker 1983).

Another alternative to stabilized backfill is the use of plastic soil-cement, sometimes referred to as a lean grout. Plastic soil-cement is a cement-stabilized soil consisting of a mixture of soil and cement with sufficient water to form a consistency that can be pumped without segregation. Sands are excellent for this purpose. Plastic soil-cement is a pumpable mixture and can be expected to fill voids completely and provide 7-d compressive strengths of 2×10^3 kPa. Plastic soil-cement is less expensive to use than grouts and can often use soils available on-site. The plastic soil-cement will encapsulate the waste but is likely to be more permeable than grouts. Additionally, plastic soil-cement may crack during curing, thus providing less protection for the waste package against contact with moisture. Descriptive information on the preparation and applications of plastic soil-cement is included in Earth Manual (DOI 1974).

Compacted soil-cement may have limited application in backfilling disposal units. Compacted soil-cement is a nonpumpable mixture of soil and Portland cement that is drier than plastic soil-cement and typically contains less cement. The mixture is applied in layers of 15 to 60 cm and

roller compacted after emplacement. Ideal soils are 7.5 cm gravel maximum to 200 sieve minimum with low silt and clay contents. Following compaction, porosities of 0.5% can be achieved. Compacted soil-cement costs less than plastic soil-cement or grouts and results in a nearly impervious, stable soil. However, it may not completely fill voids within the depth interval where the waste is buried, and heavy compaction equipment is needed to consolidate the soil-cement. Additionally, soil-cement is less tolerant to differential settlement than grouts, may crack during curing, and is susceptible to attack by acid or alkaline conditions. Soil-cement may have its best application when used in combination with other backfilling methods or in the final backfill layer of the disposal unit. Additional information on the preparation and applications of soil-cement is included in Earth Manual (DOI 1974).

In summary, several alternative materials can be used to backfill disposal units to reduce voids, improve stability, and reduce the potential for contact of the waste with infiltrating water. For most applications, these alternatives will increase the costs of disposal unit closure and expand the scope of operations performed at the disposal facility. Selection of the appropriate materials and methods for a specific disposal unit is made on the basis of the types of waste to be buried, the performance requirements for the disposal unit, and the costs of disposal unit closure. These factors will vary from site to site and perhaps even for the disposal units within a given site.

5.3.4 Trench Cover

The trench cover must satisfy several objectives, including stability, structural integrity, infiltration reduction, intruder protection, and protection against biotic intrusion. For some disposal units, the cover will be multilayered with each layer designed to perform a separate function. Tucker (1983) has proposed a multilayer cover that includes a hydraulic barrier, a drainage layer, a biotic barrier, an intruder barrier, and a soil cover. The appropriate number of layers for a cover is site specific and should be determined after the necessary functions for the

cover have been identified. An illustration of the multilayered-cover concept is shown in Fig. 5.4.

Multilayered covers are a recent concept for application to low-level waste disposal. Existing procedures for covering disposal units are summarized in Table 5.7 and discussed in Herzog et al. (1982). The permeability of the cover should be less than that of the floor and sidewalls of the disposal unit to prevent the accumulation of moisture in the waste (known as the "bathtub effect").

Hydraulic barriers can be placed over the final backfill of the disposal unit to reduce the infiltration of surface water into the unit. The hydraulic barrier must have structural strength to perform over the long term. Research is currently under way to develop a soil beam with geotextiles that are capable of providing structural strength as well as limiting infiltration (McCray et al. 1983). The long-term performance of these soil beams is not known at this time. Tucker (1983) provides an extensive discussion of four material groups for hydraulic barriers: soils, admixed materials, polymeric membranes, and sprayed-on soil sealants. The hydraulic barrier is typically extended beyond the width of the disposal unit onto the trench shoulder. The trench shoulder should be prepared to accept the hydraulic barrier and to aid in diverting runoff from the hydraulic barrier to the site drainage system. Tucker (1983) has proposed that hydraulic barriers of adjacent disposal units could be overlapped to enhance the isolation of the disposal units from infiltrating water (Fig. 5.5).

The drainage layer (Fig. 5.4) is intended to capture infiltrating water and to divert surface water to the site drainage system. The drainage layer includes a coarse gravel or other coarse material with either a filtered buffer of finer material or a filter fabric to prevent clogging of the drainage layer. The drainage layer discharges to a collection system located away from the shoulder of the disposal unit. The collection system should be designed to minimize infiltration of water from the drainage layer into the waste trenches.

Intruder barriers can be used to protect the cover from plant and animal intrusion and to warn the inadvertent intruder. Research currently under way indicates that plant and animal intrusion can be averted by

ORNL–DWG 84-8350

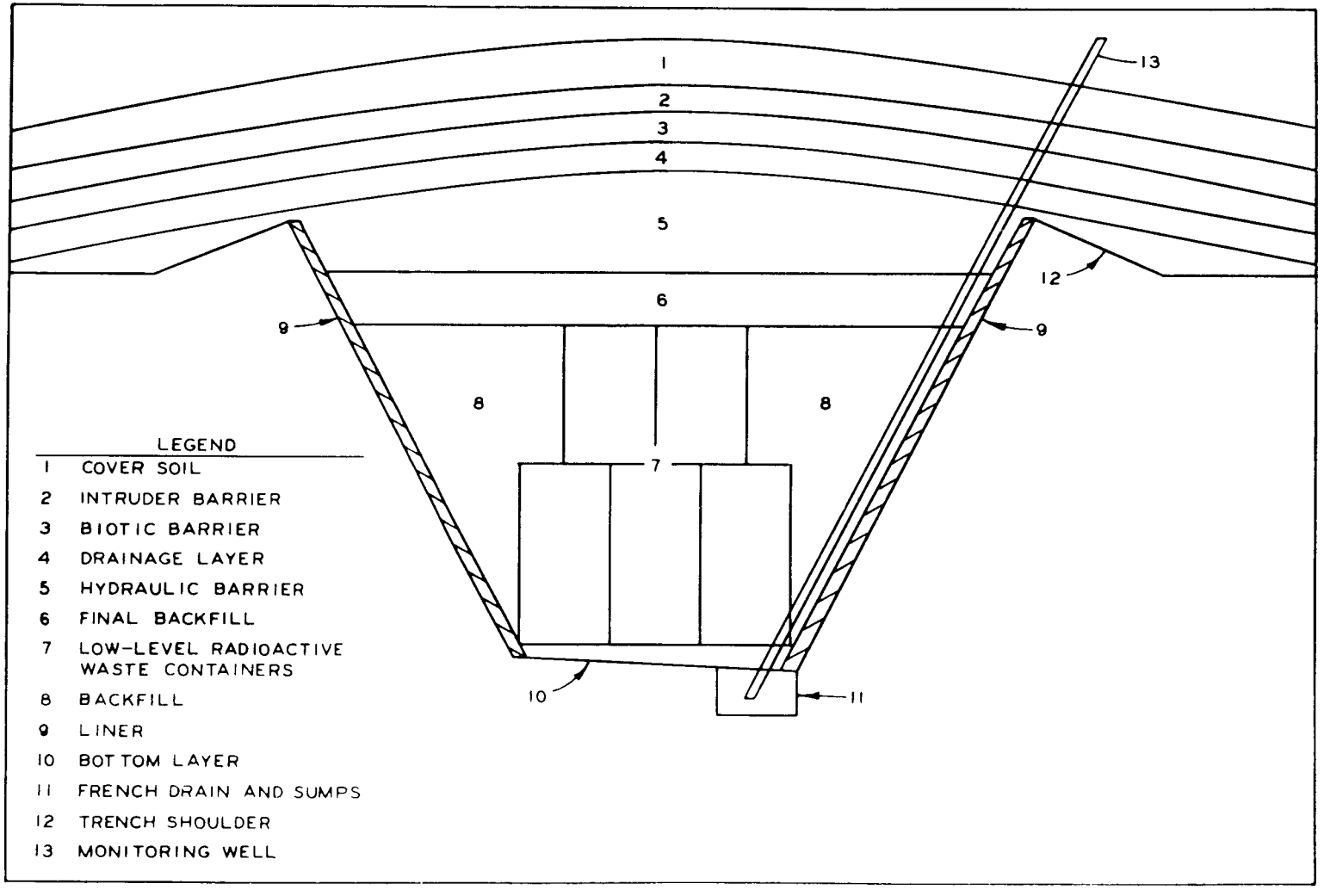

Fig. 5.4. Conceptual design of a multilayered trench cover. Source: P. G. Tucker, 1983, Trench Design and Construction Techniques for Low-Level Radioactive Waste Disposal, NUREG/CR-3144, U.S. Nuclear Regulatory Commission.

Table 5.7. Trench-capping procedures at shallow land burial facilities

Location	Type	Depth
Commercial facilities		
Barnwell, S.C.	0.6 m of clay plus an additional mounded cover	3.0-m cover at center line and 1.5-m cover at trench edge
Beatty, Nev.[a]	Excavated earth fill, no compacting	Minimum 2-m cover mounded to 0.6 m above grade
Morehead, Ky.[b]	Compacted clay, reseeded	Minimum 1-m cover mounded to 0.6 m above grade
Richland, Wash.	Excavated earth fill, no compacting	Minimum 2-m cover mounded to 1 m above grade
Sheffield, Ill.[b]	Compacted clay, reseeded	Minimum 1-m cover mounded to 1 m above grade
West Valley, N.Y.[b]	Excavated earth fill, compacted with topsoil added	Minimum 3-m cover mounded to 1.5 m above grade
DOE facilities		
Savannnah River	Excavated fill to ground surface and mounded as necessary	Minimum 1.2-m cover or that needed to reduce dose to <6 millirem/h at surface
Oak Ridge	Excavated material to ground surface and reseeded	Minimum 1.0-m cover to ground surface
Los Alamos	Excavated tuff fill with compaction	Minimum 1.5-m cover with mounding 0.5 to 1.0 m above grade
Idaho	Excavated soil fill and reseeded	Minimum 1.0- m cover to ground surface
Hanford	Excavated fill to surface and mounded as necessary	Minimum 2.5-m cover or that needed to reduce dose to <1 millirem/h at surface
Nevada	Excavated fill to surface, reseeded and mounded as necessary	Minimum 2.0-m cover with mounding a minimum of 0.9 m (3 ft) above grade

[a]Status of the Beatty site is uncertain.
[b]Inactive site.
Source: E. S. Murphy and G. M. Holter, 1980. Technology, Safety, and Costs of Decommissioning a Reference Low-Level Waste Burial Ground, NUREG/CR-0570, Pacific Northwest Laboratory, Richland, Wash.

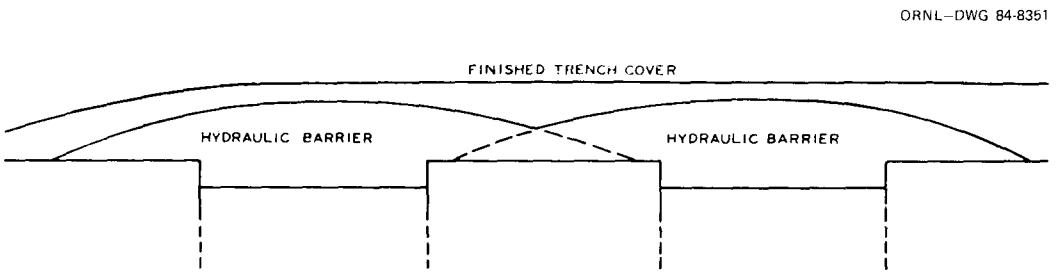

Fig. 5.5. Conceptual design of overlapping trench covers. Source: P. G. Tucker, 1983, Trench Design and Construction Techniques for Low-Level Radioactive Waste Disposal, NUREG/CR-3144, U.S. Nuclear Regulatory Commission.

incorporating a biotic barrier composed of very coarse gravel in the disposal unit (DePoorter et al. 1982, Hakonson et al. 1982). For many sites, the drainage layer and the biotic barrier could be combined, thereby reducing the costs associated with cover emplacement.

Roller-compacted soil-cement is presently being applied as a biotic barrier for tumbleweeds at the Hanford reservation (Shraeder 1983). The roller-compacted concrete provides a difficult-to-penetrate barrier with a permeability as low as 10^{-11} cm/s. The barrier is intended to prevent the future intrusion of tumbleweeds into the waste.

Protection from inadvertent human intrusion has not been clearly defined at this time, but two options have been proposed (Tucker 1983):

1. placement of a barrier between the waste and the intruder as an alert to the presence of the waste and
2. placement of the waste at a depth beyond which the inadvertent intruder will dig.

Material barriers of reinforced concrete and steel are costly, while soil-cement barriers may not be sufficient in some areas. The layered-waste concept, which is referred to by Tucker (1983) as the "Russian Doll," would put the most hazardous wastes on the bottom of the disposal unit with the least hazardous at the top (Fig. 5.6). This technique has the potential of fulfilling both options identified previously provided that the site performance for protection of the public can be ensured.

ORNL–DWG 84-8349

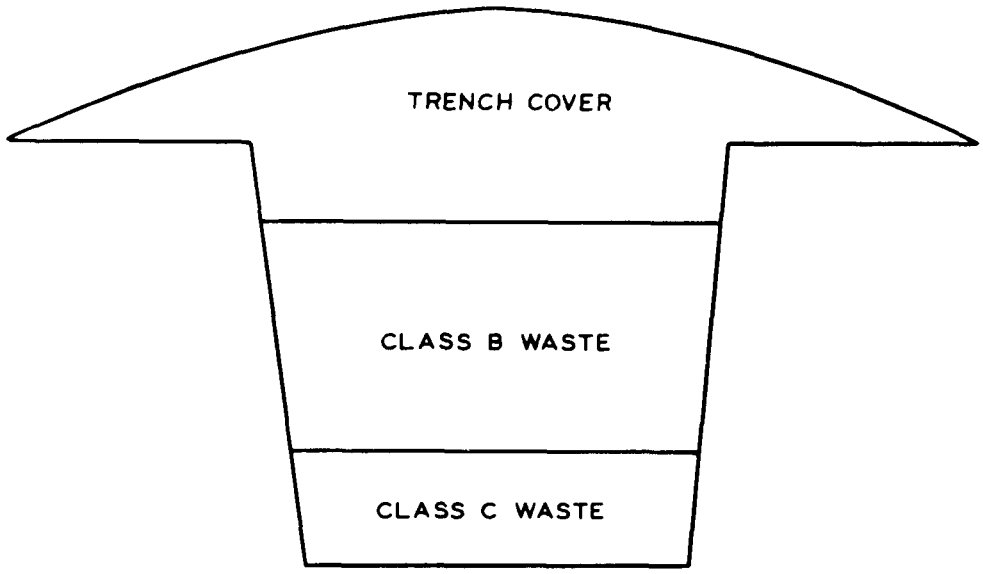

Fig. 5.6. Conceptual design of the "Russian Doll" system. Source: P. G. Tucker, 1983, Trench Design and Construction Techniques for Low-Level Waste Disposal, NUREG/CR-3144, U.S. Nuclear Regulatory Commission.

The cover soil (Fig. 5.4) is the final layer of a cover system; it should be selected to minimize active maintenance to the extent practical because it may have to function for long times (e.g., a few hundred years) after facility closure (Tucker 1983, Clar et al. 1983). Long-term stabilization of the cover soil for this system is an area of limited experience and success. The long-term stabilization of such cover has been considered at arid sites as part of the uranium mill tailings stabilization effort (Voorhees et al. 1983). Prescriptive techniques for arid sites are not available, because of difficulty in establishing and maintaining vegetation. Rock cover and revegetation have been considered, but they need to be evaluated for specific sites. While similar guidance has not been prepared for humid sites, it is equally difficult to provide a cover soil that is resistant to water and wind erosion and that requires minimal maintenance over long periods. Until sufficient experience in long-term stabilization is acquired, monitoring and maintenance will be necessary.

In summary, the disposal unit cover should be designed to isolate waste from intrusion and infiltration. Maximum use of the natural features of the site is essential to achieve this objective with the associated assurances for achieving long-term stability.

5.4. DISPOSAL SITE

Overall site design includes specification of the details for preparing the site for waste disposal operations. Site drainage, site layout, and support facilities are the primary concerns to be addressed. Various options are available to the designer in each of these areas to meet the overall performance requirements.

5.4.1 Site Layout

Site layout should be considered early in the design stage because it has a major influence on the overall efficiency and performance of the site. The plot plan for the site should identify the areas within the site boundary to be dedicated to the functions listed in Table 5.8.

Table 5.8. Functions to be considered in site layout

Waste disposal
Waste receiving
Administration
Laboratory testing and analysis
Health physics
Security control
Decontamination
Equipment storage
Inspection
Parking
Waste treatment (not generally applicable)

The topography, potentiometric surface, and geohydrologic properties of the site are important in developing the site layout, and these are rarely similar for each disposal unit at existing sites (Foster 1980, Zehner 1983, Cahill 1982). If the site has limited areas with suitable characteristics

for placement of disposal units, the disposal areas should be located first; the less suitable areas should be used for support facilities. Disposal units should be located in those areas of the site having the greatest unsaturated soil thickness to minimize the contact of water with the waste.

Once the areas for waste disposal and the buffer zone have been identified, the other functional areas, such as access to the site, waste receiving, inspection, and parking, can be designated. These areas should be identified to allow for efficient operation and minimal development costs. After these primary locations have been identified on the plot plan, the remaining facilities can be located. The administration, laboratory testing and analysis, and waste treatment facilities are located outside the security boundary that surrounds the waste disposal area. Equipment storage and decontamination facilities are located within the security boundary surrounding the waste disposal area. Health physics and a security checkpoint at the entrance to the waste disposal area can be combined into one building. An additional security checkpoint at the site boundary at the point of site access is commonly included in the plot plan. The layout of the site should also consider the needs of the transportation network and the drainage system within the waste disposal area.

Detailed generic guidelines for site layout cannot be specified because of the wide variety of site-specific considerations, but as a general guide the access and support facilities to the site should be located upgradient to the waste disposal area to minimize the disruption of the buffer zone and the natural geohydrologic characteristics. The facilities should be located to minimize the alteration of the site's natural drainage features to improve environmental monitoring and predictability of site performance. An optional schematic plot plan for a shallow land burial site is illustrated in Fig. 5.7.

5.4.2. Site Drainage

The design of the site drainage system is critical to minimizing the contact of water with the waste. The drainage system must accommodate surface water and groundwater flows for both base flow and storm flow conditions. Drainage systems must be designed to divert surface water away

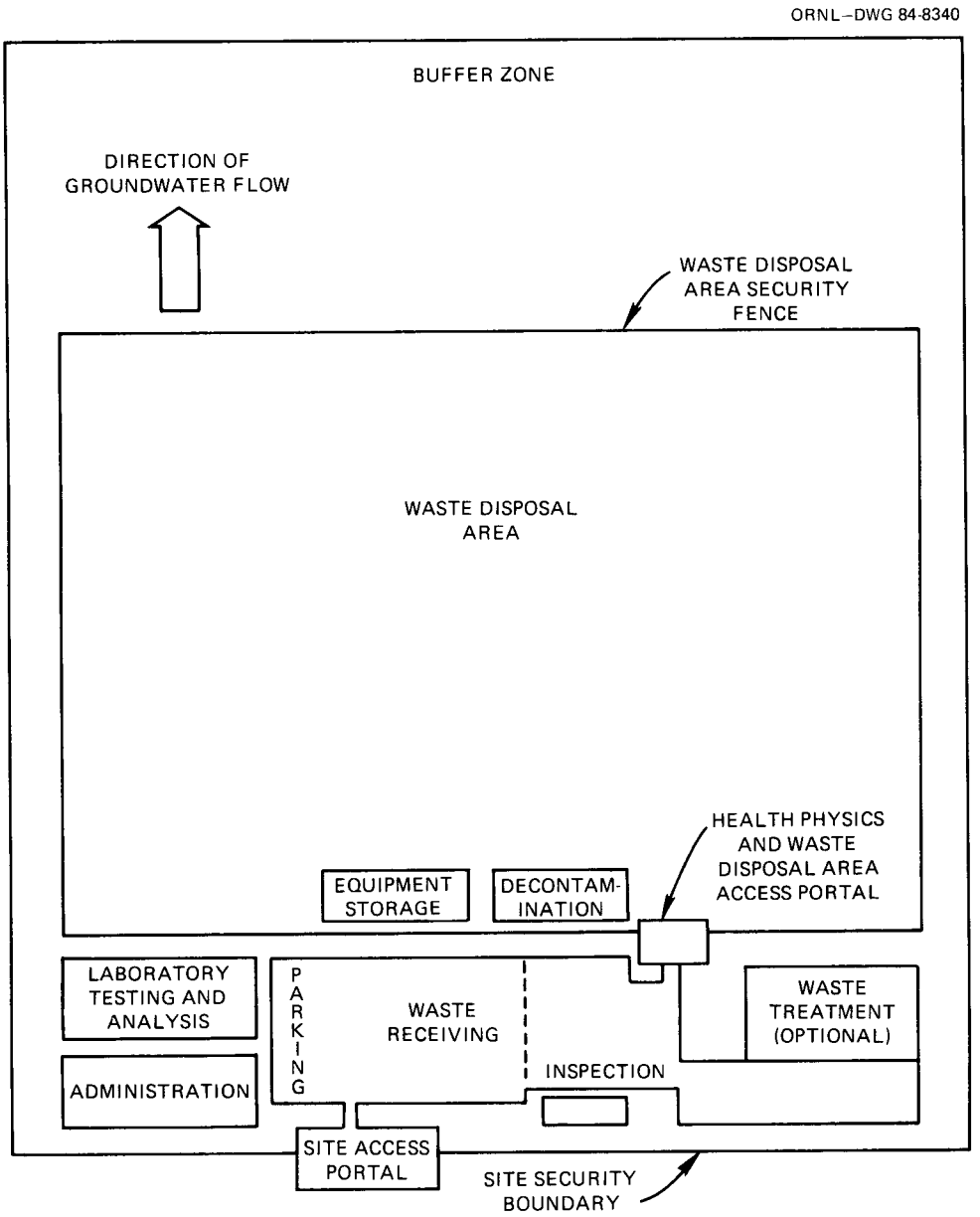

Fig. 5.7. Typical plot plan for a shallow land burial facility (not to scale).

from the disposal area at slopes and velocities that will not result in erosion or degradation of the disposal units. The existing hydrology of the site, which is determined during site characterization, provides the background for the site drainage design. Additionally, the site drainage design should provide for drainage of the waste disposal area during the excavation and filling of the disposal units as well as the drainage of the site throughout the performance period. The design of a site drainage system is site specific and is of major importance in humid areas. While drainage may not be as frequent a problem in arid areas, occasional convective thunderstorms or snowmelts must be considered. Consequently, the types of drainage problems to be expected at shallow land burial facilities will differ, but drainage should always be considered in site design.

Surface water drainage at a shallow land burial site includes the management and control of storm water runoff, snowmelt, and ephemeral streams (Siefken et al. 1982). Perennial streams should not be relocated, because of the uncertainty of maintaining the diversion over long periods of time; however, some ephemeral streams may be redirected effectively. Snowmelt and storm water runoff can be diverted by precontouring and by construction of diversion ditches and dikes. For sites with steep slopes, retention ponds and sediment-control geofabrics may be needed to control erosion. The appropriate methods for managing surface water runoff is site specific and depend on the erosion characteristics of the soil in conjunction with the site climate, topography, and geohydrology. Design features to provide rapid runoff should consider the adverse impact of excessive erosion. Parameters to be defined by the design include the location of the diversion works, the cross-sectional shape, the gradient, and the stabilization of the drainage system. The effects on groundwater from transmission losses in the drainage system should be considered in the design. Detailed guidance for designing drainage systems is included in Tucker (1983) and Clar et al. (1983).

The three types of surface water drainage systems typically used at waste disposal sites are dikes, ditches, and diversions. Dikes or berms intercept surface water runoff and divert the runoff to a more desirable discharge location. Ditches are excavated drainageways that intercept surface and near-surface water and transport the collected water to desired

outlets. A diversion is a combined ditch and dike that is used most often on long slopes to provide increased interception capacity and erosion control. Design features of a diversion are shown in Fig. 5.8. Each of these types of drainage control is considered to be a temporary technique suited for control of surface water runoff during site operations and site stabilization. When properly designed, these systems can reduce erosion and leachate generation.

Dikes are especially useful around the perimeter of a disposal unit to isolate the unit from undesired surface run-on. Dikes are typically used for intercepting small quantities of water because of their limited conveyance capacity. The upgradient face of the dike can be stabilized with geotechnical fabrics or riprap to reduce erosion of the dike. A typical design for a diversion dike is shown in Fig. 5.9

The design of ditches or channels that do not erode has been well researched and documented (Van Schilfgaarde 1974, Chow 1959). Open ditches are well suited to intercept runoff from hillsides and as outlets for tube drains. An open ditch is usually less costly than a covered drain; however, the maintenance cost for an open drain may offset this immediate cost advantage.

Groundwater control poses more problems than does surface water control. Uncertainties, such as the potential for an increase in the water table elevation from land preparation of the site, complicate the design. Site preparation may have a profound influence on hydrogeology. Land clearing and grubbing can alter the hydrogeology of a site so that large decreases in the depth to the water table and dramatic reductions in soil tension occur (Huff 1982, Romney et al. 1980). Consequently, site preparation activities that unnecessarily disturb the site may have undesirable effects on site performance as well as costs.

Subsurface drains are potentially useful for controlling groundwater elevations. The subsurface drains should be located upgradient of the area to be used for waste disposal. Such drains have been used extensively for agricultural lands (Van Schilfgaarde 1974).

Geotechnical fabrics are often used to stabilize drainage systems. These fabrics can permit increased fall lines without scour. Tucker (1983)

ORNL–DWG 84-8342

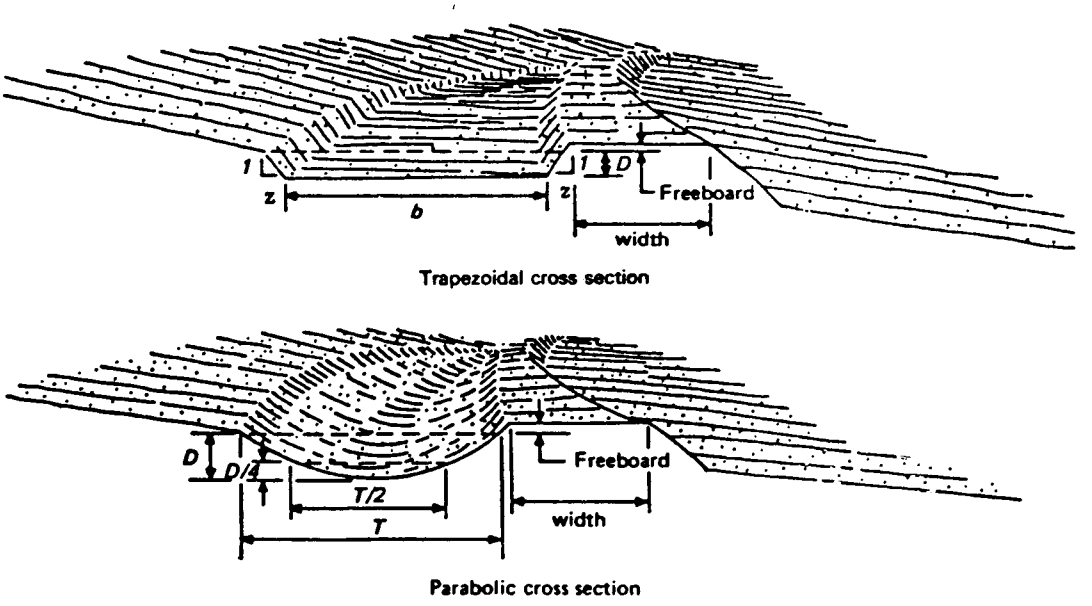

Fig. 5.8. Features of a diversion drainage system. Source: U.S. Environmental Protection Agency, 1976, Erosion and Sediment Control Surface Mining in Eastern U.S., Vol. 1: Planning; Vol. 2: Design, EPA/625/3-76-006, EPA Technology Transfer.

ORNL–DWG 84-8343

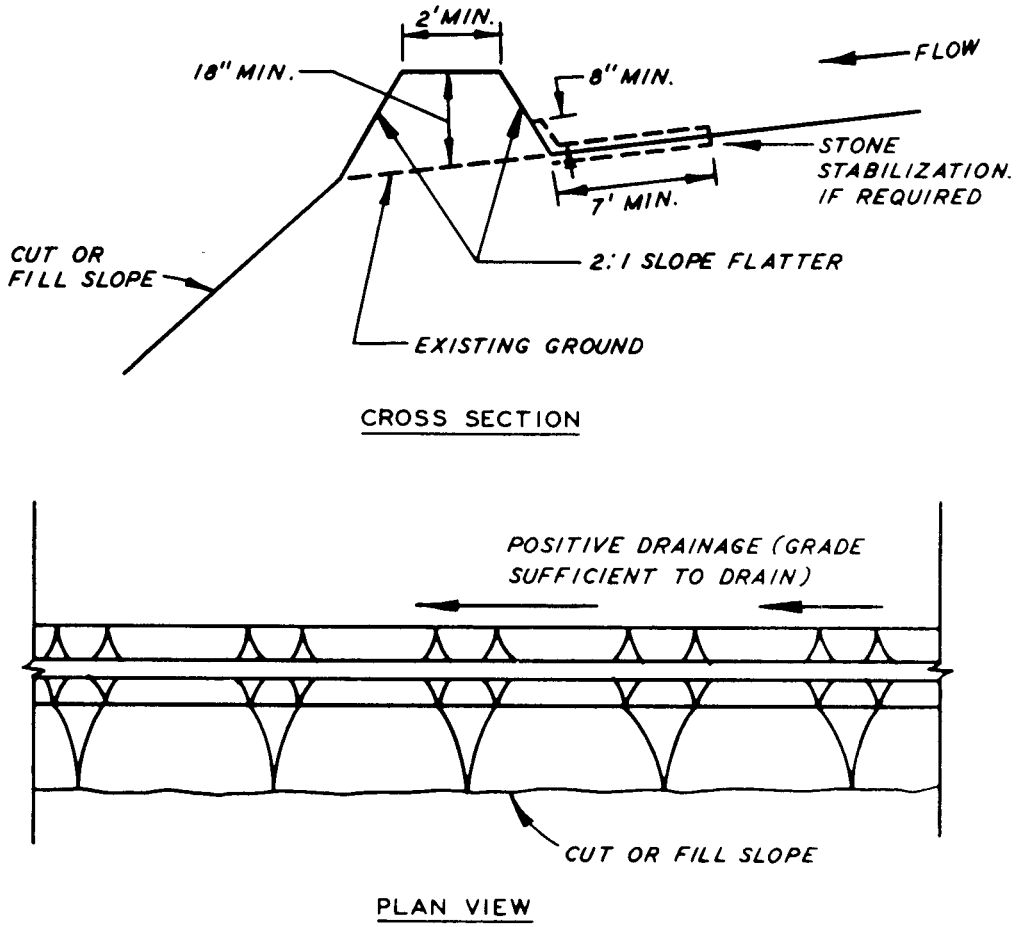

Fig. 5.9. Typical design of a temporary diversion dike. Source: U.S. Environmental Protection Agency, 1976, Erosion and Sediment Control, Surface Mining in the Eastern U.S., Vol. 1: Planning; Vol. 2. Design, EPA/625/3-76-006, EMP Technology Transfer.

has compiled an extensive listing of the availability and applications of such fabrics.

The various materials used for subsurface drains include clay and concrete tile, corrugated metal pipe, bituminous-fiber pipe, and plastic tubing. Subsurface drains can be located upslope of the waste disposal area to reduce groundwater recharge or downslope to reduce the water table elevation. The downgradient drawdown is regarded to be parallel to the original gradient at the depth of the drain. The best success in drainage has been obtained when the drain is placed on top of an impervious layer. Common types of tube drainage systems are illustrated in Fig. 5.10. These include the random, herringbone, gridiron, and interceptor systems. The random system is useful for undulating topography or sites with isolated wet areas. The herringbone system is useful for sites where the main branch can be placed beneath a topographic depression. The gridiron system is useful for flat, regularly shaped sites. The interception drain system is most useful for sloping topography with the interceptor located upslope from the site (Schwab et al. 1981).

The long-term performance of subsurface drains is not well understood; however, early installations have operated effectively and without significant degradation for nearly two decades after installation (Fouss 1974). Another technique for controlling subsurface water levels is the installation of slurry walls upgradient of the site. Slurry walls are a recent development in construction technology and utilize a bentonite wall emplaced sufficiently deep in the soil to reduce groundwater run-on. Detailed design and construction techniques are presented by Xanathos (1979). Neither of these design options has an extended historical performance record; therefore, it is not certain that they could be relied on for permanent control of groundwater. However, they would be useful for controlling groundwater effects that result from site development.

The road drainage system must also be incorporated into the overall site drainage system. Poorly drained roads could defeat an otherwise well-designed drainage system. Additionally, the road drainage system could provide the means for collecting and monitoring surface water runoff.

ORNL—DWG 84-8344

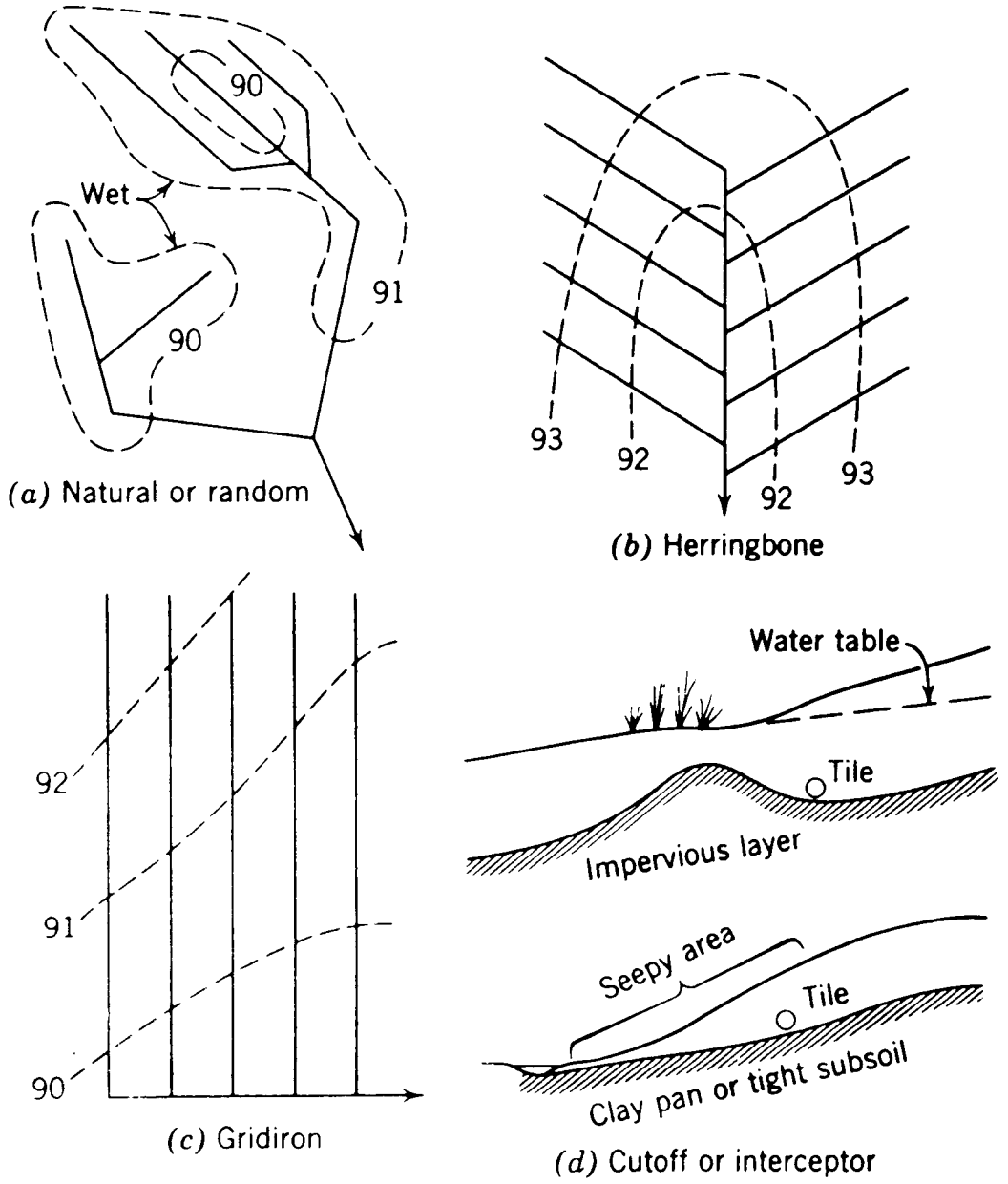

Fig. 5.10. Common types of tube drainage systems. Source: G. O. Schwab et al., 1981, Soil and Water Conservation Engineering, 3d ed., p. 321, Wiley, New York.

Guidance for designing the drainage system for the transportation network is provided in the Transportation Engineering Handbook (USFS 1977).

5.4.3. Disposal Unit Alignment and Sequencing

The orientation and order of filling of the disposal units are appropriately determined during overall site design to aid in the design of the individual disposal units. The orientation of the disposal units should be determined from consideration of the site topography, the unit location with respect to haul roads and waste-receiving facilities, and the projected size of the trench. Experience with low-level waste disposal at Oak Ridge National Laboratory has emphasized the merit of orienting disposal units so that the longitudinal axis is parallel to the ground-surface contours (Fig. 5.11) (Tucker 1983). Such an orientation reduces the possibility of runoff infiltrating the trench cover and contacting the waste by reducing the time that the runoff is in contact with the trench cover. The upslope runoff should be transported through the surface water drainage system and be prevented from collecting or ponding near the disposal units.

Disposal unit sequencing should be designed to optimize the efficiency of site operations. Factors to consider in specifying the sequence of construction and filling include waste types and volumes, access to the disposal units for delivery of waste, related construction and excavation of other disposal units, site drainage system design, and occupational exposure resulting from site operations. As a general guide, the proposed sequence of use should minimize land disturbance to promote site stability. This guideline suggests that several units should be developed in a subdivision of the waste disposal site before proceeding to a subsequent subdivision as shown in Fig. 5.12. This approach can aid in the development of the closure plan for each disposal unit and the site.

5.5 SUMMARY

The successful operation of a shallow land burial facility requires that the design take into account in a systematic fashion the

ORNL–DWG 84-8345

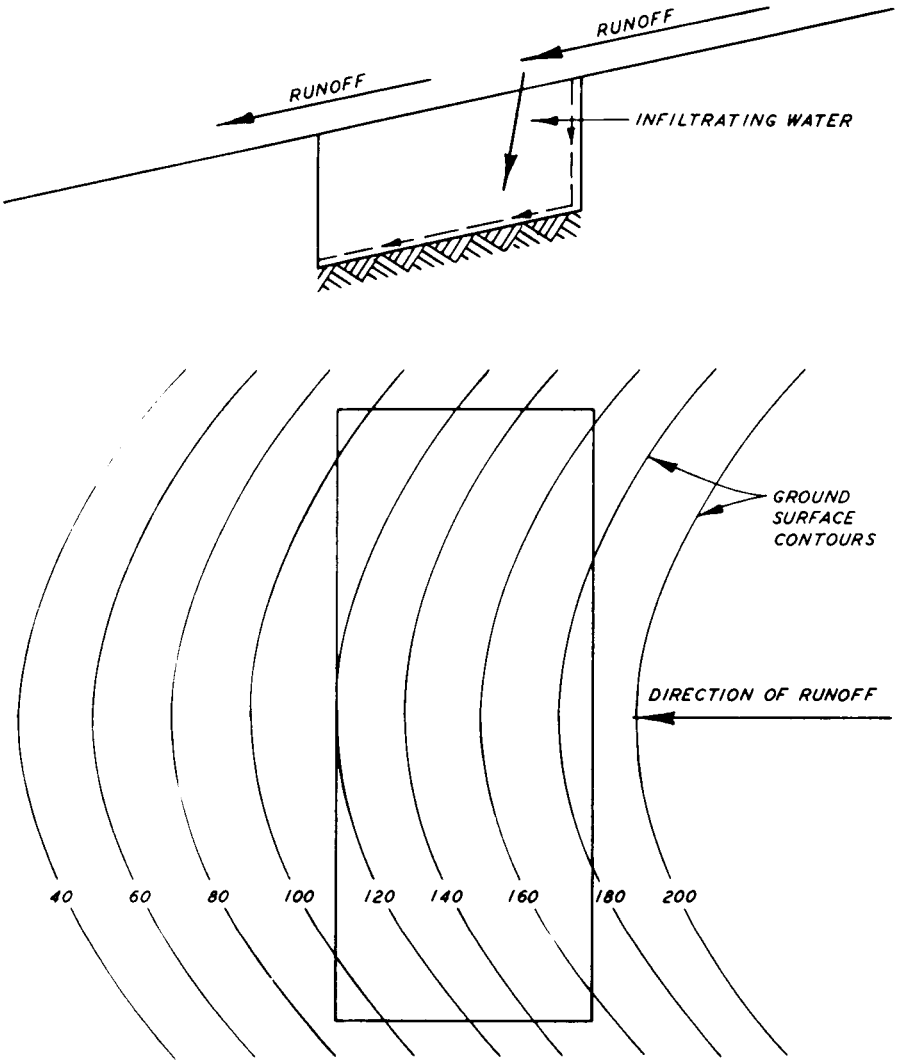

Fig. 5.11. Trench orientation for sloped topography. Source: P. G. Tucker, 1983, Trench Design and Construction Techniques for Low-Level Radioactive Waste Disposal, NUREG/CR-3144, U.S. Nuclear Regulatory Commission.

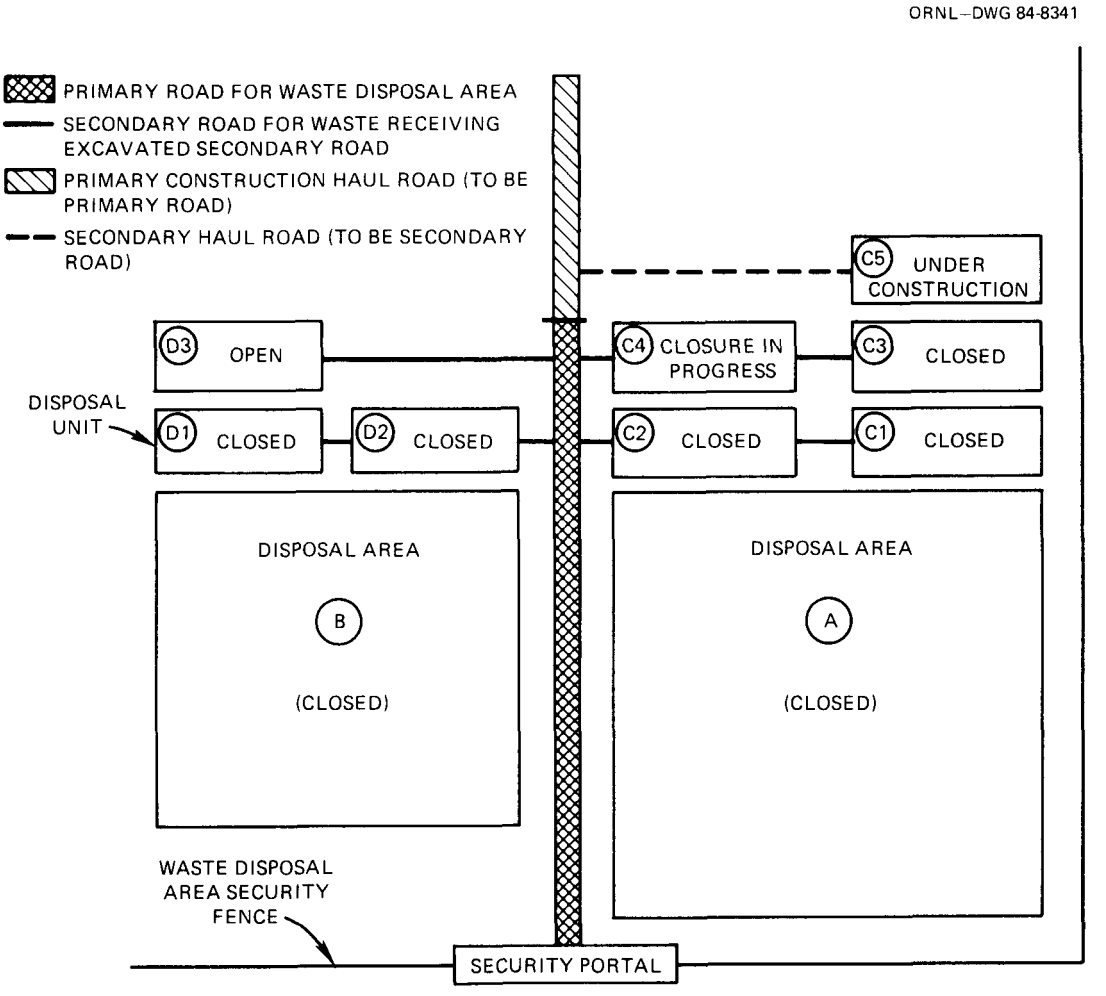

Fig. 5.12. Typical site utilization plan for a shallow land burial facility (not to scale).

characteristics of the site, the wastes to be disposed of, and the operating practices to be employed. The design should take full advantage of the favorable natural characteristics of the site and enhance the site, to the extent practicable, when the site characteristics are less than optimum. The disposal units should be designed to provide for effective long-term management of water; to limit the levels of radiation exposure; and to ensure the long-term stability of the disposal units and the site.

REFERENCES CHAPTER 5

Abeele, W. V., et al., 1983, "Shallow Land Burial Technology-Arid," p. 140 in Proceedings of the Fifth Annual Participants Information Meeting DOE Low-Level Waste Management Program (Denver), CONF-8308106, EG&G, Idaho Falls, Idaho.

Cahill, J. M., 1982, Hydrology of the Low-Level Radioactive-Solid-Waste Burial Site and Vicinity Near Barnwell, South Carolina, Open-File Report 82-863, U.S. Geological Survey.

Chow, V. T., 1959, Open Channel Hydraulics, McGraw, New York.

Clar, M., et al., 1983, Restoration Techniques for Problem Soils at Corps of Engineers Construction Sites, U.S. Army, Chief of Engineers, Instruction Report EL-83-1 (Draft).

Depoorter, G. L., et al., 1982, "Shallow Land Burial Technology Development-Arid," in Proceedings of the Fourth Annual Participants Information Meeting DOE Low-Level Waste Management Program (Denver), ORNL/NFW-82/18, Oak Ridge National Laboratory, Oak Ridge, Tenn.

DOE (U.S. Department of Energy), 1984, Corrective Measures Technology for Shallow Land Burial, DOE/LLW-13Te, National Low-Level Radioactive Waste Management Program, EG&G, Idaho Falls, Idaho.

DOI (U.S. Department of the Interior), 1974, Earth Manual, Water and Power Resources Service.

Foster, J. B., and J. R. Erickson, 1980, Preliminary Report on the Hydrology of a Low-Level Radioactive-Waste Disposal Site Near Sheffield, Illinois, Open-File Report 79-1545, U.S. Geological Survey.

Fouss, J. L., 1974, "Drain Tube Materials and Installation," in Drainage for Agriculture, ed. Van Schilfgaarde, American Society of Agronomy, Madison, Wis.

Hakonson, T. E., et al., 1982, "Remedial Action Technology-Arid," in Proceedings of the Fourth Annual Participants Information Meeting DOE Low-Level Waste Management Program (Denver), ORNL/NFW-82/18, Oak Ridge National Laboratory, Oak Ridge,Tenn.

Herzog, B. L., et al., 1982, A Study of Trench Covers to Minimize Infiltration at Waste Disposal Sites, NUREG/CR-2478, U.S. Nuclear Regulatory Commission.

Huff, D. D., 1982, "Hydrologic Factors and Sr-90 Transport at a Low-Level Waste Disposal Site," pp. 349-56, in Waste Management 82; Waste Isolation in the U.S. and Elsewhere, ed. R. G. Post, Technical Programs of Public Communications, Vol. 2, University of Arizona, Tucson.

Jones, C. W., 1983, "Frost Inducing Slides on Membrane-Lined Canal Slopes," Civ. Eng. 53(11).

McCray, J. G., et al., 1983, Low-Level Nuclear Waste Shallow Land Burial Trench Isolation, NUREG/CR-3084, U.S. Nuclear Regulatory Commission.

Reed, A. W., et al., 1983, Evaluation of NEPA-Based Environmental Commitments at Four Geopressure Design Wells, ORNL/TM-8657, Oak Ridge National Laboratory, Oak Ridge, Tenn.

Romney, E. M., R. B. Hunter, and A. Wallace, 1980, Vegetation Management and Recovery at Sites Disturbed for Solar Thermal Power System Development, UCLA 12-1281, University of California, Los Angeles.

Roop, R. D., et al., 1983, A Review of Corrective Measures to Stabilize Subsidence in Shallow-Land Burial Trenches, ORNL/TM-8715, Oak Ridge National Laboratory, Oak Ridge, Tenn.

Schwab, G. O., et al, 1981, Soil and Water Conservation Engineering, 3d ed., Wiley , New York, p. 321.

Shraeder, E. K., personal communication to D. W. Lee, Aug. 17, 1983.

Siefken, D., G., et al., 1982, Site Suitability, Selection and Characterization, NUREG-0902, U.S. Nuclear Regulatory Commission.

Spangler, M. G., and R. L. Handy, 1982, Soil Engineering, McGraw, New York.

Tucker, P. G., 1983, Trench Design and Construction Techniques for Low-Level Radioactive Waste Disposal, NUREG/CR-3144, U.S. Nuclear Regulatory Commission.

USFS (U. S. Forest Service), 1977, Transportation Engineering Handbook, FSH 7709.11.

Van Schilfgaarde, J., 1974, Drainage for Agriculture, American Society of Agronomy, Madison, Wis.

Voorhees, L. D., et al., 1983, Guidance for Disposal of Uranium Mill Tailings: Long-Term Stabilization of Earthen Cover Materials, NUREG/CR-3199, ORNL/TM-8685, Oak Ridge National Laboratory, Oak Ridge, Tenn.

Xanathos, Petros P., 1979, Slurry Walls, McGraw, New York.

Zehner, H. H., 1983, Hydrogeologic Investigation of the Maxey Flats Radioactive Waste Burial Site, Fleming County, Kentucky, Open-File Report 83-133, U.S. Geological Survey.

6. DISPOSAL SYSTEM OPERATIONS

Activities carried out at a shallow land burial facility include receipt of waste shipments, preparation of disposal units, emplacement of waste, closure of disposal units, and maintenance of the closed units. These activities are conducted in a manner to achieve the performance objectives for shallow land burial.

6.1 OBJECTIVES

The primary purpose of disposal system operations is to safely dispose of waste such that the public health and safety are ensured by carrying out the design requirements. Regulations have been promulgated to set standards for safe disposal of low-level radioactive wastes by isolating them from people and the environment until the radioactivity has decayed to nonhazardous levels. The current regulatory approach recognizes that absolute containment and isolation are neither achievable nor necessary (Sect. 2.3). Performance standards have been established that allow for controlled releases provided that the resultant radiation dose commitments do not exceed specified levels.

The major emphasis at a shallow land burial facility is to minimize leaching and subsequent migration of radioactive contaminants contained in the waste, protect the workers, and enhance the long-term stability of the disposal units. To achieve these objectives, the disposal system operations should include activities that meet the following requirements.

- Minimize the contact of water with the waste. Design features to minimize the contact between water and waste are discussed in Chapter 5. During operation of the disposal facility, design features should be built and operated so that they function as designed. The design features should be complemented with operating practices that minimize damage to the design features, maintain the design features in good repair, and supplement the design features.

- Protect the workers from unnecessary exposures to ionizing radiation. The waste should be received, off-loaded, and emplaced as expeditiously as possible using techniques that limit radiation exposures to as low as reasonably achievable.

- Protect the disposal unit against biotic intrusion. During site operations, maintenance activities should prevent deep-rooted plants from growing on closed disposal units and protect the disposal units from burrowing animals.

- Promote the long-term stability of the disposal units and the site. Long-term stability of the individual disposal units and of the site should be enhanced by selecting operational procedures that not only minimize damage to closed units but also contribute to their long-term stability.

Achieving the objectives of site operations requires that an operations plan be developed and adhered to throughout the life of the facility. This plan should include the construction, operation, and closure activities. The components of the operations plan are given in Table 6.1.

During site operations, new disposal units will be under construction. Construction of new units should not reduce the stability of units that are being, or have been, filled. Earthen material excavated during construction of a new disposal unit may be useful as backfill for an operational unit or as surcharge on a closed unit (Sect. 5.3.3).

6.2 SITE PREPARATION AND DISPOSAL UNIT CONSTRUCTION

Site preparation and disposal unit construction are significant activities throughout site operations. Site preparation includes land clearing, road construction, and drainage control. Disposal unit construction includes the excavation of the disposal unit, installation of drainage for the disposal unit, and the completion of the disposal unit with monitoring wells, sidewall finishing, and sidewall protection as called for in the design.

Extensive land clearing provides easy use of the site, improved security, and reduction of biotic intrusion into the waste. Clearing and grubbing are necessary in the areas where disposal operations are to be performed, but unnecessary extensive clearing of the site may increase the potential for erosion, increase site runoff, and increase the need for stabilization of the site. Clearing of a site may cause the groundwater elevation to rise substantially and reduce the soil thickness available for

Table 6.1. Components of operations plan

Construction
Codes and standards
Methods of construction
Quality control
Administrative control
Operations activities
Methods of waste emplacement
Procedures for waste segregation
Traffic control
Methods for waste storage
Waste acceptance criteria
Quality control
Radiation safety
Administrative control
Security control
Closure activities
Methods of disposal unit closure
Site maintenance
Survey control
Quality control
Site monitoring
Administrative control

disposal above the water table. At arid sites, land clearing has reduced the soil tension dramatically. Land clearing in the projected buffer zone may be undesirable at some sites because of the potential reduction in the capacity of the buffer zone to contain migration of contaminants within the site boundary. Finally, any unnecessary clearing of a site increases costs and may increase the amount of maintenance required during and after site operations.

Precontouring of the site by regrading the site to a uniform slope provides for more uniform runoff, reducing areas with steep slopes and areas that tend to collect stormwater. However, precontouring introduces areas where the consolidation of soils would not be uniform, an increased need for stabilization of the soils prior to site operations, and the potential for increased sheet erosion by the exposure of large areas without vegetation. Additionally, the groundwater regime could be altered such that the areas of adequate soil thickness suitable for disposal might be reduced.

Disposal unit excavation can be completed before waste emplacement or incrementally as needed during waste emplacement. Complete excavation of a disposal unit before use is best suited for small trenches and at sites within restricted land areas. This also permits better control over disposal unit drainage and makes it easier to incorporate additional engineered features in the disposal unit. Incremental excavation is well suited to large trenches and at large shallow land burial sites. The major disadvantages are the potential increase in radiation exposure to equipment operators and a reduction in effectiveness of disposal unit drainage control. There may also be increased operational conflict with the simultaneous operation of excavation and waste disposal equipment.

The disposal unit is completed by placing capillary barriers, liners, floor drains, monitoring wells, trench floor access, and sloped trench floors using standard earthwork construction methods. These features are easier to add to disposal units that have been completely excavated prior to waste emplacement. Incremental excavation makes the maintenance of quality assurance of these features of the disposal unit difficult.

The methods selected for construction of a shallow land burial facility influence the selection of equipment (Table 6.2), the extent of subcontracting, the overall costs of facility construction and operations,

Table 6.2. Construction equipment and applications for shallow land burial

Type of equipment	Primary function	Major applications	Advantages	Disadvantages
Pan scraper	Excavation and hauling at working level	Trench excavation Cover emplacement Site preparation Road building Hauling Backfilling	Performs both excavation and hauling Unload in even lifts Excavated areas are easily compacted Versatile with multiple applications for shallow land burial construction	Unsatisfactory for soft materials Pusher tractor needed for loading some soils
Power shovel	Excavation above working level	Trench excavation Site preparation	Can excavate hard materials Rapid excavation up to 90 m^3 per hour per m^3 of bucket capacity	Requires accurate truck spotting when loading Excavates hard materials in large chunks Limited versatility for shallow land burial construction
Dragline	Excavation below working level	Trench excavation Site preparaton Backfilling	Especially effective for excavating soft materials Useful as crane during operations	Slow excavation Cannot excavate hard materials
Grader	Excavation at working level	Disposal unit completion Cover emplacement Trench excavation Road building	Rapid excavation in uniform soils	Inefficient with cobbles and sands Limited versatility for shallow land burial operations
Crawler dozer	Excavation at working level	Trench excavation Cover emplacement Site preparation Disposal unit completion	Versatile with many applications to shallow land burial construction Complements the use of scrapers for excavation Effective in heavy soils	Not as effective as loaders for covering Slower than rubber-tired dozers
Crawler loader	Excavation at working level	Trench excavation Cover emplacement Site preparation Backfilling Disposal unit completion Hauling	Versatile with many applications to shallow land burial construction Effective in heavy soils	Slower than rubber-tired loaders

Table 6.2. (Continued)

Type of equipment	Primary function	Major applications	Advantages	Disadvantages
Rubber-tired loader	Hauling and handling at working level	Backfilling Hauling Cover emplacement Excavating Site preparation Disposal unit completion	Versatile with many applications to shallow land burial construction and operation	Reduced effectiveness in heavy soils
Backhoe	Excavation and material handling	Drainage systems Trench excavation	Versatile with many applications for shallow land burial construction and operations Can be combined with loader	Limited capacity
Sheepsfoot roller	Compaction of fine-grained soils	Road building Site preparation Cover emplacement	Mixes soil effectively Produces good bond between lifts Breaks down soft rocks during compaction	Leaves rough surface susceptible to infiltration Compacts to shallower depth than other equipment Not suitable for coarse-grained soils
Rubber-tired roller	Compaction of coarse-grained soils and cohesive soils	Road building Site preparation Cover emplacement	Compacts to greater depth than sheepsfoot roller Effective with cohesive soils of large grain size Provides smooth, infiltration-resistant surface	Scarification of surface required between lifts Not as effective in mixing soils or crushing rocks
Steel-wheeled roller	Compaction of cohesionless materials	Road building Cover emplacement Site preparation	Effective for subgrade compaction Deeper compaction than rubber-tired rollers	Ineffective with well-graded or silty sands
Vibratory compactor	Compaction of cohensionless materials	Backfilling Cover emplacement Road building	Greater densities than other equipment Water added improves compaction	May cause degradation of soil or rock fill particles
Landfill compactor	Compaction of poorly consolidated material	Backfilling Cover emplacement	Mixes unconsolidated material Operates effectively on poorly consolidated material	Leaves rough surface subject to infiltration Limited material versatility

and the performance of the site. The selection of construction methods most appropriate for a site can optimize the integrity of the disposal units, the use of site soils, and the efficiency of site operations.

The construction of a shallow land burial facility largely involves earthwork. The knowledge, experience, good judgment, responsibility, and authority of those engaged in the administration and inspection of earthwork are extremely important. These requirements have not been met on so many occasions in the past that every authority on earthwork has commented on the problem at one time or another (DOI 1974). Thus, good quality control is mandatory. During the construction of the disposal units, recognition of the conditions that do not conform to the design basis is important so that appropriate design modifications can be made. This recognition requires close cooperation among designers, construction management, and operations personnel. Quality assurance personnel who can routinely oversee construction activities can greatly assist in observing the actual field conditions encountered during construction.

6.3 WASTE ACCEPTANCE

Disposal operations at the site begin with receipt and inspection of waste shipments and may include temporary surface storage of the waste package before burial. Disposal facility operators also generally require waste generators to ship their waste at an agreed upon time. The pathways analysis and regulatory guidance are used to develop waste acceptance criteria for the facility. These criteria should specify, as a minimum, the maximum acceptable activity level of the waste, radiation level at the surface of the container, container type, stability of the container, recordkeeping requirements, and volumes of the different types of wastes. There may be some shipments or packages that require special handling because of high radiation exposure levels or because of their unusual shape. These materials that require special handling must be identified so they can be scheduled for placement in special disposal units or into a special section of an operating disposal unit.

The objectives of waste receiving operations are to

- o receive the waste shipments in a safe and orderly fashion;

- Verify by inspection that shipments meet all criteria for acceptance; and
- Identify which waste packages, if any, require special handling to protect the operating personnel from unnecessary exposures to ionizing radiation and to ensure that the waste package is directed to the appropriate disposal unit.

Advance scheduling of waste shipments helps prevent congestion at the receiving facility, minimizes the need for interim storage of wastes, and tends to level the work load for site operations. These results allow more cost-effective use of personnel and facilities and reduce the potential for inadvertent releases of radioactive materials and radiation exposures from shipments waiting for disposal.

The principal method of transporting low-level radioactive waste from the generator to the disposal site is by truck. Special shipments may be made by rail or barge, but these methods are less convenient and are seldom used. Trucks have the advantage over other forms of transportation because they are able to pick up waste at any location, require no enroute transfer of waste, and can be conveniently driven to the disposal unit where the waste can be taken from the trailer and placed directly into the unit with a minimum of handling. Figure 6.1 shows a truck used for transporting low-level waste to a DOE disposal site; Fig. 6.2 shows one type of commercial truck that delivers higher activity waste in a cask to a commercial disposal site.

Each shipment received at the disposal facility should be inspected and monitored, and the shipping records should be inspected to verify that they are complete and correct. Incomplete or incorrect shipping records are a common problem at commercial waste disposal sites, especially for shipments from infrequent users. Figure 6.3 shows a standard radioactive shipment record form. The Nuclear Regulatory Commission (10 CFR Part 61) requires a manifest paper system to be developed for both external and internal shipment to the disposal site for commercial facilities. Information on receipt of wastes must include factors pertinent to the segregation and handling of the material.

ORNL PHOTO 4983-80

Fig. 6.1. Low-level waste transport truck at Oak Ridge National Laboratory, Oak Ridge, Tennessee.

ORNL PHOTO 3845-81

Fig. 6.2. Commercial trucks at Barnwell, South Carolina.

SHIPPER: _____

ADDRESS: _____

PHONE: _____

SHIPMENT NO.: _____

DATE OF SHIPMENT: _____

CARRIER: _____

NO. 4064 PAGE ____ OF ____

☐ _____

TOTAL QUANTITY	PROPER SHIPPING NAME & HAZARD CLASS (PER 49 CFR 172.101)		TOTAL WEIGHT IN POUNDS
	Radioactive Device, N.O.S.	– Radioactive Material	
	Radioactive Material, Fissile, N.O.S.	– Radioactive Material	
	Radioactive Material, Low Specific Activity, N.O.S.	– Radioactive Material	
	Radioactive Material, N.O.S.	– Radioactive Material	
	Radioactive Material, Limited Quantity, N.O.S.	– Radioactive Material	
	Radioactive Material, Special Form, N.O.S.	– Radioactive Material	

(1) Item No	(2) Cubic Feet	(3) Weight (Pounds)	(4) Physical Form	(5) Chemical Form	(6) Radionuclide	(7) Special Nuclear Material (Grams)	(8) Source Material (Kilograms)	(9) Activity [ ] Curies [ ] Millicuries	(10) Radiation Levels MR/HR Surface	3 Feet	(11) Transport Group	(12) Transport Index	(13) Label	(14) Fissile Class	(15) Type of Container
													Radioactive –		
													Radioactive –		
													Radioactive –		
													Radioactive –		
													Radioactive –		
													Radioactive –		
													Radioactive –		
													Radioactive –		
													Radioactive –		
													Radioactive –		
													Radioactive –		
													Radioactive –		
													Radioactive –		
													Radioactive –		
													Radioactive –		
				TOTALS											

THIS IS TO CERTIFY THAT THE ABOVE NAMED MATERIALS ARE PROPERLY CLASSIFIED, DESCRIBED, PACKAGED, MARKED AND LABELED AND ARE IN PROPER CONDITION FOR TRANSPORTATION ACCORDING TO APPLICABLE REGULATIONS OF THE DEPARTMENT OF TRANSPORTATION.

Authorized Signature *Title*

THIS IS TO CERTIFY THAT ARTICLES ARE IN COMPLIANCE WITH ALL REGULATIONS APPLICABLE AT THE DESIGNATED DISPOSAL SITE.

Authorized Signature *Title*

Fig. 6.3. Standardized radioactive shipment record form. Source: U.S. Nuclear Regulatory Commission, 1981, Draft Environmental Impact Statement on 10 CFR Part 61, Licensing Requirements for Land Disposal of Radioactive Waste, NUREG-0782, Vol. 3, Fig. E.13.

The incoming packages should be surveyed with a Geiger-Muller (G-M) counter to measure the external radiation exposure rate at the surface of the package. The surface of the package should be smeared for removable contamination; the smears can be assayed with a low-level beta-gamma counter. If the package has been damaged or if there is evidence of leakage, it should be probed with an alpha detector.

Waste shipments should be weighed prior to disposal on a standard truck scale. Data concerning the weight of the waste are needed to verify shipping papers and can be used to evaluate the efficiency of the overall waste disposal operation.

6.4 WASTE HANDLING AND EMPLACEMENT

Waste handling and emplacement include the operations carried out in unloading waste shipments and placing the wastes into disposal units. The primary objectives are to protect the safety of workers by conducting the operations as planned, to minimize the contact of water with the waste, and to maximize the long-term stability of the site. Direct handling of the waste packages by operating personnel should be minimized. Special shielding and minimum practicable handling times should be used for packages that generate high rates of external radiation exposure. The waste packages should be emplaced according to applicable classification requirements and in reference to a three-dimensional locator system. The three-dimensional locator system can be used to identify the location of each shipment of waste. Also, the waste packages should be emplaced so as to make efficient use of disposal unit space and to enhance its long-term stability. These operations will vary, depending on waste acceptance criteria and facility design.

In large disposal units, waste emplacement should begin at the upslope end of the disposal unit and progress toward the downslope end. This will reduce the chance of waste packages standing in contact with water if the disposal unit drainage system fails or heavy rainfall occurs while the disposal unit is open and the waste is exposed. Waste emplacement should be halted during severe thunderstorms to further reduce the contact of water with exposed wastes. In the case of very short disposal units, where the

length is approximately equal to the width, the disposal unit is simply filled from the bottom up to the maximum allowable height, which is determined by the thickness of cover material that will be used.

Mechanized transfer of large waste packages is universally made at operating disposal sites. If packages arrive at the site in a condition suitable for direct disposal (not packaged in reusable shielding containers), either a forklift or a crane is used to remove the packages from the truck and emplace them into the trench. Since waste may be stacked in relatively deep disposal units, 7 to 10 m deep, forklifts driven along the bottom of the disposal unit may not be able to stack the waste to the necessary height. A crane operating from the side of the disposal unit may be necessary to complete the stacking operation.

If the disposal units are large and the bottom and sidewalls are stable, trucks can be driven onto the floor of the disposal unit, where the packages are removed from the truck with a forklift and placed into position. This method is efficient with respect to both the time required for off-loading and emplacement and for space utilization. However, the bottom of the disposal unit must be able to accommodate the heavy trucks and be stable enough to prevent the waste packages from toppling after they have been stacked and before they are covered. Personnel must operate at the bottom of the disposal units; hence, sidewall stability is of particular concern with respect to industrial safety. The height of stacking is limited by the safe reach of the forklift.

In most cases, packages are unloaded from trucks at the side of the disposal unit, and a crane lifts and places the packages into position. The reach of the crane limits the width of the disposal unit in this case. Figure 6.4 shows stacking of waste packages in a typical disposal unit at the Barnwell, South Carolina, commercial disposal facility. This method does not require personnel to work at the bottom of the disposal unit during off-loading and emplacement; thus, there is less concern for industrial safety because of sloughing of the sidewalls. However, the sidewalls should be protected from sloughing during operations since degraded sidewalls make the installation of a stable cover difficult (Sect. 6.5). Moreover, heavy equipment must not be operated too close to the sidewall of the disposal unit or on the drainageways associated with the unit. If the bottom of the

ORNL PHOTO 3853-81

Fig. 6.4 Stacking of waste packages in a typical trench at Barnwell, South Carolina.

disposal unit is stable and cohesive, the waste packages can be stacked for the most efficient use of space. At the Richland, Washington, disposal facility, rectangular waste packages are used to create a stable "dam" across the disposal unit. Waste drums are then lowered into a stable position on the upslope side of the "dam." This makes less efficient use of the space than orderly stacking and makes void reduction in backfilling more difficult, but it reduces the chance of a package breaking open because of toppling.

In some special cases, it may be acceptable to dump wastes directly from a truck into the disposal unit. This simplifies the equipment requirements for waste emplacement but threatens the sidewall stability of the disposal unit and the integrity of the waste packages. Additionally, random dumping of waste containers does not make efficient use of the disposal volume and makes it difficult to fill the void spaces and achieve long-term stability of the disposal unit.

To minimize voids between emplaced packages, layered backfilling can be used. The packages would be placed in layers instead of stacks or randomly dumped into the disposal unit. Each layer of packages would be backfilled as it is laid down. This procedure reduces void spaces between the packages, and compaction is improved before further operations are conducted in laying down the next layer. Layered backfilling reduces the radiation exposure levels at the top of the disposal unit and protects the waste from exposure to weather conditions while the disposal unit is being filled. It also reduces subsequent problems with subsidence. However, layered backfilling may compromise the structural integrity of the waste packages or reduce the available disposal volume in the units.

A shielded waste shipment requires special care during the off-loading procedure. The shielded cask is opened at the side of the disposal unit, and a crane is hooked to the liner, either manually or by means of remotely operated tools if the activity level is too high for manual hookup. In either case, the liner is removed from the shipping cask and placed in the disposal unit as quickly as possible in a stable position and immediately covered with backfill. At some sites, such packages are placed into vertical auger holes. At the Barnwell, South Carolina, disposal site, slit trenches are used for disposal of unpackaged, irradiated components with

high external radiation exposure rates (Sect. 5.3.1). The shielded shipping container is positioned near the disposal unit to minimize the time required for emplacement and backfill operations.

6.5 DISPOSAL UNIT CLOSURE

A disposal unit is considered closed after the disposal unit has been filled with waste, the backfill and cover are in place, and procedures have been undertaken to ensure that the unit remains stable over the long term. Experience with disposal unit closure has not provided an approach that guarantees long-term stability, but current research that emphasizes cover design is providing additional information on the important characteristics of effective closure (McCray et al. 1983). However, long-term performance and maintenance requirements for these approaches are not yet available.

Disposal units can be backfilled by either of two methods. The method most commonly used for small disposal units is to backfill the disposal unit with a front loader after the unit has been filled. Draglines may be necessary where sidewall stability is a major concern. Backfilling is continued until the waste has been covered and compacted and the design depth has been achieved. For large disposal units, the unit is backfilled while waste is being emplaced to reduce the time the waste is left uncovered. For large units, front crawler loaders and crawler dozers are typical equipment. Landfill compactors or other compacting equipment are typically used in backfilling to reduce void spaces to the greatest degree practicable to minimize subsidence.

The cover is emplaced by the appropriate layers specified in the cover design (Sect. 5.3.4). The design elevation and cover configuration is achieved typically with crawler dozers, graders, and scrapers. As with backfilling, cover emplacement can be performed in a single operation or as a continuous operation during waste emplacement. For small disposal units, the entire unit is covered in one step, while the continuous emplacement method is commonly used for large disposal units. To optimize performance, the final disposal unit cover should be continuous without faulty seams or incomplete coverage.

After the disposal unit cover is in place, the disposal unit cover is graded for effective drainage and stabilized to control erosion and subsidence. A layer of topsoil is added and planted with a shallow-rooted cover crop, such as an indigenous species of low-maintenance grass, as a typical stabilization measure (Romney et al. 1980). The cover crop should be planted as soon as practicable after closure to take advantage of the soil-stabilizing power of the root system and the added benefit of transpiration that removes water from the soil and lessens the rate of infiltration. Revegetation may be difficult at arid sites; if vegetation cannot be sustained, the surface can be covered with riprap or cobble to reduce erosion. Guidance for stabilizing problem soils is given in Clar et al. (1983). With adequate stabilization and preparation for closure, maintenance during the institutional-care period should be minimal.

At the Barnwell, South Carolina, disposal site, several disposal units are grouped together to form an area that is covered as a unit after all the individual disposal units have been closed. The area cover, which overlaps all the trenches, consists of 0.6 m of clay covered by 0.9 m of soil. This area cover is then graded prior to final vegetation and stabilization (Chem-Nuclear Systems, 1980).

Closing disposal units so that heavy equipment can operate over them will facilitate efficient use of the site because less space is required between units. If heavy equipment is operated on closed units, the cover should be inspected frequently and repaired as necessary.

Each disposal unit corner should be marked with a cornerstone. A suitable marker (e.g., granite with attached bronze plate) should be installed at each disposal unit and used for recording information such as waste volume, amounts of special nuclear and source material, total activity, trench completion date, and identification number. This information should be a part of the permanent written records and be in a form that can be directly correlated with permanent records of waste shipments. It should also be referenced to U.S. Geological Survey or National Geodetic Survey benchmarks.

After a disposal unit has been backfilled and covered, the soil compacts and consolidates. The closed units should be inspected frequently

to determine if maintenance is needed. Visual inspection, radiation surveys, and engineering surveys can be used to detect subsidence.

6.6 RADIATION MONITORING PROGRAM

An operational radiation-monitoring program is essential to ensure the safety of all personnel involved in on-site operations and to protect off-site populations from significant radiation exposures. The operational monitoring program has three main objectives: (1) monitoring of vehicles and waste packages when they enter the site to ensure that waste shipments meet the relevant packaging and shipping regulations, and of vehicles when they leave the site; (2) monitoring of personnel to protect employees from exceeding radiation exposure limits; and (3) monitoring of radioactivity in air, water, soil, and biota to detect migration of radionuclides from the disposal site. The purpose of the program is to verify compliance with regulatory standards and performance criteria, to identify any significant migration of radionuclides so that corrective actions can be implemented, and to provide information to improve the understanding of site performance. Both personnel and environmental monitoring programs should be designed to accurately determine radioactivity levels and resultant radiation doses from both routine operations and accidental situations.

A monitoring plan should be developed for each site on the bases of the quantities and characteristics of the radioactive materials expected at the site and the potential pathways for long-term release of nuclides to the environment. The monitoring system should be designed to measure and document radiation doses to personnel, to detect the magnitude of releases from any accident conditions, and to develop data that will facilitate prediction of long-term release of nuclides via migration in groundwater or other pathways to the public. The monitoring system should provide early warning of radionuclide migration from the disposal units before the nuclides leave the site boundary. Plans must be in place for taking corrective actions in case of such migration.

6.6.1 Personnel Monitoring

Personnel exposures should be kept as low as reasonably achievable and in compliance with occupational exposure standards. The external radiation from wastes and the duration of exposure are the principal determinants of dose from direct gamma irradiation. Internal exposures may also occur through inhalation of airborne radioactive particulates or radioactive gases emanating from the disposal site or by absorption of nuclides (e.g., tritium) through the skin.

Personnel monitoring is achieved by assigning exposure-measuring devices--such as film badges, pocket ion chamber dosimeters, thermoluminescent dosimeters (TLDs), and film rings for measuring extremity dose--to employees who enter radiation zones. These devices must be calibrated and examined for exposure on a regular basis, and the exposure data must be maintained in permanent records.

All entry and exit points to disposal and storage areas must be controlled and equipped with radiation survey instruments and have a health physics staff. All equipment and personnel leaving the restricted area should be surveyed with a G-M probe to detect beta-gamma contamination. Additionally, the site grounds, buildings, and equipment should be surveyed periodically with G-M probes to detect removable contamination and fixed radioactivity. Any radioactive contamination in excess of established limits must be removed, and the source of the contamination must be identified and corrected.

These measures should be supplemented by an air-monitoring system within the work area to detect airborne radioactivity. The system devices generally filter air at a constant flow rate; the filters can be directly assayed by a detector and/or removed and analyzed periodically.

Periodic bioassays, such as whole-body counting and analysis of urine or blood samples, should be conducted to detect internal radiation exposures and associated body burdens of radioactive materials. These procedures should be performed at regular intervals for all personnel working in restricted areas as well as whenever there is any indication that an employee may have inhaled or ingested radioactive materials.

6.6.2 Environmental Monitoring

Environmental monitoring must be conducted to detect potential off-site releases of radioactivity and to improve prediction of long-term radionuclide migration. The program should include monitoring of air, soil, surface water, groundwater, and biota. Potential pathways (hydrologic, atmospheric, and biologic) for long-term release of radionuclides to the environment should be identified for each site and the relative importance evaluated in terms of radiological impacts to help establish critical locations for monitoring stations.

The environmental-monitoring plan developed should be consistent with the guidelines contained in DOE (1983). Measurements on environmental samples should include gross alpha activity, gross beta-gamma activity, and gamma isotopic analyses; analyses for specific radionuclides, such as tritium (as HTO) and ^{131}I, may also be needed. The frequency for each sampling procedure should be specified in the monitoring plan. Additional samples should be taken whenever elevated radiation levels are detected. A typical operational monitoring program for a shallow land burial facility is shown in Table 6.3. Surface water should be sampled and analyzed periodically. Air samples should be collected and analyzed for alpha activity whenever there is a spill or an accident. Radiation measurement devices (e.g., thermoluminescent dosimeters) should be placed around the perimeter of the site and at locations within the site boundary to detect any increases in direct gamma radiation. Data can be correlated with background radiation levels and unusual operating conditions to yield information on exposures and potential doses attributable to the site operations.

Since radionuclide migration through groundwater is likely to be the most important transport mechanism at humid sites, monitoring of groundwater should have a high priority at humid sites. Groundwater monitoring wells should be located on-site and at various distances both upgradient and downgradient of the groundwater flow beneath the site. In most cases, it should be possible to use sampling wells constructed for site characterization (Chapter 4) and baseline monitoring activities, but some new wells may be needed on the basis of results of the pathways analysis

Table 6.3. Reference facility operational monitoring program[a]

Sample description	No. of locations	Type	Media	Frequency of analysis	Type of analysis
External gamma	50	Continuous	TLD[a]	Quarterly	Exposure
Atmosphere	3	Continuous	Particulate filter	Daily	Gross beta-gamma
			Particulte filter	Weekly	Gamma isotopic
			Charcoal cartridge	Weekly	^{131}I
Soil and vegetation	10	Grab		Quarterly	Gross beta-gamma, gross alpha, tritium
Off-site wells	5	Grab	H_2O	Semiannually	Gamma isotopic, gross alpha, tritium
Site boundary wells	10	Grab	H_2O	Semiannually	Gamma isotopic, gross alpha, tritium
Disposal area wells	10	Grab	H_2O	Quarterly	Gamma isotopic, Gross alpha, tritium
Filled disposal trench sumps[b]	10	Grab	H_2O	Monthly	Gamma isotopic, gross alpha, tritium

[a]TLD = thermoluminescent dosimeter.
[b]Trench sumps are checked each month. Analysis would only take place if water were determined to be present in a sump.
Source: U.S. Nuclear Regulatory Commission, 1981, Draft Environmental Impact Statement on 10 CFR Part 61, "Licensing Requirements for Land Disposal of Radioactive Waste," NUREG-0782, Appendix E.

(Sect. 2.5.3). A preliminary environmental-monitoring plan should be developed prior to site characterization and refined when site-specific measurements are made.

Constant-flow air samplers should be operated continuously during disposal operations at locations nearby and downwind from the work area to detect airborne releases of radioactivity. The locations of these samples should be based on available wind rose data and other meteorological information. Meteorological data including wind speed, wind direction, and continuous precipitation records should be collected periodically. Plant and animal species common to the site area (particularly burrowing animals) should be sampled periodically to detect potential biological redistribution of radioactivity.

The environmental-monitoring program should also include sampling stations outside the site boundaries, such as at the intake station of the nearest municipal water supply potentially affected by releases from the disposal site. The same data collection locations (both on-site and off-site) should be maintained, to the extent possible, throughout the lifetime of the facility.

6.7. ADMINISTRATIVE FUNCTIONS

Many administrative functions must be provided during site operations to monitor and control site performance. Records and reports should be kept, and tests and inspections should be conducted at low-level waste disposal sites.

A quality control program should be implemented to oversee, monitor, and audit all operational and administrative support functions to ensure that all operations are conducted as planned and that the site performs as required. The quality control program should gather information that will aid in the early identification of suboptimal practices and procedures and form the basis for corrective actions, when needed.

The quality assurance program should consider and be compatible with criteria established for waste acceptance, facility operations, site monitoring, recordkeeping, and other relevant aspects of facility management to ensure that operations are in full compliance with directives and

guidelines. Elements subject to quality control are identified in Fig. 6.5.

Security at a shallow land burial facility should be adequate to prevent unauthorized entry into the disposal site and to prevent unauthorized removal of material or equipment from the site. Security can be provided by the use of artificial barriers (fences and gates), 24-h guard services, alarm systems, and electronic surveillance. Even sophisticated security systems can be penetrated by dedicated effort on the part of intruders. Close surveillance by personnel and the ability to respond to special circumstances, such as organized intrusions, are therefore important elements of a security system.

The waste disposal facility should be staffed with an adequate number of full-time trained personnel. A management structure must be established for operating personnel at the disposal site, beginning with the designation of an individual who is responsible for all operations conducted at the site. The management structure should reflect the major areas of responsibility by senior staff members and establish the commensurate level of authority. An alternative to a full complement of trained personnel is the use of a smaller full-time staff that is supplemented by part-time personnel. However, such part-time personnel should have training and qualifications equivalent to those of the full-time staff.

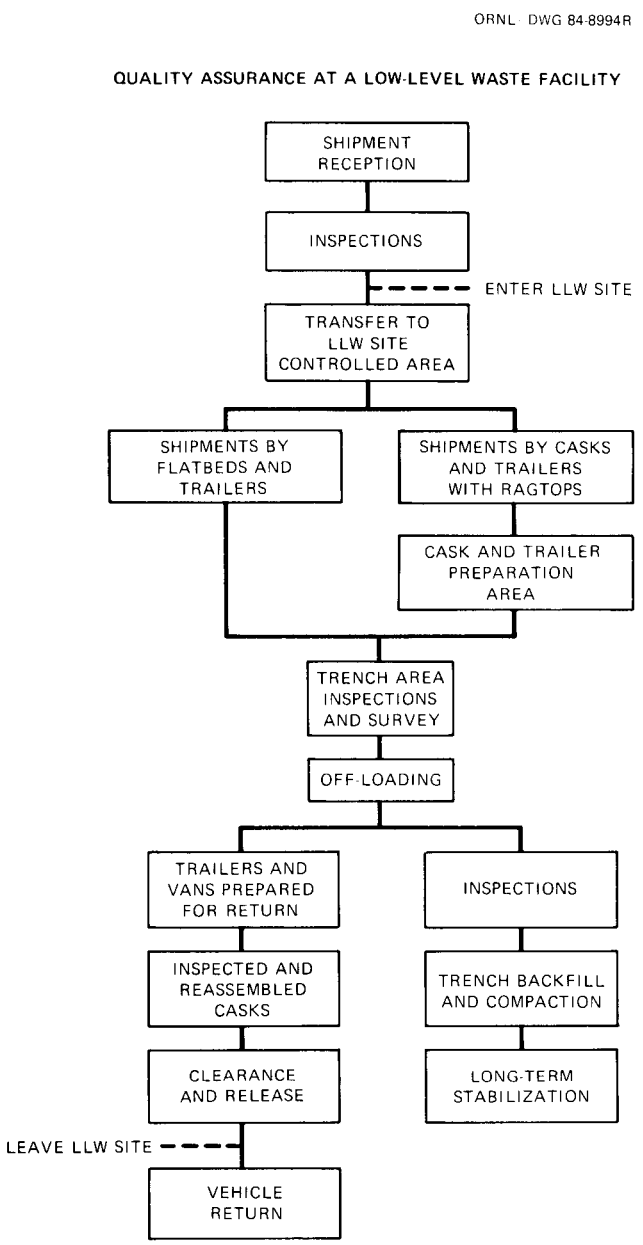

Fig. 6.5. Quality assurance at a low-level waste facility.

REFERENCES FOR CHAPTER 6

Chem-Nuclear Systems, Inc., 1980, Preliminary Site Stabilization and Closure Plan for the Barnwell Low-Level Radioactive Waste Disposal Facility, Compliance Assistance and Technical Services, Columbia, S.C.

Clar, M., et al., 1983, Restoration Techniques for Problem Soils at Corps of Engineers Construction Sites, U.S. Army, Chief of Engineers, Instruction Report EL-83-1 (Draft).

DOE (U.S. Department of Energy), 1983, Environmental Monitoring for Low-Level Waste Disposal Sites, p. 106. National Low-Level Radioactive Waste Management Program, EG&G, Idaho Falls, Idaho.

DOI (U.S. Department of the Interior), 1974, Earth Manual, Water and Power Resource Service.

McCray, J. G., et al., 1983, Low-Level Nuclear Waste Shallow Land Burial Trench Isolation, NUREG/CR-3084, U.S. Nuclear Regulatory Commission.

Romney, E. M., R. B. Hunter, and A. Wallace, 1980, Vegetation Management and Recovery at Sites Disturbed for Solar Thermal Power System Development," UCLA 12-1281, University of California, Los Angeles.

7. CLOSURE

Closure has the important function of stabilizing the disposal site such that minimal maintenance is required thereafter. This chapter discusses the contents of a closure plan and the focus of activities during closure.

7.1 OBJECTIVES

During the site selection, design, and operational phases in the life of a shallow land burial facility, actions should be taken both to minimize long-term migration of radionuclides and to inhibit human and biotic intrusion into the disposal units. Because the wastes may contain significant residual levels of radioactivity for a considerable period of time after active operation of the facility, site closure should function to preserve the containment and isolation provided at earlier stages. Therefore, to meet the overall goal of ensuring protection of public health and safety, the disposal site must be closed so that it will remain environmentally stable with a minimum of maintenance (Sect. 2.3).

There has been limited experience with final closure of shallow land burial sites; however, operational experience indicates that site drainage, erosion, and subsidence are the major items that need to be considered in planning for site closure. To achieve an environmentally stable site, the objectives for site closure include the provision for the following:

- Site drainage. A good site drainage system should be installed to minimize the contact of water with waste and, thus, limit the migration of radionuclides through the ground. The system should also be designed to minimize deterioration of the disposal units.

- Erosion control. The disposal unit should be stabilized to minimize erosion by wind or water. The disposal area should be graded to uniform and gentle slopes to reduce gullying. Vegetative covers provide additional erosion control; at arid sites, however, riprap may be preferred because of the difficulty of maintaining a good vegetative cover.

- Protection against subsidence. The site should be closed and stabilized to ensure that the waste form does not degrade or promote slumping, cave in, or other forms of trench failure that might lead to exposure of the waste or increased infiltration of water.

7.2 CLOSURE PLANS

Closure of a shallow land burial facility is integrally related to its operation. Planning for closure should begin prior to operation, in the form of a comprehensive closure plan. The site closure plan should be reviewed and amended prior to the initiation of closure activities to incorporate recent information and experience gained during operation. This information includes the types of problems encountered that may affect the long-term performance of the facility, the extent and frequency of corrective measures that are required, and the extent of radionuclide migration. The sequence and approximate time requirements for activities related to site closure and long-term performance of the facility are shown in Fig. 7.1.

The closure plan for the facility should describe design and other features intended to facilitate site closure and to eliminate the need for continuing active maintenance. The site closure plan should address the activities identified in Table 7.1. Closure of individual disposal units will likely begin during the early stages of site operation as the units are filled and should be viewed as the first step in closure. Site closure operations are anticipated to require two years to complete after site operations have terminated. The site closure plan should strive to achieve site stabilization to the extent that active maintenance of the site will not be required during postclosure and institutional control periods.

During the postclosure period, for approximately five years after site closure, site monitoring and needed repair operations shall continue. Site monitoring has the function of detecting any migration of radionuclides. Monitoring data should be evaluated on a regular basis to determine whether the facility is meeting its performance objectives. The data can also be used to verify and refine models of site performance for further and more reliable predictions of radionuclide migration throughout the performance period. Since active patrolling of the site by security personnel will be substantially reduced, passive barriers may require upgrading. Supplemental uses of the site may be considered, such as for shallow-rooted tree farming (Chem-Nuclear Systems 1980) or for siting microwave relay stations (Rogers et al. 1982). To date, there has been no experience with supplemental uses of disposal sites, and the feasibility of such proposals must be evaluated on a site-specific basis.

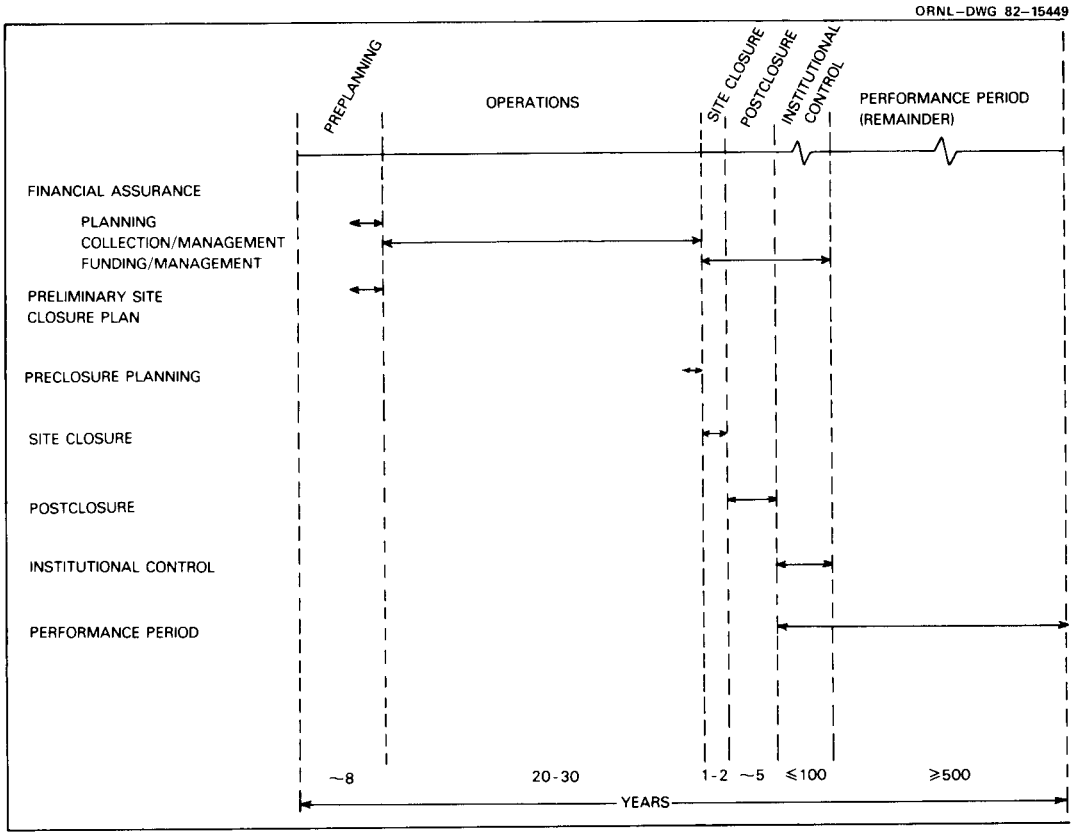

Fig. 7.1. Sequence and approximate time requirements for activities related to site closure, postclosure, and institutional control.

Table 7.1. Technical matters to be addressed in site closure plan

Stabilization and closure of disposal units

- o Backfilling
- o Void reduction
- o Cover

Stabilization and closure of disposal site

- o Drainage
- o Erosion control
- o Subsidence

Dismantlement of equipment and facilities

Decontamination of equipment and surface soils

Maintenance and surveillance during closure

- o Facilities
- o Equipment
- o Disposal units
- o Disposal site
- o Buffer zone

Maintenance and surveillance during post-closure

- o Disposal units
- o Disposal site
- o Buffer zone

Survey control

- o Disposal units
- o Monitoring wells

Corrective measures program

Monitoring program

Security and emergency response plans

The institutional control period is intended to maintain the necessary long-term care and administrative control for the site until the radionuclides in the wastes have decayed to nonhazardous levels. If the site is stable, institutional control will consist of minimal site monitoring, maintenance, and recordkeeping. If the site is not completely stable, additional monitoring, site maintenance, and corrective measures may be necessary. The release of a disposal site from institutional control will be made by future generations, as determined by their evaluation of its merit (Rogers et al. 1982). Thus, although institutional control is likely to last for at least 100 years (Fig. 7.1), it may last longer.

7.3 SITE CLOSURE OPERATIONS

The stability of a site can be compromised by natural phenomena such as erosion and subsidence or by human intrusion. Human intrusion is not a concern as long as effective institutional controls are maintained. However, after the end of institutional control, an inadvertent intruder could disturb the waste in the site through activities such as inhabiting the site. Site closure must provide for an institutional control scheme to exclude the inadvertent intruder or for barriers that will prevent an intruder from receiving an unacceptable radiation dose.

Measures to promote stability following site closure include site grading, installation of drainage control systems, erosion control measures, construction of intrusion barriers, and revegetation. These stabilization measures are used to protect the disposal units from erosion, flooding, subsidence, deep-rooted plants, burrowing animals, and any other site-specific environmental processes that may be important. At humid eastern disposal sites, drainage, control of water erosion, groundwater control, and prevention of flooding are the principal concerns of stabilization. At arid western sites, wind erosion and biotic intrusion are more likely to be major concerns.

7.3.1 Site Drainage

Surface water and groundwater can be controlled to a considerable extent through grading of the disposal area. In some cases, additional drainage control structures may be needed. Where rainfall is abundant, structures such as culverts or diversion dikes may be needed to control drainage. However, engineered features should be used only when they can be relied upon for maintenance-free performance for long time periods or when arrangements are made to provide the necessary maintenance. The closure plan for the Idaho National Engineering Laboratory disposal area specifies a drainage system sufficient to drain the 10-year, 24-hour rainstorm within 12 hours of the end of the rainstorm (Bradley 1981). In humid regions, disposal units may be equipped with drains or sumps, so the quantity of water present in the trench or pit can be monitored by measuring the flow from the drain. The sump and drain, if properly sized, can function to prevent or minimize moisture contact with the waste.

At the Barnwell, South Carolina, disposal site, completed disposal areas are graded to produce gentle slopes that will allow passive drainage and prevent gullying or slumping (Chem-Nuclear Systems 1980). Where the geohydrologic regime permits, the overall grade is raised a few meters so that no individual trench cap forms a topographic feature. However, at disposal facilities where water table levels are relatively close to the land surface, raising the grade may also elevate the water table to a level near the bottom of the disposal units.

The selection of drainage options for site closure requires consideration of the possible pathways for water to contact the waste and the mechanisms that may compromise the performance of the site. Options are then selected to minimize the likelihood of these pathways or mechanisms from being significant concerns.

7.3.2 Erosion Control

At arid sites, riprap may be appropriate to control wind erosion and discourage intrusion by burrowing animals or deep-rooted plants. Use of soil cement or other barriers may also serve these purposes (Sect. 5.3.4). Most disposal sites are revegetated with shallow-rooted grass as soon as possible after closure of disposal units. The vegetative cover provides erosion control and assists in reducing soil moisture by evapotranspiration. Control of vegetation involves two functions: (1) revegetation to establish an erosion-resistant soil cover that promotes evapotranspiration and (2) maintaining the disposal area free from deep-rooted plants or burrowing animals. When sites are graded, they must be reseeded. The species used for vegetative cover should be selected on the basis of regional and site-specific characteristics. The stabilization plan for the Idaho National Engineering Laboratory disposal facility calls for adding a layer of topsoil and reseeding with a shallow-rooted perennial grass (e.g., crested wheatgrass) (Bradley 1981). At the Barnwell, South Carolina, disposal site, grasses are also used. Herbicides may be used at both facilities to control or eliminate deep-rooted species.

7.3.3 Protection Against Subsidence

The disposal unit covers must be stable, have structural integrity, limit infiltration, and provide protection against biotic and inadvertent human intrusion. After a disposal unit is backfilled and covered, the soil naturally compacts and consolidates. The completed unit should be inspected periodically to determine if repairs are needed. The frequency with which repairs are required during the operational phase can be used to project the frequency with which inspections should be made after site closure. The frequency of repairs may differ, however, depending on the waste characteristics. Improved emplacement of waste packages and backfill operations may increase the length of time between repairs.

If the site has been stable against subsidence for several years, periodic inspection may be all that is required after site closure. However, if the site has experienced significant subsidence and has required

major or frequent repairs, corrective measures may be necessary. Corrective measures for subsidence have been described generally (Roop et al. 1983, Phillips and Carlson 1981) and considered specifically for the Sheffield site (Kahle and Rowland 1981). Additional guidance in developing corrective measures for shallow land burial sites is contained in DOE (1984).

7.4 SUMMARY

Successful closure of a disposal facility is the end result of considerable effort at earlier stages. Under ideal conditions, site selection and facility design and operation will have been performed properly so that the site can be closed with minimum cost and effort. In most cases, however, some problems are likely to arise during the operational phase that will require special attention during site closure. It is important that the operator of the site review the experience gained during operation of the facility in planning site closure.

REFERENCES FOR CHAPTER 7

Bradley, S. A., 1981, Stabilization and Closure Plan for the Idaho National Engineering Laboratory Subsurface Disposal Area, WM-F1-81-002, EG&G, Idaho Falls, Idaho.

Chem-Nuclear Systems, Inc., 1980, Preliminary Site Stabilization and Closure Plan for the Barnwell Low-Level Radioactive Waste Disposal Facility, Compliance Assistance and Technical Services, Columbia, S.C.

DOE (U.S. Department of Energy), 1984, Corrective Measures Technology for Shallow Land Burial, DOE/LLW-13Te, National Low-Level Radioactive Waste Management Program, EG&G, Idaho Falls, Idaho.

Kahle, R., and J. Rowland, 1981, Evaluation of Trench Subsidence and Stabilization at Sheffield Low-Level Radioactive Waste Disposal Facility, NUREG/CR-2101, U.S. Nuclear Regulatory Commission.

Phillips, S. J., and R. A. Carlson, 1981, Alternatives to Control Subsidence at Low-Level Radioactive Waste Burial Sites, RHO-LD-172, prepared for the U.S. Department of Energy by Rockwell International, Richland, Wash.

Rogers, V. C., M. W. Grant, and A. A. Sutherland, 1982, Low-Level Waste Disposal Site Performance Assessment with the RQ/PQ Methodology, EPRI-NP-2665, Electric Power Research Institute, Palo Alto, Calif.

Roop, R. D., et al., 1983, A Review of Corrective Measures to Stabilize Subsidence in Shallow-Land Burial Trenches, ORNL/TM-8715, Oak Ridge National Laboratory, Oak Ridge, Tenn.

INTERNAL DISTRIBUTION

1. L. D. Bates
2. W. J. Boegly, Jr.
3. T. R. Butz
4-11. J. B. Cannon
12. W. Fulkerson
13. W. F. Furth
14. J. R. Gissel
15. T. Grizzard
16. F. J. Homan
17. R. H. Ketelle
18. C. Kimbrough
19. F. C. Kornegay
20. D. W. Lee
21. L. W. Long
22. F. C. Maienschein
23. W. E. Manrod
24-25. L. J. Mezga
26. J. T. Miller
27. T. E. Myrick
28. T. W. Oakes
29. R. D. Roop
30. T. H. Row
31. W. P. Staub
32. L. H. Stinton
33. S. H. Stow
43. L. E. Stratton
44. R. E. Thoma
34-45. W. T. Thompson
46. J. W. VanDyke
47. S. D. Van Hoesen
48. T. J. Wilbanks
49. A. J. Witten
50. H. E. Zittel
51. Central Research Library Document Reference Section
52. ESD Library
53-55. Laboratory Records Department
56. Laboratory Records,ORNL-RC
57. ORNL Patent Section

EXTERNAL DISTRIBUTION

58. M. Barainca, Program Manager, Low-Level Waste Management Program, U.S. Department of Energy, 550 Second Street, Idaho Falls, ID 83401
59. Ramesh Bayal, U.S. Department of Energy, Brookhaven Area Office, Upton, NY 11973
60. George Birchard, U.S. Nuclear Regulatory Commission, Washington, DC 20555
61. J. J. Blakeslee, Program Manager, Nuclear Waste Processing, Rocky Flats Plant, Rockwell International, P.O. Box 464, Golden, CO 80401
62. Robert Boland, Health Physics Division, U.S. Department of Energy, P.O. Box 14100, Las Vegas, NV 89114
63. J. Thomas Callahan, Associate Director, Ecosystem Studies Program, Room 336, 1800 G Street, NW, National Science Foundation, Washington, DC 20555
64. Keros Cartwright, Illinois Geological Survey, Champaigne, IL 61820
65. T. C. Chee, R&D and Byproducts Division, DP-123 (GTN), U.S. Department of Energy, Washington, DC 20545
66. A. T. Clark, Jr., Division of Fuel Material Safety, U.S. Nuclear Regulatory Commission, Washington, DC 20555
67. Peter Colombo, Group Leader, Nuclear Waste Research, Brookhaven National Laboratory, Building 701, Upton, NY 11973

68. E. F. Conti, Office of Nuclear Regulatory Research, U.S. Nuclear Regulatory Commission, MS-1130-SS, Washington, DC 20555
69. J. J. Davis, Office of Nuclear Regulatory Research, U.S. Nuclear Regulatory Commission, MS-1130-SS, Washington, DC 20555
70. J. E. Dieckhoner, Acting Director, Operations and Traffic Division, DP-122 (GTN), U.S. Department of Energy, Washington, DC 20545
71. Don Dunning, Maxima, 107 Union Valley Road, Oak Ridge, TN 37830
72. G. J. Foley, Office of Environmental Process and Effects Research, U.S. Environmental Protection Agency, 401 M Street, SW, RD-682, Washington, DC 20460
73. Carl Gertz, Chief, Radioactive Waste Technology Branch, Idaho Operations Office, U.S. Department of Energy, 550 Second Street, Idaho Falls, ID 83401
74. T. L. Gilbert, Argonne National Laboratory, 9700 South Cass Ave., Argonne, IL 60439.
75. S. Malcolm Gillis, Professor, Economics and Public Policy, Department of Economics, Duke University, Durham, NC 27706
76. W. H. Hannum, Director, West Valley Project Office, U.S. Department of Energy, P.O. Box 191, West Valley, NY 14171
77. J. W. Huckabee, Project Manager, Environmental Assessment Department, Electric Power Research Institute, P.O. Box 10412, Palo Alto, CA 94303

78-82. D. G. Jacobs, H&R Technical Associates, P.O. Box 215, Oak Ridge, TN 37830

83. E. A. Jennrich, Program Manager, DOE Low-Level Waste Management Program, EG&G Idaho, Inc., P.O. Box 1625, Idaho Falls, ID 83401.
84. J. J. Jicha, Director, R&D and Byproducts Division, DP-123 (GTN), U.S. Department of Energy, Washington, DC 20545
85. E. A. Jordan, Division of Storage and Treatment Projects, NE-25 (GTN), U.S. Department of Energy, Washington, DC 20545
86. George Y. Jordy, Director, Office of Program Analysis, Office of Energy Research, ER-30, G-226, U.S. Department of Energy, Washington, DC 20545.
87. Fritz R. Kalhammer, Vice President, Electric Power Research Institute, P.O. Box 10412, Palo Alto, CA 94303
88. Roger E. Kasperson, Professor of Government and Geography, Graduate School of Geography, Clark University, Worcester, MA 01610
89. J. H. Kittel, Manager, Office of Waste Management Programs, Argonne National Laboratory, 9700 South Cass Avenue, Building 205, Argonne, IL 60439
90. L. T. Lakey, Waste Isolation, Pacific Northwest Laboratory, Richland, WA 99352
91. Leonard Lane, Los Alamos National Laboratory, P.O. Box 1663, Los Alamos, NM 87545
92. D. B. Leclaire, Director, Office of Defense Waste and Byproducts Management, DP-123 (GTN), U.S. Department of Energy, Washington, DC 20545
93. Martin Lessen, Consulting Engineer, 12 Country Club Drive, Rochester, NY 14618
94. C. Luner, Argonne National Laboratory, 9700 South Cass Ave., Argonne,IL 60439
95. Richard Lutton, U.S. Army Waterways Experimental Station, Vicksburg, MS 39170

96. Helen McCammon, Director, Ecological Research Division, Office of Health and Environmental Research, Office of Energy Research, U.S. Department of Energy, MS-E201, ER-75, Room E-233, Washington, DC 20545
97. Michael McFadden, Waste Management, Albuquerque Operations Office, U.S. Department of Energy, Albuquerque, NM 37115
98. G. L. Meyer, U.S. Environmental Protection Agency, 401 M Street, SW., MS-ANR459, Washington, DC 20460
99. H. A. Mooney, Department of Biological Sciences, Stanford University, Stanford, CA 94305
100. M. Neal, Transuranic Waste Systems Office, Rocky Flats Plant, P.O. Box 464, Golden, CO 80401
101. Edward O'Donnell, Division of Radiation Programs and Earth Sciences, U.S. Nuclear Regulatory Commission, MS-1130-SS, Washington, DC 20555
102. J. W. Patterson, Program Director, Waste Management Program Office, Rockwell Hanford Operations, P.O. Box 800, Richland, WA 99352
103. Roger Pennifill, U.S. Nuclear Regulatory Commission, Washington, DC 20555
104. Irwin Remson, Department of Applied Earth Sciences, Stanford University, Stanford, CA 94305
105. Paul G. Risser, Office of the Chief, Illinois Natural History Survey, Natural Resources Building, 607 E. Peabody Ave., Champaign, IL 61820
106. Jackson Robertson, U.S. Geological Survey, 410 National Center, Reston, VA 22092
107. E. M. Romney, University of California, Los Angeles, 900 Veteran Avenue, Los Angeles, CA 90024
108. R. J. Starmer, HLW Technical Development Branch, Office of Nuclear Material Safety and Safeguards, U.S. Nuclear Regulatory Commission, Room 427-SS, Washington, DC 20555
109. J. G. Steger, Environmental Sciences Group, Los Alamos National Laboratory, P.O. Box 1663, Los Alamos, NM 87545
110. R. J. Stern, Director, Office of Environmental Compliance, MS-PE-25, Forrestal Building, U.S. Department of Energy, 1000 Independence Avenue, SW, Washington, DC 20585
111. J. A. Stone, Savannah River Laboratory, E. I. du Pont de Nemours & Company, Building 773-A, Room E-112, Aiken, SC 29808
112. Pat Tucker, U. S. Army Waterways Experiment Station, Vicksburg, MS 39170
113. R. L. Watters, Ecological Research Division, Office of Health and Environmental Research, Office of Energy Research, U.S. Department of Energy, MS-E201, ER-75, Room F-226, Washington, DC 20545
114. John Wiley, Savannah River Laboratory, U.S. Department of Energy, P.O. Box A, Aiken, SC 29801
115. Raymond G. Wilhour, Chief, Air Pollution Effects Branch, Corvallis Environmental Research Laboratory, U.S. Environmental Protection Agency, 200 SW 35th Street, Corvallis, OR 97330
116. R. F. Williams, Electric Power Research Institute, P.O. Box 10412, Palo Alto, CA 94303
117. William H. Williams, Division Manager, AT&T Information Systems, Building 83, Room 1B23, 100 Southgate Parkway, Morristown, NJ 07960
118. F. J. Wobber, Division of Ecological Research, Office of Health and Environmental Research, Office of Energy Research, U.S. Department of Energy, MS-E201, Washington, DC 20545

119. M. G. Wolman, The Johns Hopkins University, Department of Geography and Environmental Engineering, Baltimore, MD 21218
120. R. W. Wood, Director, Division of Pollutant Characterization and Safety Research, U.S. Department of Energy, Washington, DC 20545
121. John S. Zawaeki, Director, Site Operations, Chem-Nuclear Systems, Inc., P.O. Box 726, Barnwell, SC 29812
122. Office of Assistant Manager for Energy Research and Development, U. S. Department of Energy, Oak Ridge Operations, P.O. Box E, Oak Ridge, TN 37831

123-149. Technical Information Center, U. S. Department of Energy, P.O. Box 62 Oak Ridge, TN 37831

☆U.S. GOVERNMENT PRINTING OFFICE: 1986-631-056/20221