MARTIN MARIETTA ENERGY SYSTEMS LIBRARIES
3 4456 0064514 9

ORNL/TM-9886

ornl

OAK RIDGE NATIONAL LABORATORY

MARTIN MARIETTA

Solids Suspension and Transfer Studies in a Model Digester Tank

B. E. Lewis

OAK RIDGE NATIONAL LABORATORY
CENTRAL RESEARCH LIBRARY
CIRCULATION SECTION
4500N ROOM 175
LIBRARY LOAN COPY
DO NOT TRANSFER TO ANOTHER PERSON
If you wish someone else to see this report, send in name with report and the library will arrange a loan.
UCN-7969 (3 9-77)

[redacted]

This document does not contain UCNI, ECI, or other unclassified sensitive information and has been approved for release to the public by:

David R. Hamrin 7/13/2011
David R. Hamrin, ORNL Classification Officer Date

OPERATED BY
MARTIN MARIETTA ENERGY SYSTEMS, INC.
FOR THE UNITED STATES
DEPARTMENT OF ENERGY

Printed in the United States of America. Available from
the U.S. Department of Energy
Technical Information Center
P.O. Box 62, Oak Ridge, Tennessee 37830

This report was prepared as an account of work sponsored by an agency of the United States Government. Neither the United States Government nor any agency thereof, nor any of their employees, makes any warranty, express or implied, or assumes any legal liability or responsibility for the accuracy, completeness, or usefulness of any information, apparatus, product, or process disclosed, or represents that its use would not infringe privately owned rights. Reference herein to any specific commercial product, process, or service by trade name, trademark, manufacturer, or otherwise, does not necessarily constitute or imply its endorsement, recommendation, or favoring by the United States Government or any agency thereof. The views and opinions of authors expressed herein do not necessarily state or reflect those of the United States Government or any agency thereof.

ORNL/TM-9886
Dist. Category UC-86T
Applied

Consolidated Fuel Reprocessing Program

SOLIDS SUSPENSION AND TRANSFER STUDIES IN A MODEL DIGESTER TANK

B. E. Lewis
Fuel Recycle Division

Date Published: July 1986

NOTICE: This document contains information of a preliminary nature. It is subject to revision or correction and therefore does not represent a final report.

Prepared by
OAK RIDGE NATIONAL LABORATORY
Oak Ridge, Tennessee 37831
operated by
MARTIN MARIETTA ENERGY SYSTEMS, INC.
for the
U.S. DEPARTMENT OF ENERGY
under Contract No. DE-AC05-84OR21400

MARTIN MARIETTA ENERGY SYSTEMS LIBRARIES
3 4456 0064514 9

CONTENTS

LIST OF FIGURES v

LIST OF TABLES vii

ABSTRACT ix

1. INTRODUCTION 1

2. EXPERIMENTAL PROCEDURES AND EQUIPMENT DESCRIPTIONS 5
   - 2.1 Digester Test Tank 5
   - 2.2 Solids Suspension Measurements 11
   - 2.3 Air-Motivated Agitators 12
     - 2.3.1 Central Air-Supply Lift Tube 12
     - 2.3.2 Pulse Tubes 13
     - 2.3.3 Multiple Air-Supply Lift Tubes 13
   - 2.4 Fluid/Solid Transfer Studies 22
   - 2.5 Level/Density Measurement Studies 22

3. DISCUSSION OF RESULTS 27
   - 3.1 Short-Tank Studies 27
     - 3.1.1 Scouting Tests 27
     - 3.1.2 Solids Suspension Studies 28
     - 3.1.3 Summary of the Short-Tank Solids Suspension Test Results 38
   - 3.2 Tall-Tank Tests 39
     - 3.2.1 Scouting Tests 39
     - 3.2.2 Solids Suspension Studies 42
     - 3.2.3 Fluid/Solid Transfer Studies 52
     - 3.2.4 Level/Density Measurement Studies 55

4. SUMMARY AND CONCLUSIONS 63

REFERENCES 65

Appendix A: SUMMARY OF SCOUTING TESTS 67

Appendix B: SHORT DIGESTER TANK SOLIDS SUSPENSION TEST SUMMARY 71

Appendix C: TALL DIGESTER TANK SOLIDS SUSPENSION TEST SUMMARY 77

LIST OF FIGURES

Figure		Page
1.1	Schematic of an annular digester tank with a sparge ring agitator	1
1.2	Typical (a) air-lift circulator and (b) central ballast tank used in large waste storage tanks	2
1.3	Sketch showing various types of pachuca tanks: (a) full-center-column tank; (b) stub-column tank; (c) free-air-lift tank; and (d) full-center-column tank, with shallow air introduction	3
1.4	Slotted air lift for agitation of a variable-level charge	4
2.1	Short digester tank test stand	6
2.2	Tall digester tank test stand	7
2.3	Solids used in the solids suspension studies	8
2.4	Experimental digester tank model for the tall-tank tests	9
2.5	Sketch of the tank-bottom designs	10
2.6	Perforated foot-piece air-supply-tube design used in initial solids suspension studies	12
2.7	Spider sparge and perforated foot-piece air-supply tubes	14
2.8	Spider sparge tube design	15
2.9	Pulse tube with nozzle outlet	16
2.10	Four-air-supply lift-tube agitator and tank-top assembly	17
2.11	Air-supply tubes for four-air-supply lift-tube agitator	18
2.12	Air-supply design sketch for the three-air-supply agitator	19
2.13	Three-air-supply agitator installed in the short digester tank model	20
2.14	Three-air-supply recirculator design with a 2-in. Sch 40 stainless steel lift tube	21
2.15	Air-supply-tube outlet designs	23
2.16	Actual air-supply tubes used in the solids suspension tests	24
2.17	Annular air-supply lift tube	25
2.18	Level/density bubbler tubes	26
3.1	Approximate locations of short-tank sample points	29
3.2	Variation of solids suspension level with air flow and solids concentration using the four-air-supply agitator	31
3.3	Variation of percent solids in suspension with separation between the four-air-supply lift tube and tank bottom at various air-flow rates	32
3.4	The effect of variation of solids concentration and air flow on solids suspension level with the three-air-supply agitator, 100-g wires, and a central suction line	34

3.5 Variation of percent solids in suspension with air flow rate and lift tube separation for the tank bottom in the absence of wires 36
3.6 Variation of percent solids in suspension with the quantity of wires in the tank at a constant air flow and separation 37
3.7 Variation of average percent solids in suspension with the three-air-supply agitator eccentricity 38
3.8 Schematic representation of air flow pattern/direction from air-supply tube outlet design c in Fig. 2.16 40
3.9 View of tank bottom depicting off-center air-supply stream direction 41
3.10 Approximate locations of tall-tank sample points 43
3.11 Variation of percent solids in suspension with air line extension and air flow using 2.5-in.-ID lift tube with a lift tube tank bottom separation of 2.94 cm 44
3.12 Variation of percent solids in suspension with lift tube/tank bottom separation using the 2.5-in. ID lift tube 45
3.13 Variation of solids suspension level with air flow rate and liquid level 46
3.14 Schematic representation of air stream direction angle, α 47
3.15 Variation of solids suspension level with air flow and air stream direction for the stainless steel lift tube 48
3.16 Variation of percent solids in suspension with air flow and solution specific gravity 49
3.17 Comparative performance of the stainless steel and plastic lift-tube agitators in the tall digester tank 50
3.18 Variation of percent solids in suspension with air flow rate and air line extension using the 2-in. Sch 40 stainless steel lift tube 51
3.19 Variation of percent solids in suspension with air flow and use of a screen over the end of the jet suction line 52
3.20 Typical data plot for level/density readings showing the maximum density fluctuation 55
3.21 Density readout fluctuation as a function of agitator air flow and bubbler elevation for the 0.25-in. tubing bubblers 56
3.22 Density readout fluctuation as a function of agitator air flow and design 57
3.23 Normally shaped bubbles from bubbler tube giving minimal fluctuations in readings 58
3.24 Abnormally shaped bubbles from bubbler tube for conditions with large fluctuations in readouts 59
3.25 Density readout fluctuation as a function of liquid level and agitator air flow 60
3.26 Density readout variation as a function of bubbler elevations, air flow to the agitator, and solids content 61

LIST OF TABLES

Table		Page
3.1	Summary description of the equipment studied in the experiments where sampling was used in the short digester tank	30
3.2	The effects of various tank-bottom designs on solids suspension levels	35
3.3	The effects of lift tube separation from the tank bottom and the presence of sheared wires on solids suspension levels	37
3.4	Summary description of the equipment studied in the experiments with the tall digester tank	44
3.5	Dilution studies for water transfers	53
3.6	Solids transfer and dilution study results using water with various solids	53
A.1	Description of agitators used in the short digester tank scouting tests with 1190- to 4750-μm stainless steel particles	68

ABSTRACT

This report summarizes the development of a modified pachuca tank and air-motivated agitator design for use in a fuel reprocessing plant. Various tank design features, operating conditions, and types of agitators were studied to determine their effects on solids suspension, level/density measurements, and slurry transfer ability. The recommended tank design is a cylindrical tank with a conic midsection leading to a 6-in.-diam critically safe cylindrical solids collection reservoir. The preferred agitator design is an intermittent air-flow gas-lift recirculator featuring three external air-supply lines. Solids suspension levels ≥90% were attained using tungsten powder in water.

A variety of level/density bubbler tube designs were tested to study the effect of the operation of the agitator on level and density readings. A simple 0.25-in. Sch 40 pipe gave readings as stable as any of the other more elaborate designs tested, with density fluctuations in the range of 0.01 to ~0.04 g/mL. Level readings were generally not adversely affected by the operation of the agitator.

Steam jet transfer was a very effective means of removing the <80-μm-diam tungsten solids and solution from the tank. A coarse screen over the end of the jet suction line prevented large solids from plugging the jet. Dilution levels in the range of 8% to 10% were obtained for the transfer of water at ambient conditions. These dilution levels are higher than the typically observed values of 3% to 5%, probably because of the occurrence of condensate in the steam supply line and the relatively small volume of the solution transferred.

1. INTRODUCTION

The digester tanks receive product solution from the continuous rotary dissolver and provide additional residence time for the dissolution of slowly dissolving fuel particles. It is estimated that as much as 10% to 20% of the fuel particles fed to the continuous dissolver may enter the digester tanks because of the close proximity of the solids feed and product takeoff. Suspension of the solids in the digester tanks is necessary to promote their dissolution and avoid the accumulation of highly radioactive solids. Solids suspension in a fluid can be readily accomplished by mechanical agitators. However, to minimize the maintenance problems associated with using mechanical mixers in a radioactive environment, a gas-motivated fluid-mixing system with no moving parts exposed to the process liquids is desirable.

In addition to providing additional residence time for dissolution, the digester tanks are also used to liberate iodine from the fuel solution. A sparge gas such as air or N_2 is used to strip the iodine from the fuel solution. Use of a gas-motivated fluid-mixing system in the digester tanks will provide the sparge gas needed for the iodine evolution process.

To effectively suspend solids using a gas-motivated mixer, the design of the tank must complement the performance of the mixer. Initially, the digester tanks were of an annular design (Fig. 1.1). A sparge ring located in the bottom of the tank and encircling the stub of the annulus was used as the air supply. This design was ineffective at suspending fine nickel powders (<44 μm), which tended to agglomerate and settle to the bottom of the

ORNL–DWG 86–6774

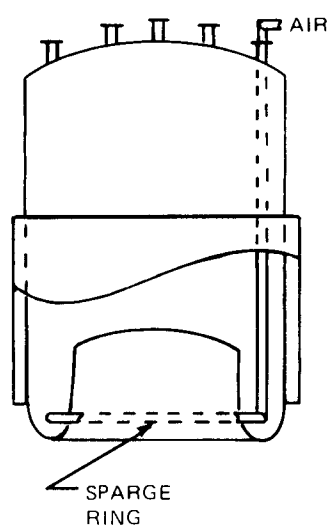

Fig. 1.1. Schematic of an annular digester tank with a sparge ring agitator.

tank.[1] The sparge ring was more successful at suspending fine stainless steel particles (<44 μm). However, we were concerned about material settling between the air outlets in the sparge ring. Other experimenters studying solids suspension in annular tanks have also reported air sparging to be ineffective.[2] Willis found that liquid jet pulsing was more successful at suspending solids but required multiple jets in various locations in the annular tank. Willis also noted that horizontal jets located around the bottom of the tank were useful in keeping solids partially suspended; this amount of suspension was enough to allow the efficient removal of the solution and solids from the tank.

Air-lift circulators and ballast tanks (Fig. 1.2) are used in conjunction with air spargers to mix high-level waste solutions in large storage tanks.[3,4] During operation, the liquor contained in the ballast tank is rapidly expelled through the nozzle in the lower end

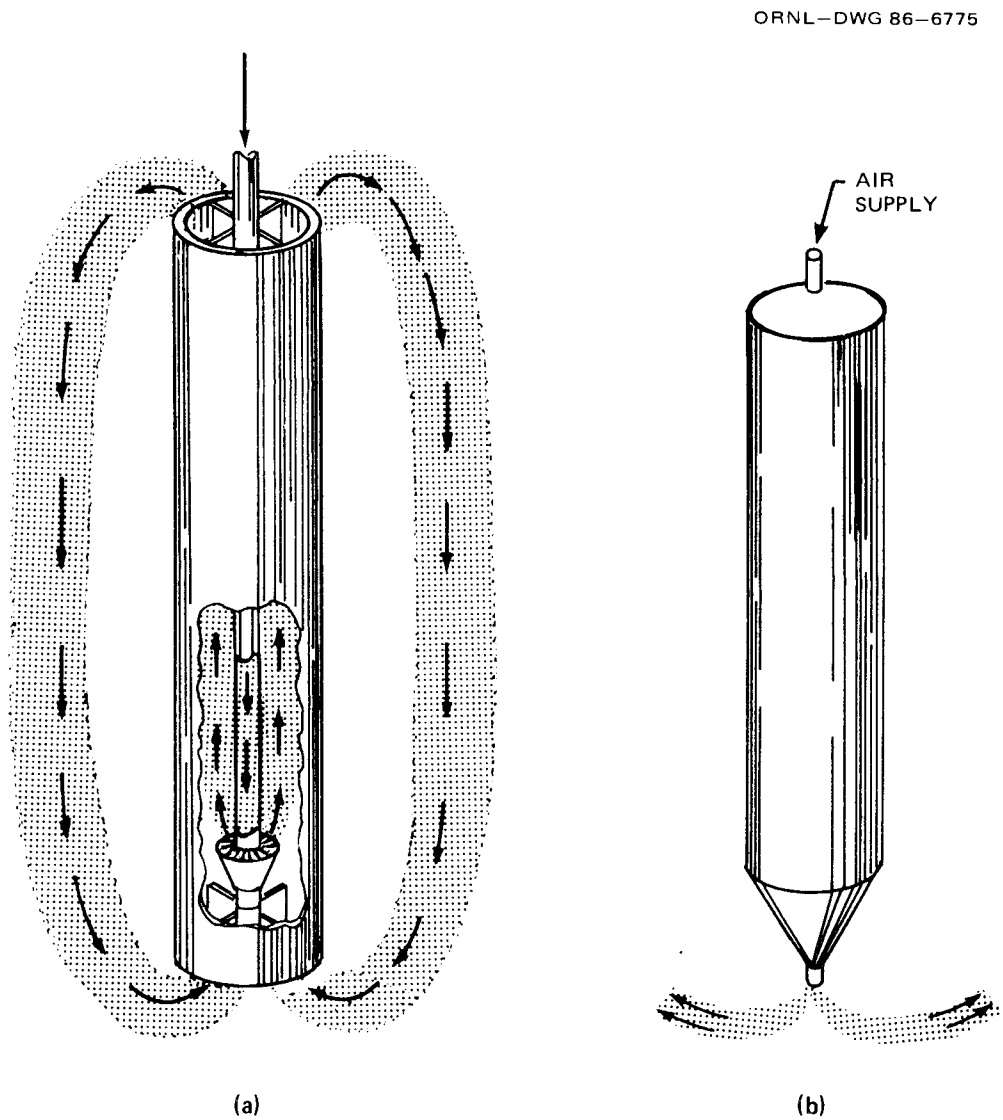

Fig. 1.2. Typical (a) air-lift circulator and (b) central ballast tank used in large waste storage tanks.

of the tank by air pressure. The liquid jet from the ballast tank sweeps the bottom of the waste tank about once per hour, thereby resuspending any solids that have settled. Once the solids have been swept from the bottom of the storage tank, air-lift recirculators maintain the dispersion for a length of time dependent on the settling velocity of the particles in suspension. Cook and Waters studied the operational characteristics of submerged gas-lift circulators and found them to be an economic and effective means of achieving mild liquid agitation in large tanks.[5] Their study was concerned primarily with the development of reliable design information and methods based on experiments with a variety of circulator designs and operating conditions.

An effective combination of tank design and air agitation is given by the pachuca tank. The pachuca tank is a vessel with a conical bottom (usually having a 60° included angle) into which air is introduced at the tip of the inverted cone. The conical bottom is used to direct settled solids into a region from which they are resuspended by the fluid currents developed by the air. Several types of pachuca tanks are shown in Fig. 1.3. Pachuca tanks have been successfully used in a variety of applications including leaching of gold ores in South Africa and uranium ores in Canada. A description of the flow patterns and equations for calculating the liquid circulation rate in pachuca tanks is presented by Lamont.[6] The circulation rates calculated by Lamont compare reasonably well with those calculated by Cook and Waters's method for gas-lift circulators.[5] The experiments by Lamont and by Cook and Waters were conducted using relatively tall tanks usually filled with solution. When the solution level varies widely and while a relatively coarse, heavy slurry is being agitated, Heiser recommended using an air lift having a draft tube with discharge ports located at several heights (Fig. 1.4).[7]

ORNL–DWG 86–6776

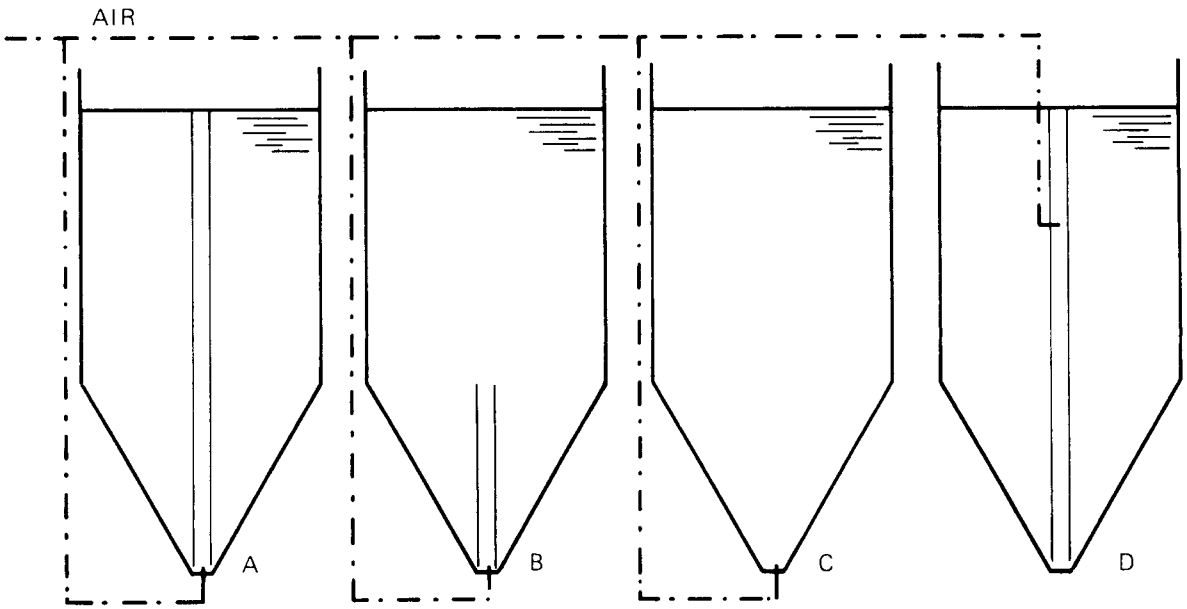

Fig. 1.3. Sketch showing various types of pachuca tanks: (a) full-center-column tank; (b) stub-column tank; (c) free-air-lift tank; and (d) full-center-column tank, with shallow air introduction.

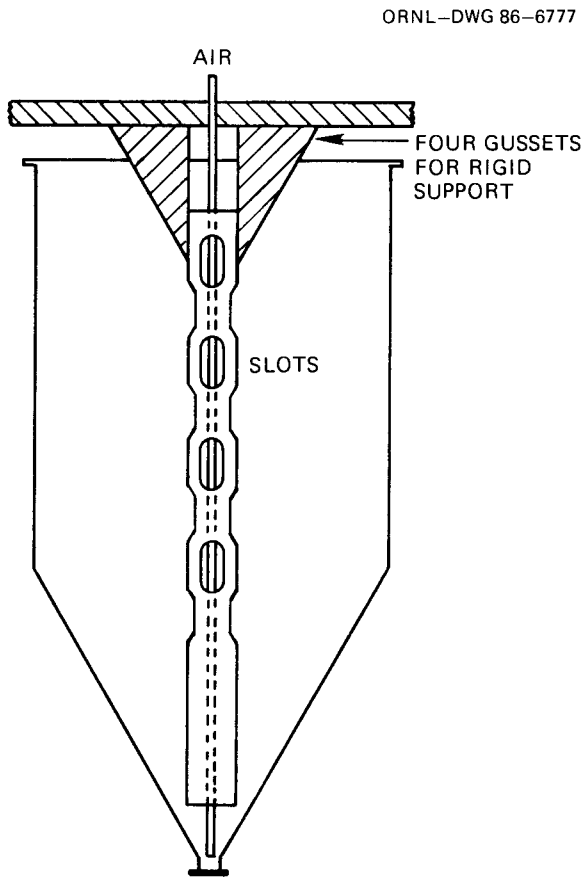

Fig. 1.4. Slotted air lift for agitation of a variable-level charge. Source: H. W. Heiser, *Chem. Eng.*, **55**(1), 135 (1948).

The work reported here has been directed toward the development of a modified pachuca tank and air-motivated agitator design for use in a fuel reprocessing plant. Various tank design features, operating conditions, and agitator designs were studied to determine their effects on solids suspension, level/density measurements, and slurry transfer ability.

2. EXPERIMENTAL PROCEDURES AND EQUIPMENT DESCRIPTIONS

Two digester tank test stands were used in this work. The first test stand (Fig. 2.1) is ~5 ft tall and was used to study various air lift designs. Figure 2.2 is a photograph of the tall-tank (~8 ft) test stand, which was fabricated by stacking additional tank sections and support frames on top of the short test stand. The tall-tank test stand was used to extend the range of applicability of the results from the short tank, study slurry removal efficiency, and determine the effect of tank operation on level/density measurements.

Calcium nitrate solutions were used in some experiments to simulate dissolver solutions with specific gravity ranging from ~1.29 to 1.37. The viscosity of the calcium nitrate solutions was ~2 to 3 times that of typical fuel solutions, thus decreasing particle-settling velocities. Therefore, demineralized water was usually used as a test liquid so that higher particle-settling velocities could be achieved, thus making solids suspension more difficult. Weighed quantities of tungsten particles <176-μm diam, stainless steel powders ranging in size from ~1 to 4750-μm diam, and spacer wires 2.54 cm long by 0.16-cm diam were used to simulate the slowly soluble fuel particles and tramp materials expected in a digester tank. All the solids except the 1190- to 4750-μm-diam stainless steel powders are shown in Fig. 2.3. When $Ca(NO_3)_2$ solutions were needed, a 30-gal stainless steel drum was used as the makeup tank to prepare the appropriate solution concentration. Any undissolved solids were removed from the test solution by centrifugation prior to each test.

2.1 DIGESTER TEST TANK

The experimental digester tank model was constructed of Plexiglas so that visual inspection of all areas in the tank was possible. The tank was fabricated in sections to allow the testing of different configurations. The configuration for the tall test tank is shown in Fig. 2.4.

The tank design differs from a pachuca tank in that the bottom has a solids collection reservoir of critically safe dimensions. The diameter of the bottom section of the tank was set at ~6 in. based on criticality considerations for a bed of settled uranium and plutonium solids. The 10.5-in. length specified for the bottom section of the tank (Fig. 2.4) is sufficient to accommodate ~12 to 30 kg of settled solids, depending on the bulk density of the bed.

Three tank-bottom designs were studied to determine their effect on solids suspension performance. These designs are shown in Fig. 2.5. The various bottoms were bolted to the base of the conical section of the tank for testing.

ORNL–PHOTO 5002–81

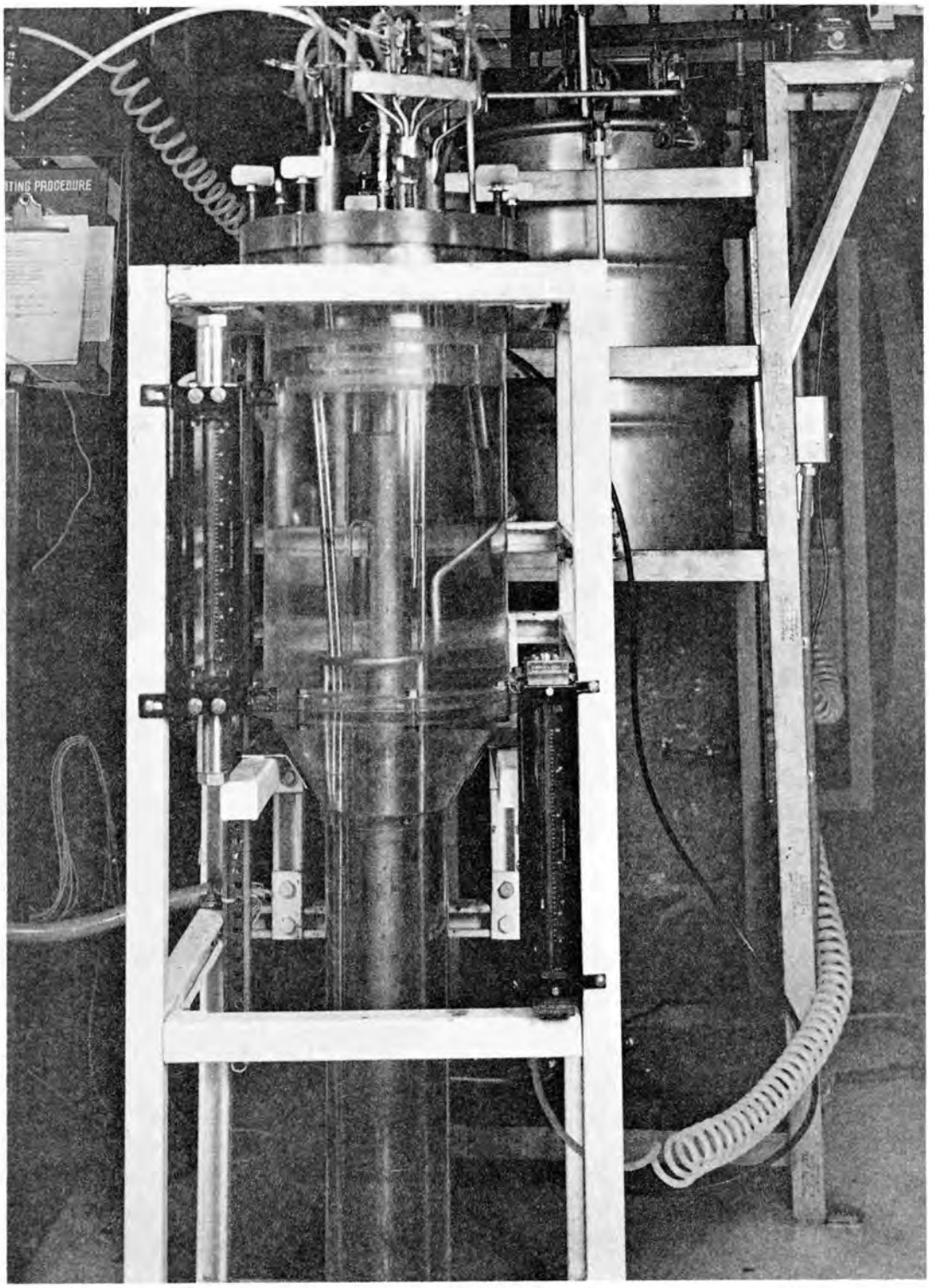

Fig. 2.1. Short digester tank test stand.

ORNL–PHOTO 0868–82

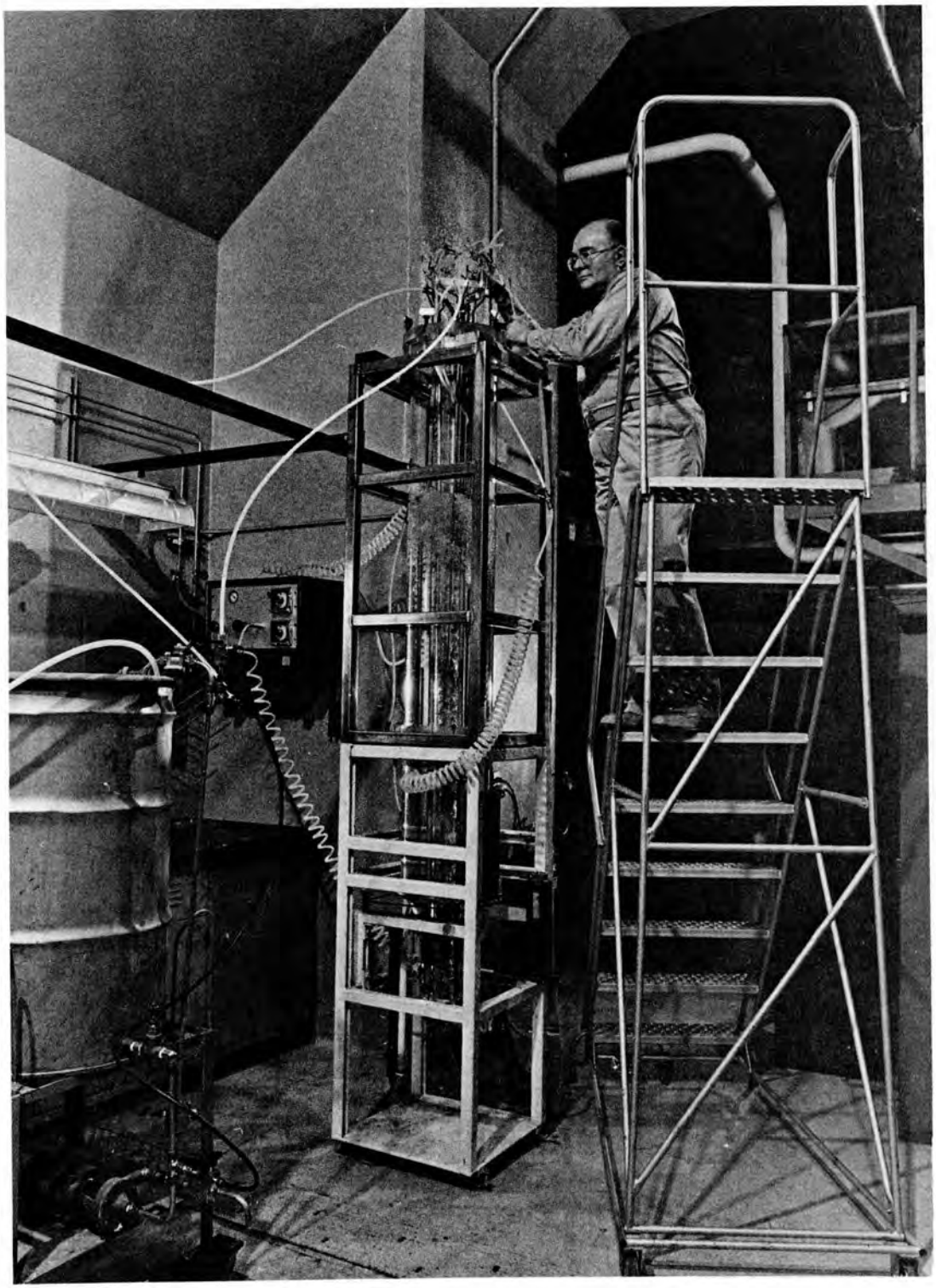

Fig. 2.2. Tall digester tank test stand.

ORNL–PHOTO 5520–83

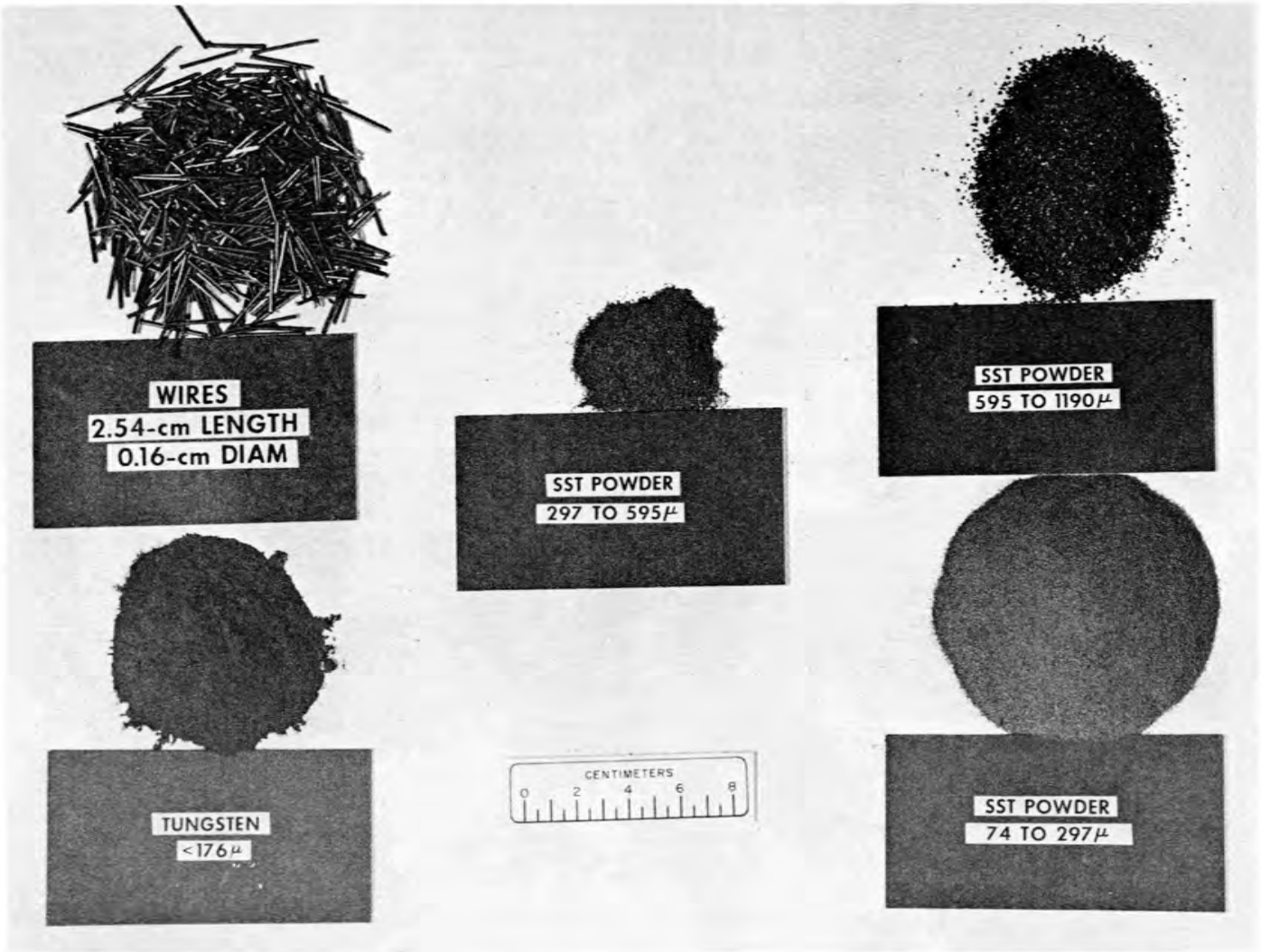

Fig. 2.3. Solids used in the solids suspension studies.

ORNL–DWG 81–1250R

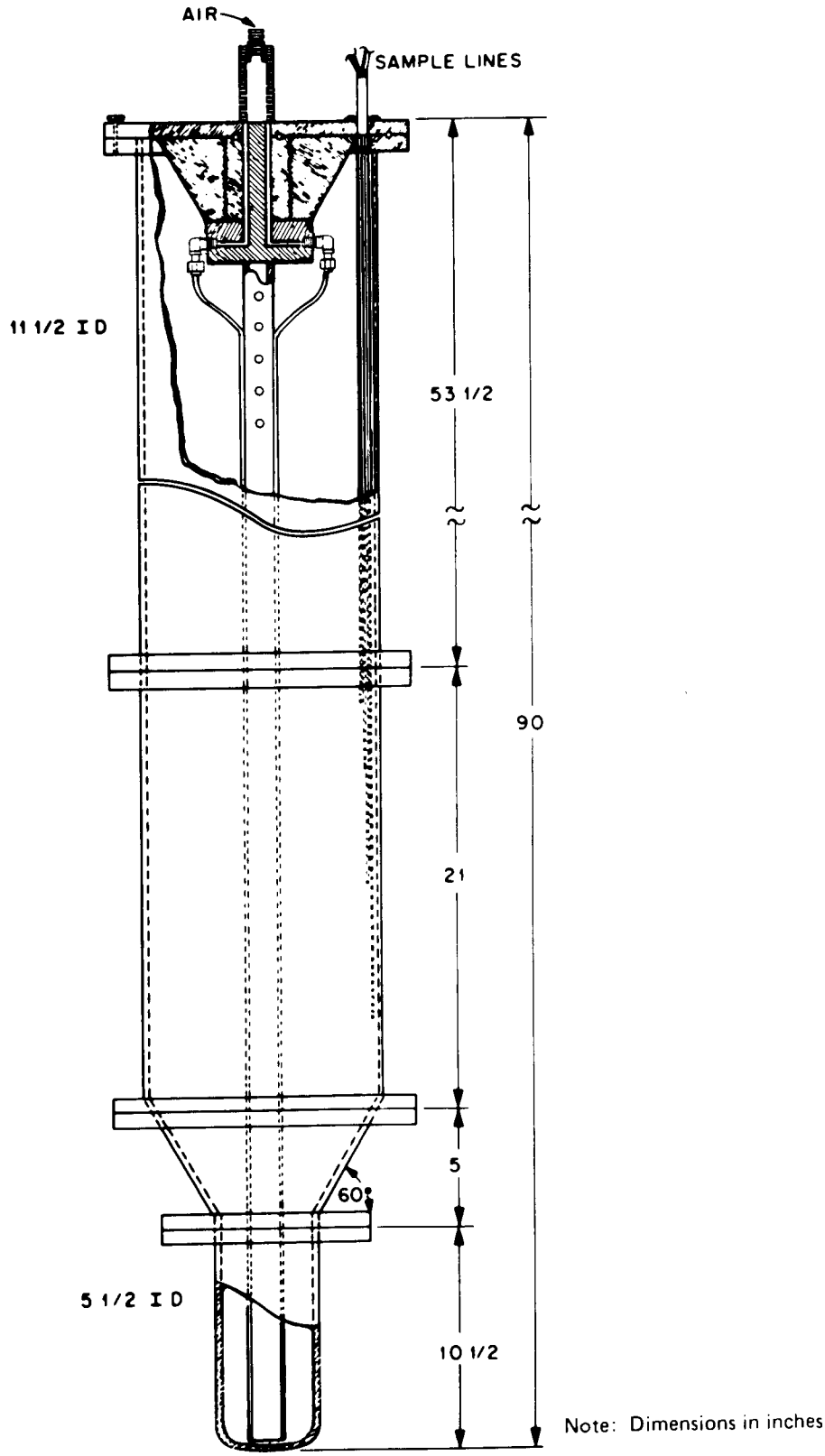

Fig. 2.4. Experimental digester tank model for the tall-tank tests.

ORNL-DWG 86-6778

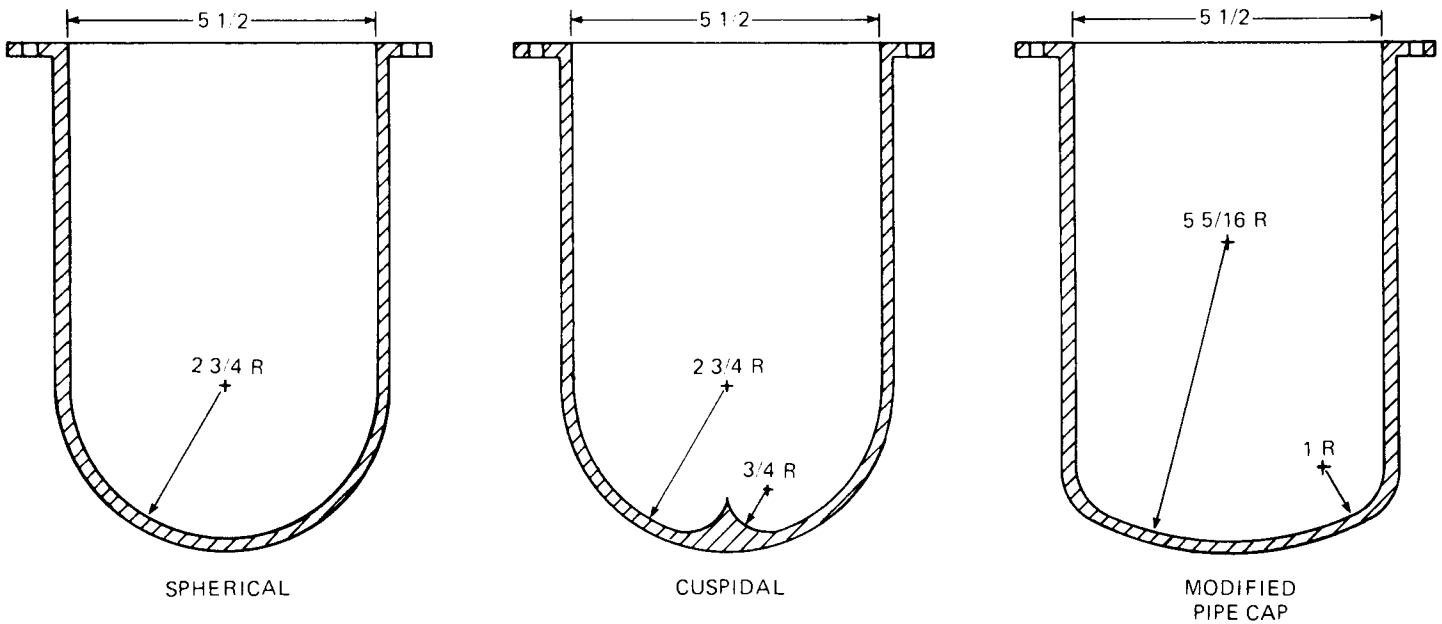

Note: Dimensions in inches

Fig. 2.5. Sketch of the tank-bottom designs.

2.2 SOLIDS SUSPENSION MEASUREMENTS

The average percent suspension of solids in the test tank was determined using the following equation:

$$\text{percent suspension} = 100 \times \frac{\sum_{i=1}^{N} C_i/N}{C_0} , \tag{1}$$

where N is the number of samples drawn, C_i is the solids concentration of each sample, and C_0 is the input solids concentration.[8] A total of 12 samples, drawn from various fixed locations in the test tank, was used to calculate the average percent suspension. An indication of the degree of uniformity of the suspension is given by the standard deviation of the sample solids concentration, σ_s. The standard deviation of the sample solids concentrations scaled relative to the mean sample solids concentration gives an indication of the percent variation of the sample concentrations and is calculated by:

$$\text{percent variation} = \frac{100\sigma_s}{\sum_{i=1}^{N} C_i/N} . \tag{2}$$

Percent variation is more useful than σ_s alone because it conveniently allows the comparison of runs with dissimilar input solids concentrations.

Samples were drawn from the test tank by rapid vacuum transfer. About 50 mL of the test solution were removed with each sample. Prior to sampling, each of the 12 sample lines was blown down using pressurized air to avoid stagnant liquid zones for sample collection. Samples were collected in tared polyethylene bottles. The tare weight, postsample weight, and net sample weight were recorded in the log book. All sample bottles were labeled with a run number, sample location code, and the net sample weight. The samples were then filtered using glass frit filters to determine the quantity of solids collected and to obtain a concentration profile for the tank.

Initially, attempts were made to use light-transmission and reflection techniques to continuously measure the solids concentration in the test tank.[9] Eight LED/photocell units were mounted to the outside of the digester tank. Near-infrared light from the LED, reflected from the solids suspended in the digester tank solution, was received by a photocell that produced an electrical signal proportional to the solids concentration at the sensor location. After several limitedly successful attempts at maintaining the calibration and using the instrumentation, the LED/photocell solids concentration measurement system was abandoned in favor of the previously described sampling technique. The light-transmission method suffered from an undue sensitivity to ambient light, temperature changes, and vibration. In addition, the operating conditions of the experiments yielded near-opaque slurries that may have forced the photocell to operate in an unstable region. Had the slurry not been so opaque, then light-transmission measurements, similar to those described by V. Kolar, would have been feasible.[10]

2.3 AIR-MOTIVATED AGITATORS

Several types of gas-motivated agitators were studied in this work. Initially, a simple air-lift circulator similar in design to those used by Cook and Waters, but significantly scaled down, was used.

2.3.1 Central Air-Supply Lift Tubes

The first air-lift device tested consisted of a 1.25-in.-ID Plexiglas lift tube having four liquid overflow slots about two-thirds of the way from the bottom of the tube. A single air-supply line (Fig. 2.6) down the center of the lift tube was used.

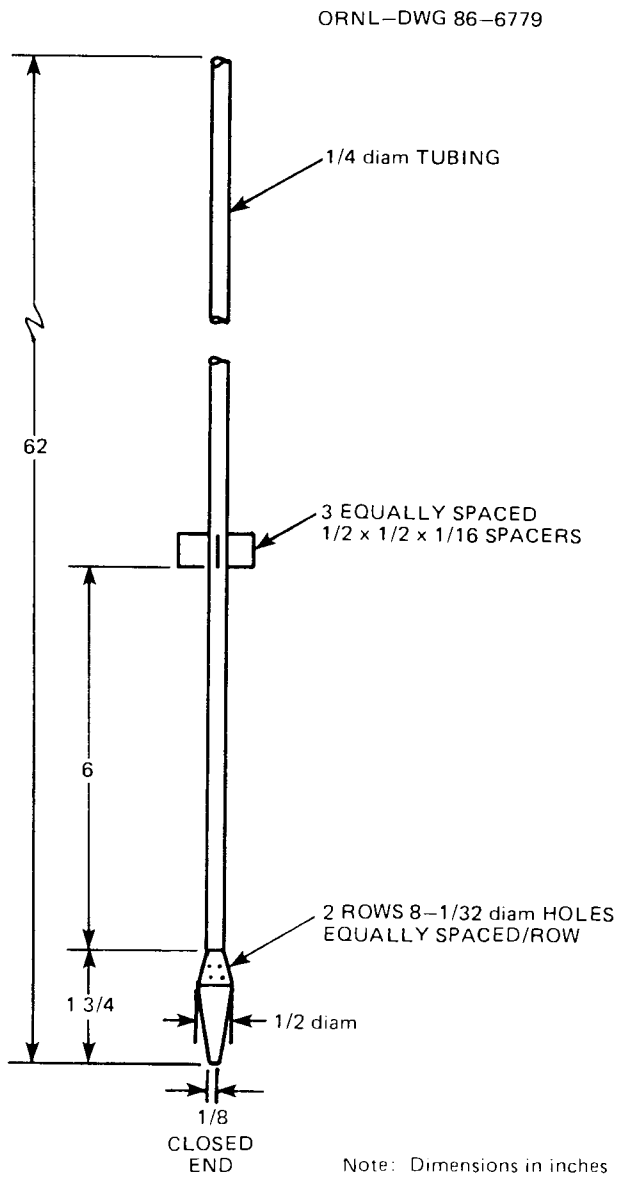

Fig. 2.6. Perforated foot-piece air-supply-tube design used in initial solids suspension studies.

A second air-supply tube (shown with the perforated foot-piece supply tube in Fig. 2.7) was also used with the 1.25-in.-ID lift tube. This air-supply tube, referred to as the spider sparge tube, was composed of 0.375-in. tubing with four semicircular 0.25-in. tubes attached to the bottom for the air outlets (Fig. 2.8). This design was originated to provide increased agitation of solids in the bottom of the tank by imparting a swirling motion to the fluid residing therein.

2.3.2 Pulse Tubes

Pulse tubes are similar in operation to ballast tanks. Compressed air is periodically used to push a column of fluid from the pulse tube out into the tank at a sufficient velocity to remove the solids from the bottom of the tank and resuspend them. The solids suspension performance of three pulse tubes was briefly studied in this work. Two of the pulse tubes were simple Plexiglas pipes with an air supply at the top and were identical—except for the inside diameters of the tubes, which were 1 and 1.5 in. The third pulse tube (Fig. 2.9) was a 50-in.-long, 2.5-in.-ID Plexiglas pipe with a 9-in.-long nozzle reducing the outlet diameter to 0.75 in. This pulse tube had connections for up to six check valves, which were used to allow refilling of the pulse tube chamber from the top.

2.3.3 Multiple Air-Supply Lift Tubes

Multiple air-supply lift tubes are composed of a draft tube and two or more air sources external to the draft tube. This type of fluid-circulation device provides needed agitation in the bottom of the tank that is not possible with ordinary air lifts and spargers. The external air-supply lines also allowed the placement of the jet suction line down the center of the lift tube so that material could be conveniently removed from the tank. This method of solids suspension was discovered as a result of the inability of the centrally located air-lift circulator to adequately suspend large stainless steel solids (1190- to 4750-μm diam) in the short digester tank model. Initially, a temporary setup with first one and then two external air supply tubes was studied by visually observing the performance of the apparatus using 20 to 40 g/L of 1190- to 4750-μm-diam stainless particles in $Ca(NO_3)_2$ solutions. A more refined version of the multiple air-supply lift tube, having four external air supplies, was built and tested extensively. The four-air-supply lift tube and tank-top assembly is shown in Fig. 2.10. The lift tube was a 1.5-in.-ID plastic pipe with eight overflow slots near the top. The air-supply tubes, composed of 0.375-in. stainless steel tubing, were equally spaced around the outside of the lift tube as shown by the close-up view in Fig. 2.11. Also, the end of the lift tube was beveled to minimize the resistance to flow up the tube.

A three-air-supply lift tube was also studied. The design shown in Fig. 2.12 was tested with a 2.5-in.-ID lift tube, which was installed in the short digester tank as shown in Fig. 2.13. The three-air-supply lift tube designs were also studied on the tall digester tank shown in Figs. 2.2 and 2.4. The design was first built using a 2.5-in.-ID Plexiglas lift tube fitted with three air-supply lines joined in series. The final design consisted of a 2-in. Sch 40 stainless steel lift tube with the three air-supply lines joined in parallel via a manifold (Fig. 2.14). This design allowed the replacement of the ends of the air-supply tubes so that

ORNL–PHOTO 1413–81

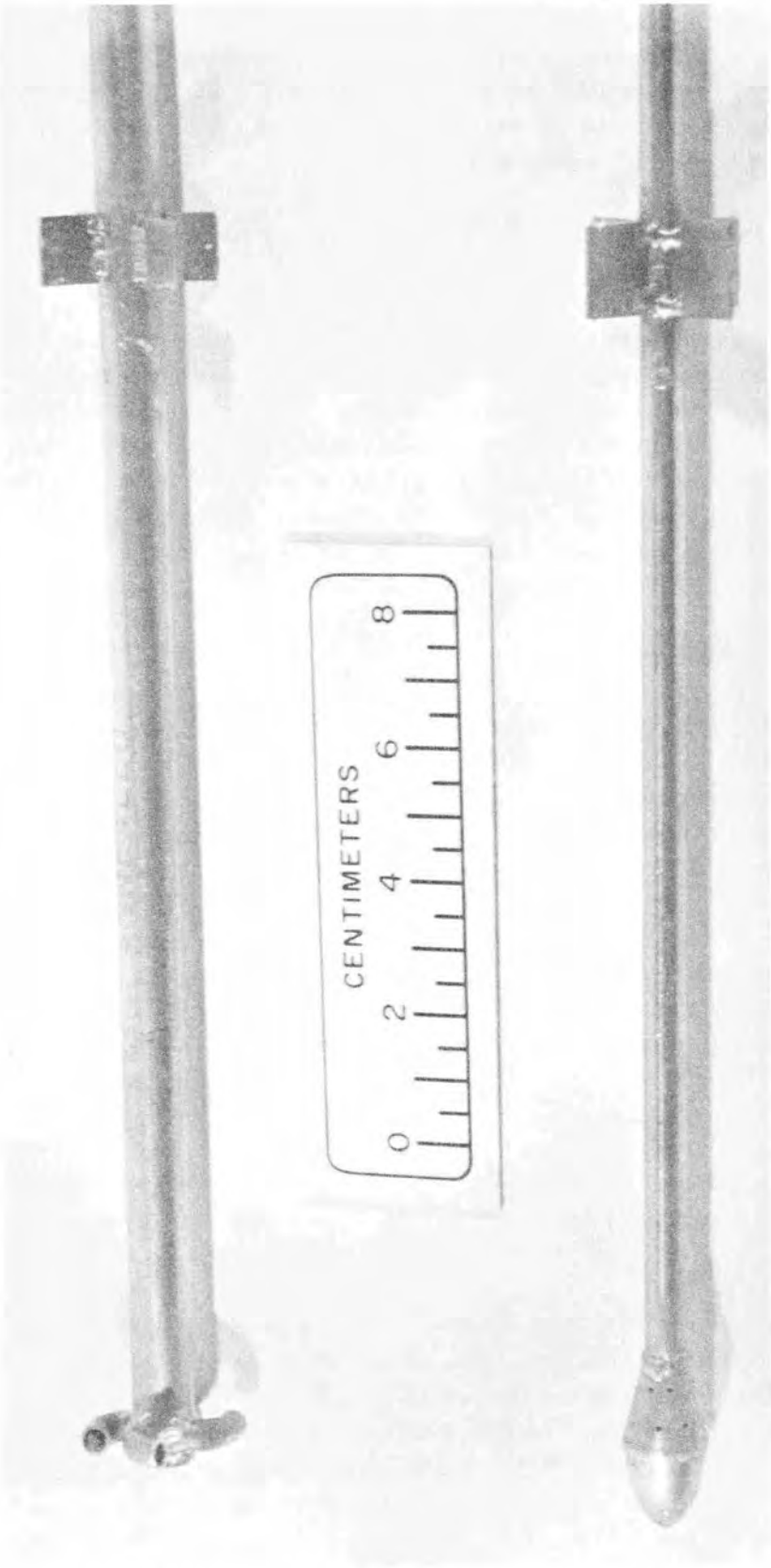

Fig. 2.7. Spider sparge and perforated foot-piece air-supply tubes.

ORNL–DWG 86–6789

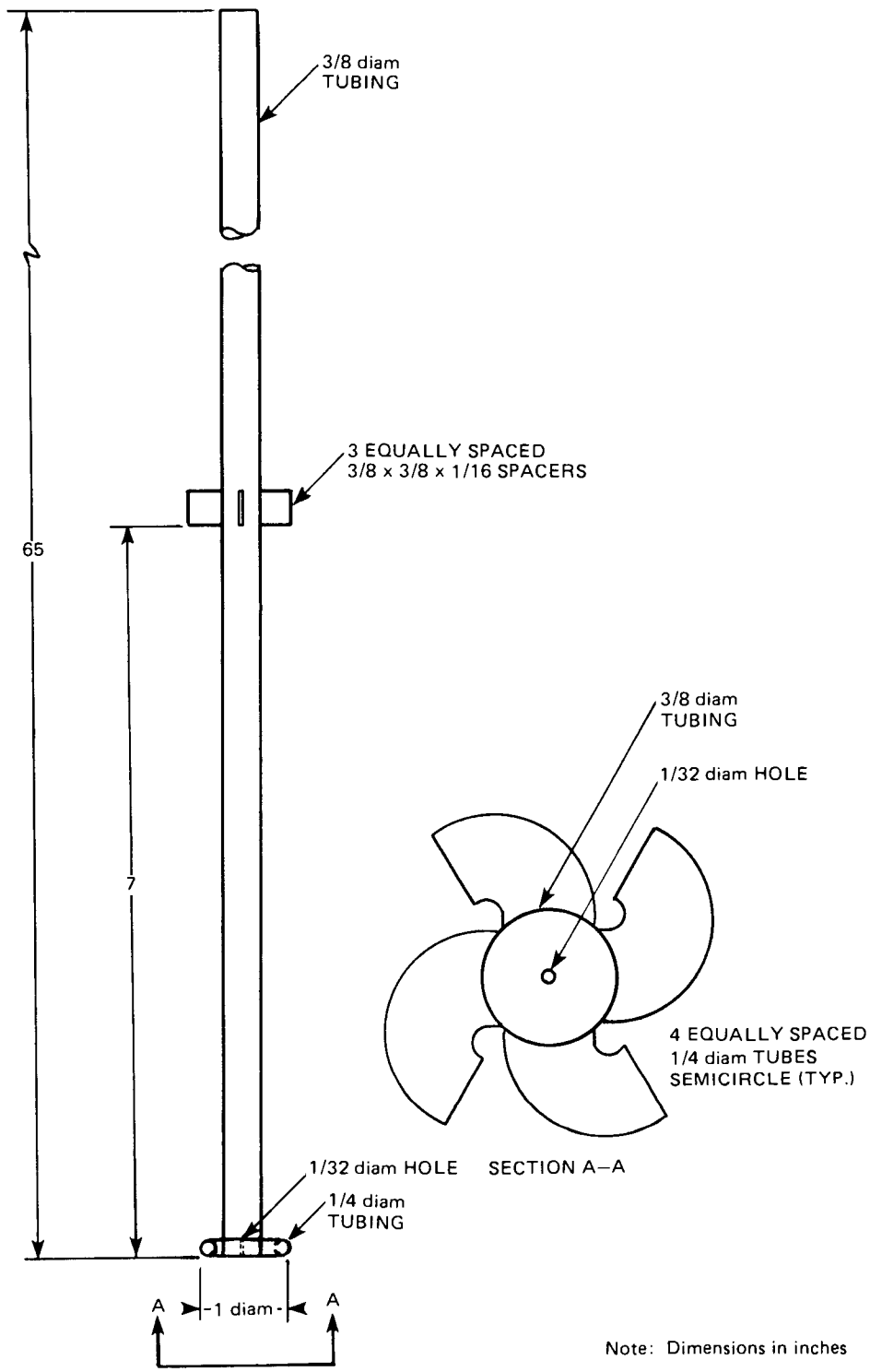

Fig. 2.8. Spider sparge tube design.

ORNL–PHOTO 1412–81

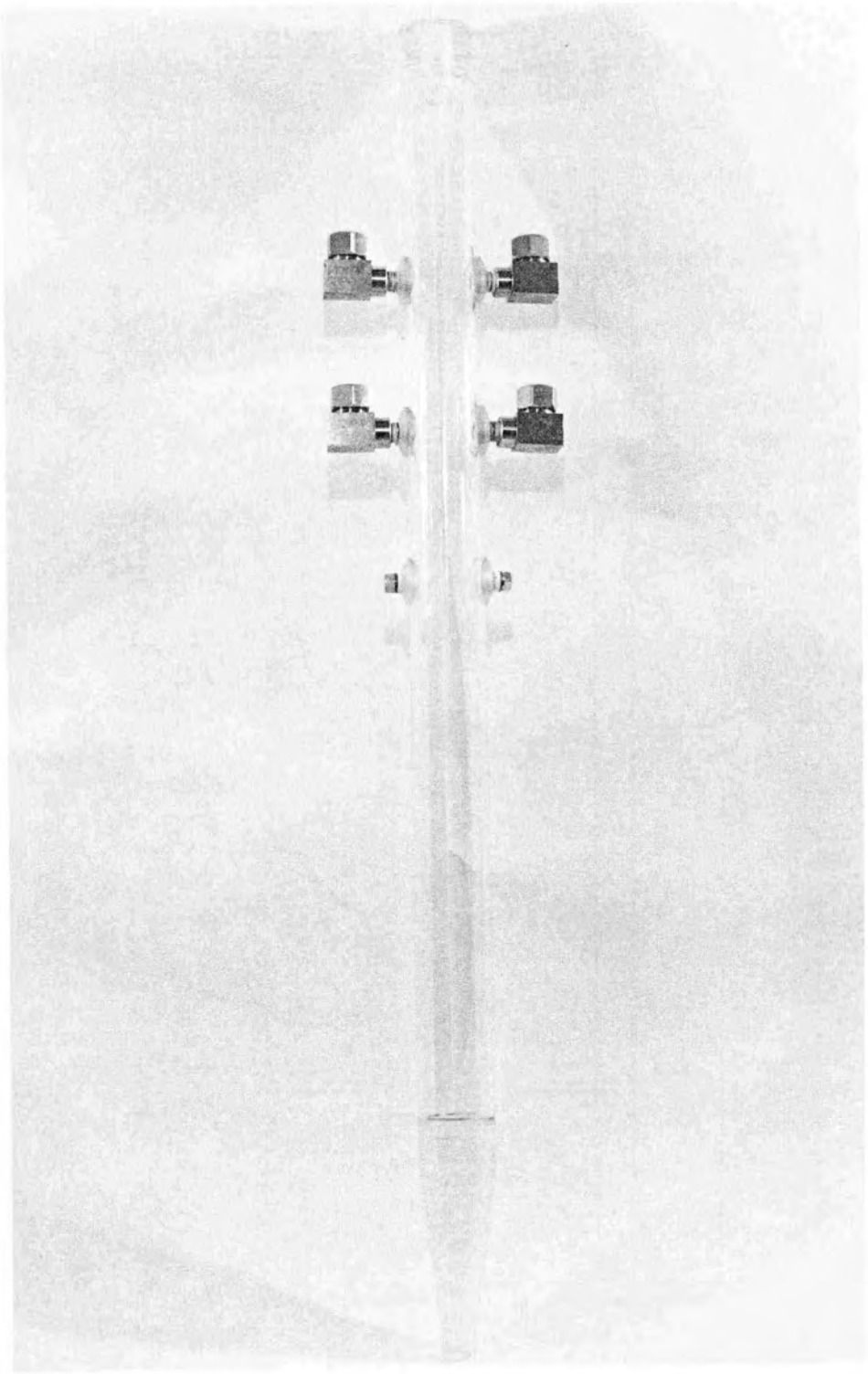

Fig. 2.9. Pulse tube with nozzle outlet.

ORNL–PHOTO 7962–80

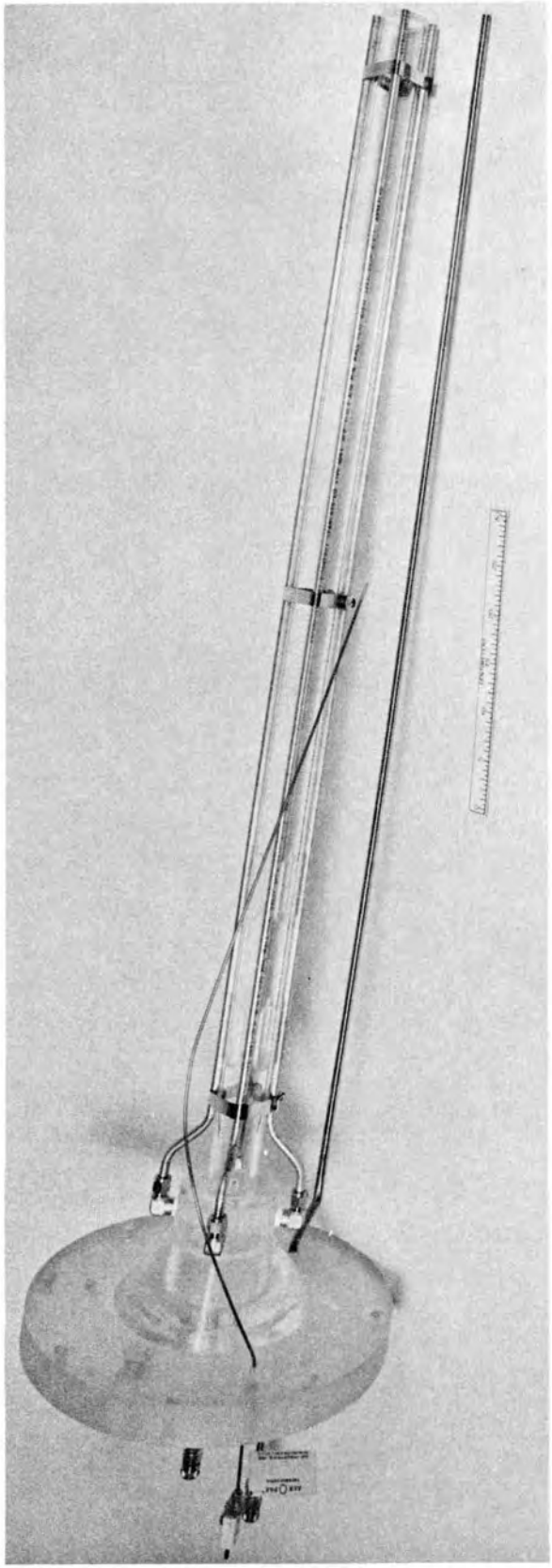

Fig. 2.10. Four-air-supply lift-tube agitator and tank-top assembly.

ORNL–PHOTO 7961–80

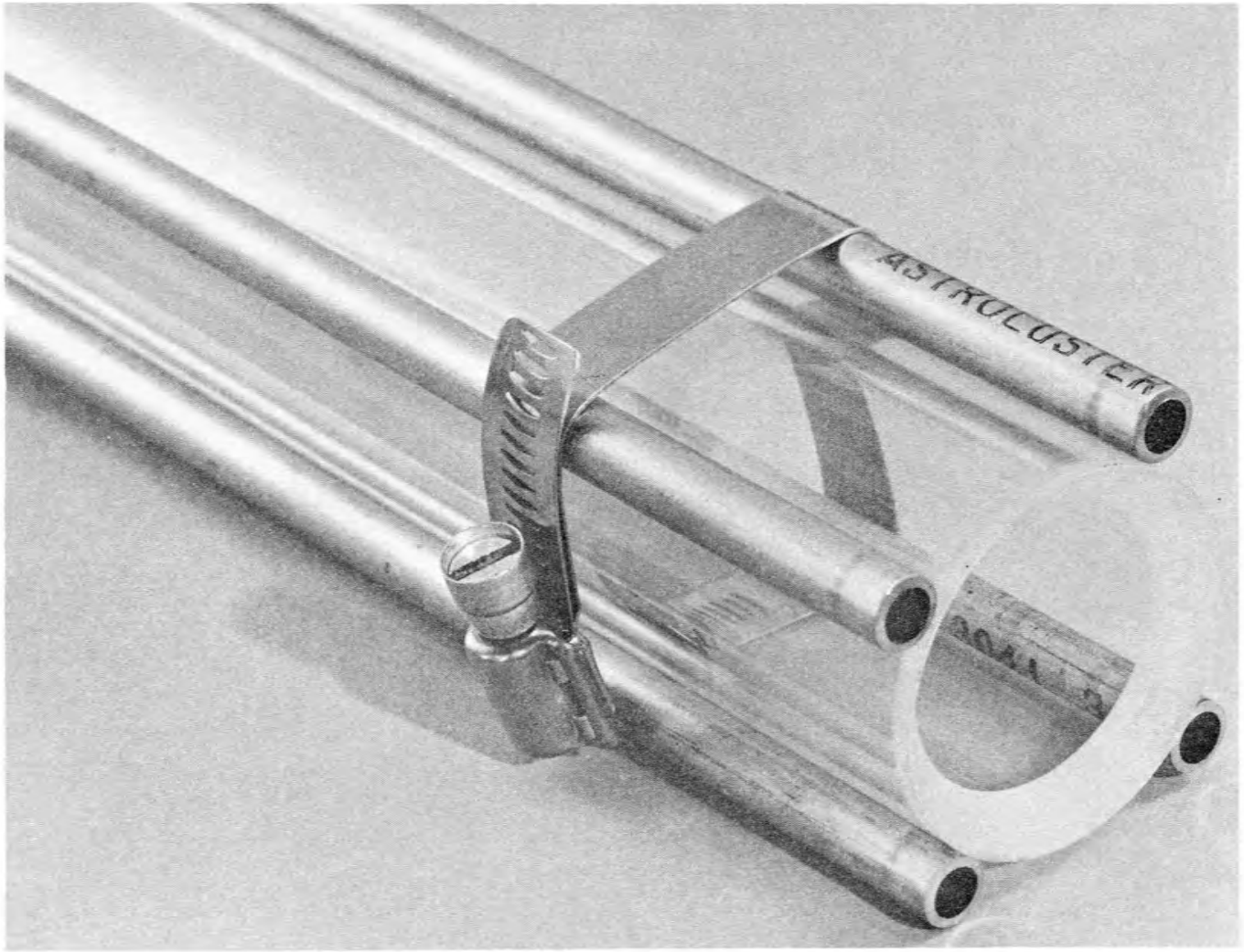

Fig. 2.11. Air-supply tubes for four-air-supply lift-tube agitator.

ORNL–DWG 86–6781

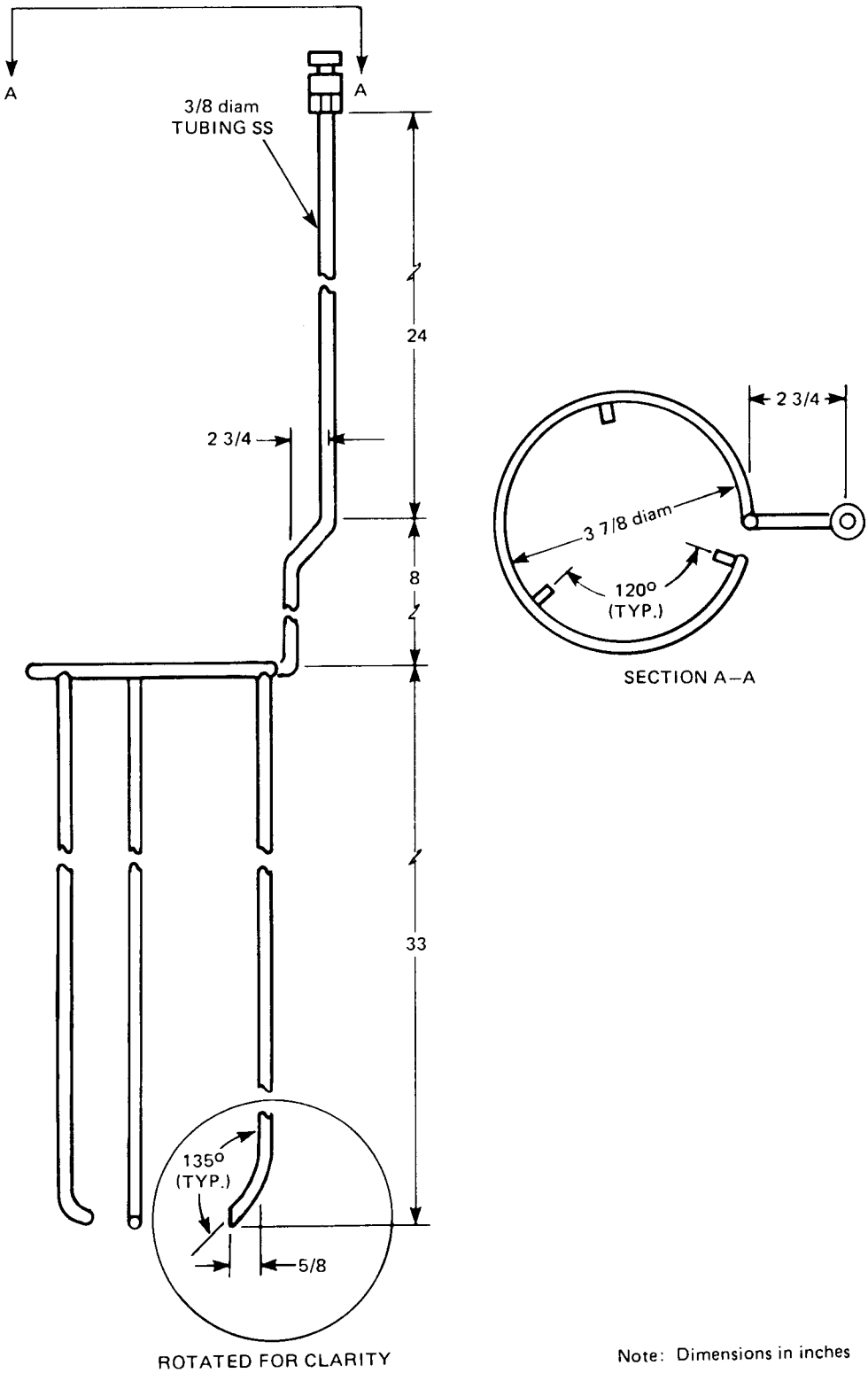

Fig. 2.12. Air-supply design sketch for the three-air-supply agitator.

ORNL–PHOTO 5001–81

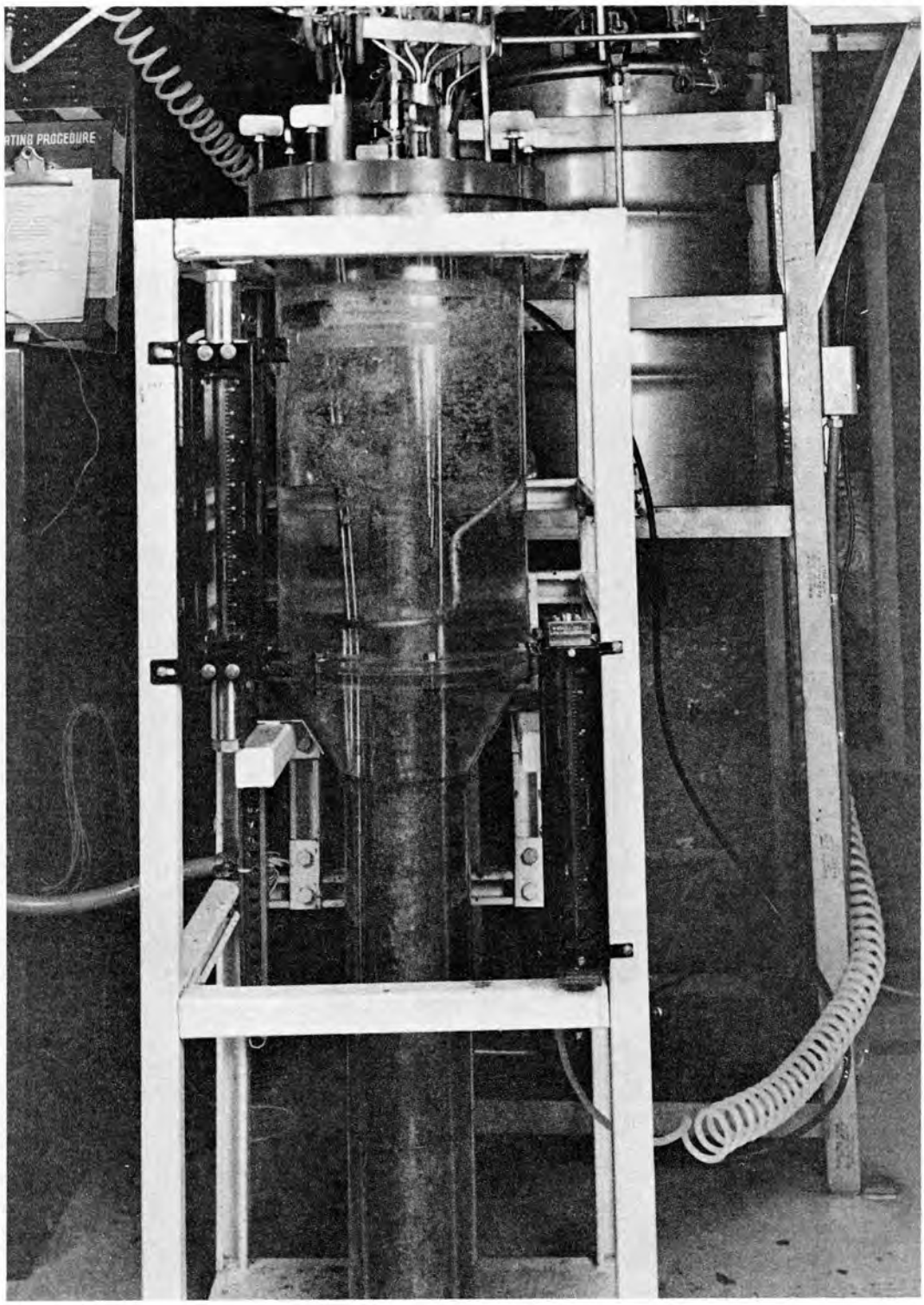

Fig. 2.13. Three-air-supply agitator installed in the short digester tank model.

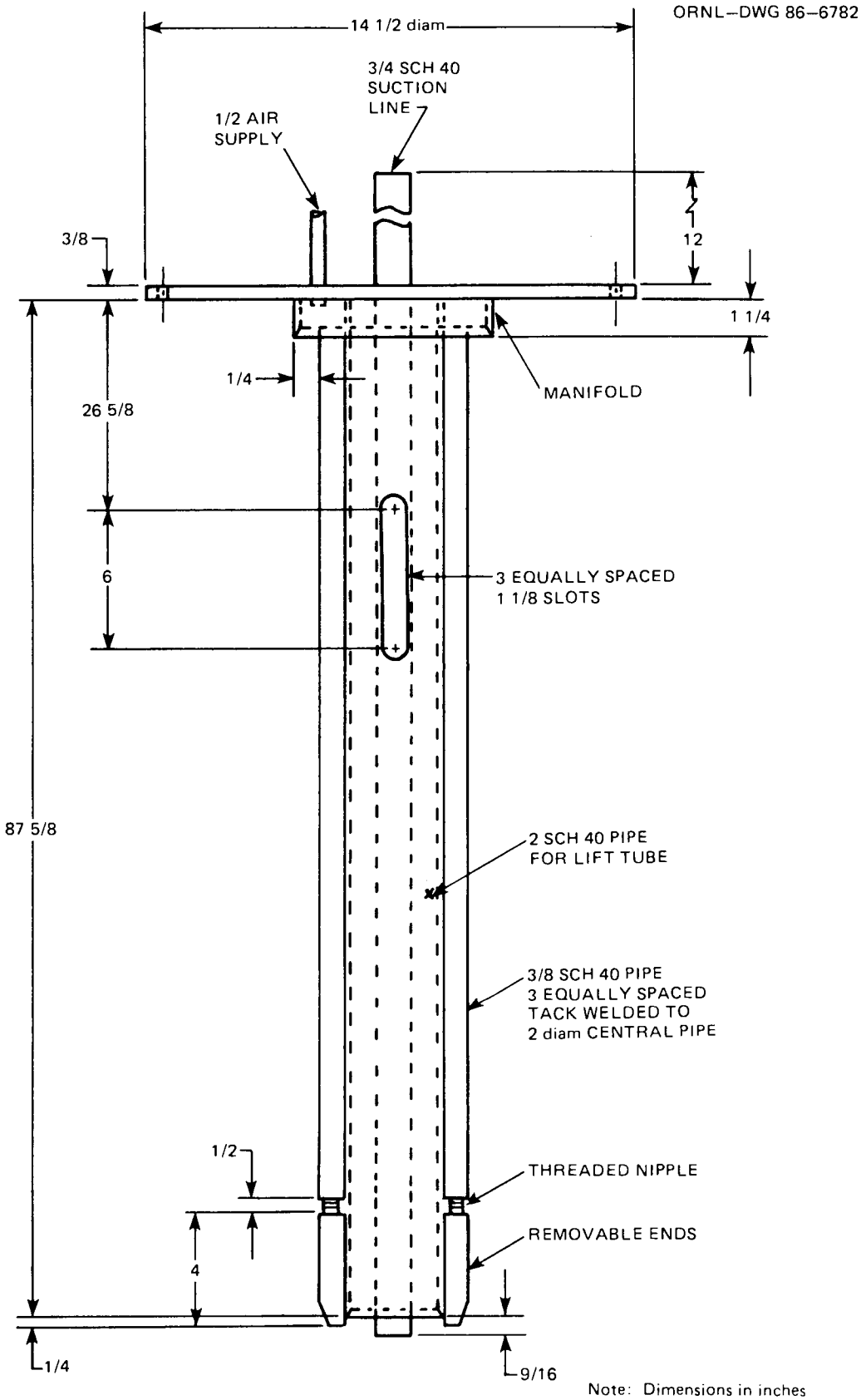

Fig. 2.14. Three-air-supply recirculator design with a 2-in. Sch 40 stainless steel lift tube.

various types and orientations of air-delivery tubes could be studied. The air-supply-tube designs shown in Fig. 2.15 were tested. The actual tubes used in the experiments for models A through D are shown in Fig. 2.16.

A combination of the pulse tube and air lift, referred to as an annular air-supply lift tube, was also studied. The annular air-supply lift tube (Fig. 2.17) consists of two concentric Plexiglas tubes of 2 and 3 in. OD. In this design, the central tube acts as a draft tube with air being supplied through the top of the device and channeled to the central lift tube via the annular space between the concentric tubes. This device can be operated exclusively as an air lift, or the area between the concentric tubes can be periodically vented and filled with liquid like the pulse tube. The liquid in the annular space is then displaced by a surge of pressurized air. The combination of liquid surging against the bottom of the tank and the liquid flow rate created by the air lift was expected to be an improvement over both the multiple air-supply lift tubes and pulse tubes.

2.4 FLUID/SOLID TRANSFER STUDIES

In these tests a known quantity of liquids and solids was added to the tank and then transferred using a steam jet supplied with <80-psig steam. The steam jet was centrally located with a 0.75-in.-diam suction line in the center of the lift tube for the air-lift circulator in the tall digester tank model. The jet was a Penberthy* model GH-3/4, sized for a 0.5-metric ton/d heavy metal throughput. The contents of the tank were well mixed both before and usually during the transfer. The solution transferred from the digester was collected in a vented 55-gal drum and periodically sent to the building waste tank. After the transfer operation, the end of the tank was removed, and the amount of material remaining was measured. Any solids remaining in the tank were rinsed into a receiver and then concentrated by filtration. The solids were then dried and weighed to determine the solids-removal efficiency. The dilution level was determined by either integrating the steam input flow as measured by an orifice flow meter in the steam supply line or by using the difference in the weight of the contents of the receiver and digester tanks before and after the transfer to arrive at the amount of water added during the transfer. The quantity of water added during the transfer was then divided by the initial mass of solution in the tank to give percent dilution.

2.5 LEVEL/DENSITY MEASUREMENT STUDIES

Level and density measurements were made on the solution in the tall digester tank using three air bubbler tubes and two differential pressure (DP) cells. Two of the bubbler tubes were positioned a fixed distance apart (~10 in.) and were used to measure solution density by pressure difference. A single level bubbler extended to near the bottom of the tank. The pressure difference reading for the level measurement was between the bubbler output and the atmosphere. The output from the two DP cells was recorded on a strip-chart recorder so that the fluctuations in the level and density readings could be recorded

*Penberthy Division, Houdaille Industries, Inc.

ORNL–DWG 86–6783

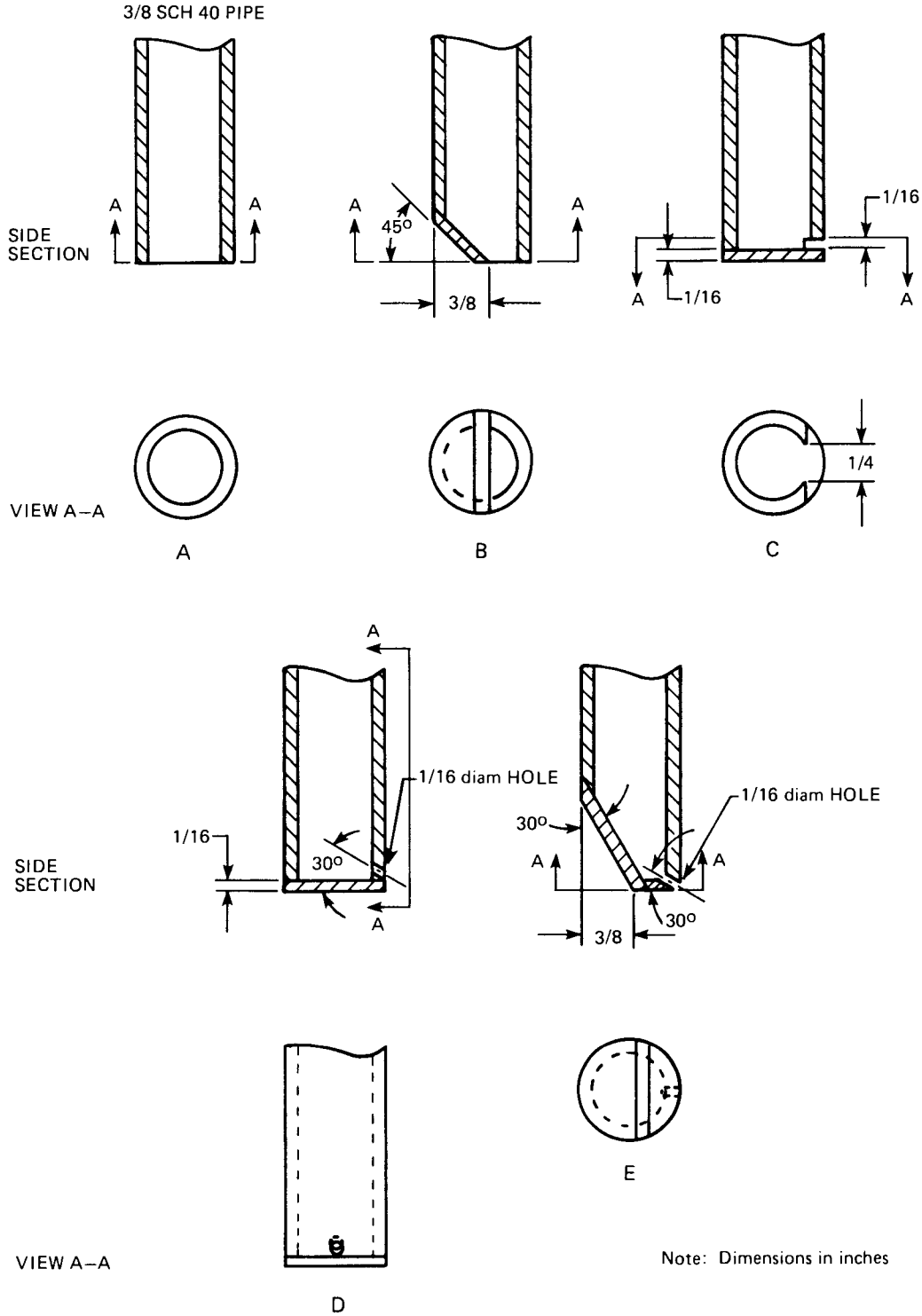

Fig. 2.15. Air-supply-tube outlet designs.

ORNL–PHOTO 4518–82R

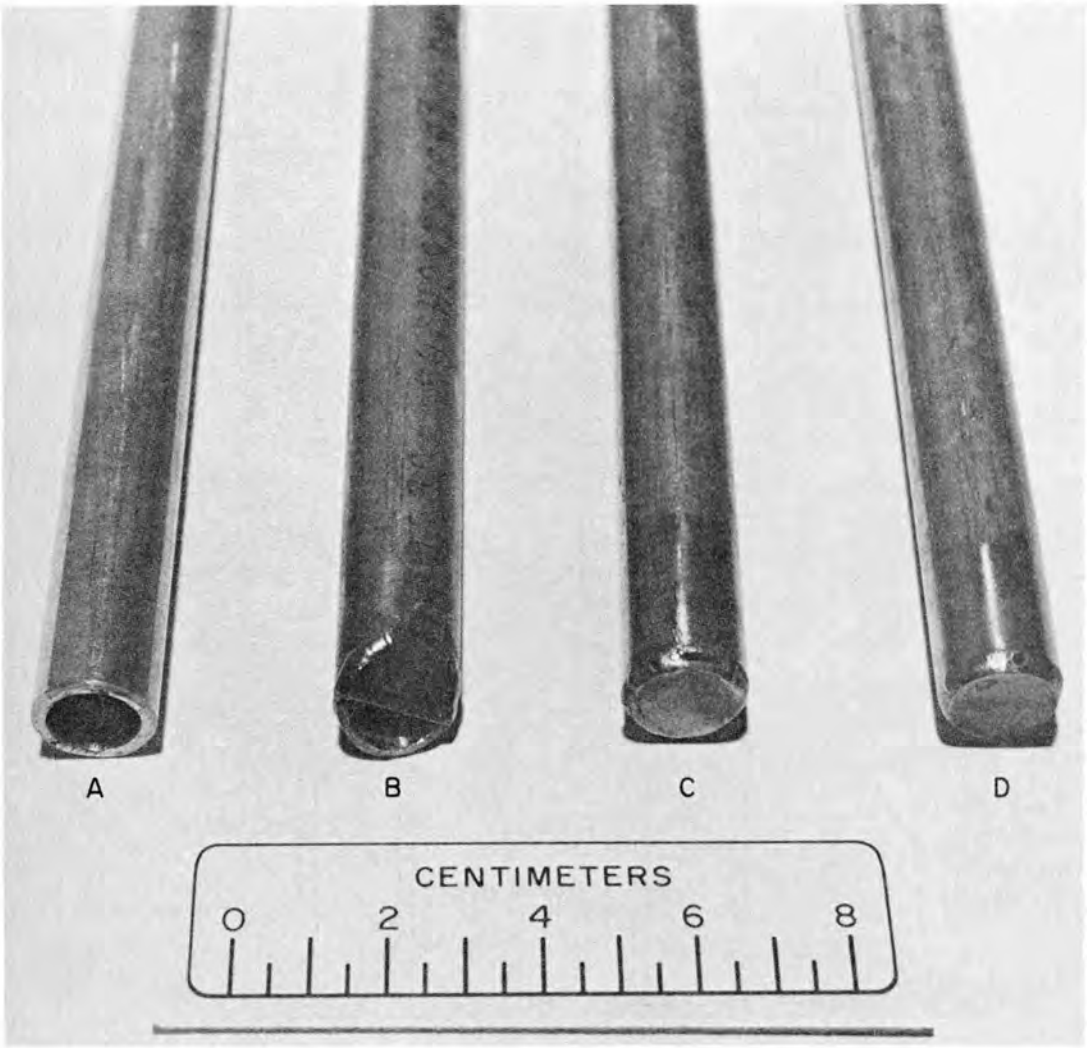

Fig. 2.16. Actual air-supply tubes used in the solids suspension tests.

for a variety of operating conditions. The calibration ranges for the density and level measurements were 0.5 to 1.5 kg/L and 0 to 120 in., respectively. Standard air-flow rates of ~0.2 scfh per bubbler were used. Various bubbler tube designs (Fig. 2.18) were tested in an effort to minimize the fluctuations in the level/density readings caused by the operation of the air-lift circulator. The level/density readings were usually recorded during the solids suspension and transfer experiments.

ORNL–DWG 81–10607R

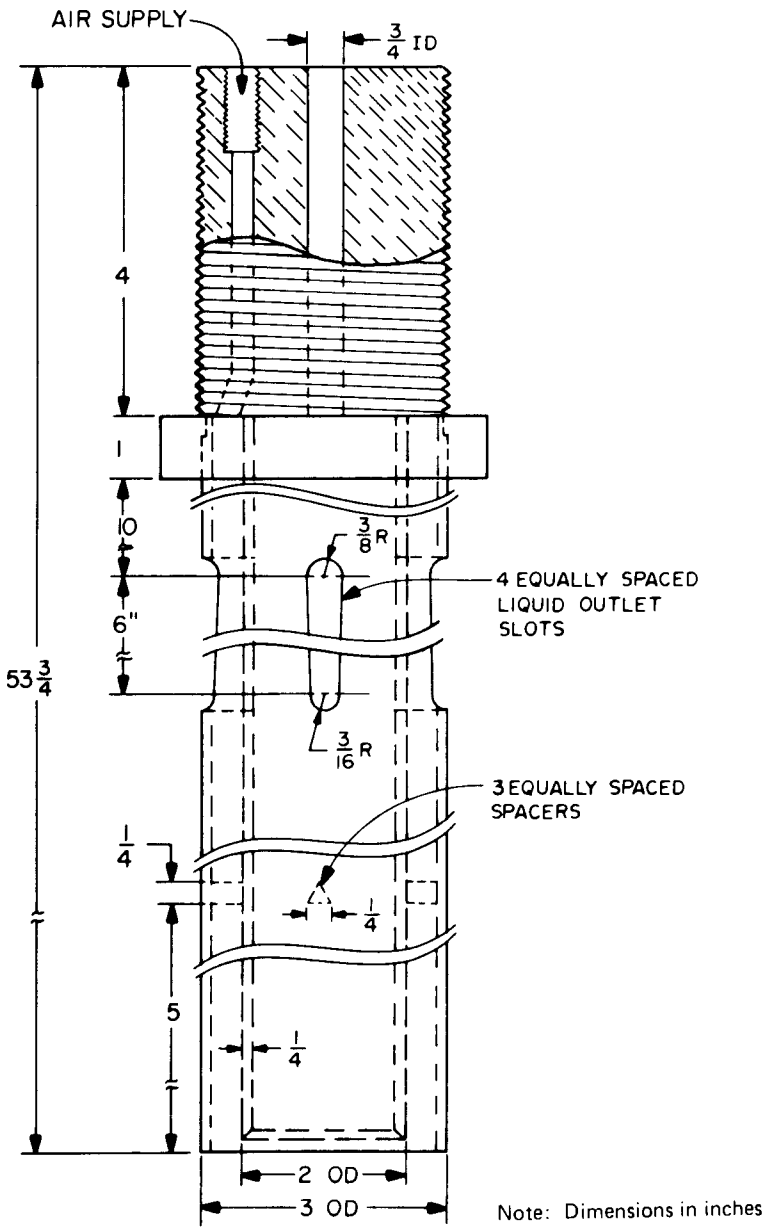

Note: Dimensions in inches

Fig. 2.17. Annular air-supply lift tube.

ORNL–PHOTO 5518–83R

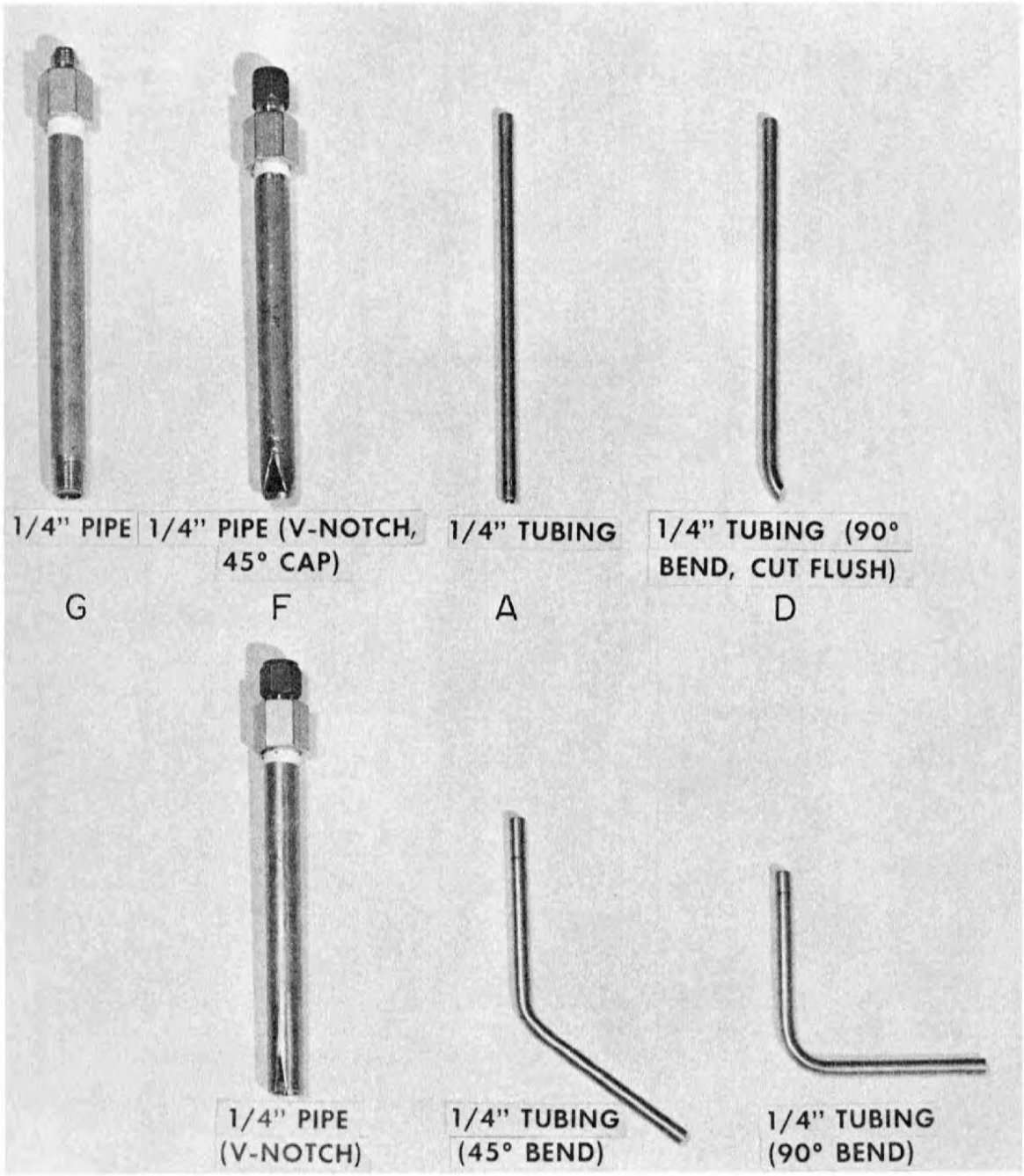

Fig. 2.18. Level/density bubbler tubes.

3. DISCUSSION OF RESULTS

Presented in this section are the discussions of the results obtained in experiments conducted with both the short digester tank and the tall digester tank. All the data for the experiments are summarized in Appendixes A, B, and C. Appendix A summarizes the results from those experiments in which no samples were taken, Appendix B summarizes the results for the solids suspension tests in the short digester tank, and Appendix C summarizes the results for the solids suspension tests in the tall digester tank.

3.1 SHORT-TANK STUDIES

The short-tank studies were conducted using the test tank shown in Fig. 2.1. Both sampling and light-transmission techniques were used in determining the level of solids suspension. The use of the light-transmission technique was discontinued after 38 runs because of high failure rates and difficulty in maintaining calibration.

3.1.1 Scouting Tests

The first 38 runs and various miscellaneous tests are summarized in Appendix A. These runs were primarily scouting tests to determine the most efficient means of solids suspension. In each of these tests a batch of ~42 L of calcium nitrate solution with a specific gravity of ~1.33 was used to simulate the density of the dissolver solution. In the first 37 tests, 168 g of tungsten powder (<27-μm diam) were added to the digester tank every 6 min to give a final concentration of 20 or 24 g/L.

The perforated foot-piece air-supply lift tube did not provide sufficient agitation directly beneath the foot-piece. This effect led to the accumulation of solids on the bottom of the tank; this accumulation was most evident in tests with the large (1190- to 4750-μm) stainless steel particles. The spider sparge lift tube provided a reasonable level of solids suspension for the tungsten particles in that most of the solids were continually being swept from the bottom of the tank as a result of the swirling motion imparted to the liquid by the agitator. The large stainless steel particles were not suspended as well as with the perforated foot-piece lift tube design. The 1-in.-ID pulse tube agitator performed similarly to the spider sparge lift tube. The large stainless steel solids were lifted only a few inches from the tank bottom before falling back.

During the large stainless steel particle tests with the perforated foot-piece air-supply lift tube, a satellite air-supply tube was used. The performance of the lift tube was improved such that most of the solids were suspended, with only a small pocket of material

remaining on the bottom of the tank opposite the air-supply line. When two external air-supply lines were used, all the solids were suspended even without the use of the centrally located perforated foot-piece air-supply tube. The solids were in rapid motion in the tank, starting with a swirling motion in the bottom of the tank; were transported up the lift tube; were expelled from the overflow slots in the lift tube; and then free-fell to the bottom of the tank. This agitator performed better than any of the others tested, particularly with the large stainless steel particles.

Because the performance of the dual air-supply lift tube was so promising, it was suspected that even better performance could be achieved through the use of an annular air-supply lift tube, where instead of two or three discrete air-supply lines, a continuous flow of air around the perimeter of the lift tube was provided. Therefore, after several solids suspension tests with different multiple air-supply lift tubes, an annular air-supply lift tube was built and tested. The test results with this device indicated that large stainless steel particles 1190 to 4750 μm diam were difficult to suspend completely and that occasionally they would settle to the bottom of the tank and stay there. There were also problems with pockets of solids becoming lodged in one area of the tank bottom. Because the air flow was not directed in a high-velocity stream, these pockets of large-diameter solids remained, and the air flow from the annulus bypassed the obstruction, taking the path of least resistance. Use of this agitator would require screening the material entering the digester to eliminate the large-diameter solids.

3.1.2 Solids Suspension Studies

Three tube bundles with four lines each were used to withdraw 12 samples for analysis in each test. The approximate location of each sample point for the short digester tank is shown in Fig. 3.1. The data from the short digester tank tests are summarized in Appendix B. The data summary in Appendix B consists of the run number, specific gravity of the solution, elevation of the tank lid above the tank, air flow, solution volume, average input solids concentration, percent suspension, percent error, the length of time the air flow was on, the length of time the air flow was off (between on times), and a list of nine codes that describe the run conditions. Only the first three digits of the run number are listed; whenever two identical run numbers are given, the runs following the first one are either repeats or were conducted at only slightly modified conditions. Table 3.1 gives a summary description of the equipment tested in each run with the short digester tank.

3.1.2.1 Four-air-supply lift tube

The initial tests with the four-air-supply lift tube agitator were conducted using an uninterrupted air flow. The air flow from the four 0.25-in. tubing air-supply lines was directed straight down toward the bottom of the tank. The solids used in these tests were tungsten powders less than ~27-μm diam. An air lift was established generally within a few seconds of starting the tests but only after a minimum air flow of ~30 L/min was used. This particular agitator design did not incorporate a central steam jet suction line for removal of solution; instead, an external suction line (outside the lift tube) was employed for this service.

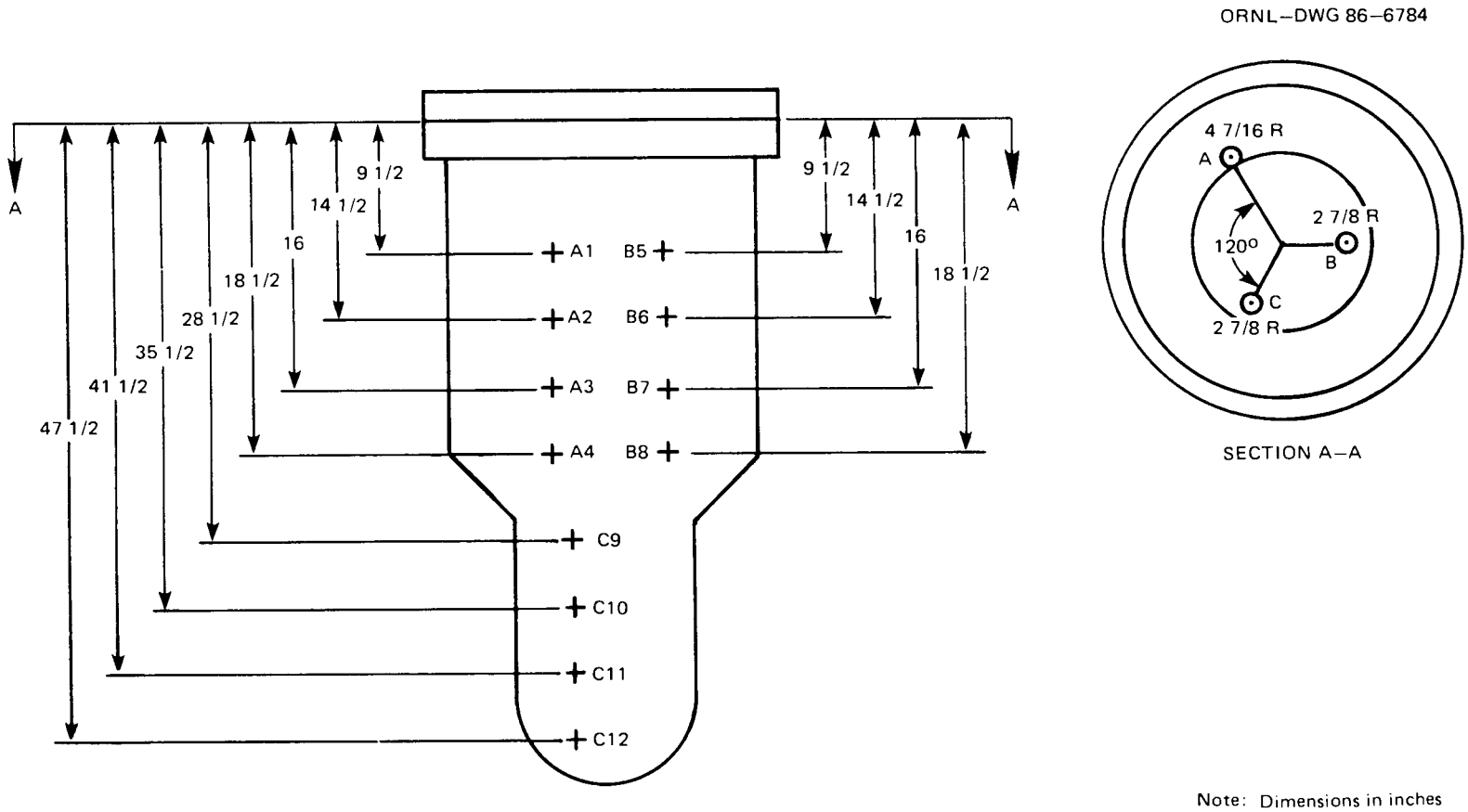

Fig. 3.1. Approximate locations of short-tank sample points.

Table 3.1. Summary description of the equipment studied in the experiments where sampling was used in the short digester tank

Run No.	Equipment studied
140–188	Four-air-supply lift tube, 1.5-in. ID, 8 overflow slots, 0.375-in. tubing air supply line (Figs. 2.10 and 2.11) with 0.25-in. outlets
189–209	Same as 140–188, except the ends of the 0.25-in. tubing air-supply lines were bent ~15°
210–217	Pulse tube, 2.5-in. ID, with nozzle outlet as shown in Fig. 2.9
218–228	Same as 140–188, except 1-in. pipe in center of lift tube served as steam jet suction line
229–249	Annular air-supply lift tube as shown in Fig. 2.17
250–278	Three-air-supply lift tube, 2.5-in. ID, 4 overflow slots
279–286	Same as 250–278, except used cuspidal tank bottom
287–348	Same as 250–278, except used modified pipe-cap tank bottom

All air flow measurements in the short-tank tests were made using a rotameter calibrated for atmospheric pressure. The reported air flow rates have not been corrected for any back pressure downstream of the rotameter. It was assumed that the resistance to flow beyond the rotameter was negligible because relatively low flow rates and large flow area were typically employed. However, in the cases where relatively small flow areas were used, the back pressure may have been significant—which implies that the reported air flow rates may be too low.

The variables studied with the four-air-supply lift tubes included air flow rate, solids concentration, separation between the lift tube and tank bottom, air-supply tube modifications, density, and use of a central jet suction line.

Tungsten solids concentrations from 5 to 20 g/L in calcium nitrate solutions were studied. At the lower solids concentrations (5 to 10 g/L), the solids suspension levels were slightly less sensitive to air-flow rate variations (Fig. 3.2). With a solids concentration of ~20 g/L, increasing the air flow rate tended to improve the solids suspension level and recirculation rates, although the data for the 10- and 20-g/L runs (Fig. 3.2) do not show significant differences. The percent variation as defined by Eq. (2) for the runs in Fig. 3.2 varied from 3.8% to 12.5% for the 20-g/L runs and 3.3% to 5.6% for the 10-g/L runs. The smaller percent variation values for the 10-g/L runs indicates more uniform suspensions, somewhat easier to maintain than in the 20-g/L runs.

The effects of varying the separation between the lift tube and the bottom of the tank are illustrated in Fig. 3.3. The separation is the minimum distance between the end of the lift tube and bottom of the tank through which all fluids and solids must pass. These runs

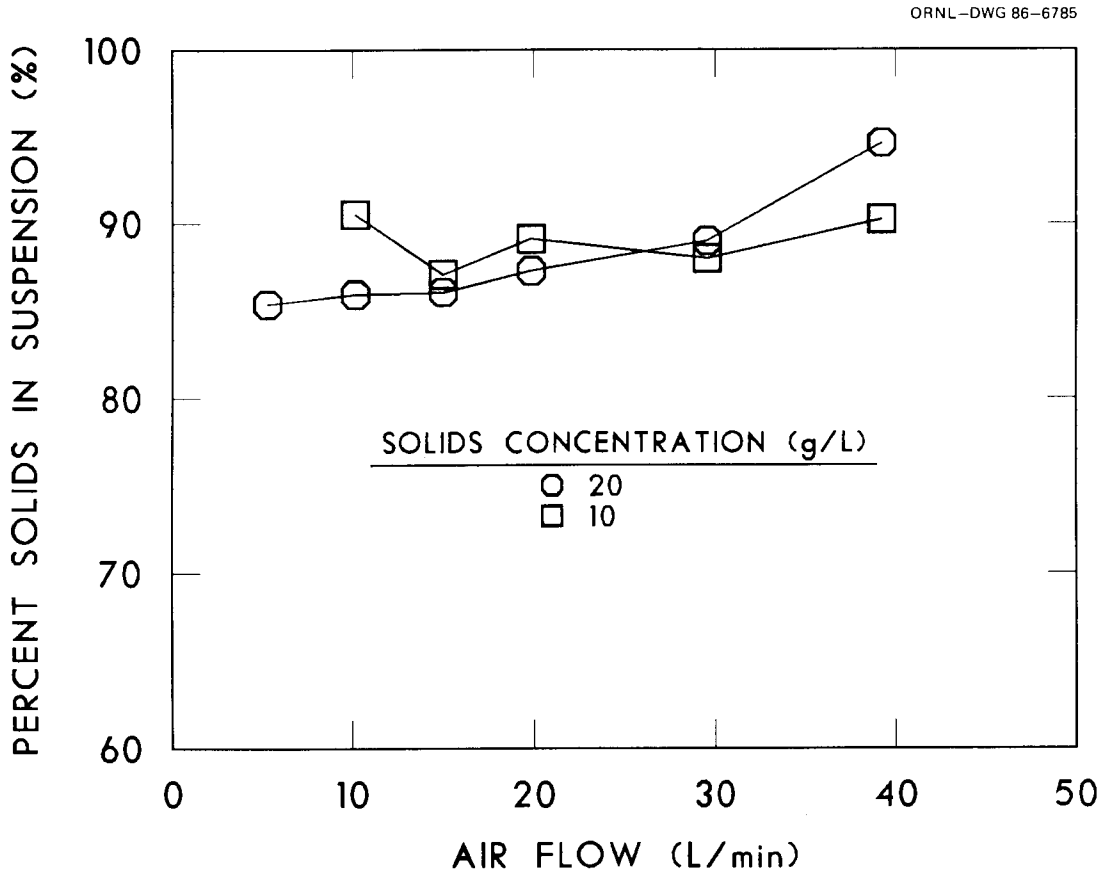

Fig. 3.2. Variation of solids suspension level with air flow and solids concentration using the four-air-supply agitator.

were conducted using a spherical tank bottom with an inside radius of ~6.99 cm. As shown in Fig. 3.3, the optimum separation between the lift tube and tank bottom lies between 1 and 2 cm. This separation is a result of the optimization of fluid velocities and pressure drop through the separation. The percent variation values for the data given in Fig. 3.3 varied widely, ranging from 1.9% to 23.4%. The larger separations resulted in the greatest percent variations and, therefore, less uniform solids suspension. The optimum separation between the lift tube and tank bottom, relative to the minimum percent variation, was located between 1 and 2 cm, as was the case relative to percent solids in suspension.

Two types of air-supply tubes were studied with the four-air-supply lift tube. Most of the experiments were conducted using straight 0.25-in. air-supply tubes as shown in Fig. 2.11. The straight air-supply tubes were replaced with 0.25-in. tubing with the ends bent ~15° from vertical. The bent air supply tubes gave a more directed flow and made start-up easier. Using the bent air supply lines, it was not necessary to increase the air supply pressure to 60 psig to accommodate start-up.

Generally, dissolved fuel solutions have specific gravities in the range of ~1.3 to 1.5. The solids suspension experiments with the four-air-supply lift tube used either water with a specific gravity of 1 or calcium nitrate solution with a specific gravity in the range of 1.3

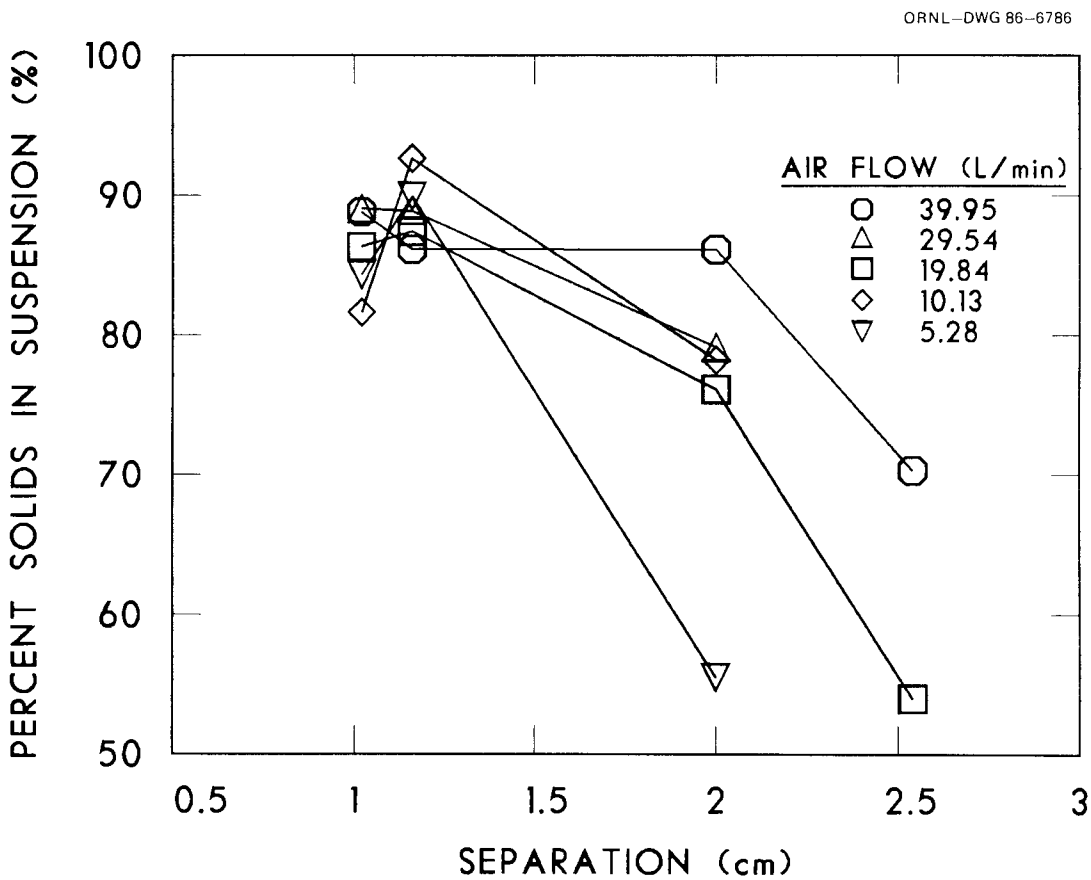

Fig. 3.3. Variation of percent solids in suspension with separation between the four-air-supply lift tube and tank bottom at various air flow rates.

to 1.37. Because settling velocities of particles are inversely proportional to both solution density and particle size, it was not surprising that generally the four-air-supply lift-tube agitator maintained more solids in suspension with the calcium nitrate solution than with water.

Initially, a suction line outside the lift tube was used to remove solution from the tank because it was expected that a central suction line would interfere with solid recirculation. Two sizes of central suction lines were studied—0.375-in. tubing and 1-in. Sch 40 pipe. Based on a limited number of experiments with the two suction lines, the solids suspension performance of the four-air-supply lift tube was degraded when a central suction line was used. The larger suction line tended to degrade the solids suspension performance more than the smaller line.

3.1.2.2 Pulse tube with nozzle

An eight-run screening design experiment was made using the nozzle pulse tube shown in Fig. 2.9. The screening design experiments were done to determine the effects of air flow on-time, air flow off-time, specific gravity, solids concentration, off-the-bottom distance, and type of solids on solids suspension level. The results from the screening design

were not conclusive because of large interaction effects among the variables; however, it was noted that the pulse tube performed very well with the small-diameter (<80-μm) tungsten and stainless steel solids. Using the pulse tube with a very short (1-s) air flow on-time and relatively long (10-s) air flow off-time resulted in all the solids remaining suspended in the bottom ~1 ft of the tank. This effect allowed nearly complete removal of the solids from the tank upon transfer.

3.1.2.3 Annular air-supply lift tube

The scoping tests conducted with the annular air-supply lift tube showed poor suspension of large-diameter solids (1190 to 4750 μm). Small-diameter dense solids (<27 μm tungsten) were easily suspended using an intermittent air flow producing solids suspension levels in the range of 90% to 99%. The presence of the 1-in. Sch 40 suction line in the center of the lift tube did not seem to interfere with solid suspension performance with the tungsten solids. Referring to the run summaries in Appendix B for runs 233 through 239, variation of the air flow on-time showed only a slight tendency toward better solids suspension performance at low on-time values. For runs 240 through 249, the air flow on-time was set at 4 s, while the air flow off-time was varied from 1 to 10 s. Lower off-times gave more uniform suspensions as indicated by small percent error values. These results tend to indicate that relatively short-duration, rapid-cycle air flows are preferred for the operation of the annular air-supply lift tube.

The spacer-wire-handling ability of the annular air-supply lift tube was also studied. Spacer wires (Fig. 2.3) from the sheared fuel pins may enter the digester tank and, therefore, must be agitated along with the fuel particles. However, the annular air-supply lift tube could not reliably suspend sheared spacer wires when 100 g were added to the digester tank. The bulk of the wires remained on the bottom of the tank, serving to trap small particles that were normally easy to suspend.

3.1.2.4 Three-air-supply lift tubes

The three-air-supply lift tube agitator was designed and tested based on the assumption that spacer wires would be fed to the digester tank with the fuel solution. The overflow slots in the lift tube were 1.125 in. wide to easily accommodate 1-in.-long spacer wires. Also, the large-diameter (2.5-in.-ID) lift tube was specified to minimize resistance to flow around a 1-in. Sch 40 central ejector suction line.

Several operational parameters, as well as design variables, were studied using the three-air-supply lift tube agitator. The operational parameters studies with this agitator were solids concentration, presence of spacer wires, air flow rate, and foaming. The design variables studied were tank-bottom curvature, eccentricity of the lift tube, and separation between the lift tube and tank bottom. Most of the experiments with the three-air-supply agitator were run using water as the digester fluid and tungsten particles for the solids.

The effect on solids suspension of varying the solids concentration from 5 to 20 g/L at two intermittent air flow rates is shown in Fig. 3.4. The presence of large amounts of solids in the calcium nitrate solution tended to reduce particle settling velocities (because of hindered settling), resulting in more solids remaining in suspension for a given air flow.

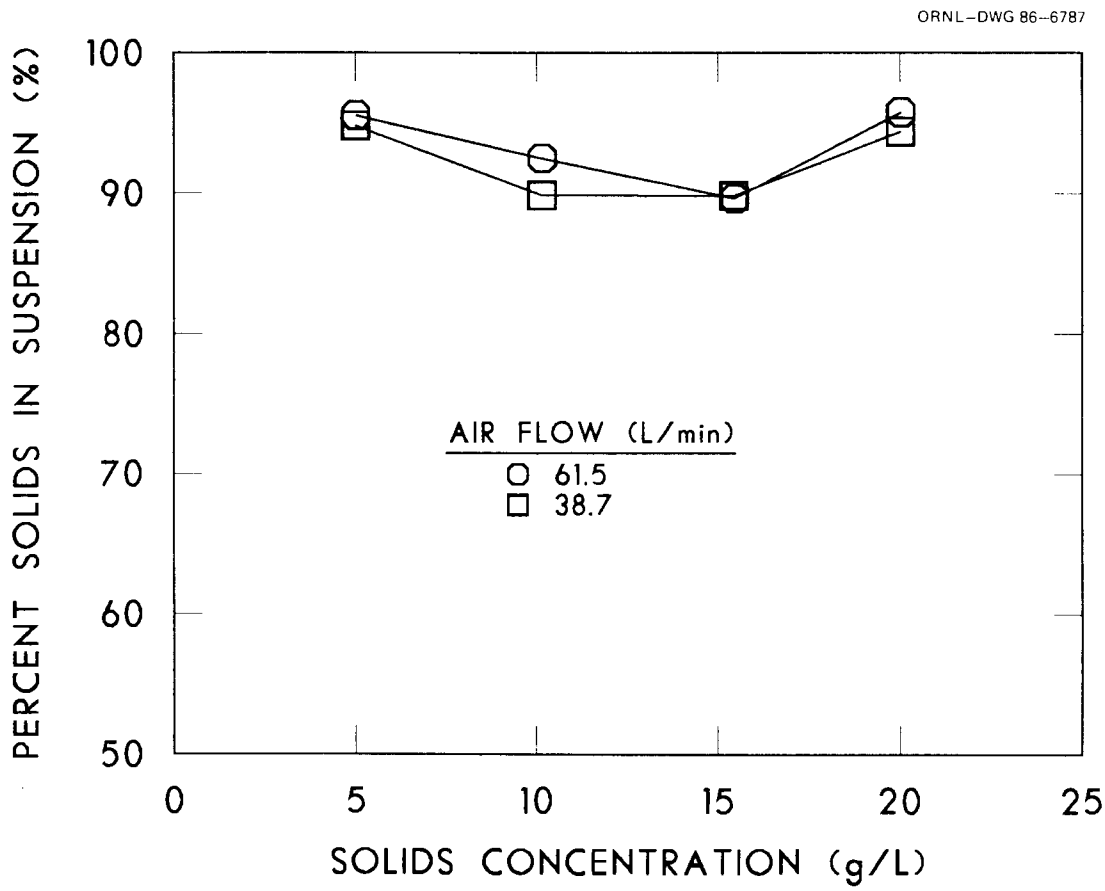

Fig. 3.4. The effect of variation of solids concentration and air flow on solids suspension level with the three-air-supply agitator, 100-g wires, and a central suction line.

With more solids suspended, the effective solution density is increased—which is more conducive to solids suspension. With the lower solids concentrations, there are fewer particles to maintain in solution; thus, the mass of solids per unit fluid volume is less. A smaller mass of solids per unit fluid volume tends to imply greater momentum transport between the moving fluid and solids; therefore, in the absence of hindered settling for a given air flow rate, it is easier to suspend less-concentrated slurries. For the solids concentrations between 5 and 20 g/L, trade-offs exist between the effects of fluid-solid momentum transport and hindered settling. These tests were conducted with 100 g of wires in the tank and a minimum distance of 0.677 cm between the lift tube and bottom of the tank. Variation of the air flow rate from 38.7 to 61.5 L/min had very little effect on the solids suspension level. Based on percent variation values, the uniformity of the solids suspension produced at the 61.5-L/min air flow was consistently higher than that from the 38.7-L/min air-flow runs. Percent variation values ranged from 1.45% to 3.02% for the 61.5-L/min runs and 2.21% to 7.3% for the 38.7-L/min runs. The lowest percent variation values were obtained at the highest solids concentration (~20 g/L), suggesting hindered settling. Solids concentrations of 5, 10, and 15 g/L resulted in about the same value for percent variation.

Three tank-bottom designs (Fig. 2.5) were studied using the three-air-supply lift tube. The effect of tank-bottom geometry on solids suspension level and uniformity is shown in Table 3.2. These tests were conducted using tungsten solids in water without spacer wires.

Table 3.2. The effects of various tank-bottom designs on solids suspension levels

Run No.	Solids concentration (g/L)	Air flow (L/min)	Percent suspension	Percent variation	Bottom design
271	20.0	62.49	97.31	6.94	Spherical
272	20.0	62.49	95.83	6.33	
273	20.0	62.49	93.91	4.60	
274	20.0	62.49	91.83	3.93	
282	5.0	62.49	76.90	4.23	Cuspidal
283	5.0	38.71	77.82	6.09	
284	5.0	62.49	75.34	2.47	
339	20.0	38.71	96.31	5.51	Modified
340	20.0	59.39	98.38	4.59	pipe-cap
341	20.0	38.71	92.98	4.00	
342	20.0	59.39	95.81	4.99	

The separation between the lift tube and tank bottom varied slightly because of differences in bottom designs. The deviation from a uniform suspension was about the same for each bottom tested, with percent variation values around 5%. All the runs were conducted using an air on-time and off-time of 10 and 0.5 s, respectively. A 20-g/L solids run with 100 g of spacer wires was made using the cuspidal-bottom design, but was not included in the table. Addition of the spacer wires improved the solids suspension performance for the cuspidal bottom, but the performance was no better than that exhibited by the other two designs studied. Therefore, based on the results from these tests, the modified pipe-cap bottom was chosen for use in future tests.

Because the digester tanks would be sparged for long periods of time, it was suggested that foaming may be a problem. To simulate foaming, powdered soap was added to the digester solution in runs 267 through 270. Copious quantities of suds were produced as a result of operating the agitator at an air flow of 62.5 L/min. The foam overflowed the tank, carrying with it some of the particulate and slightly degrading the solids suspension performance. While the test solutions used here were not prototypical of actual fuel solution, they revealed the potential problems that could occur in a poorly designed digester tank with insufficient disengaging space. These tests also gave a graphic demonstration of the vigorousness of the agitation.

The effect of sheared spacer wires on solids (tungsten powder) suspension was found to be dependent upon the separation of the lift tube from the tank bottom. The uniformity of the suspension, however, was generally not changed significantly by changes in separation. In the absence of wires, smaller separations of the lift tube from the tank bottom are preferred, as illustrated in Fig. 3.5. Experiments were also run where both the separation and air flow were held constant and the amount of wires was increased from 0 to 100 g. Results from these tests indicated that more wires would probably produce higher levels of solids suspension, as indicated in Fig. 3.6. However, at both a very low separation (0.09 cm) and a relatively large separation (1.81 cm), the results indicated in Fig. 3.6 were not supported, as shown in Table 3.3. It is hypothesized that, at the very low separa-

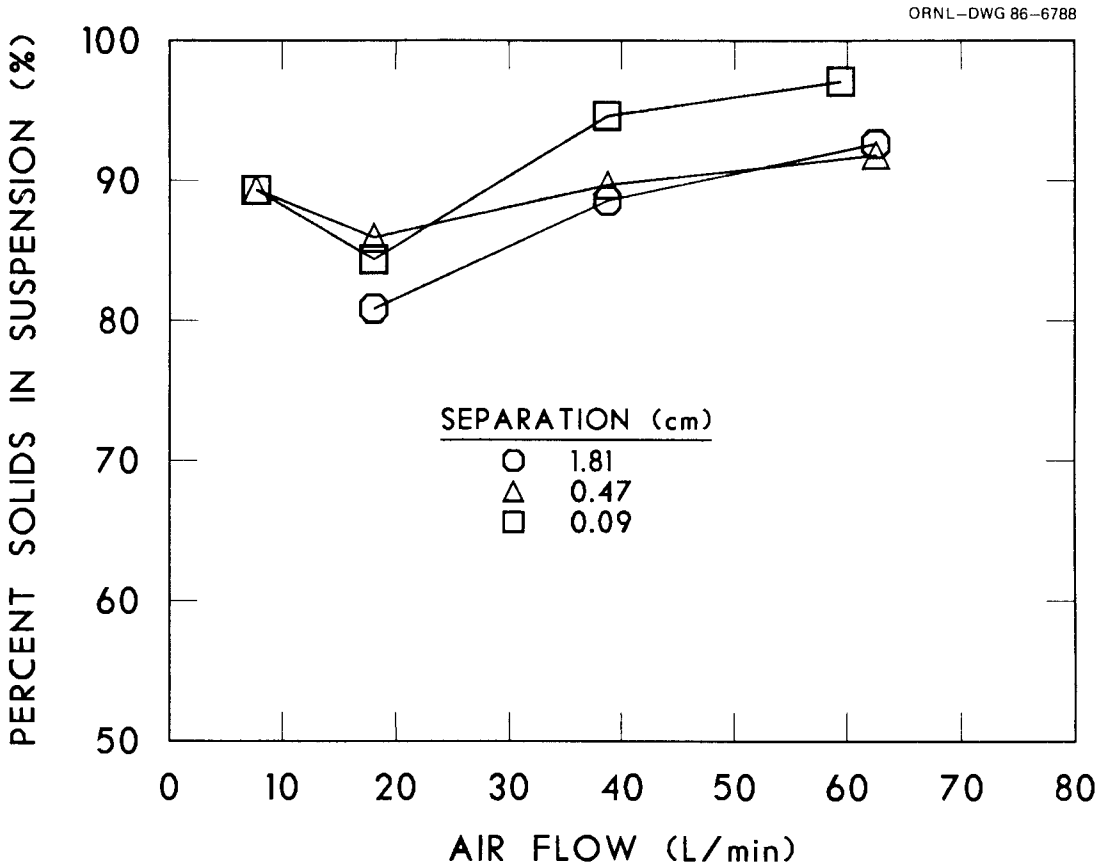

Fig. 3.5. Variation of percent solids in suspension with air flow rate and lift tube separation for the tank bottom in the absence of wires.

tions, the spacer wires restrict the fluid flow at the entrance to the lift tube in the bottom of the tank, resulting in lower fluid velocity and, therefore, less agitation and solids suspension. At the large separations, the distance between the end of the lift tube and bottom of the tank is such that the presence of the wires does not impede fluid velocities and therefore solids suspension to any significant degree. For the intermediate separation (0.47 cm), there appear to be trade-offs between the effects of flow restriction and possibly flow acceleration caused by a nozzle effect resulting from slight reductions in flow areas at the end of the lift tube as the wires are recirculated.

The three-air-supply lift tube agitator had very little difficulty circulating spacer wires throughout the tank as can be seen in Fig. 2.13. However, potential problems, such as plugging the transfer lines from the digester with wires and inefficient removal of insoluble particulate resulting from entrapment by bridged wires in the bottom of the tank, require that steps be taken to eliminate or at least minimize the chance of wires entering the digester.

The effects of the agitator's being eccentric to the digester are shown in Fig. 3.7. The solids suspension levels in Fig. 3.7 are averages of two or more runs in the absence of wires. The result of increasing the eccentricity of the agitator was an almost negligible

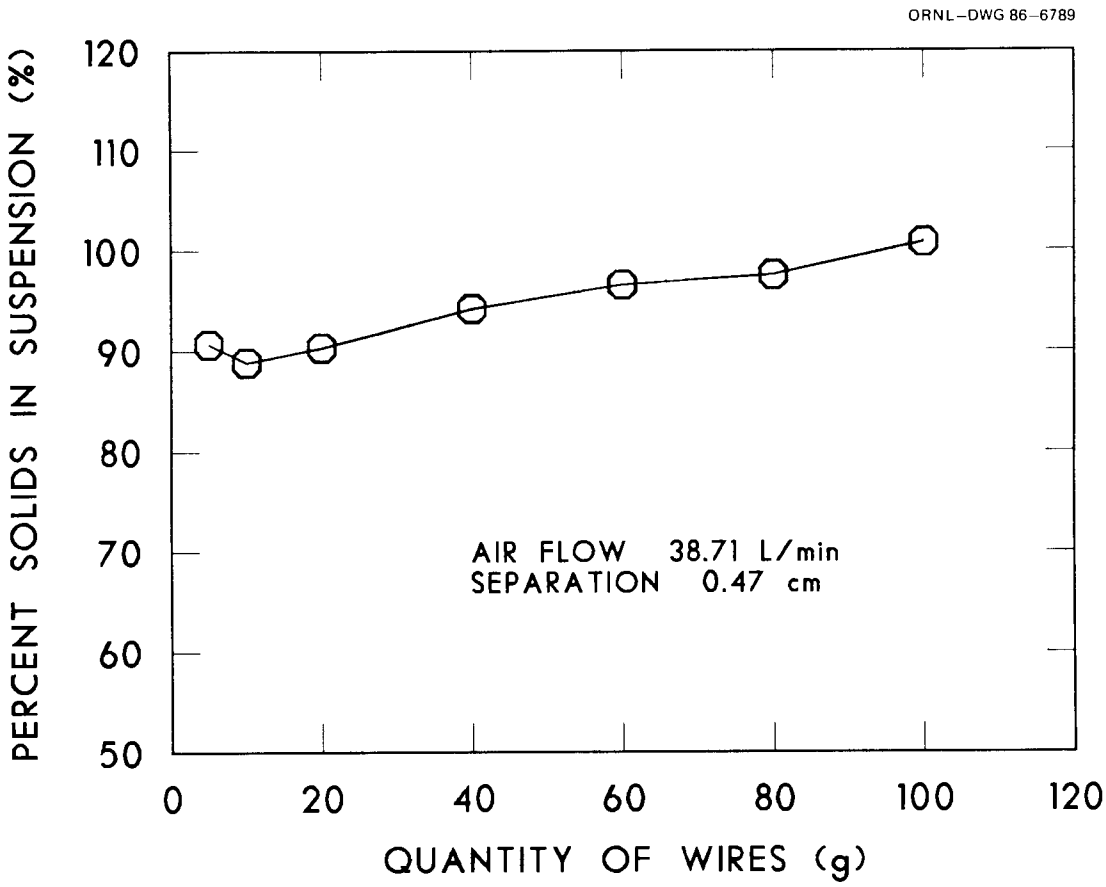

Fig. 3.6. Variation of percent solids in suspension with the quantity of wires in the tank at a constant air flow and separation.

Table 3.3. The effects of lift tube separation from the tank bottom and the presence of sheared wires on solids suspension levels

Run No.	Minimum separation (cm)	Quantity of wires (g)	Air flow (L/min)	Percent suspension	Percent variation
287		0	38.71	88.57	2.58
288	1.81	0	62.49	92.63	2.65
289		0	18.02	80.87	8.63
290		100	62.49	91.04	3.37
291		100	38.71	89.08	2.43
292		100	18.02	75.11	5.63
339	0.09	0	38.71	96.31	5.51
340		0	59.39	98.38	4.59
343		100	38.71	88.05	3.94
344		100	59.39	95.12	3.93

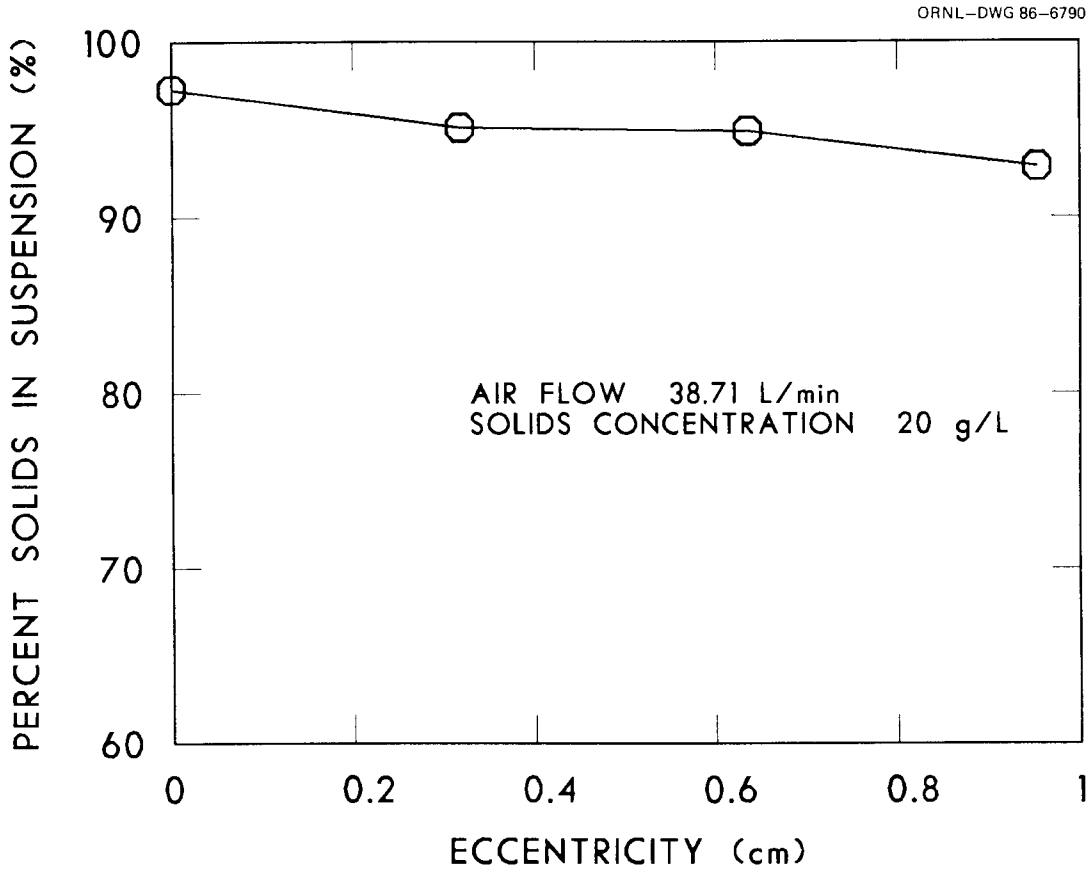

Fig. 3.7. Variation of average percent solids in suspension with the three-air-supply agitator eccentricity.

decrease in solids suspension performance. Decreasing the eccentricity showed a slight improvement in the uniformity of the solids suspension, relative to repeatability.

3.1.3 Summary of the Short-Tank Solids Suspension Test Results

The three-air-supply lift tube performed as well as or better than the other agitators tested in the small digester tank. The external air-supply lines for the lift tube provided a direct source of agitation in the bottom of the tank not otherwise achieved with conventional air lifts. An intermittent air flow rate of ~39 L/min from the three air-supply lines kept the bottom of the tank reasonably free of stagnant regions with a minimum of internal piping. The solids suspension performance of the agitator was not degraded by either the suction line in the center of the 2.5-in.-ID lift tube or the use of a slightly modified pipe-cap as the bottom of the tank. The solids suspension performance of the agitator also was not significantly decreased by a slight eccentricity of the lift tube relative to the tank.

Potential problems related to the presence of sheared spacer wires in the digester and foaming of the fuel solutions exist. Although the three-air-supply agitator was able to suspend spacer wires, steps should be taken to prevent wires from entering the digester because there is a chance that the wires could block the lift tube or the jet suction line.

Use of a coarse screen in the feed line to the digester would eliminate this potential problem. Because the air-lift recirculators provide aggressive agitation, foaming of the fuel solution may also be a potential problem if adequate disengaging space in the top of the digester is not provided.

3.2 TALL-TANK TESTS

The tall-tank studies were conducted using the test tank shown in Fig. 2.2. The tall tank was composed of the short tank with an additional 4.5-ft section attached to the top. The tall tank was used to study solids suspension performance under a variety of conditions, agitator and air supply tube design, level/density probe design, operational effects on instrument readings, and solids transfer efficiency. The air-flow rates reported for the tall tank are more accurate than those for the short-tank tests because back-pressure measurements downstream of the rotameter were used to correct the rotameter calibration data.

The tank design for the tall-tank experiments was not changed significantly throughout the test program. Two multiple air-supply lift tube designs were used, a 2.5-in.-ID plastic pipe design similar to that used in the short-tank tests, and a more prototypic 2-in. Sch 40 stainless steel pipe design. The three-air-supply agitator concept was used exclusively in the solids suspension studies. Some scouting tests, however, were done using a single air supply down the center of the lift tube.

The tall-tank study was done to determine the effectiveness of the air-lift recirculator, developed in the short-tank tests, in a tank with a height more prototypical of a 0.5-metric ton/d digester tank. All the tests were done at ambient temperatures in a 11.5-in.-ID tank.

3.2.1 Scouting Tests

The scouting test data from the tall-tank experiments are summarized in Appendix A. All the scouting tests used water with ~5-g/L, 1190- to 4750-μm-diam stainless steel solids. Some of the tests also added ~120 g of sheared spacer wires. All the tests used a 2.5-in.-ID plastic lift tube with a 1-in. Sch 40 central ejector suction line extended ~0.47 cm beyond the end of the lift tube. Three external 0.375-in. Sch 40 air-supply pipes with the outlet designs shown in Fig. 2.15 were studied. The scouting tests determined the most efficient air outlet design for the supply pipes, tested the plug removal ability of the agitator, investigated start-up problems, and determined intermittent air flow cycle times.

The initial tests were run using the air outlet design shown in Figs. 2.15a and 2.16a. The results from these tests are summarized in Appendix A. This simple air outlet tube did not provide sufficiently directed air flow to reliably suspend the large stainless steel solids.

The second series of tests used the air outlet design shown in Figs. 2.15b and 2.16b. This design provided a more directed, higher-velocity air stream and improved the reliability. Optimal performance was achieved with the air lines extended 0.635 cm below the end of the lift tube, a lift tube/tank bottom minimum separation of 1.45 cm, and an intermittent air-feed cycle of 10 s on and 4 s off. Longer air flow off-time also performed well in

start-up experiments but allowed the large solids to settle to the bottom of the tank between air flow on periods.

In an effort to better direct the air flow from the air-supply line, the design shown in Figs. 2.15c and 2.16c was tested. This design provided rapid start-up of solids recirculation and maintained the suspension. However, some solids were trapped beneath the suction line due to the initial air flow pattern shown schematically in Fig. 3.8. When the air-supply outlets were directed slightly off center, a swirling motion was produced in the bottom of the tank, and the quantity of solids trapped beneath the suction line was reduced, but because of the fan spray produced by this air outlet design, some solids were now trapped at the sides of the tank.

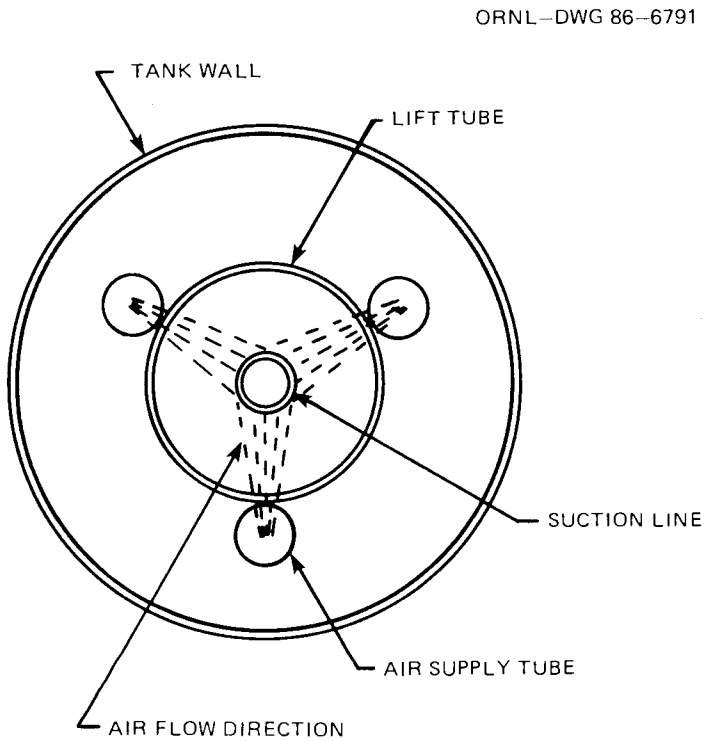

Fig. 3.8. Schematic representation of air flow pattern/direction from air-supply tube outlet design c in

To further define and direct the air stream from the air-supply lines, the design shown in Figs. 2.15d and 2.16d was tested. This design provided the most vigorous agitation of all the air supply outlets tested thus far. The air-supply tube outlets were directed ~5° off-center to provide a swirling motion in the bottom of the tank (Fig. 3.9). This swirling motion maintained all the solids on the bottom of the tank in constant movement prior to being transported up the lift tube. No problems were encountered in starting solids recirculation from a settled bed of solids, but some of the large stainless steel solids were trapped between the air-supply line and tank wall. Plug removal tests were also conducted in which 120 g of spacer wires were added to the tank and the lift tube was deliberately blocked by the combination of wires and large stainless steel particles. The lift tube was blocked by stopping the air flow during start-up at a point such that the slug of solids being lifted was

ORNL–PHOTO 4514–82

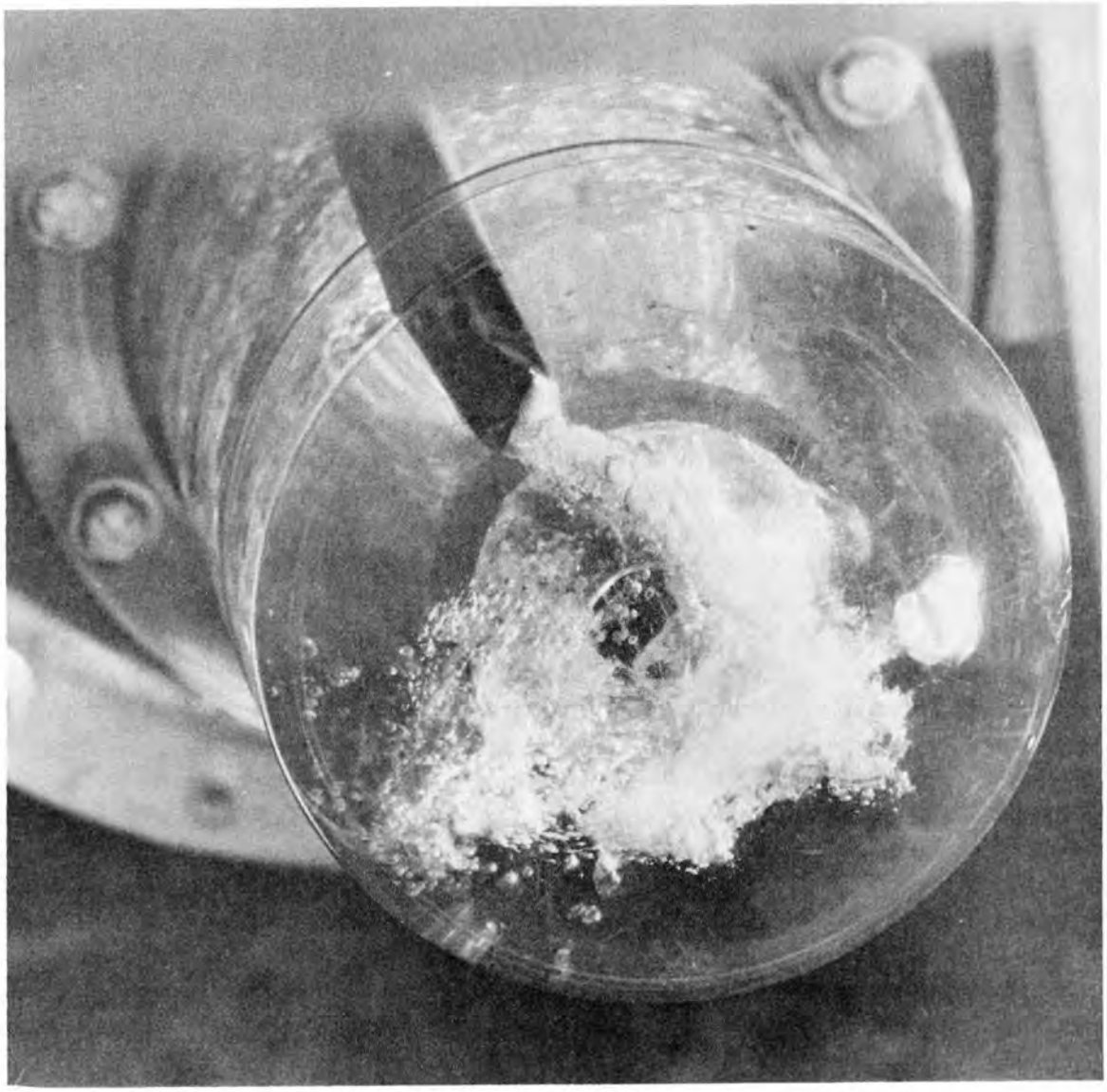

Fig. 3.9. View of tank bottom depicting off-center air-supply stream direction.

allowed to fall back down the lift tube on top of any solids not yet swept from the bottom of the tank. However, it was not possible to block the lift tube with less than ~100 g of wires added to the large stainless steel fragments. Once the lift tube was blocked, the time required for the operation of the air lift to remove the plug and resume normal solids recirculation varied from ~13 min to 15 s.

The air-supply-line outlets were modified once more to minimize the potential for solids to be trapped between the ends of the air-supply tubes and tank wall. This design, shown in Fig. 2.15e, was extensively tested both with and without wires in the tank. The performance of this design was similar to the previous one at removing plugs in the lift tube. However, at higher air flows in the range of 84 to 106 L/min, the agitator removed plugs from the lift tube in less than 2 min. Start-up of solids recirculation was rapid with

little difference in the times required to begin at air flows ranging from 62.4 to 105.8 L/min.

Tests were also conducted using the central 1-in. Sch 40 suction lines as a solitary air supply for the lift tube in the tall tank. In all the runs with this agitator, there was a stagnant zone directly beneath the end of the air-supply pipe. This stagnant zone did not occur with the three-air-supply agitator. The central air-supply agitation was able to remove blockages from the lift tube within ~3 s of operation at air flows ranging from ~19 to 106 L/min and was, therefore, more efficient at blockage removal than the three-air-supply agitator.

3.2.2 Solids Suspension Studies

As in the short-tank tests, three tube bundles with four lines each were used to withdraw 12 samples for analysis in each test. The approximate location of each sample point in the tall digester tank is shown in Fig. 3.10. The data from the tall digester tank tests are summarized in Appendix C. The data summary for the tall-tank tests consists of the same items as described in the short-tank solids suspension studies in Sect. 3.1.2. Table 3.4 gives a summary description of the experiments run with the tall digester tank. All the solids suspension tests used tungsten solids (<88 μm diam) at a concentration of ~20 g/L. In most of the experiments, water was used as the test solution with only 28 tests using calcium nitrate solution. All the tests used an intermittent air feed with a 10-s on-time followed usually by a 4-s off-time. The solids suspension performance of the three-air-supply agitator on the tall digester tank was studied relative to lift tube separation from the tank bottom, air-supply-line orientation and design, lift tube design, liquid level and specific gravity, and air flow rate.

3.2.2.1 Plastic lift tube studies

The first few solids suspension runs in the tall tank were made with the air-supply lines not optimally oriented to give the most efficient swirling motion in the tank bottom. Air flows from 35 to 116 L/min were used at off-the-bottom separations for the lift tube of 1.45 and 2.05 cm. The solids suspension level varied from ~70% to 90%, depending largely on the air flow rate. The initial tests also examined two values for the extension of the ends of the air-supply lines below the end of the lift tube. The effect of changes in this extension on solids suspension efficiency appeared to be dependent on the minimum separation between the lift tube and tank bottom. Figure 3.11 shows the effect of varying the extension of the air outlets below the end of the 3-in.-OD (2.5-in.-ID) plastic lift tube on solids suspension levels with the air lines positioned to give optimal swirling motion in the bottom of the tank and the lift tube-tank bottom separation at 2.94 cm. The solids suspension levels appeared to be insensitive to changes in air flow rates above ~60 L/min at all the air-line extensions tested. Although the data in Fig. 3.11 would suggest a maximum at air flows between 60 and 120 L/min, experiments at slightly different conditions in this air flow range did not support this conclusion. Also, at the low air flow rates, solids suspension levels at larger air-line extensions were less sensitive to changes in air flow rates. Generally, this indicates that, even though larger air-line extensions are preferred at

ORNL–DWG 86–6792

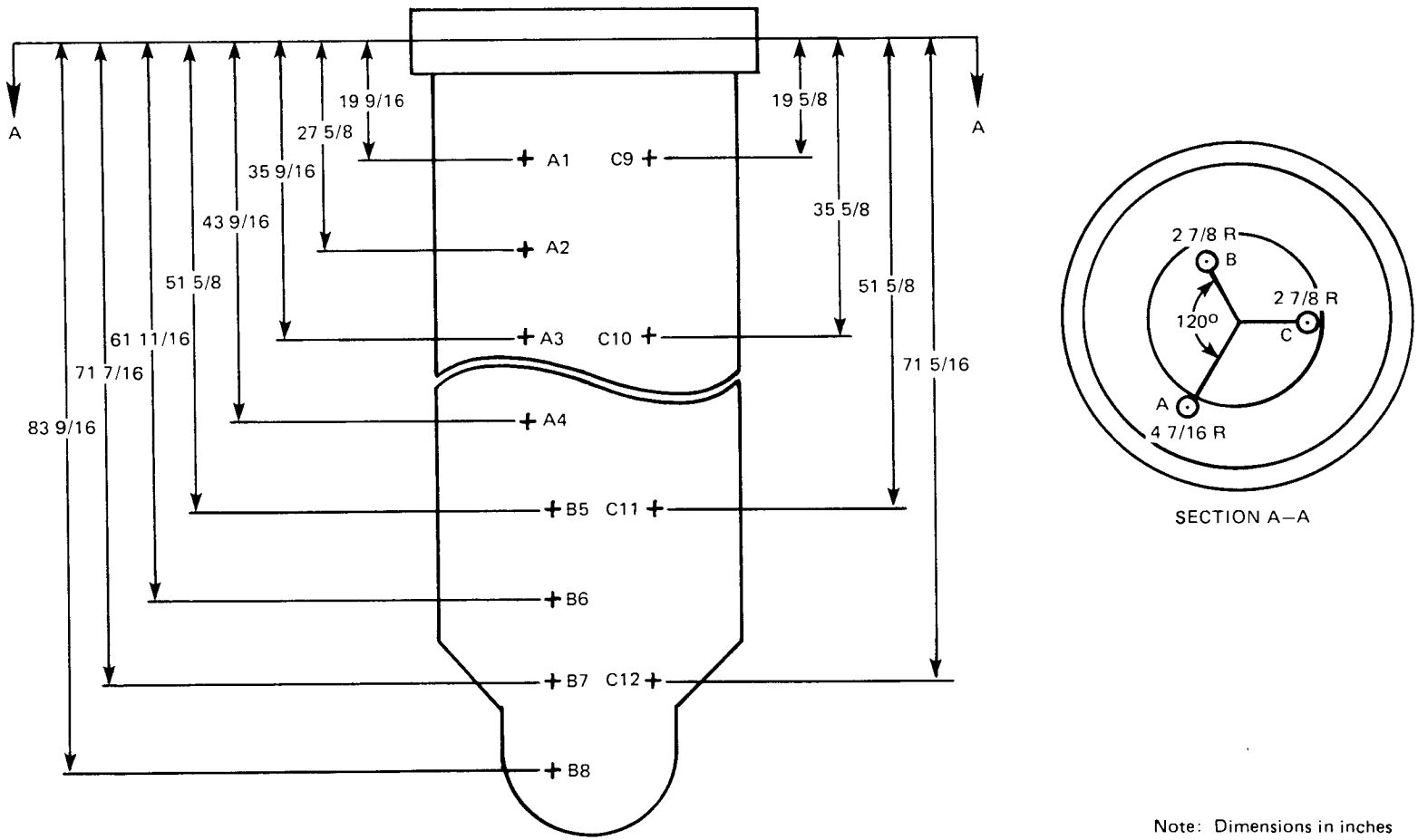

Note: Dimensions in inches

Fig. 3.10. Approximate locations of tall-tank sample points.

Table 3.4. Summary description of the equipment studied in the experiments with the tall digester tank

Run No.	Equipment description
400–443	Tall-tank tests with three-air-supply tubes with 0.0625-in. air outlets, 3 in.-OD plastic lift tubes, and 1-in. suction line. Varying elevation, cycle times, air flow, air line orientation, and liquid level
444–459	Same as 400–443, except used slotted air supply tubes
460–558	Same as 400–443, except used 0.75-in. suction line in center of lift tube
559–604	Same as 460–558, except used 2-in. Sch 40 stainless steel pipe for lift tube
605–616	Same as 460–558
617–644	Same as 559–604, with screen over end of suction line

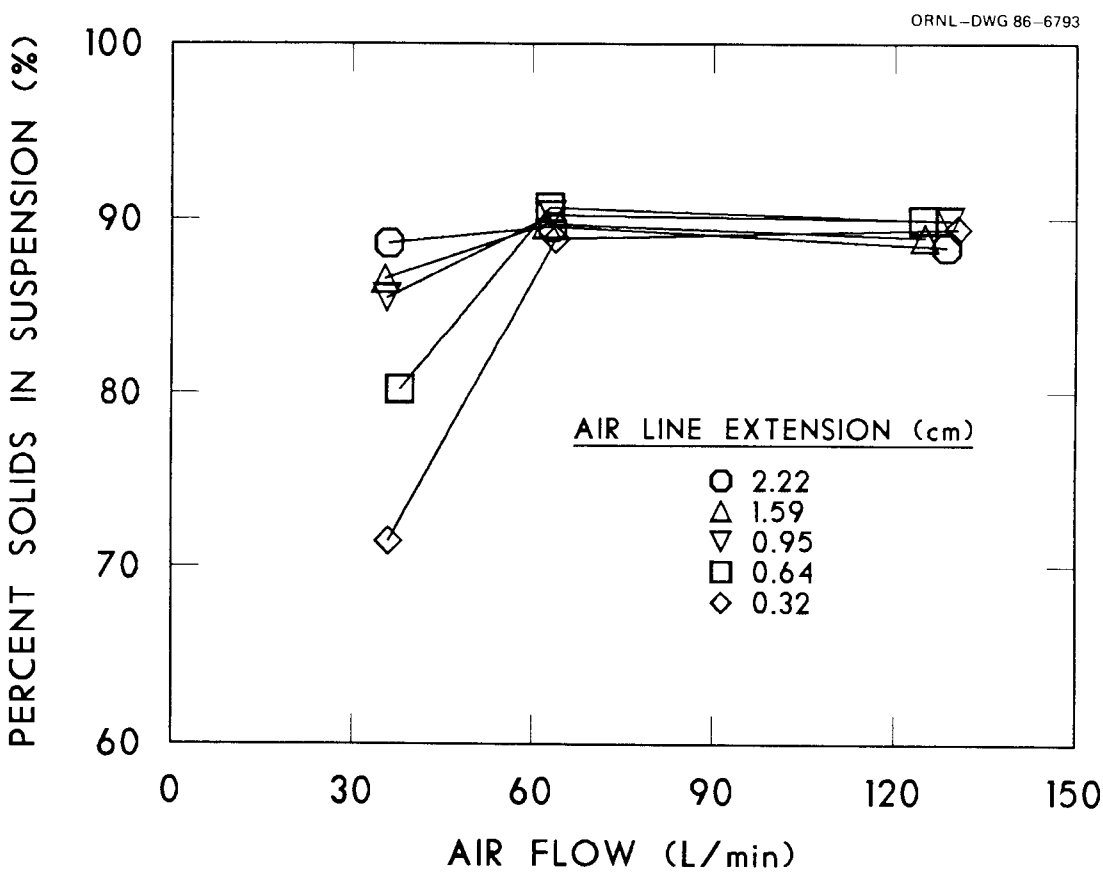

Fig. 3.11. Variation of percent solids in suspension with air line extension and air flow using 2.5-in.-ID lift tube with a lift tube tank bottom separation of 2.94 cm.

low air flow rates, in the region of highest solids suspension levels, the air-line extension is not important. The variation of percent solids in suspension with lift-tube tank bottom separation at constant air flow and air-line extension is shown in Fig. 3.12. Even though the suspension-level variations are slight, the data suggest a decrease in performance at separations greater than 2 cm. Based on percent variation values, the uniformity of the solids suspension did not appear strongly dependent on either air-line extension or air flow rate. Percent variation values for the data in Figs. 3.11 and 3.12 were typically around 4% or 5%, but ranged from 2.3% to 9.74% and 4.32% to 7.05%, respectively.

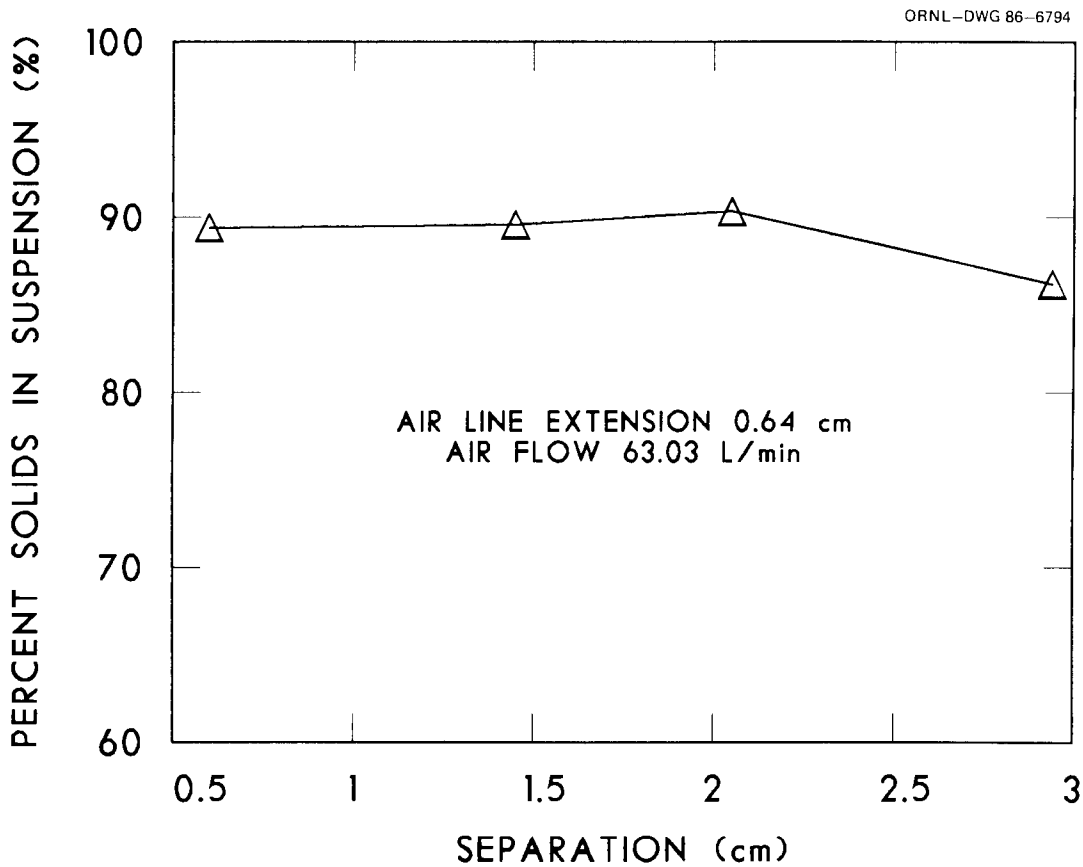

Fig. 3.12. Variation of percent solids in suspension with lift tube/tank bottom separation using the 2.5-in. ID lift tube.

The digester tanks require constant agitation, both during filling and afterward. Several tests were done to simulate the case where the tank is being filled to determine the effect of varying the liquid level on the solids suspension ability of the agitator. The results of the liquid level variation tests are shown in Fig. 3.13. These tests were done by successively adding 20-L increments of water with 20-g/L tungsten solids to the tank for volumes ranging from 20 to ~99 L. Air lift at the low liquid levels (<~111 cm) was not possible. At the low liquid level, the recirculator acted primarily as a sparger. However, if large quantities of tramp materials such as spacer wires (>100 g) and hull fragments (~500 g) are present, then blockage of the lift tube is possible as the tank is being filled

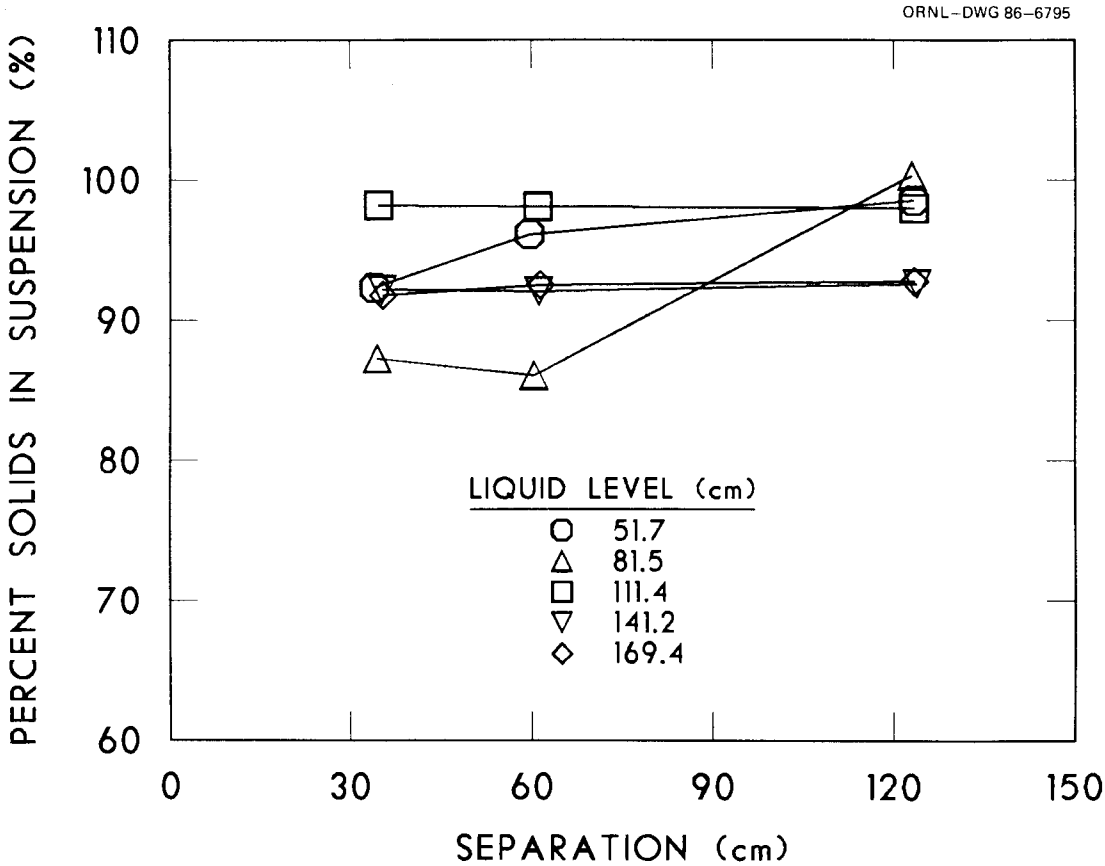

Fig. 3.13. Variation of solids suspension level with air flow rate and liquid level.

because the large solids may be pushed into the lift tube by the air sparge. No problems were noted in the tests using tungsten powder. At the lower liquid levels, <~111 cm, the uniformity of the solids suspension varied widely, with percent variation values ranging from 0.47% to 8.88%. At the two highest liquid levels, the percent variation values were more consistent, ranging from 0.98% to 3.25% with an average of ~2.4%. The solids suspension ability of the agitator was acceptable over the entire range of liquid levels studied (51.7 to 169.4 cm).

All the experiments discussed thus far were done using the air-supply-tube design shown in Fig. 2.15e. Some solids suspension tests were also done using the air-supply-tube design shown in Figs. 2.15c and 2.16c. This design provided reasonably good solids suspension, ~87%, but allowed part of the air feed to flow up the outside of the lift tube when the air-line outlets were adjusted for the most efficient operation whereby most, but not all, of the solids were kept off the bottom of the tank. This type operation was not acceptable because of interference with level/density readings from the air bypassing the lift tube, inefficient recirculation, and the presence of sediment on the bottom of the tank.

3.2.2.2 Stainless steel lift tube studies

The 2-in. Sch 40 stainless steel lift tube was built and tested to determine the performance of a prototypic recirculator built from standard materials. This design, shown in

Fig. 2.14, allowed more precise alignment of the three-air-supply tubes and more uniform distribution of air than was possible with the 2.5-in.-ID plastic lift tube design. The variables studied with the stainless steel lift tube included air outlet stream direction, solution specific gravity, air-flow rate, air-line extension, and lift-tube diameter.

The air stream direction must be such that the bottom of the tank is continuously swept clear of settled solids while also preventing the air from bypassing the lift tube in order to minimize the interference with the level/density instrument readings. The air stream direction is defined by the angle, α, as shown in Fig. 3.14. The results from the study of three different air stream directions are shown in Fig. 3.15. With the 72° air stream direction, some of the air bypassed the lift tube and was, therefore, not an acceptable orientation even though the solids suspension tests gave favorable results. All three air stream directions produced reasonable solids suspension levels with tungsten solids; however, in tests with large stainless steel particles (1190- to 595-μm diam), the 51° orientation appeared to provide the most efficient agitation in the bottom of the tank and, therefore, better solids suspension. The overall uniformity of the solids suspension was best at the 51° orientation, with percent variation values ranging from 4.87% to 10.59%. The range of percent variation values for the 71° and 30° runs was 2.36% to 14.57% and 9.28% to 13.85%, respectively. With the 51° orientation, the air stream was about tangential to the outside diameter of the lift tube.

The terminal settling velocity of a particle in a fluid is directly proportional to the square root of the difference between the solution density and particle density. Therefore,

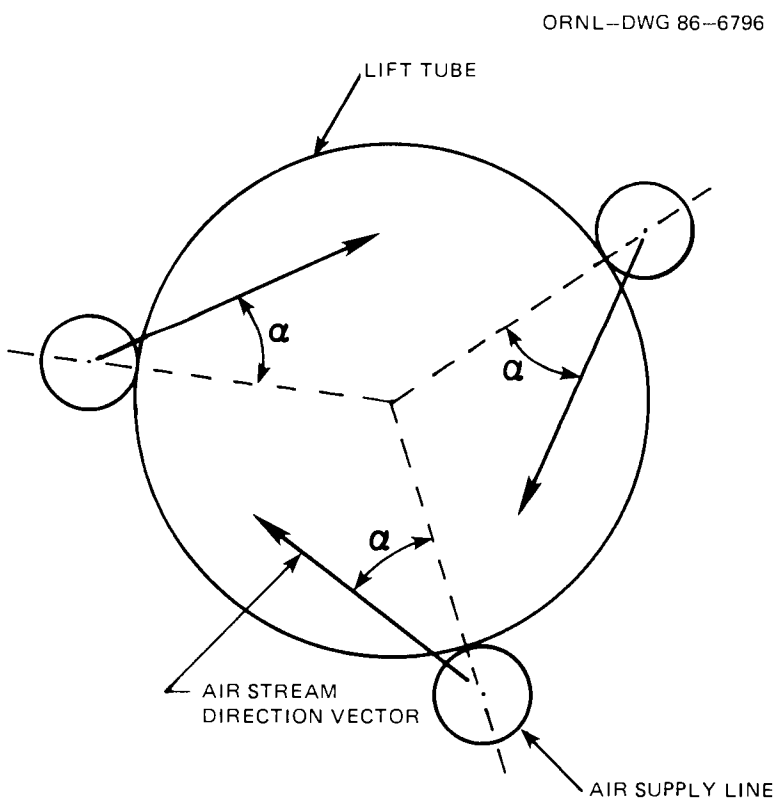

Fig. 3.14. Schematic representation of air stream direction angle, α.

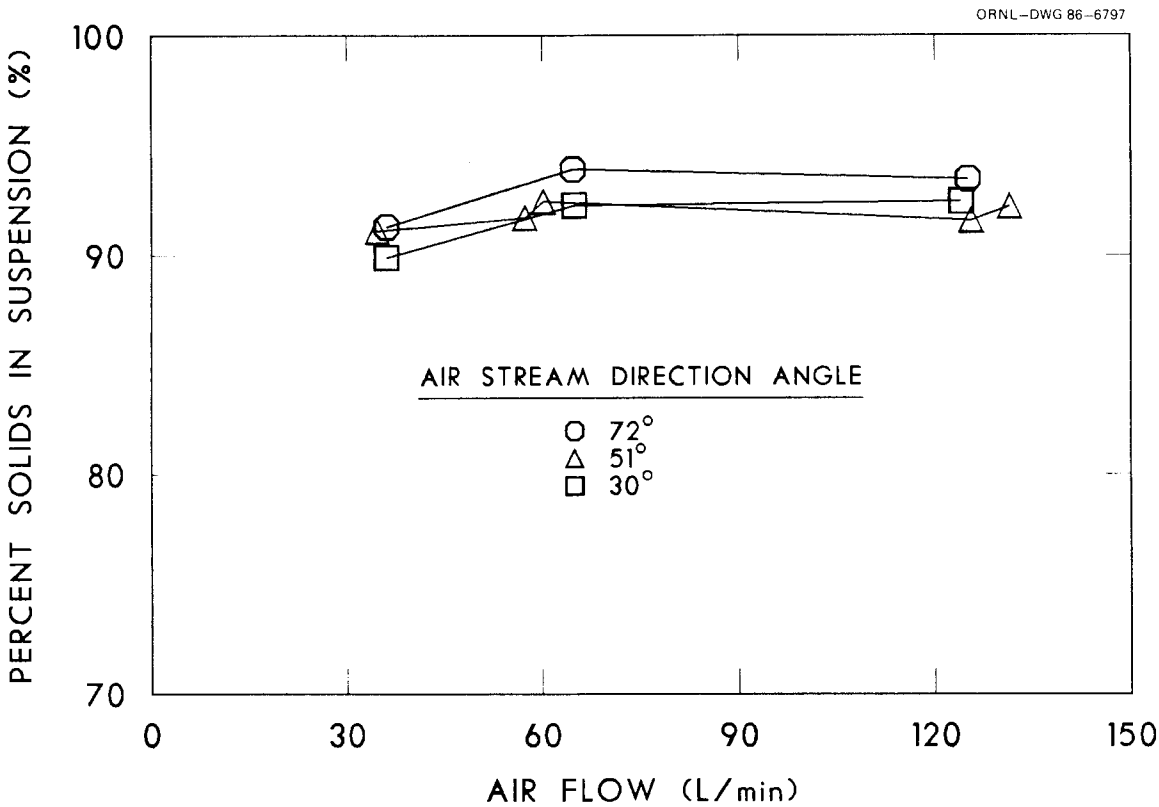

Fig. 3.15. Variation of solids suspension level with air flow and air stream direction for the stainless steel lift tube.

higher-density solutions exhibit lower settling velocities for a given particle, which implies that particles placed in suspension will remain there longer in higher-density solutions. When particles remain in suspension longer, the energy imparted to the solution by an agitator can be used to suspend those particles that have not yet been suspended, with a net effect of placing more solids in suspension. This effect is illustrated by the results shown in Fig. 3.16, where the solids suspension performance of the stainless steel lift tube agitator was studied using solutions with specific gravities of 1.0, 1.37, and 1.4. The uniformity of the solids suspensions for the runs described in Fig. 3.16 was greater with the higher specific gravity solutions, as indicated by the typically lower percent variation values. Percent variation values ranged from 8.27% to 14.79% for the 1.0 specific gravity runs and 2.7% to 6.54% for the 1.4 specific gravity runs.

A comparison of the solids suspension performance of the 2-in. Sch 40 stainless steel lift tube and 2.5-in.-ID plastic lift tube is shown in Fig. 3.17. Both lift tubes performed about the same, except that the stainless steel lift tube was somewhat easier to block with solids requiring only 90-g wires and 5 g/L of 595- to 1190-μm-diam particles. The stainless steel lift tube was easier to plug, probably because the clearance between the suction line and the inside wall of the lift tube was less than for the plastic lift tube. As shown in Figs. 3.11 and 3.18, the solids suspension performance of the stainless steel lift tube was also less sensitive to variations in air-line extension than the plastic lift tube. The

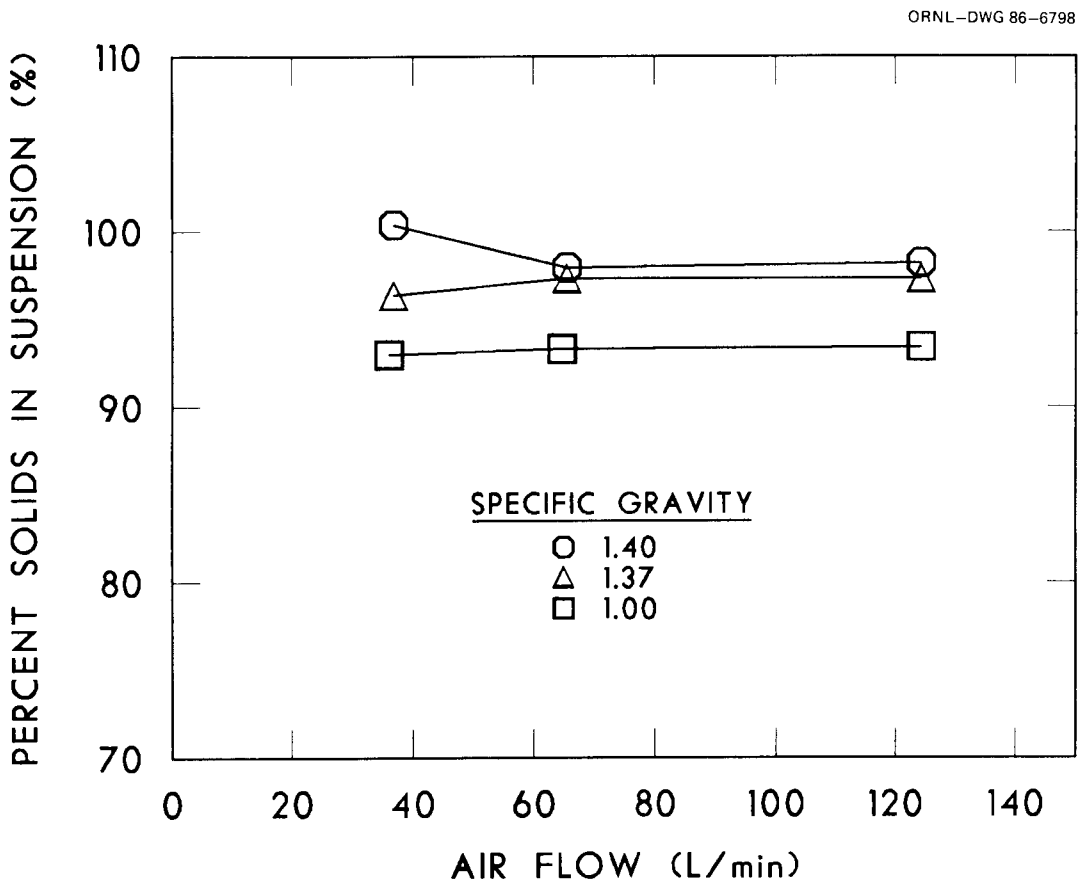

Fig. 3.16. Variation of percent solids in suspension with air flow and solution specific gravity.

uniformity of the solids suspensions produced by the two lift tubes was about the same for the runs described in Fig. 3.17. Changing the air-line extension and air flow rate had little effect on percent variation values, which ranged around 10% for the data in Fig. 3.18.

Because spacer wires may be present in the feed solution, there was concern that the wires could become lodged in the steam jet when the solution was transferred from the tank. Several unsuccessful attempts were made to transfer spacer wires from the tank, through the 0.75-in. steam jet. Even though neither the jet nor the suction line was blocked in any of the transfer tests, a screen was placed on the end of the suction line to prevent this possibility. The solids suspension performance with a 0.0625-in. mesh and 0.125-in. mesh screen over the end of the suction line was decreased only slightly from that without a screen, as illustrated in Fig. 3.19.. This decrease in solids suspension performance was considered to be acceptable. The uniformity of the solids suspensions produced using the 0.0625-in. mesh screen was about the same as that without a screen. The uniformity of the suspension with the 0.125-in. screen was slightly better than without a screen. Percent variation values without a screen and with the 0.125-in. screen ranged from 8.75% to 10.59% and 1.85% to 3.06%, respectively, as the air flow was increased from ~35 to 91.6 L/min for the 0.125-in. screen data and to 125.6 L/min for no screen data.

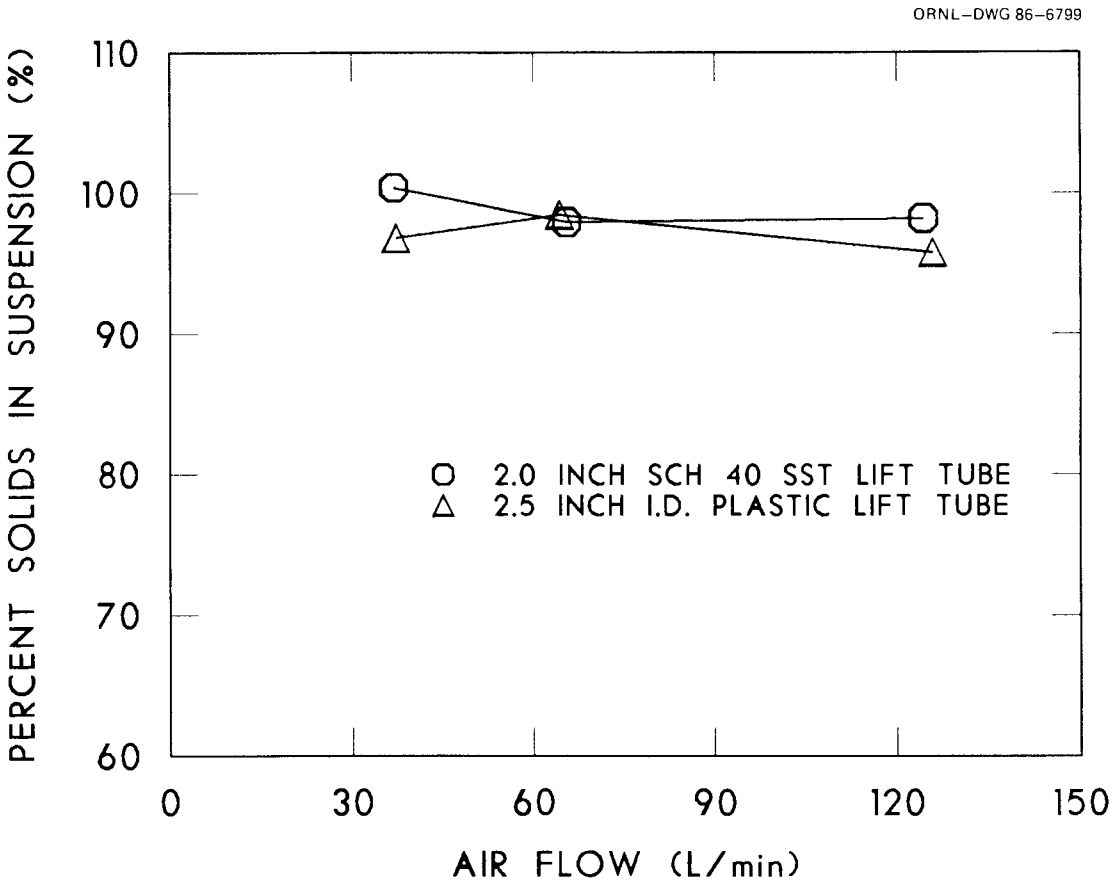

Fig. 3.17. Comparative performance of the stainless steel and plastic lift-tube agitators in the tall digester tank.

3.2.2.3 Summary of the tall-tank solids suspension test results

The results from testing of the solids suspension performance of the three-air-supply lift tube agitator in the tall digester tank are summarized as follows:

1. The preferred air tube outlet design is that shown in Fig. 2.15e, with the air stream from each supply line directed no more off-center than tangential to the outside diameter of the lift tube.
2. An average air flow of ~65 L/min over a delivery cycle of 10 s on and 4 s off is satisfactory.
3. The air-supply lines should extend ~0.95 cm beyond the end of the lift tube.
4. A minimum separation between the lift tube and tank bottom of ~2 cm is preferred. The variation in solids suspension performance with separation is slight.
5. The overall solids suspension performance level of the tall tank was somewhat less than that in the short-tank.

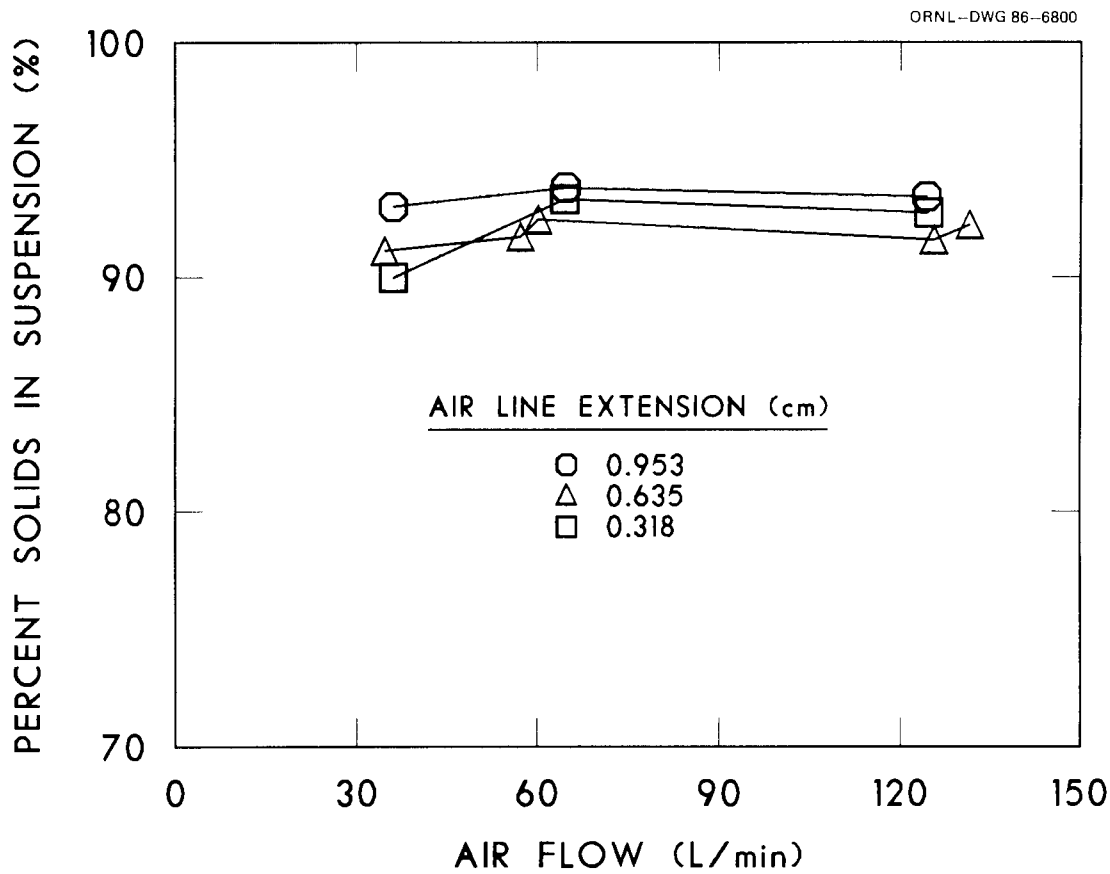

Fig. 3.18. Variation of percent solids in suspension with air flow rate and air line extension using the 2-in. Sch 40 stainless steel lift tube.

6. The solids suspension ability of the three-air-supply agitator in the tall tank with tungsten solids was not significantly decreased when the liquid level was varied from ~52 to 169 cm. However, tramp materials such as spacer wires and hull fragments present potential lift-tube blockage problems and should therefore be removed from the feed stream before entering the digester.

7. Use of a screen over the end of the steam jet suction line did not significantly degrade the solids suspension performance of the agitator.

8. Higher-density solutions gave higher levels of solids suspension by virtue of lower particle settling velocities.

9. Both the 2.5-in.-ID plastic lift tube and the 2-in. Sch 40 stainless steel lift tube performed about the same in the suspension of tungsten particles. The stainless steel tube was slightly easier to block with tramp materials because of the reduced area in the annular space between the central suction line and the inside of the lift tube.

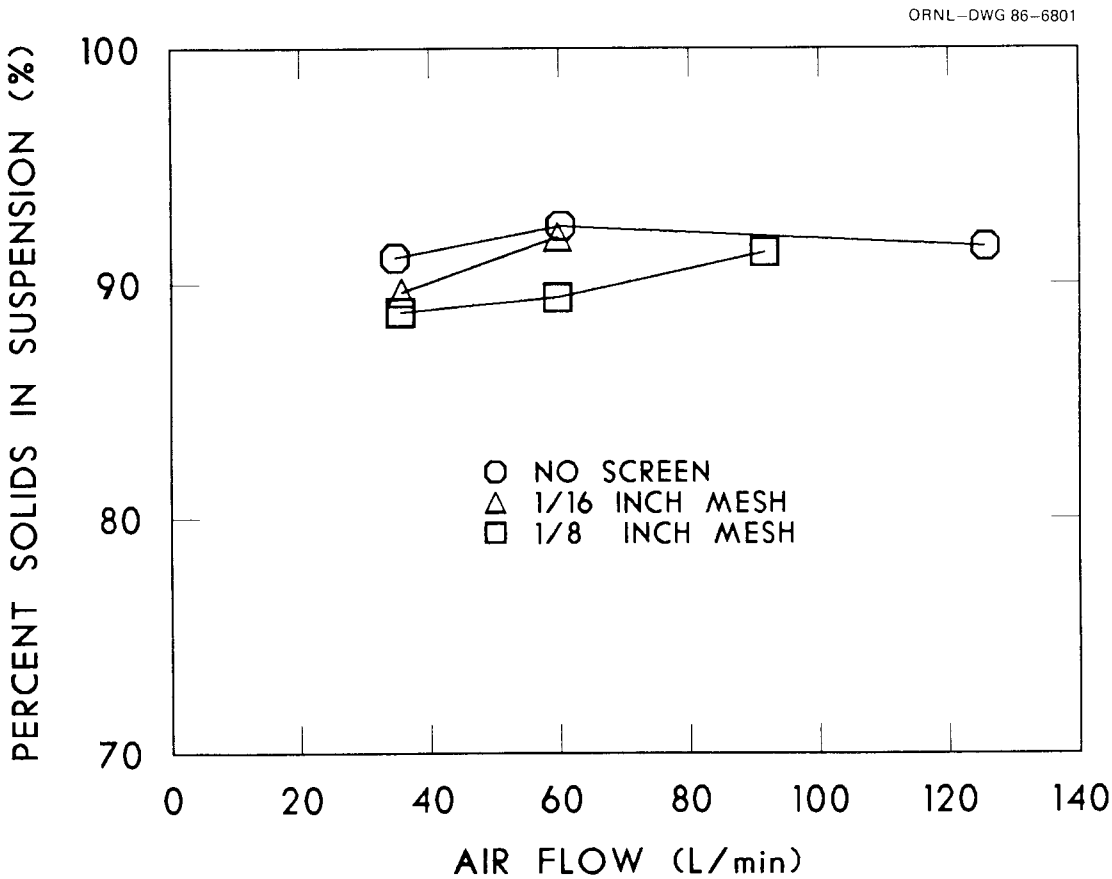

Fig. 3.19. Variation of percent solids in suspension with air flow and use of a screen over the end of the jet suction line.

3.2.3 Fluid/Solid Transfer Studies

Tests were conducted to evaluate the transfer efficiency and dilution levels using a Penberthy model GH-3/4 steam jet. The steam line to the jet was uninsulated for a span of ~30 ft to simulate in-cell conditions. A steam trap was located ~50 ft from the jet.

The initial tests were conducted using water at ambient temperature with no solids in the tank. The percent dilution was calculated from the beginning and final weight difference for the solution being transferred. The steam jet would not pump at steam flows <~45 kg/h. The results from these tests are shown in Table 3.5. In runs 1 and 2, condensate was present in the steam supply line to the jet. Runs 3 and 4 were conducted in succession with very little time between runs for condensate to form in the supply line. Prior to run 6, the jet was operated for ~10 min without pumping to remove the condensate from the line. Run 6 produced the least amount of dilution of the initial runs. When transferring reasonably small quantities of solution with a steam jet, condensate in the supply lines can result in a significant increase in product dilution.

Several tests were conducted using tungsten powder (<80-μm diam) and assorted sizes of stainless steel particles in water to determine the solids transfer efficiency of the steam

Table 3.5. Dilution studies for water transfers

Run No.	Steam feed rate (kg/h)	Transfer rate (kg/min)	Dilution (%)	Comments
1	~90.0	7.2	17.5	Steam rate above calibration range
2	~90.0	7.5	21.7	Steam rate above calibration range
3	53.7	10.3	12.3	Ran immediately after run 2
4	69.2	7.1	12.8	Ran immediately after run 3
5	75.9	7.2	17.5	System was cold prior to run
6	87.6	8.3	10.4	Blew out steam line prior to run

jet as well as dilution. The results from these runs are summarized in Table 3.6. All the tests in Table 3.6, except run 8, were conducted using an intermittent air sparge rate of ~60 L/min. Run 8 required a continuous air flow of 112 L/min to maintain the solids in suspension. Lower air flows allowed a large quantity of the stainless steel solids to remain on the bottom of the tank, from which they were sucked into the jet suction line in sufficient concentrations to block the line. Run 5, which was the result of six consecutive transfers at the indicated conditions, had the lowest solids transfer efficiency and is probably more realistic of actual operation. Some problems were encountered with air lifting solution up the jet suction line prior to the transfers. This problem did not occur in each run, but when it did, it was compounded because of the orientation of the receiver tank at a lower elevation than the digester, causing syphoning. Because solution transfers are typically from a lower to a higher elevation, syphoning is not expected to be a problem. Air lifting through the jet suction line is also not expected to be a problem in actual practice because the relatively limited submergence of the suction line in the tank compared to typical transfer heads would inhibit the performance of the suction-line air lift.

Table 3.6. Solids transfer and dilution study results using water with various solids

Run No.	Solids description: Concentration (g/L)	Solids description: Type[a]	Solids description: Size range (μm)	Steam feed rate (kg/h)	Transfer rate (kg/min)	Dilution (%)	Solids transferred (%)
1	20	W	<80	87.6	10.5	9.4	99.30
2	20	W	<80	69.3	6.7	17.2	
3	20	S	74–297	75.9	6.0	20.7	
4	20	S	74–297	87.6	14.4	9.6	99.96
5	20	W	<80	87.6			98.90
6	20	S	297–595	87.6	15.5	9.4	99.88
7	20	S	297–595	87.6	13.8	10.6	99.86
8	20	S	595–1190	87.6	8.4	17.2	99.97

[a]W = tungsten, and S = stainless steel.

Several tests were conducted to study the effect of sheared spacer wires (~1 in. long by ~0.0625-in. diam) on the solids transfer ability of the steam jet. In each test, 10 to 16 wires were placed in the tank prior to the solution transfer. After the transfer, the number of wires remaining in the tank was determined. As many as seven wires transferred from the tank during a run, but after nine runs the steam jet appeared to be blocked and would not transfer any more solution. The steam jet and suction line were disassembled but no blockage was found. In any event, the presence of spacer wires or other large tramp materials is a potential problem for steam jet transfers.

To keep wires and other tramp materials from blocking the jet, a screen with ~0.0625-in. square openings was installed over the end of the suction line. The screen did not interfere with the transfer of the <80-μm-diam tungsten solids. Results similar to run 1 of Table 3.6 were obtained in an experiment with a transfer rate of 19.6 kg/min, an intermittent air sparge rate of 36.9 L/min, and a dilution level of 8%. Ten transfer tests were done using from 9 to 15 spacer wires with no wires transferring. The screen also made it more difficult to air lift up the suction line, requiring ~140-L/min air flow to accomplish. Two additional tests were run using calcium nitrate solutions. Dilution levels of 8.4% and 8.7% were obtained for transfer rates of 17.5 and 17.3 kg/min, respectively. The tungsten solids transfer efficiency was ~99.4%.

In an effort to ensure that medium-size insoluble fuel particles could be removed from the tank, a screen with 0.125-in. square openings was installed over the end of the suction line. Ten transfer tests were done using 14 to 17 pieces of wire in each test and water as the test solution. A typical dilution level for these tests was 10.4% with transfer rates from 14.3 to 20.3 kg/min. No wires were transferred in any of these tests. The minimum air flow to cause an air lift of solution up the suction line (~118 L/min) was less than with the 0.0625-in.-opening screen, apparently because of less resistance to flow with the coarser screen. Four additional solids transfer tests were done using stainless steel particles 595- to 1190-μm diam in water. Three 50-L batches with 200 g of solids and one 99-L batch with 589 g of solids were transferred. In the 50-L transfers, the solids transfer efficiency varied from 0.9% to 5.4% with a typical dilution level of 11.7%. In the 99-L transfer, the solids transfer efficiency was 22.1% with a dilution level of 10.8%. Efficient solids recirculation was not possible in the 50-L tests, which allowed the large solids to settle to the bottom of the tank and hinder the transfer of the smaller solids. However, in the full-tank test, efficient recirculation of solids was established, allowing the gradual removal of some of the solids as they were swept toward the suction line by the agitator.

One final transfer test was done using 600 g of the 595- to 1190-μm-diam stainless steel particles in water with a 0.25-in. square opening screen attached over the end of the suction line. The solids transfer efficiency of this test was 74.1%, which was significantly higher than with the other finer screens.

In summary, use of a screen over the end of the suction line provides a convenient means of preventing blockage of the steam jet and hindering air lift up the suction line. The screen does not appear to interfere with solution transfers or increase dilution levels. The opening size in the screen should be selected based on the minimum particle clearance for the jet under consideration. For the Penberthy GH-3/4 jet used here, the minimum particle clearance is 0.15 in. Using a screen with 0.125-in. openings would therefore not allow solids too large to pass through the jet, whereas, the screen with 0.25-in. openings

may do so. Dilution levels no less than 8% to 10% were possible in these tests. If condensate is allowed to collect in the steam line, then dilutions up to ~22% may be expected in small-volume transfers. These dilution levels are significantly higher than the previously expected 3% to 5%.

3.2.4 Level/Density Measurement Studies

In the level/density measurement studies, the effects of tank operation on level and density readings were determined for a variety of bubbler designs (Fig. 2.18) and operating conditions. The parameters for this study included air flow to the agitator, bubbler elevation, solution density, presence of solids, and solution height. The fluctuations in the readings are reported as a percent of full scale where the density range was 0.5 to 1.5 kg/L and level was 0 to 120 in. The percent fluctuation was the maximum obtained from the steady-state operation of the digester. A typical plot of the level/density readings, detailing the maximum fluctuation, is shown in Fig. 3.20. Level measurements were found to be relatively insensitive to the operation of the tank with maximum fluctuations typically <0.6% (0.72 in.). The fluctuations in level reading were usually indicative of the level change resulting from the intermittent air flow. This discussion will concentrate on density measurement fluctuations. Unless otherwise stated, the agitator air-supply tube design shown in Fig. 2.15e was used.

The initial tests were conducted using straight-wall 0.25-in. tubing for the bubbler tubes. The percent of full-scale fluctuation in the density readings tended to increase with air flow and decrease with bubbler tube elevation, as shown in Fig. 3.21. Use of the slotted

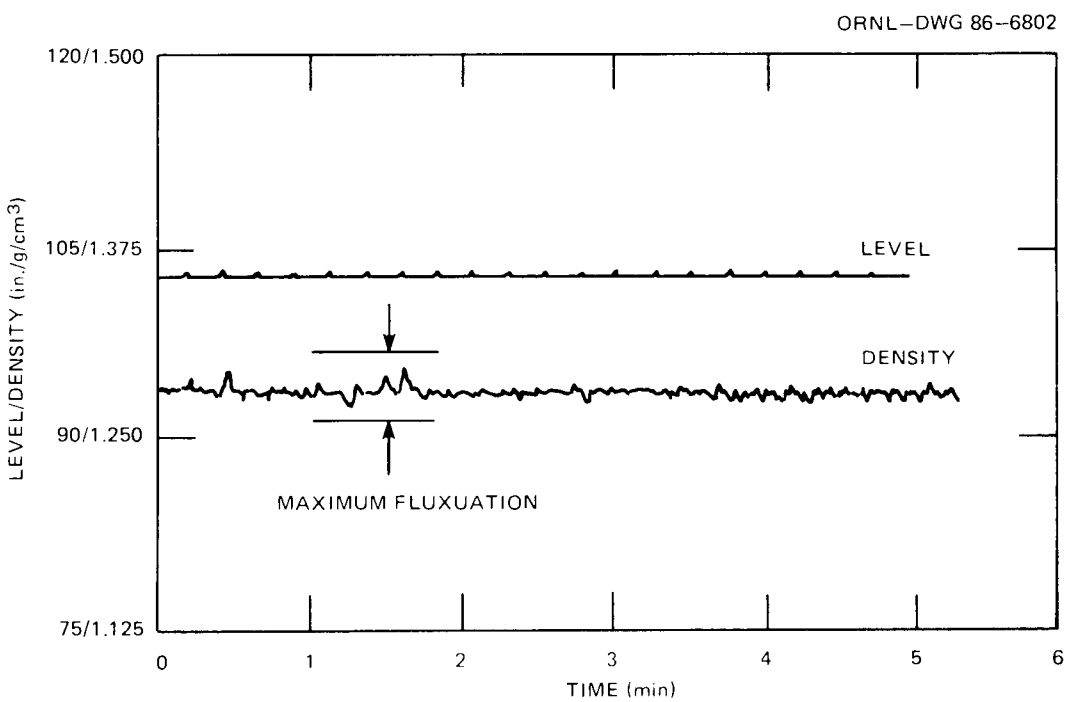

Fig. 3.20. Typical data plot for level/density readings showing the maximum density fluctuation.

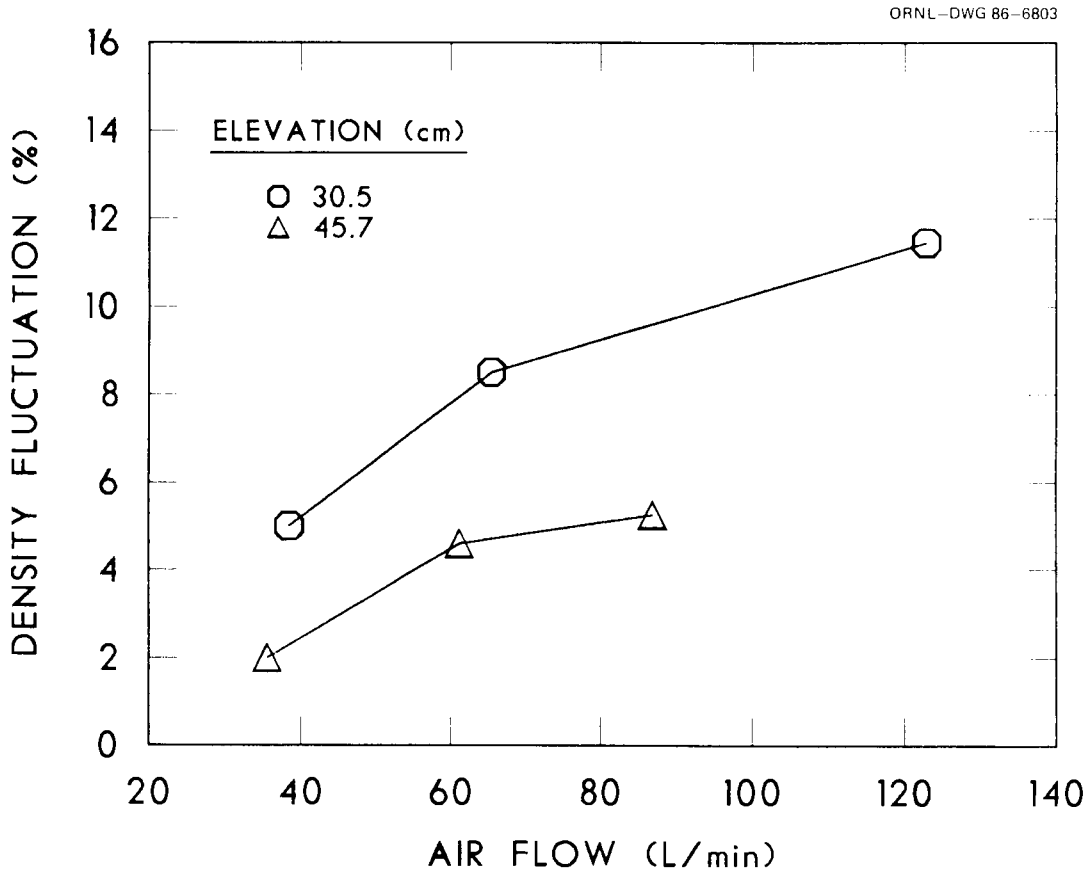

Fig. 3.21. Density readout fluctuation as a function of agitator air flow and bubbler elevation for the 0.25-in. tubing bubblers.

air-supply lines shown in Fig. 2.15c resulted in larger fluctuations in density than in the runs using the air lines with the 0.0625-in. holes in Fig. 2.15e. This comparison is shown in Fig. 3.22. Lowering the liquid level in the tank greatly increased the density fluctuation up to ~20% of full scale because of the cessation of the air lift resulting in a large amount of air bypassing the lift tube at low liquid levels. When air bypasses the lift tube, it can impact the ends of the bubbler tubes and deform the bubbles leaving the tube or prolong their stay, thus interfering with the differential pressure readings. Normally under conditions of small level/density reading fluctuations, the bubbles leaving the bubbler tubes are spherical, as shown in Fig. 3.23. For conditions with large level/density reading fluctuations, the bubbles leaving the bubbler tubes were irregularly shaped, as shown in Fig. 3.24. The irregularly shaped bubbles had a tendency to adhere to the ends of the bubbler tubes longer than the spherical bubbles, thus producing larger fluctuations in density readings.

The second type of bubbler tube studied, shown in Fig. 2.18b, was composed of 0.25-in. tubing with the bottom 2 in. bent ~45° from vertical. The air streams from the bubbler tubes were directed toward the inside wall of the tank. This design was expected to allow for more efficient release of bubbles from the ends of the bubbler tubes. Slotted air-supply lines were used to supply air to the agitator. The density fluctuations obtained

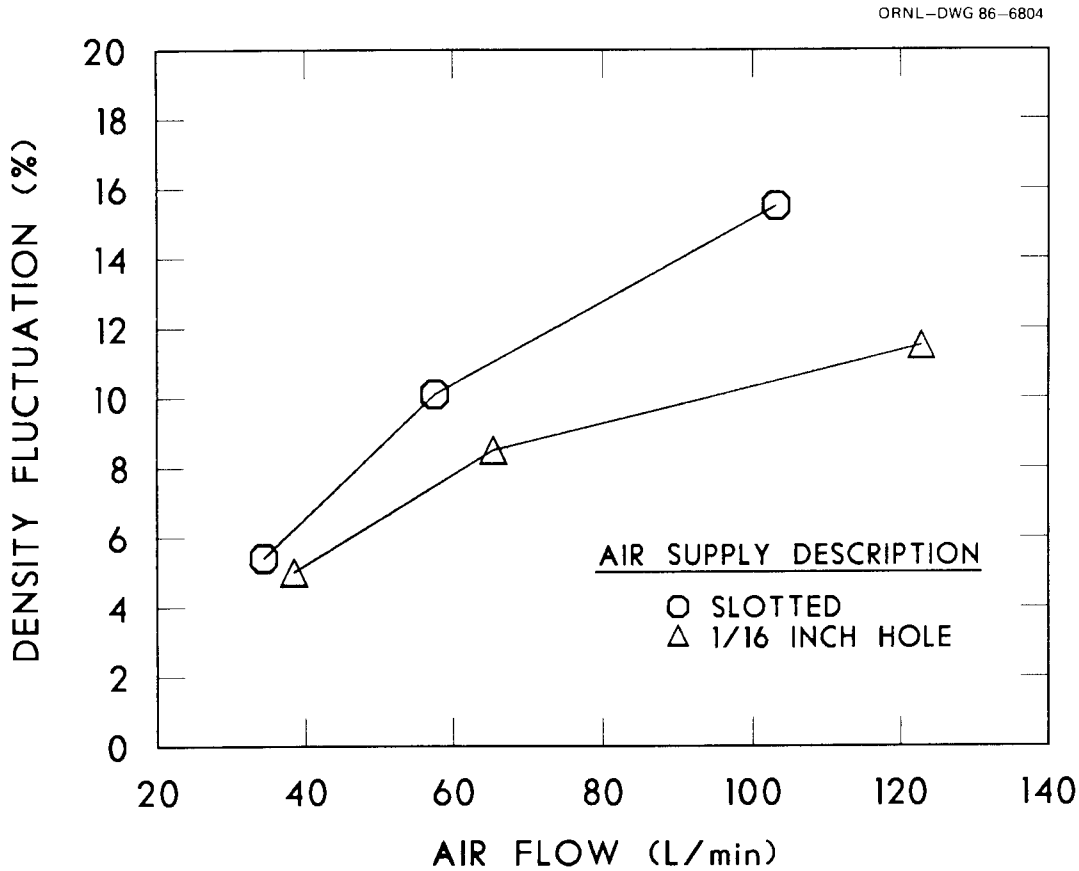

Fig. 3.22. Density readout fluctuation as a function of agitator air flow and design.

in these tests were similar to those in the tests with the straight tubing. Density fluctuations ranging from ~4% to 9% for a 45.7-cm elevation and 5% to 14% for a 30.5-cm elevation were obtained when the air flow was varied from ~34 to 101 L/min. Bending the bubbler tubes to 90° from vertical, as shown in Fig. 2.18c, resulted in a slight decrease in density readout fluctuation. At a 30.5-cm elevation, the density reading fluctuation ranged from 2.5% to 9.8% when the air flow was varied from 34.6 to 114.1 L/min. Bubble formation and releases from this probe design appeared to be less sensitive to the vertical fluid flow produced by the air lift recirculator.

The fourth type of bubbler tube, shown in Fig. 2.18d, was composed of 0.25-in. tubing with the bottom ~2 in. bent ~90° from vertical and then cut off ~0.25 in. from the vertical tube. The air flow from the tube was directed toward the inside wall of the tank. It was believed that this design would allow more streamlined flow around the end of the bubble tube. The effects of varying the fluid level on density readings using these tubes is shown in Fig. 3.25. These results are similar to those obtained in the straight bubbler tests in that the magnitudes of the density fluctuations increase with lower liquid levels and higher air flows. Once the tank attains liquid levels in the range of 140 to 170 cm, the density fluctuation dependence on air flow is not as significant. Variation of lift tube elevation and air-supply-line orientation did not have a significant effect on the density readouts.

ORNL–PHOTO 4516–82

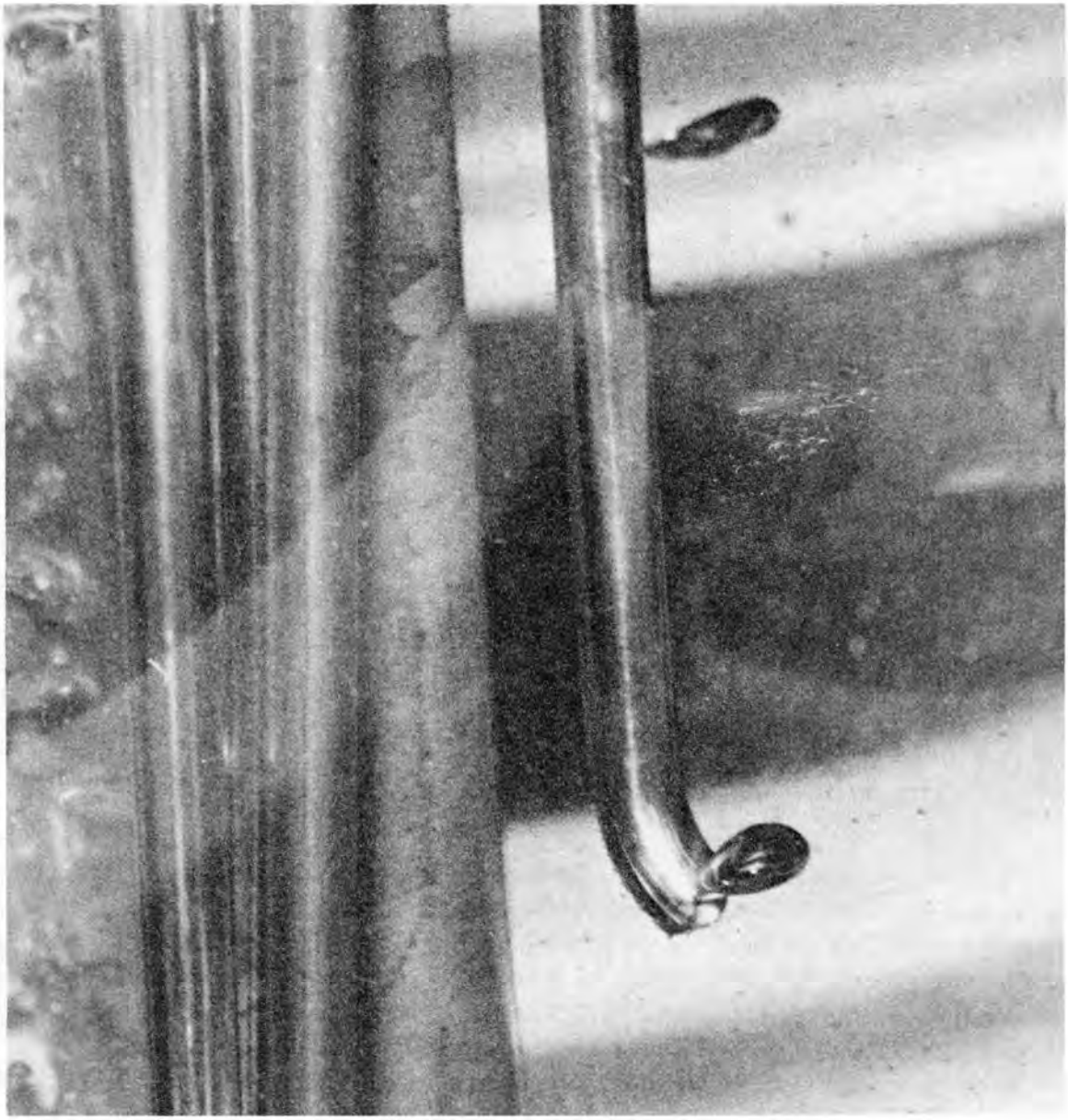

Fig. 3.23. Normally shaped bubbles from bubbler tube giving minimal fluctuations in readings.

The fifth type of bubbler tube, shown in Fig. 2.18d, was composed of 0.25-in. pipe with a single V-shaped notch cut in the wall facing the inside wall of the tank. The V-notch had a height equivalent to the outside diameter of the pipe and a width ~25% of the height. The notch was used to provide a defined path of least resistance for the air flow to exit the bubblers. This bubbler probe design was evaluated using calcium nitrate solution with a specific gravity of 1.374. Density readout fluctuations varied from ~2.1% to 5.0% as the air flow to the air lift was increased from 36.9 to 125.0 L/min. Variation of the probe elevation from 30.5 to 61.0 cm had little or no effect on the density readout fluctuations. Although the density readout fluctuation magnitudes for the 0.25-in. pipe runs

ORNL–PHOTO 4517–82

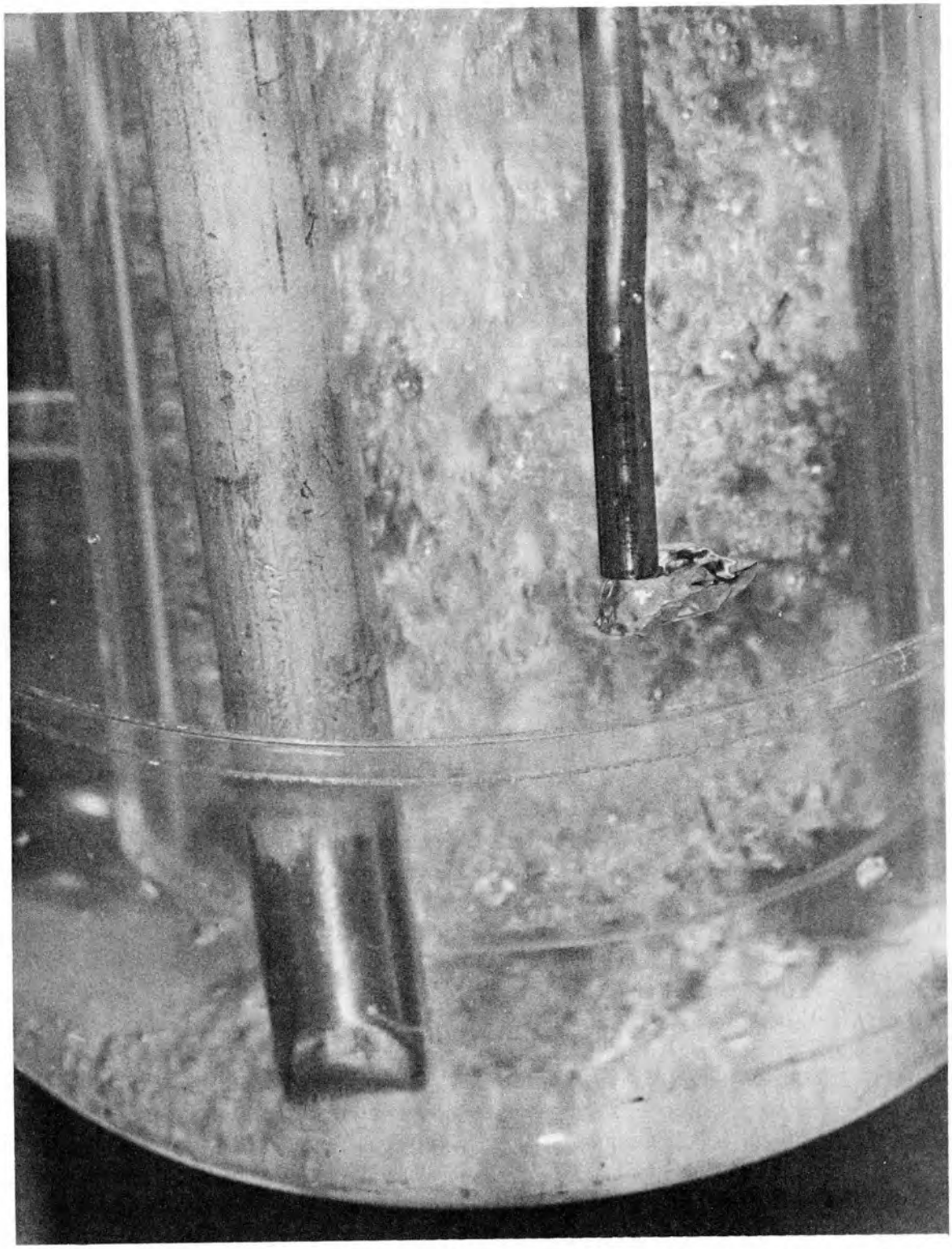

Fig. 3.24. Abnormally shaped bubbles from bubbler tube for conditions with large fluctuations in readouts.

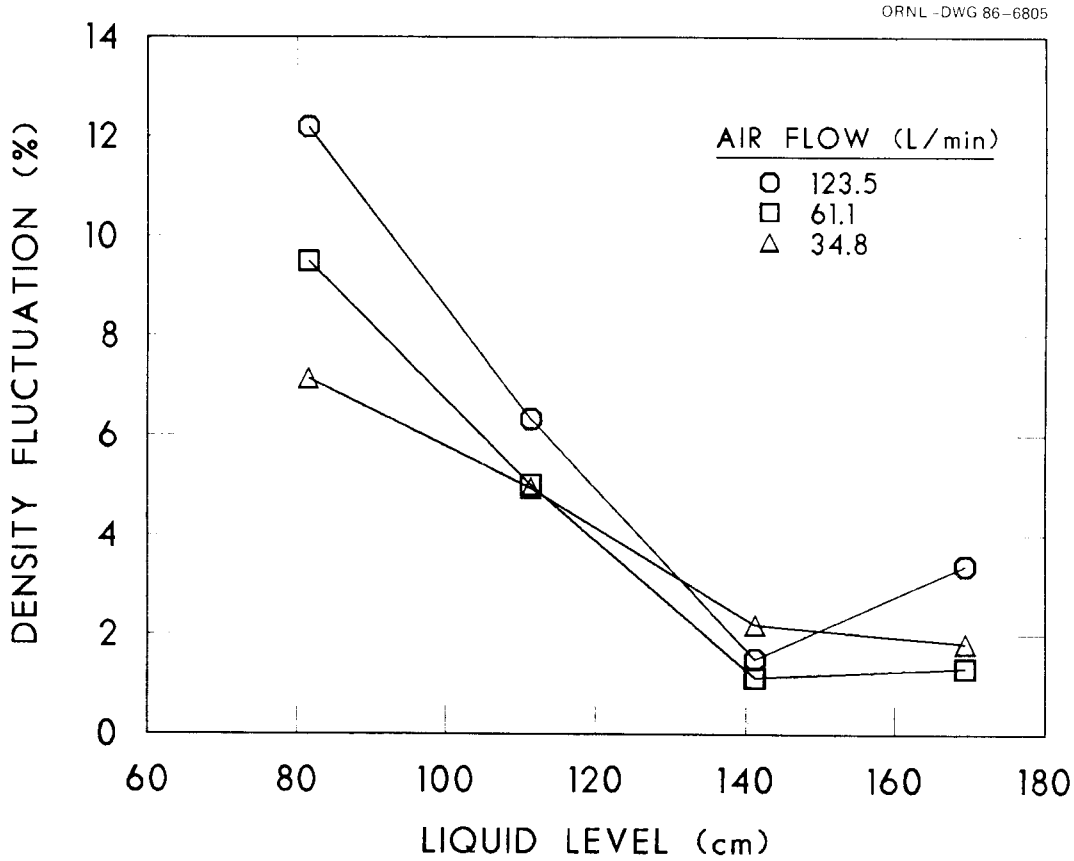

Fig. 3.25. Density readout fluctuation as a function of liquid level and agitator air flow.

were about the same as for the 0.25-in. tubing runs, the frequency of the fluctuations was much greater for the 0.25-in. pipe runs, probably because of the larger bubbles that formed and the large area of exposure to the recirculating fluid in the tank.

In an effort to minimize the area exposed to the recirculating fluid, the bubbler tube shown in Fig. 2.18f was used. This bubbler design was similar to the previous one in that the V-shaped notch was retained but about half the end was covered by a 45° inclined cap, and the notch was widened to 50% its height. Density readouts were similar to those obtained with the open-end pipe bubbler. Most of these tests were made using water as the process fluid, both with and without solids. The effects of varying the elevation of the lower density probe is shown in Fig. 3.26 both with and without solids in suspension. The solids used in these tests were tungsten particles <80-μm diam. For the lower bubbler tube elevations, the presence of solids increased the density readout fluctuation and, as in previous experiments, higher agitator air flows generally had the effect of increasing the fluctuation amplitude. At the higher bubbler-tube elevations, these effects were minimized. Larger-diameter stainless steel solids ranging in size from 297- to 595-μm to 0.0625-in. diam by 1-in.-long spacer wires also gave similar results.

The seventh and final type of bubbler tube tested was a simple 0.25-in. pipe, as shown in Fig. 2.15g. Density fluctuations in the range of 1% to 2.6% were obtained when the air flow to the agitator was varied from 35.4 to 91.6 L/min using 20-g/L tungsten particles in

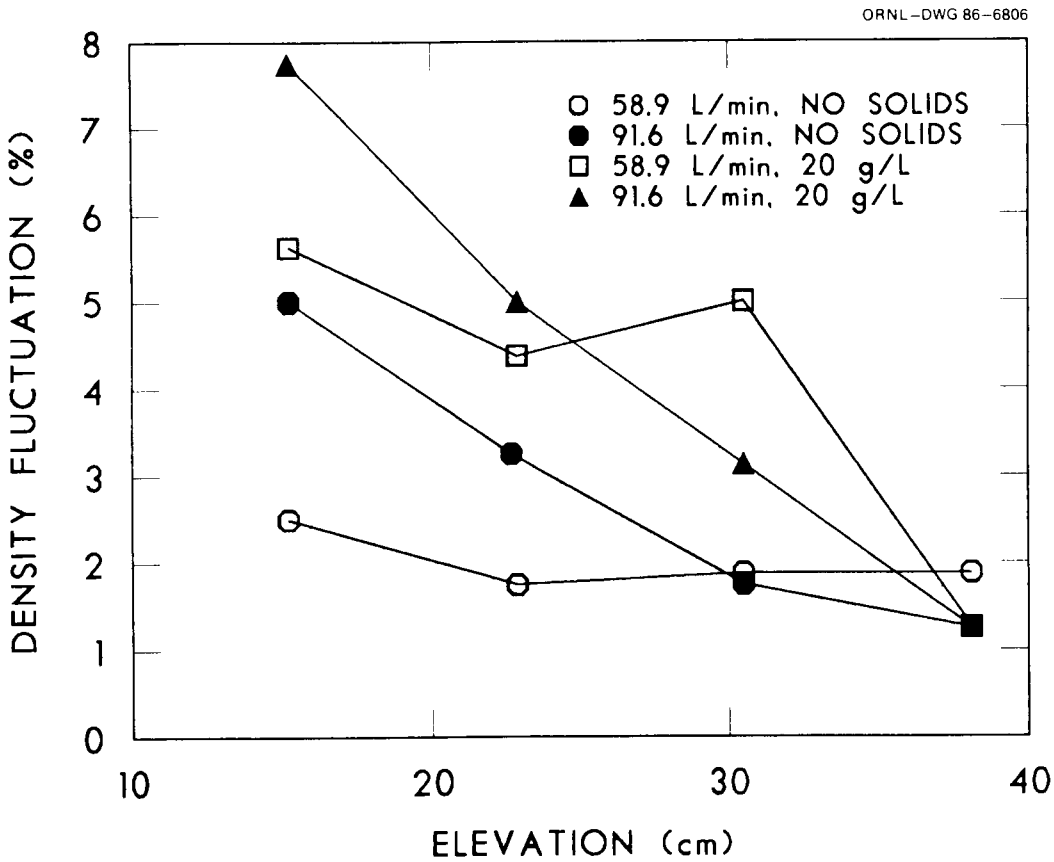

Fig. 3.26. Density readout variation as a function of bubbler elevations, air flow to the agitator, and solids content.

water. With calcium nitrate solution and an air flow of 60.4 L/min, the density fluctuation was ~3.5%. In general, the density fluctuations experienced with this bubbler-probe design were as low as those for any of the designs tested thus far.

4. SUMMARY AND CONCLUSIONS

The experimental results from the digester tank solids suspension studies have shown that the intermittent air-supply recirculator in combination with a modified pachuca tank is suitable for use in solids suspension applications. The modified pachuca tank design should have a critically safe solids collection and recirculation reservoir as the bottom of the tank. The reservoir should be ~6 in. in diameter and of a length sufficient to contain the anticipated amount of settled solids. The solids collection reservoir will be joined to a conic section with walls at an included angle of no more than 60°. Three equally spaced air-supply lines located around a central draft tube provided aggressive agitation not otherwise achievable with conventional air lifts. A minimum of three equally spaced overflow outlets should be located in the draft tube below the normal liquid level in the tank. Shorter tanks are preferred because they exhibit superior solids suspension ability as a result of the lower pumping heads for the air lift. The air-supply outlet design should be that shown in Fig. 2.15e, with the air stream directed no more off center than tangential to the outside diameter of the lift tube. An average air flow rate of ~65 L/min over a delivery cycle of 10 s on and 4 s off is satisfactory. Each air-supply line should extend ~0.95 cm beyond the end of the lift tube, with a minimum clearance between the end of the lift tube and tank bottom of ~2 cm. A 2-in. Sch 40 lift tube with a central ejector suction line is recommended for a compact system.

The solids suspension ability of the three-air-supply agitator with tungsten solids was not seriously decreased when the liquid level was varied from ~52 to 169 cm. However, larger tramp materials, such as spacer wires and hull fragments, present potential lift tube blockage problems and should therefore be removed from the feed stream before entering the digester. To prevent blockage of the steam jet used to empty the tank by any tramp materials, a screen should be placed over the entrance to the jet suction line. Use of both a 0.0625-in. and a 0.125-in. mesh screen over the end of the suction line did not significantly degrade the solids suspension performance of the agitator. The screen also reduced the air lift of solution out of the tank by way of the suction line at higher agitator air flow rates. Because of the aggressive nature of the agitation produced by the recirculator, foaming of the fuel solution may be a problem if adequate disengaging space in the top of the tank is not provided.

Higher-density solutions gave higher levels of solids suspension by virtue of lower particle settling velocities. Therefore, it is expected that concentrated fuel solutions with specific gravity >~1.4 would be somewhat easier to suspend solids in than the test solutions used here.

Dilution levels in the range of 8% to 10% were obtained for the transfer of water at ambient conditions using a Penberthy model GH-3/4 steam jet. These dilution levels are higher than the typically observed values of 3% to 5%, probably because of the occurrence

of condensate in the steam supply line and the relatively small volume of the solution transferred. Solids transfers with the Penberthy jet were essentially complete for the <80-μm-diam tungsten particles.

Level measurements were essentially unaffected by the operation of the intermittent air lift recirculator and the bubbler tube design. Seven different tube designs were tested with a simple 0.25-in. Sch 40 pipe performing as well as any. Density fluctuations in the range of 0.01 to ~0.04 kg/L units can be expected as a result of the normal operation of the agitator with the lower density probe at the recommended distance of ~30.5 cm above the end of the lift tube. Very little reduction in density readout fluctuations was noted when the probes were raised above 30.5 cm.

REFERENCES

1. W. D. Burch et al., *Advanced Fuel Recycle Program Progress Report for Period April 1 to June 30, 1978*, ORNL/TM-6427, September 1978.

2. N. P. Willis, *Annular Tank Mixing Study*, ENICO-1070, Exxon Nuclear Idaho Company, Inc., Idaho Falls, Idaho, February 1981.

3. International Atomic Energy Agency, pp. 27–28 in *Storage Tanks for Liquid Radioactive Wastes, Their Design and Use*, Technical Reports Series No. 135, IAEA, Vienna, 1972.

4. International Atomic Energy Agency, pp. 13–16 in *Handling and Storage of High-Level Radioactive Liquid Wastes Requiring Cooling*, Technical Reports Series No. 191, IAEA, Vienna, 1979.

5. M. W. Cook and E. D. Waters, *Operational Characteristics of Submerged Gas-Lift Circulators*, HW-39432, Hanford Atomic Product Operation, Richland, Wash. December 1955.

6. A. G. W. Lamont, "Air Agitation and Pachuca Tanks," *Can. J. Chem. Eng.* **36**, 153 (1985).

7. H. W. Heiser, "Air Lift Agitators for Varying Tank Levels in Coarse, Heavy Slurries," *Chem. Eng.*, **55**(1), 135 (1948).

8. R. H. Perry and C. H. Chilton, pp. 10–19 in *Chemical Engineers Handbook*, 5th ed., McGraw Hill, 1973.

9. W. J. Filichowski, "Photoelectric Systems: Industries Electronic Eyes," *Mach. Des.*, **48**, 102–107, October 7, 1976.

10. V. Kolar, "Suspending Solid Particles in Liquids by Means of Mechanical Agitation," p. 617 in *Collection of Czechoslovak Chemical Communications*, vol. 26, 1961.

Appendix A

SUMMARY OF SCOUTING TESTS

A.1. SHORT DIGESTER TANK TEST

The single central air-supply agitator tube with the perforated foot-piece distributor (shown in Figs. 2.6 and 2.7) was tested with a plastic, 1.25-in.-ID lift tube. Twenty tests were conducted in which the air flow was varied from ~10 to 25 L/min. Calcium nitrate solution with a specific gravity of ~1.33 was used with tungsten particles (<27-μm diam) at concentrations ranging from 4 to 20 g/L. The perforated foot-piece agitator did not provide sufficient agitation to keep the solids from settling on the bottom of the tank. Varying the elevation of the agitator up to ~7 in. from the bottom of the tank appeared to have little or no effect on the solids suspension ability of the agitator.

The spider sparge air-supply tube agitator shown in Figs. 2.7 and 2.8 was tested with a 1.25-in.-diam plastic lift tube with solids and solutions similar to those used in the perforated foot-piece air-supply test. The air flow to the agitator was varied from ~7.7 to 31 L/min, while the distance between the end of the lift tube and bottom of the tank was varied from ~0 to 3 in. The spider sparge air supply was kept on the bottom of the tank and provided reasonably good agitation of the solids. The solids in the bottom of the tank were kept in constant motion at the higher air flow rates. Two runs were conducted in which two external 0.375-in. air-supply tubes were added to the spider sparge unit. The solids suspension performance of the agitator with the external air-supply lines was improved.

A single test was also conducted using a 1-in.-ID plastic pulse tube in which a 2-s surge of air and liquid was admitted to the digester every 5 s. The pulse tube did not suspend the solids as well as the other agitators.

Several tests were done using 1190- to 4750-μm-diam 304L stainless steel solids at a concentration of 20 to 40 g/L in calcium nitrate solution with the agitators described in Table A.1. The air supply pressure was varied from 10 to 70 psig for each test. None of

Table A.1. Description of agitators used in the short digester tank scouting tests with 1190- to 4750-μm stainless steel particles

Agitator type	Description
A	1-in.-ID pulse tube
B	Spider sparge tube, centrally located in 1.25-in.-OD lift tube
C	Perforated foot-piece air-supply tube centrally located in 1.25-in.-ID lift tube
D	Perforated foot-piece air-supply tube with a single external air supply outside a 1.25-in.-ID lift tube
E	Perforated foot-piece air-supply tube with two external air-supply tubes located 180° apart around a 1.25-in.-ID lift tube
F	Same as E, except without perforated foot-piece air-supply tube
G	Annular air-supply pulsed lift tube

the agitators completely suspended the solids except types E and F. Type F was superior to type E because it had less of a tendency for pluggage of the lift tube.

The type F agitator was further tested with tungsten powder (<127-μm diam) in calcium nitrate solution. The agitator performed well at all air flows tested but was best at the higher air flows (~40 L/min).

Several tests were conducted with the type G agitator in water using 10 g/L of 297- to 595-μm-diam stainless steel particles. The agitator was operated in an intermittent mode with an air flow of ~9.4 L/min. The minimum time for the air flow to be on was ~4 to 5 s, and the maximum time for the air flow to be off was not well defined by the tests. However, the tests did indicate a tendency for solid to collect in one area of the tank thus making solids suspension difficult by forcing the air to flow up the outside of the agitator.

A.2. TALL DIGESTER TANK TESTS

Several tests were conducted using three external 0.375-in. Sch 40 air-supply tubes around a 3-in.-OD plastic lift tube having a central 1-in. Sch 40 steam jet suction line. The solution was water with 5 g/L stainless steel solids (1190- to 4750-μm diam). The air flow rate for the tests was varied from ~62.4 to 103.6 L/min. The air-supply-line outlets shown in Figs. 2.15 and 2.16 were tested as the separation between the end of the air-supply lines and the end of the lift tube was varied. The distance between the end of the lift tube and bottom of the tank was also varied. In each series of tests, the air flow to the agitator was intermittent with the length of time for flow and no flow varied to give the most rapid start-up and efficient solids suspension. These tests were used to determine the design of the air outlets for the agitator. The most efficient design was that shown in Fig. 2.15e.

Blockage removal tests were also conducted in which the lift tube was plugged with 120 g of spacer wires in addition to the large (1190- to 4750-μm-diam) stainless steel particles. The time required to remove the plug was measured for each run. The air flow rate and the type of agitator used were varied. The agitators were those shown in Figs. 2.15d and 2.15e, and a single central air-supply line was 1-in. Sch 40 pipe. The single central air-supply line removed lift-tube blockages somewhat faster than the other agitators, but it was not as effective at solids suspension as the external air-supply-line designs.

Appendix B

SHORT DIGESTER TANK SOLIDS SUSPENSION TEST SUMMARY

RUN#	S.G.	ELV. CM	AIR L/MIN	VOL L	TAVE G/L	%SUS	%ERR	ON TIME SEC	OFF TIME SEC	CODES 123456789
140	1.32	0.79	5.28	42.00	4.98	122.66	12.36	******	0.00	AAGDAFAAA
140	1.32	0.79	5.28	40.05	4.96	92.00	14.17	******	0.00	AAGDAFAAA
140	1.32	0.79	5.28	42.00	4.99	107.70	13.71	******	0.00	AAGDAFAAA
140	1.32	0.79	5.28	39.92	4.97	118.56	21.51	******	0.00	AAGDAFAAA
141	1.32	0.95	5.28	42.00	10.00	103.31	10.22	******	0.00	AAGDAFAAA
141	1.32	0.95	5.28	42.00	9.99	105.28	16.08	******	0.00	AAGDAFAAA
141	1.32	0.95	5.28	40.16	9.99	108.24	14.63	******	0.00	AAGDAFAAA
141	1.32	0.95	5.28	38.34	9.95	112.90	13.61	******	0.00	AAGDAFAAA
142	1.35	0.79	10.13	42.01	10.08	61.78	31.89	******	0.00	AAGDAFAAA
142	1.35	0.79	10.13	42.04	10.05	72.65	39.97	******	0.00	AAGDAFAAA
143	1.35	0.79	10.13	42.00	10.01	94.68	15.00	******	0.00	AAGDAFAAA
143	1.35	0.79	10.13	41.12	10.02	90.53	5.31	******	0.00	AAGDAFAAA
144	1.35	0.79	10.13	40.17	10.04	90.38	10.71	******	0.00	AAGDAFAAA
145	1.35	0.79	14.98	39.29	10.06	91.19	16.64	******	0.00	AAGDAFAAA
146	1.35	0.79	14.98	42.00	10.01	87.10	5.58	******	0.00	AAGDAFAAA
147	1.35	0.79	14.98	41.24	10.05	79.10	9.60	******	0.00	AAGAAFAAA
148	1.35	0.79	14.98	40.39	10.09	74.32	5.83	******	0.00	AAGAAFAAA
149	1.35	0.79	14.98	39.59	10.14	76.78	9.48	******	0.00	AAGAAFAAA
150	1.35	0.79	19.84	42.00	10.01	90.42	6.61	******	0.00	AAGAAFAAA
151	1.35	0.79	19.84	41.07	10.04	90.54	3.54	******	0.00	AAGAAFAAA
152	1.35	0.79	19.84	39.87	10.07	87.70	3.06	******	0.00	AAGAAFAAA
153	1.35	0.79	29.54	38.92	10.10	87.76	3.16	******	0.00	AAGDAFAAA
154	1.36	0.79	29.54	42.00	10.01	89.35	12.78	******	0.00	AAGDAFAAA
155	1.36	0.79	29.54	41.05	10.04	88.14	4.77	******	0.00	AAGDAFAAA
156	1.36	0.79	39.25	40.04	10.07	89.83	2.04	******	0.00	AAGDAFAAA
157	1.36	0.79	39.25	39.13	10.09	88.64	3.11	******	0.00	AAGDAFAAA
158	1.36	0.79	39.25	42.00	10.01	91.41	30.93	******	0.00	AAGDAFAAA
159	1.36	0.79	39.25	41.07	10.03	92.25	6.75	******	0.00	AAGDAFAAA
160	1.36	0.79	39.25	40.15	10.05	85.22	8.00	******	0.00	AAGDAFAAA
161	1.36	0.79	5.28	42.00	20.02	85.52	5.67	******	0.00	AAGDAFAAA
162	1.36	0.79	5.28	41.44	20.06	85.25	6.49	******	0.00	AAGDAFAAA
163	1.36	0.79	10.13	40.97	20.09	85.96	6.86	******	0.00	AAGDAFAAA
164	1.36	0.79	14.98	40.40	20.13	86.09	9.53	******	0.00	AAGDAFAAA
165	1.35	0.79	19.84	42.00	20.01	84.39	17.05	******	0.00	AAGDAFAAA
166	1.35	0.79	29.54	41.63	20.03	95.76	6.34	******	0.00	AAGDAFAAA
167	1.35	0.79	39.25	41.25	20.04	95.65	3.43	******	0.00	AAGAAFAAA
168	1.35	0.79	10.13	40.90	20.07	75.32	16.29	******	0.00	AAGAAFAAA
169	1.37	0.79	19.84	42.00	20.01	89.62	12.12	******	0.00	AAGAAFAAA
170	1.37	0.79	29.54	41.66	20.03	87.50	7.87	******	0.00	AAGAAFAAA
171	1.37	0.79	39.25	41.32	20.04	93.65	4.10	******	0.00	AAGAAFAAA
172	1.37	0.79	10.13	40.96	20.06	83.58	13.09	******	0.00	AAGAAFAAA
173	1.37	0.79	19.84	42.00	20.02	84.94	12.91	******	0.00	AAGAAFAAA
174	1.37	0.79	29.54	41.37	20.05	83.83	7.38	******	0.00	AAGAAFAAA
175	1.37	0.79	39.25	41.06	20.08	77.02	10.66	******	0.00	AAGAAFAAA
176	1.37	0.79	5.28	40.80	20.11	82.06	6.49	******	0.00	AAGAAFAAA
176	1.37	0.95	5.28	40.41	20.14	89.92	2.05	******	0.00	AAGAAFAAA
177	1.37	0.95	10.13	39.90	20.16	92.63	2.42	******	0.00	AAGAAFAAA
178	1.37	0.95	19.84	39.29	20.18	87.42	4.86	******	0.00	AAGAAFAAA
179	1.37	0.95	29.54	39.01	20.20	88.88	1.91	******	0.00	AAGAAFAAA
180	1.30	0.95	39.25	42.00	20.01	86.12	19.57	******	0.00	AAGAAFAAA
181	1.30	1.91	5.28	41.68	20.05	69.73	8.57	******	0.00	AAGAAFAAA
182	1.30	1.91	10.13	41.39	20.08	78.22	12.65	******	0.00	AAGAAFAAA
183	1.30	1.91	19.84	41.13	20.11	76.17	7.33	******	0.00	AAGAAFAAA

184	1.31	1.91	29.54	42.00	20.01	79.15	23.39	******	0.00	AAGAAFAAA
185	1.31	1.91	39.25	41.75	20.03	86.10	20.78	******	0.00	AAGAAFAAA
186	1.31	1.91	5.28	41.48	20.09	41.28	13.82	******	0.00	AAGAAFAAA
187	1.31	2.54	19.84	41.17	20.17	53.99	16.17	******	0.00	AAGAAFAAA
188	1.31	2.54	39.25	40.88	20.22	70.31	19.33	******	0.00	AAGAAFAAA
189	1.31	0.79	5.28	42.00	20.01	86.36	8.64	******	0.00	AAGABFABA
190	1.00	2.54	39.25	42.00	5.01	34.60	50.70	******	0.00	AAGABFABA
191	1.00	0.79	39.25	42.00	20.01	84.64	13.51	******	0.00	AAGABFABA
192	1.31	2.54	39.25	42.00	20.02	69.63	7.83	******	0.00	AFGABFABA
193	1.31	2.54	5.28	42.00	5.01	27.43	13.88	******	0.00	AAGABFABA
194	1.00	2.54	5.28	42.00	20.06	29.58	12.42	******	0.00	AFGABFABA
195	1.31	0.79	39.25	42.00	5.00	90.90	11.43	******	0.00	AFGABFABA
196	1.00	0.79	5.28	42.00	5.01	60.90	19.02	******	0.00	AFGABFABA
197	1.00	1.59	5.28	42.00	20.07	27.29	18.39	******	0.00	AAGABFBBA
198	1.00	0.79	5.28	42.00	5.01	70.92	4.35	******	0.00	AAGABFBBA
199	1.00	1.59	39.25	42.00	5.01	52.95	21.80	******	0.00	CAGABFBBA
200	1.29	0.79	39.25	42.00	5.00	96.71	35.28	******	0.00	AAGABFBBA
201	1.00	0.79	39.25	42.00	20.01	93.16	3.63	******	0.00	CAGABFBBA
202	1.29	0.79	5.28	42.00	20.02	87.19	17.37	******	0.00	CAGABFBBA
203	1.31	1.59	5.28	42.00	5.03	48.45	10.23	******	0.00	CAGABFBBA
204	1.31	0.79	39.25	42.00	5.01	68.73	10.69	******	0.00	AAGABFBBA
205	1.00	1.59	5.28	42.00	20.04	58.24	13.61	******	0.00	AAGABFBBA
206	1.00	1.59	39.25	42.00	5.01	69.83	18.06	******	0.00	CAGABFBBA
207	1.00	0.79	39.25	42.00	20.01	91.87	6.83	******	0.00	CAGABFBBA
208	1.00	0.79	5.28	42.00	5.02	55.41	6.58	******	0.00	AAGABFBBA
209	1.30	1.59	39.25	42.00	20.03	82.40	6.77	******	0.00	AAGABFBBA
210	1.30	1.59	9.81	38.00	20.02	96.13	15.58	10.00	30.00	FAGAHFCFA
211	1.00	1.59	6.54	38.00	5.01	93.55	51.17	1.00	5.00	FAGAHFCFA
212	1.30	1.59	1.27	38.00	5.04	28.77	266.35	1.00	30.00	GAGAHFCFA
213	1.00	1.59	26.16	38.00	20.00	99.44	4.94	10.00	5.00	GAGAHFCFA
214	1.00	0.00	1.27	38.00	20.17	5.57	55.01	1.00	30.00	FAGAHFCFA
215	1.30	0.00	6.54	38.00	20.02	96.30	25.26	1.00	5.00	GAGAHFCFA
216	1.00	0.00	9.81	38.00	5.00	96.23	13.32	10.00	30.00	GAGAHFCFA
217	1.30	0.00	26.16	38.00	5.00	89.79	5.61	10.00	5.00	FAGAHFCFA
218	1.00	0.79	10.13	42.00	20.05	43.15	15.84	******	0.00	AAGABFDBA
219	1.00	0.79	48.95	41.65	20.12	77.46	6.99	******	0.00	AAGABFDBA
220	1.00	0.79	19.84	41.19	20.20	61.23	9.84	******	0.00	AAGABFDBA
221	1.00	0.79	39.25	40.64	20.28	74.89	5.40	******	0.00	AAGABFDBA
222	1.00	0.79	29.54	40.09	20.36	77.26	10.34	******	0.00	AAGABFDBA
223	1.00	0.95	10.13	42.00	20.09	50.68	11.91	******	0.00	AAGABFDBA
224	1.00	0.95	48.95	41.33	20.20	84.96	16.50	******	0.00	AAGABFDBA
225	1.00	0.95	19.84	40.67	20.29	55.68	11.04	******	0.00	AAGABFDBA
226	1.00	0.95	39.25	39.99	20.40	77.70	10.14	******	0.00	AAGABFDBA
227	1.00	0.95	29.54	39.35	20.50	69.01	9.42	******	0.00	AAGABFDBA
228	1.00	0.00	9.81	38.00	20.16	17.87	131.20	10.00	30.00	AAGABFDBA
229	1.00	0.00	10.13	37.25	20.36	81.71	8.22	******	0.00	BAGAHFEFA
230	1.00	0.00	19.84	36.70	20.43	89.71	19.29	******	0.00	BAGAHFEFA
231	1.00	0.00	29.54	36.09	20.45	92.21	8.75	******	0.00	BAGAHFEFA
232	1.00	0.00	39.25	35.55	20.47	95.96	9.62	******	0.00	BAGAHFEFA
233	1.00	0.48	36.13	42.00	20.01	92.09	6.07	4.00	0.50	BAGAHFEFA
234	1.00	0.48	36.95	41.45	20.04	90.92	7.83	5.00	0.50	BAGAHFEFA
235	1.00	0.48	37.51	40.90	20.06	89.70	4.61	6.00	0.50	BAGAHFEFA
236	1.00	0.48	37.93	40.35	20.09	89.88	7.17	7.00	0.50	BAGAHFEFA
237	1.00	0.48	38.25	39.86	20.11	87.78	11.70	8.00	0.50	BAGAHFEFA
238	1.00	0.48	38.50	39.36	20.14	89.60	7.72	9.00	0.50	BAGAHFEFA
239	1.00	0.48	38.71	38.84	20.17	88.37	7.30	10.00	0.50	BAGAHFEFA
240	1.00	0.48	32.51	38.33	20.20	96.17	7.83	4.00	1.00	BAGAHFEFA
241	1.00	0.48	27.09	37.72	20.21	99.29	11.80	4.00	2.00	BAGAHFEFA
242	1.00	0.48	23.22	37.17	20.21	99.08	9.96	4.00	3.00	BAGAHFEFA

243	1.00	0.48	20.32	36.54	20.22	95.77	12.28	4.00	4.00	BAGAHFEFA
244	1.00	0.48	18.06	36.02	20.23	98.79	15.14	4.00	5.00	BAGAHFEFA
245	1.00	0.48	16.26	35.51	20.24	93.35	10.24	4.00	6.00	BAGAHFEFA
246	1.00	0.48	14.78	34.95	20.27	93.88	17.82	4.00	7.00	BAGAHFEFA
247	1.00	0.48	13.55	34.42	20.29	91.45	18.65	4.00	8.00	BAGAHFEFA
248	1.00	0.48	12.50	33.89	20.32	90.96	16.47	4.00	9.00	BAGAHFEFA
249	1.00	0.48	11.61	33.31	20.35	93.04	22.21	4.00	10.00	BAGAHFEFA
250	1.30	0.00	38.71	42.00	5.00	94.38	7.30	10.00	0.50	DAGACFFCA
251	1.30	0.00	61.46	41.46	5.01	95.56	2.93	10.00	0.50	DAGACFFCA
252	1.30	0.00	38.71	40.96	10.14	89.85	5.60	10.00	0.50	DAGACFFCA
253	1.30	0.00	61.46	40.44	10.15	92.52	2.84	10.00	0.50	DAGACFFCA
254	1.30	0.00	38.71	39.89	15.43	89.82	6.15	10.00	0.50	DAGACFFCA
255	1.30	0.00	61.46	39.38	15.45	89.63	3.02	10.00	0.50	DAGACFFCA
256	1.30	0.00	38.71	42.00	20.01	94.42	2.21	10.00	0.50	DAGACFFCA
257	1.30	0.00	61.46	41.51	20.02	95.78	1.45	10.00	0.50	DAGACFFCA
258	1.00	0.00	38.71	42.00	10.00	99.97	6.79	10.00	0.50	DAFACFFCA
259	1.00	0.00	62.49	41.50	10.00	98.46	2.37	10.00	0.50	DAFACFFCA
260	1.00	0.00	38.71	40.94	20.27	95.36	3.07	10.00	0.50	DAFACFFCA
261	1.00	0.00	62.49	40.35	20.28	97.81	3.99	10.00	0.50	DAFACFFCA
262	1.30	0.00	61.46	42.00	20.01	96.21	1.98	10.00	0.50	DAAACFFCA
263	1.30	0.00	61.46	41.52	20.02	95.85	2.11	10.00	0.50	DABACFFCA
264	1.30	0.00	61.46	41.00	20.03	95.29	2.03	10.00	0.50	DACACFFCA
265	1.30	0.00	61.46	40.47	20.04	94.27	1.88	10.00	0.50	DADACFFCA
266	1.30	0.00	61.46	39.98	20.05	92.76	1.89	10.00	0.50	DAEACFFCA
267	1.00	0.00	62.49	42.00	20.01	94.52	6.66	10.00	0.50	DDGACFFCA
268	1.00	0.00	62.49	36.76	22.59	89.59	5.56	10.00	0.50	DBGACFFCA
269	1.00	0.00	62.49	36.16	22.63	87.46	6.58	10.00	0.50	DCGACFFCA
270	1.00	0.00	62.49	35.58	22.67	89.14	6.44	10.00	0.50	DEGACFFCA
271	1.00	0.00	62.49	42.00	20.01	97.31	6.94	10.00	0.50	DAGACFFCA
272	1.00	0.00	62.49	41.39	20.02	95.83	6.33	10.00	0.50	DAGACFFCA
273	1.00	0.00	62.49	40.79	20.03	93.91	4.60	10.00	0.50	DAGACFFCA
274	1.00	0.00	62.49	40.21	20.05	91.83	3.93	10.00	0.50	DAGACFFCA
275	1.00	0.00	62.49	39.63	20.08	91.23	4.97	10.00	0.50	DAGACFFCA
276	1.00	0.00	62.49	38.96	20.11	91.27	8.46	10.00	0.50	DAGACFFCA
277	1.00	0.00	62.49	38.39	20.14	88.89	6.09	10.00	0.50	DAGACFFCA
278	1.00	0.00	62.49	37.74	20.17	94.25	7.53	10.00	0.50	DAGACFFCA
279	1.00	0.00	38.71	42.00	5.01	76.78	8.35	10.00	0.50	DGGACFGCA
280	1.00	0.00	52.15	41.42	5.03	73.92	8.65	10.00	0.50	DGGACFGCA
281	1.00	0.00	38.71	40.86	5.04	70.60	25.55	10.00	0.50	DGGACFFCA
282	1.00	0.00	62.49	40.31	5.06	76.90	4.23	10.00	0.50	DGGACFFCA
283	1.00	0.48	38.71	39.77	5.08	77.82	6.09	10.00	0.50	DGGACFFCA
284	1.00	0.48	62.49	39.24	5.10	75.34	2.47	10.00	0.50	DGGACFFCA
285	1.00	0.00	38.71	42.00	20.01	91.41	3.22	10.00	0.50	DGGACFFCA
286	1.00	0.00	62.49	41.40	20.04	90.33	8.41	10.00	0.50	DGGACFFCA
287	1.00	0.00	38.71	42.00	20.02	88.57	2.58	10.00	0.50	DHGACFFCA
288	1.00	0.00	62.49	41.37	20.05	92.63	2.65	10.00	0.50	DHGACFFCA
289	1.00	0.00	18.02	40.69	20.09	80.87	8.63	10.00	0.50	DHGACFFCA
290	1.00	0.00	62.49	40.04	20.14	91.04	3.37	10.00	0.50	DHFACFFCA
291	1.00	0.00	38.71	39.37	20.17	89.08	2.43	10.00	0.50	DHFACFFCA
292	1.00	0.00	18.02	38.67	20.23	75.11	5.63	10.00	0.50	DHFACFFCA
293	1.00	-1.27	38.71	42.00	20.02	90.54	4.49	10.00	0.50	DHGBCFFCA
294	1.00	-1.27	62.49	41.36	20.05	92.59	4.23	10.00	0.50	DHGBCFFCA
295	1.00	-1.27	18.02	40.66	20.07	87.41	7.42	10.00	0.50	DHGBCFFCA
296	1.00	-1.27	7.68	40.01	20.11	91.16	4.88	10.00	0.50	DHGBCFFCA
297	1.00	-1.27	38.71	39.35	20.14	88.86	5.84	10.00	0.50	DHGBCFFCA
298	1.00	-1.27	62.49	38.68	20.18	91.09	4.47	10.00	0.50	DHGBCFFCA
299	1.00	-1.27	18.02	38.05	20.22	84.75	7.24	10.00	0.50	DHGBCFFCA
300	1.00	-1.27	7.68	37.41	20.27	87.48	4.99	10.00	0.50	DHGBCFFCA

301	1.00	-1.27	38.71	36.79	20.31	89.52	7.66	10.00	0.50	DHABCFFCA
302	1.00	-1.27	38.71	36.19	20.34	91.87	4.16	10.00	0.50	DHABCFFCA
303	1.00	-1.27	38.71	35.55	20.37	86.89	6.65	10.00	0.50	DHBBCFFCA
304	1.00	-1.27	38.71	34.97	20.42	90.91	4.47	10.00	0.50	DHBBCFFCA
305	1.00	-1.27	38.71	42.00	20.02	89.55	6.74	10.00	0.50	DHCBCFFCA
306	1.00	-1.27	38.71	41.38	20.05	91.17	7.70	10.00	0.50	DHCBCFFCA
307	1.00	-1.27	38.71	40.75	20.07	94.43	5.10	10.00	0.50	DHDBCFFCA
308	1.00	-1.27	38.71	40.14	20.09	94.03	6.46	10.00	0.50	DHDBCFFCA
309	1.00	-1.27	38.71	39.52	20.10	95.93	4.10	10.00	0.50	DHHBCFFCA
310	1.00	-1.27	38.71	38.92	20.12	97.17	5.67	10.00	0.50	DHHBCFFCA
311	1.00	-1.27	38.71	38.31	20.12	97.48	4.90	10.00	0.50	DHEBCFFCA
312	1.00	-1.27	38.71	37.72	20.13	97.56	4.50	10.00	0.50	DHEBCFFCA
313	1.00	-1.27	38.71	37.12	20.13	101.43	16.84	10.00	0.50	DHFBCFFCA
314	1.00	-1.27	38.71	36.51	20.13	100.11	3.65	10.00	0.50	DHFBCFFCA
315	1.00	-1.27	38.71	42.00	20.01	90.95	10.33	10.00	0.50	DHGBCFHCA
316	1.00	-1.27	38.71	41.38	20.03	96.76	2.37	10.00	0.50	DHGBCFHCA
317	1.00	-1.27	38.71	40.76	20.04	93.49	8.45	10.00	0.50	DHGBCFPCA
318	1.00	-1.27	38.71	40.17	20.06	96.27	2.28	10.00	0.50	DHGBCFPCA
319	1.00	-1.27	38.71	39.57	20.07	96.22	3.29	10.00	0.50	DHGBCFQCA
320	1.00	-1.27	38.71	38.95	20.09	93.96	2.29	10.00	0.50	DHGBCFQCA
321	1.00	-1.27	38.71	42.00	19.99	104.45	3.40	10.00	0.50	DHGBCFFCA
322	1.00	-1.27	38.71	41.35	19.98	103.63	2.10	10.00	0.50	DHGBCFFCA
323	1.00	-1.27	36.95	40.73	19.97	103.31	18.78	5.00	0.50	DHGBCDFCA
324	1.00	-1.27	56.69	40.10	19.96	104.52	2.55	5.00	0.50	DHGBCDFCA
325	1.00	-1.27	36.95	42.00	19.99	106.30	6.54	5.00	0.50	DHGBCAFCA
326	1.00	-1.27	56.69	41.33	19.97	109.43	3.61	5.00	0.50	DHGBCAFCA
327	1.00	-1.27	36.95	40.66	19.93	109.52	2.33	5.00	0.50	DHGBCDFCA
328	1.00	-1.27	56.69	40.00	19.90	111.82	1.68	5.00	0.50	DHGBCDFCA
329	1.00	-1.27	29.03	42.00	20.01	94.77	3.39	10.00	4.00	DHGBCCFCA
330	1.00	-1.27	44.54	41.33	20.03	95.97	2.46	10.00	4.00	DHGBCCFCA
331	1.00	-1.27	29.03	40.64	20.04	97.40	5.07	10.00	4.00	DHGBCBFCA
332	1.00	-1.27	44.54	39.92	20.05	95.63	7.18	10.00	4.00	DHGBCBFCA
333	1.00	-1.27	29.03	39.20	20.06	97.05	3.27	10.00	4.00	DHGBCCFCA
334	1.00	-1.27	44.54	38.44	20.08	95.68	2.72	10.00	4.00	DHGBCCFCA
335	1.00	-1.27	36.13	37.71	20.09	96.86	4.14	4.00	0.50	DHGBCFFCA
336	1.00	-1.27	55.43	37.05	20.10	96.08	2.92	4.00	0.50	DHGBCFFCA
337	1.00	-1.59	7.68	42.00	20.02	89.55	8.30	10.00	0.50	DHGCCFFCA
338	1.00	-1.59	18.02	41.28	20.06	84.40	7.21	10.00	0.50	DHGCCFFCA
339	1.00	-1.59	38.71	40.57	20.10	96.31	5.51	10.00	0.50	DHGCCFFCA
340	1.00	-1.59	59.39	39.85	20.11	98.38	4.59	10.00	0.50	DHGCCFFCA
341	1.00	-1.59	38.71	42.00	20.01	92.98	4.00	10.00	0.50	DHGCCFFCA
342	1.00	-1.59	59.39	41.33	20.03	95.81	4.99	10.00	0.50	DHGCCFFCA
343	1.00	-1.59	38.71	40.64	20.06	88.05	3.94	10.00	0.50	DHFCCFFCA
344	1.00	-1.59	59.39	39.96	20.09	95.12	3.93	10.00	0.50	DHFCCFFCA
345	1.00	-1.59	38.71	42.00	19.98	113.11	6.02	10.00	0.50	DHFCCFFCA
346	1.00	-1.59	59.39	41.33	19.94	113.70	3.53	10.00	0.50	DHFCCFFCA
347	1.00	-1.59	44.54	40.65	19.87	126.55	5.54	10.00	4.00	DHFCCFFCA
348	1.00	-1.59	55.43	39.97	19.78	124.99	5.03	4.00	0.50	DHFCCFFCA

CODE DEFINITIONS

1A---QUADRI AIR SUPPLY,TUNGSTEN(100% <28 MICRONS), SHORT TANK.
1C---QUADRI AIR SUPPLY,STAINLESS STEEL 1190-4750 MICRONS,SHORT TANK.
1F---PULSE AIR SUPPLY,TUNGSTEN(100%<28 MICRONS), SHORT TANK.
1G---PULSE AIR SUPPLY,STAINLESS STEEL 1190-4750 MICRONS,SHORT TANK.
1B---ANNULAR AIR SUPPLY,TUNGSTEN(100%<88 MICRONS), SHORT TANK.
1D---TRI AIR SUPPLY,TUNGSTEN(100%<88 MICRONS), SHORT TANK.
2A---SPHERICAL TANK BOTTOM WITH NO SOAP.
2F---SPHERICAL TANK BOTTOM WITH 10 GRAM SOAP.
2D---SPHERICAL TANK BOTTOM WITH 5 GRAM SOAP.
2B---SPHERICAL TANK BOTTOM WITH 2 GRAM SOAP.
2C---SPHERICAL TANK BOTTOM WITH 4 GRAM SOAP.
2E---SPHERICAL TANK BOTTOM WITH 8 GRAM SOAP.
2G---TOROIDAL TANK BOTTOM WITH NO SOAP.
2H---FLAT TANK BOTTOM WITH NO SOAP.
3G---NO WIRES IN TANK.
3F---100 GRAM WIRES IN TANK.
3A---5 GRAM WIRES IN TANK.
3B---10 GRAM WIRES IN TANK.
3C---20 GRAM WIRES IN TANK.
3D---40 GRAM WIRES IN TANK.
3E---80 GRAM WIRES IN TANK.
3H---60 GRAM WIRES IN TANK.
4D--- 3/8" SPACER ON LIFT TUBE.
4A---NO SPACER ON LIFT TUBE.
4B--- 1/2" SPACER ON LIFT TUBE.
4C--- 5/8" SPACER ON LIFT TUBE.
5A--- 1/4" OD STRAIGHT AIR LINES.
5B--- 1/4" OD BENT AIR LINES (15 DEG. BEND,45 DEG.CUT)
5H--- NOT APPLICABLE.
5C--- 3/8" BENT,CRIMPED AIR LINES (45 DEG.BEND)
6F---SAMPLES TAKEN AT RANDOM.
6D---SAMPLES TAKEN AT BEGINNING OF VENT CYCLE.
6A---SAMPLES TAKEN 1/2 WAY THROUGH PULSE CYCLE.
6C---SAMPLES TAKEN AT END OF PULSE CYCLE.
6B---SAMPLES TAKEN AT END OF VENT CYCLE.
7A---2" OD LIFT TUBE.
7B---2" OD LIFT TUBE WITH 3/8" SUCTION LINE.
7C---2" OD PULSE TUBE.
7D---2"OD LIFT TUBE WITH 1" OD SUCTION LINE.
7E---ANNULAR AIR SUPPLY:2" OD LIFT TUBE WITH 1" ID SUCTION LINE.
7F---3" OD LIFT TUBE,1" SCH40 SUCTION LINE.
7G---3" OD LIFT TUBE,NO SUCTION LINE.
7H---3" OD LIFT TUBE,1" SCH40 SUCTION LINE; 3/8" OFF CENTER.
7P---3" OD LIFT TUBE,1" SCH40 SUCTION LINE; 1/4" OFF CENTER.
7Q---3" OD LIFT TUBE,1" SCH40 SUCTION LINE; 1/8" OFF CENTER.
8A---AIR LINES 1/4" BELOW LIFT TUBE.
8B---AIR LINES 1/8" BELOW LIFT TUBE.
8F---NOT APPLICABLE.
8C---AIR LINES 3/32"(AVERAGE)BELOW LIFT TUBE.
9A---PERTINENT DATA COMPLETE IN CODES.

Appendix C

TALL DIGESTER TANK SOLIDS SUSPENSION TEST SUMMARY

****

RUN#	S.G.	ELV. CM	AIR L/MIN	VOL L	TAVE G/L	%SUS	%ERR	ON TIME SEC	OFF TIME SEC	CODES 123456789
400	1.00	0.95	60.61	90.86	20.02	77.05	1.98	10.00	4.00	EHGDDFFAA
401	1.00	0.95	80.81	89.99	20.07	78.19	3.37	10.00	0.50	EHGDDFFAA
402	1.00	0.95	80.81	89.09	20.11	76.60	4.51	10.00	0.50	EHGDDFFAA
403	1.00	0.95	60.61	88.30	20.15	76.22	6.45	10.00	4.00	EHGDDFFAA
404	1.00	0.95	60.59	90.86	20.01	88.66	2.52	10.00	4.00	EHGDDFFAA
405	1.00	0.95	80.94	90.05	20.03	88.31	2.72	10.00	0.50	EHGDDFFAA
406	1.00	0.95	47.14	89.27	20.05	86.26	6.67	10.00	0.50	EHGDDFFAA
407	1.00	0.95	35.35	88.48	20.08	87.26	5.27	10.00	4.00	EHGDDFFAA
408	1.00	1.59	60.70	94.86	20.01	87.91	4.00	10.00	4.00	EHGCDFFAA
409	1.00	1.59	81.01	94.02	20.03	89.18	2.57	10.00	0.50	EHGCDFFAA
410	1.00	1.59	60.70	93.21	20.05	87.97	2.66	10.00	4.00	EHGCDFFAA
411	1.00	1.59	80.94	92.44	20.07	88.54	3.17	10.00	0.50	EHGCDFFAA
412	1.00	1.59	116.39	94.86	20.01	90.18	2.37	10.00	4.00	EHGCDFFDA
413	1.00	1.59	94.70	94.08	20.03	89.00	2.73	10.00	4.00	EHGCDFFDA
414	1.00	1.59	35.43	93.29	20.05	87.86	3.29	10.00	4.00	EHGCDFFDA
415	1.00	1.59	94.57	92.54	20.06	89.35	3.45	10.00	4.00	EHGCDFFDA
416	1.00	1.59	116.46	91.80	20.08	89.68	4.66	10.00	4.00	EHGCDFFDA
417	1.00	1.59	35.35	91.08	20.10	89.54	3.39	10.00	4.00	EHGCDFFDA
418	1.00	0.95	35.27	94.86	20.04	68.69	6.10	10.00	4.00	EHGDDFFEA
419	1.00	0.95	60.70	93.64	20.10	87.46	2.25	10.00	4.00	EHGDDFFEA
420	1.00	0.95	94.25	92.54	20.13	87.82	2.83	10.00	4.00	EHGDDFFEA
421	1.00	0.95	115.71	91.44	20.16	87.80	2.23	10.00	4.00	EHGDDFFEA
422	1.00	0.95	15.24	90.32	20.19	83.68	3.17	10.00	4.00	EHGDDFFEA
423	1.00	0.95	15.24	89.24	20.23	83.15	5.22	10.00	4.00	EHGDDFFEA
424	1.00	0.95	35.43	94.86	20.01	84.82	2.29	10.00	4.00	EHGDDFFEA
425	1.00	0.95	60.48	94.01	20.04	86.08	3.00	10.00	4.00	EHGDDFFEA
426	1.00	0.95	115.44	93.06	20.07	87.77	17.09	10.00	4.00	EHGDDFFEA
427	1.00	0.95	35.83	92.03	20.10	80.48	7.11	10.00	4.00	EHGDEFFEA
428	1.00	0.95	62.78	91.11	20.14	80.46	8.30	10.00	4.00	EHGDEFFEA
429	1.00	0.95	119.57	90.19	20.18	86.39	3.23	10.00	4.00	EHGDEFFEA
430	1.00	0.95	37.63	89.27	20.21	87.56	1.51	10.00	4.00	EHGDEFFEA
431	1.00	0.95	63.53	88.47	20.23	89.56	2.58	10.00	4.00	EHGDEFFEA
432	1.00	0.95	118.26	87.68	20.25	85.79	4.67	10.00	4.00	EHGDEFFEA
433	1.00	0.95	38.53	98.86	20.02	84.99	1.49	10.00	4.00	EHGDFFFEA
434	1.00	0.95	65.41	97.96	20.05	79.22	12.41	10.00	4.00	EHGDFFFEA
435	1.00	0.95	122.80	96.95	20.09	79.34	9.75	10.00	4.00	EHGDFFFEA
436	1.00	0.95	122.80	95.93	20.14	80.96	10.90	10.00	4.00	EHGDFFFEA
437	1.00	0.95	35.67	94.98	20.17	83.90	8.55	10.00	4.00	EHGDFFFEA
438	1.00	0.95	61.15	93.97	20.20	86.14	1.90	10.00	4.00	EHGDFFFEA
439	1.00	0.95	86.87	92.92	20.24	83.99	1.48	10.00	4.00	EHGDFFFEA
440	1.00	0.95	88.13	91.88	20.28	84.31	1.82	10.00	4.00	EHGDFFFEA
441	1.00	0.95	86.87	70.00	20.00	96.26	4.61	10.00	4.00	EHGDFFFEA
442	1.00	0.95	85.59	39.30	20.01	86.95	3.71	10.00	4.00	EHGDFFFEA
443	1.00	0.95	85.46	8.70	20.03	89.56	1.69	10.00	4.00	EHGDFFFEA
444	1.00	0.95	34.45	98.86	20.01	86.76	2.53	10.00	4.00	EHGDGFFEA
445	1.00	0.95	57.51	97.92	20.05	76.10	13.01	10.00	4.00	EHGDGFFEA
446	1.00	0.95	103.59	97.02	20.08	86.59	3.43	10.00	4.00	EHGDGFFEA
447	1.00	0.95	34.45	96.10	20.11	87.05	1.84	10.00	4.00	EHGDGFFEA
448	1.00	0.95	57.15	95.19	20.13	87.26	2.55	10.00	4.00	EHGDGFFEA
449	1.00	0.95	102.68	94.34	20.16	85.16	8.19	10.00	4.00	EHGDGFFEA
450	1.00	0.95	102.53	70.00	20.01	87.57	2.14	10.00	4.00	EHGDGFFEA
451	1.00	0.95	101.30	39.30	20.01	85.30	1.70	10.00	4.00	EHGDGFFEA
452	1.00	0.95	101.14	8.70	20.01	97.13	4.20	10.00	4.00	EHGDGFFEA

453	1.00	0.95	34.03	98.86	20.01	86.93	8.35	10.00	4.00	EHGDGFFEA
453	1.00	0.95	56.68	98.03	20.03	87.17	1.46	10.00	4.00	EHGDGFFEA
454	1.00	0.95	101.30	97.15	20.06	86.91	2.05	10.00	4.00	EHGDGFFEA
455	1.00	0.95	101.91	96.28	20.08	88.29	3.02	10.00	4.00	EHGDGEFEA
456	1.00	0.95	101.91	95.38	20.10	90.48	4.21	10.00	4.00	EHGDGDFEA
457	1.00	0.95	101.91	70.00	20.02	84.96	3.78	10.00	4.00	EHGDGDFEA
458	1.00	0.95	122.16	39.30	20.02	74.71	2.61	10.00	4.00	EHGDGDFEA
459	1.00	0.95	123.69	8.70	20.05	77.77	1.18	10.00	4.00	EHGDGFFEA
460	1.00	0.95	117.73	98.86	20.02	79.89	2.42	10.00	4.00	EHGDFFRAA
461	1.00	0.95	127.18	98.00	20.05	80.57	3.08	10.00	4.00	EHGDFFRAA
462	1.00	0.95	62.78	97.17	20.09	80.07	4.45	10.00	4.00	EHGDFFRAA
463	1.00	0.95	35.99	96.39	20.12	80.23	2.54	10.00	4.00	EHGDFFRAA
464	1.00	0.31	113.26	95.62	20.15	87.31	10.75	10.00	4.00	EHGEFERBA
465	1.00	0.31	113.26	94.85	20.17	80.82	3.12	10.00	4.00	EHGEFERBA
466	1.00	0.31	59.13	94.09	20.20	79.25	3.43	10.00	4.00	EHGEFERBA
467	1.00	0.31	59.13	93.34	20.24	78.27	4.27	10.00	4.00	EHGEFERBA
468	1.00	0.31	35.51	92.63	20.27	78.59	14.48	10.00	4.00	EHGEFERBA
469	1.00	0.32	35.51	91.88	20.31	77.54	2.76	10.00	4.00	EHGEFERBA
470	1.00	0.63	118.52	91.16	20.34	76.22	2.12	10.00	4.00	EHGFFFRAZ
471	1.00	0.63	61.37	90.50	20.38	76.72	2.50	10.00	4.00	EHGFFFRAA
472	1.00	0.63	35.27	89.87	20.41	76.26	2.29	10.00	4.00	EHGFFFRAA
473	1.00	0.63	114.08	89.22	20.45	76.47	2.32	10.00	4.00	EHGFFFRAA
474	1.00	0.63	59.01	88.60	20.48	76.27	2.81	10.00	4.00	EHGFFFRAA
475	1.00	0.63	34.61	87.86	20.52	75.79	4.14	10.00	4.00	EHGFFFRAA
476	1.00	0.63	116.93	70.00	20.02	75.76	2.71	10.00	4.00	EHGFFFRAA
477	1.00	0.63	122.80	39.30	20.02	71.53	2.04	10.00	4.00	EHGFFERAA
478	1.00	0.63	123.43	8.70	20.04	84.44	1.74	10.00	4.00	EHGFFERAA
479	1.00	0.95	123.43	20.00	20.00	98.81	3.73	10.00	4.00	EHGDFERAA
480	1.00	0.95	59.47	19.86	20.01	94.44	0.47	10.00	4.00	EHGDFERAA
481	1.00	0.95	34.03	19.73	20.02	90.58	3.01	10.00	4.00	EHGDFERAA
482	1.00	0.95	123.05	19.56	20.03	98.26	5.14	10.00	4.00	EHGDFERAA
483	1.00	0.95	59.92	19.37	20.03	97.78	1.29	10.00	4.00	EHGDFERAA
484	1.00	0.95	33.86	19.20	20.04	94.03	2.58	10.00	4.00	EHGDFERAA
485	1.00	0.95	122.80	40.00	20.00	98.69	2.26	10.00	4.00	EHGDFERAA
486	1.00	0.95	60.48	39.80	20.00	99.12	1.56	10.00	4.00	EHGDFERAA
487	1.00	0.95	34.45	39.57	20.00	101.29	2.74	10.00	4.00	EHGDFERAA
488	1.00	0.95	123.18	39.35	20.00	101.94	2.90	10.00	4.00	EHGDFERAA
489	1.00	0.95	60.37	39.11	20.03	72.99	3.39	10.00	4.00	EHGDFERAA
490	1.00	0.95	34.45	38.76	20.08	73.21	8.88	10.00	4.00	EHGDFERAA
491	1.00	0.95	123.31	60.00	20.00	97.51	3.60	10.00	4.00	EHGDFERAA
492	1.00	0.95	61.04	59.57	20.01	97.74	3.58	10.00	4.00	EHGDFERAA
493	1.00	0.95	34.78	59.16	20.01	97.87	4.64	10.00	4.00	EHGDFERAA
494	1.00	0.95	123.31	58.79	20.01	98.44	6.41	10.00	4.00	EHGDFERAA
495	1.00	0.95	61.15	58.42	20.01	98.44	6.25	10.00	4.00	EHGDFERAA
496	1.00	0.95	34.61	58.01	20.01	98.51	7.36	10.00	4.00	EHGDFERAA
497	1.00	0.95	123.56	80.00	20.01	91.92	3.25	10.00	4.00	EHGDDERAA
498	1.00	0.95	61.04	79.42	20.02	92.04	1.70	10.00	4.00	EHGDDERAA
499	1.00	0.95	34.86	78.88	20.03	91.79	1.22	10.00	4.00	EHGDDERAA
500	1.00	0.95	124.07	78.37	20.04	93.30	1.51	10.00	4.00	EHGDDERAA
501	1.00	0.95	61.37	77.85	20.05	92.05	1.62	10.00	4.00	EHGDDERAA
502	1.00	0.95	35.03	77.34	20.06	92.56	0.98	10.00	4.00	EHGDDERAA
503	1.00	0.95	123.43	98.86	20.01	92.33	2.76	10.00	4.00	EHGDFERAA
504	1.00	0.95	61.70	98.13	20.02	92.24	2.65	10.00	4.00	EHGDFERAA
505	1.00	0.95	35.43	97.41	20.03	91.72	2.66	10.00	4.00	EHGDFERAA
506	1.00	0.95	123.43	96.73	20.04	93.19	2.86	10.00	4.00	EHGDFERAA
507	1.00	0.95	61.26	95.98	20.05	92.77	2.58	10.00	4.00	EHGDDERAA
508	1.00	0.95	35.43	95.24	20.06	91.83	4.73	10.00	4.00	EHGDDERAA
509	1.00	0.95	121.52	94.86	20.85	87.78	4.01	10.00	4.00	EHGDDERBA

510	1.00	0.95	61.26	94.18	20.87	89.52	4.35	10.00	4.00	EHGDDERBA
511	1.00	0.95	35.27	93.49	20.89	89.59	4.61	10.00	4.00	EHGDDERBA
512	1.00	0.95	121.90	92.86	20.90	89.41	3.79	10.00	4.00	EHGDDERBA
513	1.00	0.95	61.48	92.25	20.92	88.91	5.85	10.00	4.00	EHGDDERBA
514	1.00	0.95	35.35	91.58	20.93	89.53	4.43	10.00	4.00	EHGDDERBA
515	1.00	1.59	122.54	98.86	20.01	92.24	2.95	10.00	4.00	EHGCDERDA
516	1.00	1.59	61.26	98.20	20.02	93.04	4.50	10.00	4.00	EHGCDERDA
517	1.00	1.59	35.51	97.55	20.02	92.66	5.00	10.00	4.00	EHGCDERDA
518	1.00	1.59	124.94	96.86	20.03	93.23	3.56	10.00	4.00	EHGCDERDA
519	1.00	1.59	62.46	96.21	20.04	92.15	4.78	10.00	4.00	EHGCDERDA
520	1.00	1.59	35.99	95.60	20.05	92.55	5.55	10.00	4.00	EHGCDERDA
521	1.00	2.54	128.40	96.86	20.01	87.90	3.55	10.00	4.00	EHGGDERGA
522	1.00	2.54	63.21	96.16	20.03	89.87	3.40	10.00	4.00	EHGGDERGA
523	1.00	2.54	36.15	95.43	20.04	88.36	3.63	10.00	4.00	EHGGDERGA
524	1.00	2.54	128.77	94.72	20.06	88.88	6.88	10.00	4.00	EHGGDERGA
525	1.00	2.54	63.31	94.04	20.08	89.30	4.15	10.00	4.00	EHGGDERGA
526	1.00	2.54	35.91	93.27	20.10	88.85	4.68	10.00	4.00	EHGGDERGA
527	1.00	2.54	124.57	96.86	20.01	88.43	4.49	10.00	4.00	EHGGDERHA
528	1.00	2.54	62.24	96.16	20.03	89.41	3.59	10.00	4.00	EHGGDERHA
529	1.00	2.54	35.99	95.46	20.04	86.81	3.57	10.00	4.00	EHGGDERHA
530	1.00	2.54	125.32	94.73	20.06	89.44	4.79	10.00	4.00	EHGGDERHA
531	1.00	2.54	62.24	93.96	20.08	89.98	4.19	10.00	4.00	EHGGDERHA
532	1.00	2.54	35.67	93.26	20.10	86.32	5.65	10.00	4.00	EHGGDERHA
533	1.00	2.54	128.77	96.86	20.01	89.60	9.74	10.00	4.00	EHGGDERPA
534	1.00	2.54	63.31	96.12	20.03	89.71	5.29	10.00	4.00	EHGGDERPA
535	1.00	2.54	35.67	95.44	20.04	81.53	9.08	10.00	4.00	EHGGDERPA
536	1.00	2.54	129.61	94.79	20.06	90.24	6.32	10.00	4.00	EHGGDERPA
537	1.00	2.54	63.10	94.15	20.08	90.74	2.30	10.00	4.00	EHGGDERPA
538	1.00	2.54	35.67	93.60	20.09	89.44	5.10	10.00	4.00	EHGGDERPA
539	1.00	2.54	125.94	98.86	20.01	89.53	5.80	10.00	4.00	EHGGDERAA
540	1.00	2.54	62.78	98.22	20.02	90.16	7.58	10.00	4.00	EHGGDERAA
541	1.00	2.54	39.85	97.59	20.04	77.94	6.78	10.00	4.00	EHGGDERAA
542	1.00	2.54	123.56	96.96	20.06	90.34	6.14	10.00	4.00	EHGGDERAA
543	1.00	2.54	62.99	96.30	20.08	91.15	5.31	10.00	4.00	EHGGDERAA
544	1.00	2.54	35.91	95.66	20.09	82.44	4.93	10.00	4.00	EHGGDERAA
545	1.00	2.54	129.98	98.86	20.01	88.66	3.94	10.00	4.00	EHGGDERBA
546	1.00	2.54	63.85	98.19	20.02	88.62	6.17	10.00	4.00	EHGGDERBA
547	1.00	2.54	35.99	97.54	20.06	69.83	5.58	10.00	4.00	EHGGDERBA
548	1.00	2.54	130.82	96.82	20.08	90.16	3.91	10.00	4.00	EHGGDERBA
549	1.00	2.54	63.85	96.15	20.10	89.12	7.05	10.00	4.00	EHGGDERBA
550	1.00	2.54	36.07	95.49	20.13	73.08	6.34	10.00	4.00	EHGGDERBA
551	1.00	0.95	63.31	98.86	20.01	88.49	4.32	10.00	4.00	EHGDDERAZ
552	1.00	0.95	63.31	98.20	20.02	90.65	5.57	10.00	4.00	EHGDDERAZ
553	1.00	1.59	63.31	97.59	20.03	89.91	5.54	10.00	4.00	EHGDDERAZ
554	1.00	1.59	63.31	96.98	20.05	90.70	7.05	10.00	4.00	EHGDDERAZ
555	1.00	2.54	62.78	96.32	20.07	86.55	6.65	10.00	4.00	EHGDDERAZ
556	1.00	2.54	62.78	95.56	20.09	85.81	4.46	10.00	4.00	EHGDDERAZ
557	1.00	0.63	62.78	94.84	20.11	88.89	5.33	10.00	4.00	EHGDDERAZ
558	1.00	0.63	62.67	94.18	20.12	89.90	5.06	10.00	4.00	EHGDDERAZ
559	1.00	0.00	125.56	98.86	20.01	91.57	10.59	10.00	4.00	EHGADESAA
560	1.00	0.00	60.16	98.13	20.02	92.45	9.97	10.00	4.00	EHGADESAA
561	1.00	0.00	34.48	97.48	20.03	90.12	7.07	10.00	4.00	EHGADESAA
562	1.00	0.00	131.45	96.80	20.04	92.21	4.87	10.00	4.00	EHGADESAA
563	1.00	0.00	57.27	96.16	20.05	91.71	9.79	10.00	4.00	EHGADESAA
564	1.00	0.00	34.81	95.49	20.07	92.08	10.43	10.00	4.00	EHGADESAA
565	1.00	0.00	125.04	98.86	20.01	91.49	5.65	10.00	4.00	EHGAPESAA
566	1.00	0.00	64.74	98.05	20.02	94.89	13.29	10.00	4.00	EHGAPESAA
567	1.00	0.00	36.07	97.19	20.03	91.26	2.36	10.00	4.00	EHGAPESAA

568	1.00	0.00	125.04	96.42	20.05	95.44	14.57	10.00	4.00	EHGAPESAA
569	1.00	0.00	64.74	95.62	20.05	92.94	9.11	10.00	4.00	EHGAPESAA
570	1.00	0.00	36.07	94.85	20.07	91.33	3.54	10.00	4.00	EHGAPESAA
571	1.00	0.00	125.04	98.86	20.01	92.10	13.85	10.00	4.00	EHGAPESBA
572	1.00	0.00	64.63	98.12	20.02	92.80	12.49	10.00	4.00	EHGAPESBA
573	1.00	0.00	36.07	97.31	20.03	90.92	14.36	10.00	4.00	EHGAPESBA
574	1.00	0.00	124.36	96.58	20.05	93.33	11.04	10.00	4.00	EHGAPESBA
575	1.00	0.00	64.52	95.82	20.06	93.20	10.40	10.00	4.00	EHGAPESBA
576	1.00	0.00	36.07	95.07	20.07	89.02	10.83	10.00	4.00	EHGAPESBA
577	1.00	0.00	124.36	98.86	20.01	93.08	12.16	10.00	4.00	EHGAPESPA
578	1.00	0.00	64.74	98.09	20.02	94.10	14.79	10.00	4.00	EHGAPESPA
579	1.00	0.00	36.07	97.35	20.03	93.24	11.65	10.00	4.00	EHGAPESPA
580	1.00	0.00	124.36	96.63	20.04	93.71	11.63	10.00	4.00	EHGAPESPA
581	1.00	0.00	64.74	95.92	20.05	93.49	9.76	10.00	4.00	EHGAPESPA
582	1.00	0.00	36.07	95.18	20.06	92.71	8.27	10.00	4.00	EHGAPESPA
583	1.00	0.00	123.67	98.86	20.01	90.96	13.85	10.00	4.00	EHGAQESAA
584	1.00	0.00	64.97	98.13	20.02	93.14	10.93	10.00	4.00	EHGAQESAA
585	1.00	0.00	36.07	97.41	20.03	90.03	12.42	10.00	4.00	EHGAQESAA
586	1.00	0.00	124.36	96.65	20.05	93.92	12.63	10.00	4.00	EHGAQESAA
587	1.00	0.00	64.74	95.87	20.06	91.40	9.28	10.00	4.00	EHGAQESAA
588	1.00	0.00	36.07	95.12	20.07	89.76	11.08	10.00	4.00	EHGAQESAA
589	1.37	0.00	125.04	98.86	20.01	85.51	4.46	10.00	4.00	EHGAPESAC
590	1.37	0.00	65.52	98.15	20.03	84.90	3.77	10.00	4.00	EHGAPESAC
591	1.37	0.00	36.86	97.46	20.04	97.13	4.28	10.00	4.00	EHGAPESAC
592	1.37	0.00	124.36	96.82	20.05	98.03	3.33	10.00	4.00	EHGAPESAC
593	1.37	0.00	65.52	96.18	20.05	97.54	4.86	10.00	4.00	EHGAPESAC
594	1.37	0.00	36.86	95.59	20.05	95.78	1.94	10.00	4.00	EHGAPESAC
595	1.37	0.00	124.36	95.00	20.06	97.92	3.18	10.00	4.00	EHGAPESPC
596	1.37	0.00	65.52	94.42	20.06	98.77	13.40	10.00	4.00	EHGAPESPC
597	1.37	0.00	36.86	93.84	20.06	96.83	5.23	10.00	4.00	EHGAPESPC
598	1.37	0.00	124.36	93.26	20.07	96.68	4.23	10.00	4.00	EHGAPESPC
599	1.37	0.00	65.52	92.69	20.07	95.88	2.90	10.00	4.00	EHGAPESPC
600	1.37	0.00	36.86	92.12	20.08	95.87	2.34	10.00	4.00	EHGAPESPC
601	1.40	0.00	124.36	91.50	20.08	98.19	2.70	10.00	4.00	EHGAPESPC
602	1.40	0.00	65.52	90.95	20.08	97.94	3.02	10.00	4.00	EHGAPESPC
603	1.40	0.00	36.86	90.41	20.08	100.38	6.54	10.00	4.00	EHGAPESPC
604	1.40	0.00	175.63	89.97	20.08	98.48	3.77	10.00	4.00	EHGAPESPC
605	1.40	1.59	125.94	89.50	20.09	95.77	2.07	10.00	4.00	EHGADERPC
606	1.40	1.59	64.37	89.05	20.09	98.47	5.17	10.00	4.00	EHGCDERPC
607	1.40	1.59	37.25	88.61	20.09	96.81	2.52	10.00	4.00	EHGADERPC
608	1.40	1.59	127.42	88.17	20.10	96.26	1.22	10.00	4.00	EHGADERAC
609	1.40	1.59	64.58	87.74	20.10	98.36	2.86	10.00	4.00	EHGADERAC
610	1.40	1.59	37.25	87.29	20.10	97.59	3.36	10.00	4.00	EHGADERAC
611	1.32	1.59	37.55	98.86	20.00	93.75	3.70	10.00	4.00	EHGADERAC
612	1.32	1.59	64.69	98.17	20.01	95.22	3.34	10.00	4.00	EHGADERAC
613	1.32	1.59	102.96	97.50	20.02	95.24	3.31	10.00	4.00	EHGADERAC
614	1.33	1.59	37.63	96.88	20.03	95.02	3.47	10.00	4.00	EHGADERAC
615	1.33	1.59	65.51	96.26	20.03	95.19	5.73	10.00	4.00	EHGADERAC
616	1.33	1.59	105.31	95.64	20.04	97.26	5.16	10.00	4.00	EHGADERAC
617	1.00	0.00	118.00	98.86	20.02	74.92	19.08	10.00	4.00	EHGAPESPA
618	1.00	0.00	59.24	98.26	20.05	63.72	15.94	10.00	4.00	EHGAPESPA
619	1.00	0.00	59.24	97.77	20.08	68.07	11.42	10.00	4.00	EHGAPESPA
620	1.00	0.00	36.86	97.31	20.12	59.66	21.82	10.00	4.00	EHGAPESPA
621	1.00	0.00	118.00	96.87	20.15	61.81	15.90	10.00	4.00	EHGAPESPA
622	1.00	0.00	36.86	96.45	20.18	63.19	11.23	10.00	4.00	EHGAPESPA
623	1.00	0.00	59.47	98.86	20.01	77.99	15.16	10.00	4.00	EHGAPESPA
624	1.00	0.00	35.11	98.17	20.05	72.20	15.03	10.00	4.00	EHGAPESPA
625	1.00	0.00	60.03	97.52	20.09	74.45	15.02	10.00	4.00	EHGAPESPA

626	1.00	0.00	35.67	96.79	20.13	72.59	12.81	10.00	4.00	EHGAPESPA
627	1.00	0.00	59.47	98.86	20.01	93.11	9.22	10.00	4.00	EHGAPESAA
628	1.00	0.00	35.59	98.18	20.02	93.14	16.83	10.00	4.00	EHGAPESAA
629	1.00	0.00	59.47	97.53	20.02	92.67	6.45	10.00	4.00	EHGAPESAA
630	1.00	0.00	35.59	96.88	20.04	90.30	6.79	10.00	4.00	EHGAPESAA
631	1.00	0.00	59.81	98.86	20.01	91.08	7.89	10.00	4.00	EHGAPESAA
632	1.00	0.00	35.59	98.17	20.02	88.30	1.61	10.00	4.00	EHGAPESAA
633	1.00	0.00	60.03	97.45	20.04	91.04	6.25	10.00	4.00	EHGAPESAA
634	1.00	0.00	35.59	96.79	20.05	86.79	5.00	10.00	4.00	EHGAPESAA
635	1.00	0.00	59.81	98.86	20.01	88.86	5.29	10.00	4.00	EHGAPESAZ
636	1.00	0.00	35.51	98.22	20.02	87.17	2.61	10.00	4.00	EHGAPESAZ
637	1.00	0.00	59.47	97.55	20.04	90.25	5.80	10.00	4.00	EHGAPESAZ
638	1.00	0.00	35.51	96.89	20.06	86.00	1.97	10.00	4.00	EHGAPESAZ
639	1.00	0.00	59.81	98.86	20.01	87.94	1.87	10.00	4.00	EHGAPESAZ
640	1.00	0.00	35.43	98.13	20.03	89.27	3.30	10.00	4.00	EHGAPESAZ
641	1.00	0.00	59.47	97.44	20.04	90.98	3.19	10.00	4.00	EHGAPESAZ
642	1.00	0.00	35.43	96.75	20.05	88.31	2.81	10.00	4.00	EHGAPESAZ
643	1.00	0.00	91.61	96.02	20.07	91.50	1.52	10.00	4.00	EHGAPESAZ
644	1.00	0.00	91.61	95.25	20.08	91.17	2.17	10.00	4.00	EHGAPESAZ

CODE DEFINITIONS

1E---TRI AIR SUPPLY,TUNGSTEN(100%<88 MICRONS), TALL TANK.
2H---FLAT TANK BOTTOM WITH NO SOAP.
3G---NO WIRES IN TANK.
4D--- 3/8" SPACER ON LIFT TUBE.
4C--- 5/8" SPACER ON LIFT TUBE.
4E--- 1/8" SPACER ON LIFT TUBE.
4F---1/4" SPACER ON LIFT TUBE.
4G---1" SPACER ON LIFT TUBE.
4A---NO SPACER ON LIFT TUBE.
5D---3/8" OD TAPERED AIR LINE WITH 1/16" DIA. HOLE.
5E--- 3/8" OD TAPERED AIR LINE WITH 1/16" DIA. HOLE TURNED 10 DEG. FROM CENTER.
5F--- 3/8" OD TAPERED AIR LINE WITH 1/16" DIA. HOLE TURNED 55 DEG. FROM CENTER.
5G---3/8" OD TAPERED AIR LINE WITH 1/16" DIA. HOLE TURNED 58-60 DEG. FROM CENTER
5P---3/8" OD TAPERED AIR LINE WITH 1/16" DIA. HOLETURNED 51 DEG. FROM CENTER.
5Q---3/8" OD TAPERED AIR LINE WITH 1/16" DIA. HOLETURNED 29.8 DEG. FROM CENTER.
6F---SAMPLES TAKEN AT RANDOM.
6E---SAMPLES TAKEN AT BEGINNING OF PULSE CYCLE.
6D---SAMPLES TAKEN AT BEGINNING OF VENT CYCLE.
7F---3" OD LIFT TUBE,1" SCH40 SUCTION LINE.
7R---3" OD LIFT TUBE,3/4" SCH40 SUCTION LINE.
7S---2" SST SCH40 LIFT TUBE; 3/4" SCH40 SUCTION LINE.
8A---AIR LINES 1/4" BELOW LIFT TUBE.
8D---AIR LINES 1/2" BELOW LIFT TUBE.
8E---2 AIR LINES 1/4",AND 1 LINE 3/16" BELOW LIFT TUBE.
8B---AIR LINES 1/8" BELOW LIFT TUBE.
8G---AIR LINES 7/8" BELOW LIFT TUBE.
8H---AIR LINES 5/8" BELOW LIFT TUBE.
8P---AIR LINES 3/8" BELOW LIFT TUBE.
9A---PERTINENT DATA COMPLETE IN CODES.
9Z---PERTINENT DATA INCOMPLETE IN CODES; SEE DIGESTER LOG BOOK.
9C---RUN MADE WITH CALCIUM NITRATE SOLUTION IN TANK.

ORNL/TM-9886
Dist. Category UC-86T
(Applied)

INTERNAL DISTRIBUTION

1. J. T. Bell
2. J. F. Birdwell
3. J. O. Blomeke
4–6. W. D. Burch
7. R. H. Chapman
8. F. T. Chattin
9. D. A. Costanzo
10. R. M. Counce
11. S. F. DeMuth
12. R. D. Ehrlich
13. M. J. Feldman
14. R. W. Glass
15. W. S. Groenier
16. R. T. Jubin
17. M. V. Keigan
18. H. T. Kerr
19. E. H. Krieg, Jr.
20. R. E. Leuze
21–25. B. E. Lewis
26. J. C. Mailen
27. S. A. Meacham
28. J. G. Morgan
29. D. R. Moser
30. F. L. Peishel
31. J. H. Shaffer
32–34. R. W. Sharpe
35. G. E. Smith
36. B. B. Spencer
37. J. G. Stradley
38. P. Welesko
39. O. O. Yarbro
40. H. R. Yook
41–42. Laboratory Records
43. Laboratory Records, ORNL-RC
44. ORNL Patent Section

EXTERNAL DISTRIBUTION

45. D. E. Bailey, Director, Division of Fuels and Reprocessing, Office of Facilities, Fuel Cycle, and Test Programs, U.S. Department of Energy, Washington, DC 20545
46. F. P. Baranowski, 1110 Dapple Grey Court, Great Falls, VA 22066
47. S. J. Beard, Vice President, Marketing and Uranium Operations, Exxon Nuclear Company, Inc., 600 108th Avenue, N.E., C-00777, Bellevue, WA 98009
48. M. J. Ohanian, Associate Dean for Research, College of Engineering, 300 Weil Hall, University of Florida, Gainesville, FL 32611
49. J. F. Proctor, Senior Technical Specialist, E. I. du Pont de Nemours and Company, Savannah River Laboratory, Aiken, SC 29801
50. Office of Assistant Manager for Energy Research and Development, DOE-ORO, Oak Ridge, TN 37831

51–96. Given distribution as shown in TIC-4500 under UC-86T, Consolidated Fuel Reprocessing Category