MARTIN MARIETTA ENERGY SYSTEMS LIBRARIES
3 4456 0167713 0

ORNL/TM-9866

ornl

OAK RIDGE
NATIONAL
LABORATORY

MARTIN MARIETTA

Space Power Using Solar Photovoltaic Panels: Costs and Limitations

K. A. Williams

OAK RIDGE NATIONAL LABORATORY
CENTRAL RESEARCH LIBRARY
CIRCULATION SECTION
4500N ROOM
LIBRARY LOAN COPY
DO NOT TRANSFER TO ANOTHER PERSON
If you wish someone else to see this report, send in name with report and the library will arrange a loan.

OPERATED BY
MARTIN MARIETTA ENERGY SYSTEMS, INC.
FOR THE UNITED STATES
DEPARTMENT OF ENERGY

Printed in the United States of America. Available from
National Technical Information Service
U.S. Department of Commerce
5285 Port Royal Road, Springfield, Virginia 22161
NTIS price codes: Printed Copy: A05 Microfiche: A01

This report was prepared as an account of work sponsored by an agency of the United States Government. Neither the United States Government nor any agency thereof, nor any of their employees, makes any warranty, express or implied, or assumes any legal liability or responsibility for the accuracy, completeness, or usefulness of any information, apparatus, product, or process disclosed, or represents that its use would not infringe privately owned rights. Reference herein to any specific commercial product, process, or service by trade name, trademark, manufacturer, or otherwise, does not necessarily constitute or imply its endorsement, recommendation, or favoring by the United States Government or any agency thereof. The views and opinions of authors expressed herein do not necessarily state or reflect those of the United States Government or any agency thereof.

ORNL/TM-9856

Engineering Technology Division

SPACE POWER USING SOLAR PHOTOVOLTAIC PANELS: COSTS AND LIMITATIONS

K. A. Williams

Date Published: March 1986

NOTICE: This document contains information of a preliminary nature. It is subject to revision or correction and therefore does not represent a final report.

Prepared by the
OAK RIDGE NATIONAL LABORATORY
Oak Ridge, Tennessee 37831
operated by
MARTIN MARIETTA ENERGY SYSTEMS, INC.
for the
U.S. DEPARTMENT OF ENERGY
under Contract No. DE-AC05-84OR21400

MARTIN MARIETTA ENERGY SYSTEMS LIBRARIES
3 4456 0167713 0

CONTENTS

Page

ABSTRACT 1

1. PURPOSE OF STUDY 1

1.1 Goals Related to Overall SDI Affordability Assessment Effort 1

1.2 Assessment Approach for SPP Technology 2

2. FIVE-STAGE LIFE-CYCLE COST CONSIDERATIONS IN SPACE POWER 3

3. SPACE POWER REQUIREMENTS AND FIGURES OF MERIT 4

3.1 Mission Power Requirements 4

3.2 Figures of Merit for Space Power 4

4. SOLAR PHOTOVOLTAIC PANELS: TECHNOLOGY DESCRIPTION, STATUS, DEVELOPMENT, AND COSTS 6

4.1 History 6

4.2 Technology Description 6

4.3 Solar Panel Costs 9

4.4 Advantages and Disadvantages of SPPs 9

4.4.1 Solar eclipses and the need for energy storage 10

4.5 References 11

5. ORBITAL AND LAUNCH CONSIDERATIONS 12

5.1 Orbit Classification 12

5.2 Launch Considerations 12

6. A DESIGN AND COST MODEL FOR SOLAR PHOTOVOLTAIC PANELS 13

6.1 Key Model Assumptions 13

6.2 Inputs and Outputs for the Code 14

6.3 Description of Code Algorithms: Solar Panel Design 14

6.4 Energy Storage System Requirements 20

6.5 Atmospheric Drag Considerations 21

6.6 Payload Considerations 22

6.7 The Cost Model 23

6.7.1 Power equipment manufacturing costs 24

6.7.2 Launch related costs 25

Page

6.8 Sample Model Output 26

6.9 References 31

7. RESULTS 32

7.1 Performance and Cost Data: A Literature Survey 32

7.2 Technology Assessment and Case Descriptions 32

7.2.1 Present SPP technology 36
7.2.2 Near-term advanced Si cell technology 40
7.2.3 Most advanced MBG technology 40

7.3 Some Comments on Economy of Scale 46

7.4 References 46

8. CONCLUSIONS 49

9. POSSIBLE FUTURE STUDIES 51

Appendix A. LIST OF ACRONYMS 53

Appendix B. CODE LISTING 55

Appendix C. PROJECTIONS OF RANGES FOR SATELLITE LAUNCH COSTS IN LOW AND GEOSYNCHRONOUS EARTH ORBIT 63

LIST OF FIGURES

Figure		Page
4.1	Proposed space station with solar panels deployed	7
4.2	Photovoltaic system electrical block diagram	8
6.1	Block diagram for SPS model	13
6.2	Solar array specific power after 10 years	18
7.1	Maximum space power satellite demand power load as a function of mission orbital altitude	43

LIST OF TABLES

Table		Page
4.1	Hardware figures of merit for solar photovoltaic panels in space applications	9
4.2	Advantages and disadvantages of SPPs for space applications	10
4.3	Some hardware figures of merit for energy storage devices	11
6.1	Input variables for solar power satellite code	15
6.2	Output variables for solar power satellite code	16
6.3	Sample LEO mission case	27
6.4	Sample HEO mission case	29
7.1	Literature SPP power system data	33
7.2	Performance and cost parameter ranges summarized from Table 7.1	36
7.3	Code results for SPS missions using present SPP and energy storage technology	37
7.4	Breakdown of space-qualified SPP power costs	39
7.5	Code results for SPS mission using near-term advanced SPP and energy storage technology	41
7.6	Code results for SPS missions using most advanced SPP and energy storage technology	44
C.1	Calculation of ranges for LEO and GEO launch costs	65
C.2	Some literature values for space shuttle launch costs	66

SPACE POWER USING SOLAR PHOTOVOLTAIC PANELS: COSTS AND LIMITATIONS

Kent A. Williams

ABSTRACT

Solar photovoltaic panels (SPPs) have been suggested as a possible prime space power source for multi-kilowatt applications within a ballistic missile defense (BMD) system. As a first step in an attempt to assess the affordability of possible BMD space power sources, the limitations and costs of space power satellites using SPPs in conjunction with an electrochemical energy storage system have been investigated. Both high and low earth orbital missions are considered. An extensive literature search was conducted to determine values for the principal technology-driven performance and cost figures of merit. A small computer code was then developed to evaluate the total power cost, including launch, in dollars per watt of desired space power load. The unit costs obtained were found to be heavily influenced by the nature of the mission (altitude) and the attainable specific power for the two major power system components.

---

1. PURPOSE OF STUDY

1.1 Goals Related to Overall SDI Affordability Assessment Effort

Assessment of the affordability of a ballistic missile defense (BMD) system is a difficult and immense task, especially because the overall architecture and technology of the system are not yet defined. An effort to assess strategic defense initiative (SDI) affordability must begin with small parts of the system which have some available conceptual data.

This document assesses one particular form of space power, that is, solar photovoltaic panels (SPPs). It also illustrates modeling and analytical techniques which are equally applicable to other proposed space power technologies such as solar dynamic, nuclear, and chemical.

This report is based on an extensive survey of the recent literature on SPPs and space power. Discussions with non-ORNL staff have been minimal and this report has not been reviewed by outside aerospace contractors or government agencies outside of Oak Ridge. It is intended as

a scoping study and not meant to calculate design requirements for a specific mission. The intent is to investigate the issues involved in the use of solar photovoltaic panels as a source of steady state space power in a dedicated, Space Shuttle deliverable power satellite which can service other military or civilian payloads.

1.2 Assessment Approach for SPP Technology

The space power technology considered in this report is limited to solar photovoltaic panels (and their accompanying energy storage system), which at present represent one of the two predominant sources of space power utilized by the U.S. military and civilian space programs. [The other mode is radioisotope thermoelectric generators (RTGs).] The technology tradeoffs and cost considerations for these photovoltaic systems will be discussed in the following manner.

1. Description of the requirements and general figures of merit for space power.
2. Discussion of the power limitation imposed on solar panels by launch, orbital, and energy storage considerations. A mathematical model will be used to elucidate these relationships.
3. Discussion of the technology and cost elements of importance. The model mentioned above will be used to calculate (a) costs, both total and per watt, of desired load and (b) performance in terms of watts per unit mass.

Because the intent is not to specify a particular power system design for a single mission, no attempt is made to optimize or baseline a particular design.

Most of the background material for this study has been extracted from unclassified literature. Most useful were the Aerospace Power papers from the Proceedings of the 13th through 20th Intersociety Energy Conversion Engineering Conferences (references listed in Section 7). Many of the 50-plus papers read dealt with the National Aeronautics and Space Administration's (NASA's) proposed space station, for which SPPs are one of the two power candidates for the 75 to 300 kW needed for the initial deployment; the other candidate is a solar dynamic system.

2. FIVE-STAGE LIFE-CYCLE COST CONSIDERATIONS IN SPACE POWER

In discussing affordability, it is necessary to consider the concept of life-cycle costs and designate which phases of the project life cycle are of principal interest. For space power systems deployed as a part of the SDI, the following designations would be appropriate:

1. Development — The period in which the technical feasibility of the system is established via hardware-design-oriented research and development. A prototype system, such as the ground-based reactor proposed for the SP-100 program, is often built to gain the experimental data needed for final design and engineering of the baseline system.
2. Engineering — The period in which the knowledge gained in the research and development (R&D) program is utilized to design the final producible and deployable system.
3. Deployment — The construction and/or production of the baseline system and the process of putting it in operation. For a space power system this phase would include capital equipment, qualification, and launching costs.
4. Operating and maintenance (O&M) — The period, usually several years, in which the system is maintained in a usable condition. Post-launch spacecraft servicing would be included here.
5. Decommissioning — The period in which a system is removed from service and salvaged or placed in disposal. For a spacecraft this step could entail burnup in the earth's atmosphere, insertion into a high earth orbit or orbit around the sun, or pickup by a space transfer vehicle.

Because the majority of the costs are incurred in the deployment phase, this phase will be the only one of concern here. For a Space power satellite (SPS) based on SPP technology, the deployment phase includes the manufacturing costs for the power spacecraft, including the solar panels, energy storage, and power conditioning equipment. Qualification of this equipment for space use includes the special reliability testing required prior to launch. The cost of launching the spacecraft into the desired earth orbit is also considered a deployment cost.

If it becomes necessary to periodically service the spacecraft in orbit, the costs involved are considered O&M costs. In this study it is assumed that no post-launch maintenance is needed and that any additional propellant required over the lifetime of the spacecraft is carried during the initial launch.

3. SPACE POWER REQUIREMENTS AND FIGURES OF MERIT

3.1 Mission Power Requirements

Future space missions, both military and civilian, will require prime or steady state power levels significantly higher than available today. Missions in the last several years, such as Skylab, have required power levels on the order of 1 to 12 kW(e). Present military satellites use up to 10 kW. The latest civilian space initiative, NASA's Space Station, will require 75 to 300 kW(e). Other civilian applications requiring such high power levels are direct broadcast satellites and air-traffic-control radar. Military missions, including those related to a ballistic missile defense system, will need steady state power levels in the hundreds of kilowatts and multi-megawatt levels.

The predominant near-earth space power sources at present and in the near future are solar photovoltaic panels/electrochemical energy storage and radioisotope thermoelectric generators (RTGs) for earth orbit applications. For deep space (far from the sun) interplanetary missions, such as Viking, Voyager, and Galileo, the RTG is the only available technology. Since the Space Station, scheduled for 1994 deployment, will be in a low earth orbit (LEO), a solar photovoltaic power system is considered the lowest risk of the two technology options considered for the initial 75-kW power system. The possibilities for utilizing solar photovoltaic panels for even higher power (hundreds of kilowatts) earth orbital missions are the subject of this report.

It should be noted that SDI short duration or burst power requirements are not considered here. Burst power requirements are on the order of megawatts. A special energy storage system will be required for missions utilizing burst power.

3.2 Figures of Merit for Space Power

Because earth to LEO launch costs are high (over $2000 per kilogram) and the allowable bay space and payload mass in the space shuttle orbiter are limited, it is necessary to aim for the largest overall steady state specific power possible. This specific power, usually expressed in demand load electrical watts/kilogram, applies to the entire power system payload mass, including the power production, energy storage, and power conditioning systems. (Demand power represents the desired, nameplate, or base-load power available on a continuous, uninterruptible basis.) It is not surprising, therefore, that most R&D in the area of space power has as its goal the maximization of this figure of merit. It is also desirable that the entire power spacecraft, referred to in this report as an SPS, be transportable in the bay of the shuttle orbiter, where a maximum payload mass limit of ~26,000 kg is permitted for orbits with small inclination to the equator.

Geometrical limitations also apply because the maximum allowable payload diameter and length in the shuttle cargo bay are ~4.3 and 18.2 m, respectively. It is important to note that the desired or nameplate power requirement is a steady state, not peak, demand power available over the duration of the mission, even at the end of life (EOL). The actual power-producing elements, in this case solar photovoltaic panels, must be designed for a peak power level above the average load level to compensate for solar occultations (periods of darkness) and solar cell performance degradation because of radiation. Energy storage must be provided for these periods of darkness.

Along with maximizing specific power, the cost per demand watt of power deployed should also be minimized. This overall figure of merit should include the power spacecraft manufacturing and qualification (i.e., capital) costs, the launch costs, and the initial cost of any fuel or propellant required to keep the spacecraft operating during the duration of its mission.

As will be shown in the next chapter, the performance and cost figures of merit for space power depend strongly on particular hardware figures of merit for the energy conversion technology utilized, in this case the solar panels and their accompanying electrochemical energy storage system. State-of-the-art values and future projected values for these technology parameters are available in the literature and are discussed in Sect. 7. It should also be noted that the orbital nature of the mission and launch considerations are equally important determinants of performance and cost.

4. SOLAR PHOTOVOLTAIC PANELS: TECHNOLOGY DESCRIPTION, STATUS, DEVELOPMENT, AND COSTS

4.1 History

Solar photovoltaic panels have been used in the U.S. space program from its first earth satellite (Explorer, 1958) to the present. For many low power, LEO applications, they have proven to be a very reliable, hence low risk, power source. They are also extensively used for communication and military satellites in high geosynchronous earth orbits (GEO).

Terrestrial applications of SPPs since 1960 have included the production of small amounts of electricity in remote areas, such as for boosting telephone line signals. In the early 1970s, considerable interest in the large scale use of solar energy for electrical power generation resulted in a significant increase in R&D on solar cell production techniques. In the early 1980s, a small [1-MW(e)] power plant using several acres of photovoltaic panels was constructed in California and presently sells power to the local utility grid.

4.2 Technology Description

Solar photovoltaic panels consist of arrays of individual photoelectric cells mounted on a flat blanket and frame structure incident to the sun's rays. Figure 4.1 shows a conceptual spacecraft (a Rocketdyne concept[1] for NASA's proposed space station) with its wing-like solar panels deployed. The individual cells are interconnected electrically in tandem with the power conditioning system and energy storage system such that the desired output voltages and current can be produced. Figure 4.2 shows an electrical block diagram for an SPP system as configured by TRW Corporation.[2] It should be noted that the peak power available from a solar panel can exceed the demand power level, but only during periods of solar exposure. The excess power is used to recharge the electrochemical energy storage system. Current solar cells are constructed of silicon doped with other light elements such that a photoelectric effect is induced by visible light striking the semiconductor surface. Each cell is very thin (<1 mm) and has a light-incident area in the tens of square centimeters. This frontal area per cell is limited by the size and rate at which high-purity silicon crystals can be manufactured.

Solid-state physics and quantum considerations limit the theoretical efficiency (electrical energy to incident light energy ratio) to a value on the order of 18% for silicon. Other losses result in an achieved efficiency of 10 to 14% for individual cells and 7 to 11% for actual arrays of silicon solar cells. An advantage, however, is the fact that photocells are direct conversion devices, that is, no heat engine or mechanical generator is required to produce the electrical

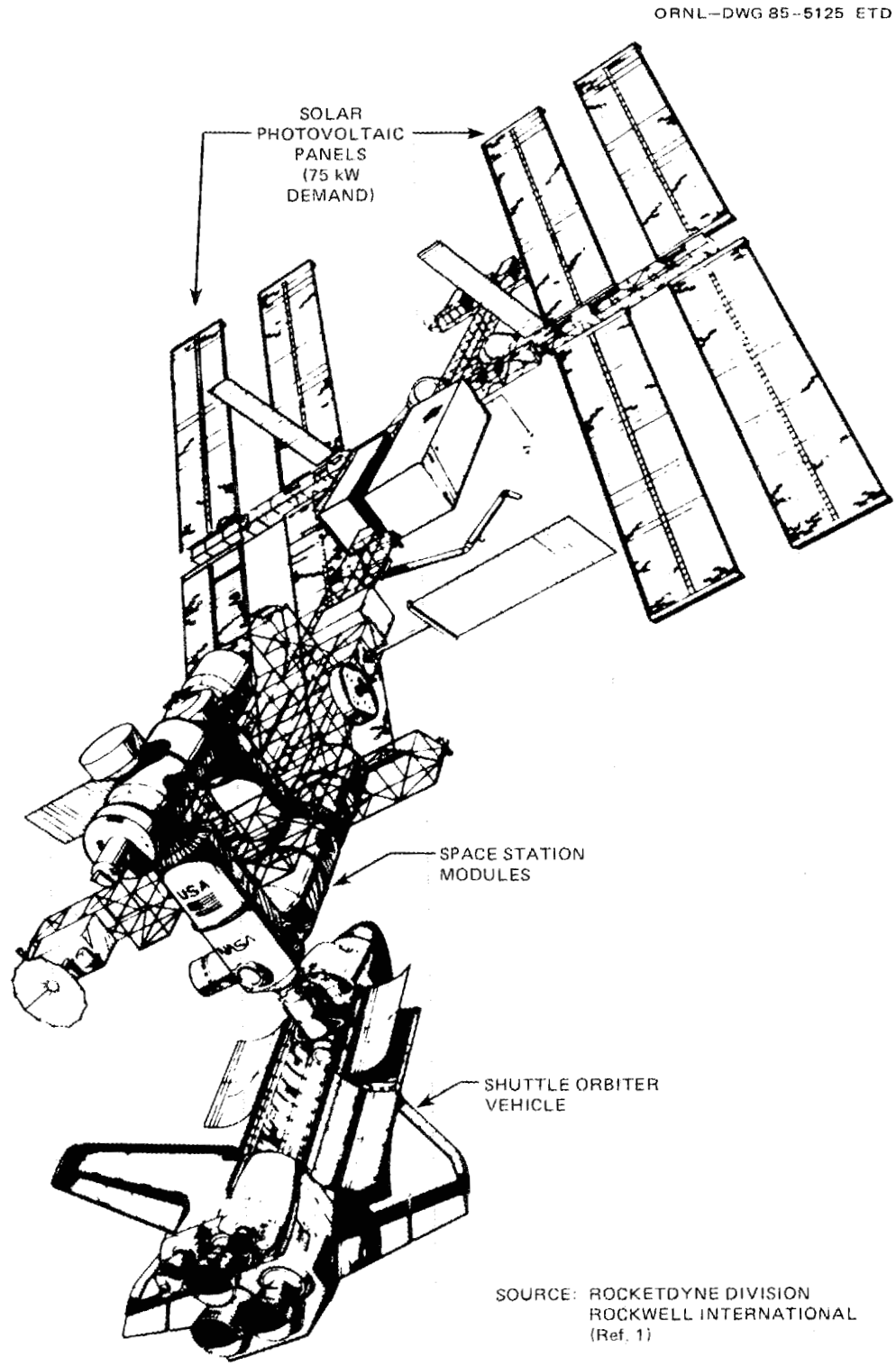

Fig. 4.1. Proposed space station with solar panels deployed.

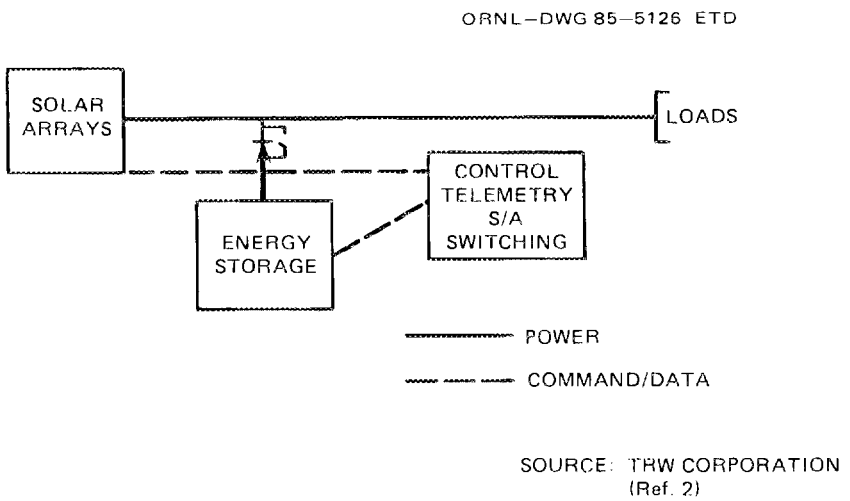

Fig. 4.2. Photovoltaic system electrical block diagram.

power. The heat rejection problem is also greatly simplified because the large SPP backface area allows for radiant heat transfer.

Two important hardware figures of merit for solar photovoltaic panels are the specific power (in relation to the overall panel mass and the panel output peak power) and the areal power density (peak power per square meter of panel). Table 4.1 shows values of these figures of merit for present silicon-cell-based arrays and projections for solar cell technologies based on advanced materials. As these values increase, a power spacecraft utilizing the improved design would be able to provide more demand power per kilogram of dedicated payload; in other words, the overall power density would improve. The improvements necessary to increase the panel specific power and the areal density of solar panels center on increasing cell efficiency and reducing the weight per unit area of the overall panel structure. The production of thinner cells and substrates is one method of accomplishing the latter.

Advanced concepts for solar photovoltaic panels include the use of a different semiconductor, the most promising candidate being gallium arsenide (Ga-As). Optical enhancers such as Fresnel or Cassegrainian lenses can be used to concentrate sunlight on such cells and further increase their efficiency and output. Considerable research is under way on such Ga-As "concentrator" cells. Another advanced concept, called the multi-bandgap (MBG) approach, involves the stacking of thin solar cells such that a higher percentage of the solar frequency spectrum is used. Table 4.1 also shows some figure-of-merit projections for these advanced photovoltaic options.

Table 4.1. Hardware figures of merit for solar photovoltaic panels in space applications

Solar cell type	Panel specific power (W/kg)	Panel areal power density (W/m^2)	Cell efficiency (%)
Silicon (Si) (present technology)	50	105	11 to 14
Gallium-arsenide (Ga-As) concentrator cells (projections)	35 to 66	160 to 200	16 to 21
MBG (projections)	106 to 300	160 to 300	20 to 30

4.3 Solar Panel Costs

In the area of solar panel economics, costs are often expressed in dollars per watt of peak power produced (prior to power conditioning). An extensive search of the literature on solar panel costs indicates a wide variation, that is, from a few dollars per watt to a few hundred dollars per watt. The difference depends on the type of application and the extent to which all costs are included. Solar photovoltaic panels for terrestrial electricity production use have been produced for as low as $5.50 per peak watt. This cost does not include the sun-following mechanism needed for utility applications; that tracking device adds approximately $3.50/W to the panel costs. SPPs for space application vary from $300 to $1200/W. (The manufacturing cost per watt for the solar cell alone is an order of magnitude smaller.) The high cost for space SPPs can be attributed to the costlier manufacturing and qualification procedures needed for highest possible efficiency and reliability. The number of panels produced for a particular space application is also much smaller than the number required for a terrestrial application such as a power plant. This economy-of-scale problem in SPP manufacturing is discussed in a later section. It should be noted that these space SPP costs per peak watt do not include energy storage, power conditioning, or launch costs, all discussed in Sects. 6 and 7.

4.4 Advantages and Disadvantages of SPPs

Table 4.2 shows a listing of the major advantages and disadvantages of SPPs for spacecraft power applications. The major ones that have not been already discussed will be mentioned below.

Table 4.2. Advantages and disadvantages of SPPs for space applications

Advantages
Low-risk technology/proven reliability
No safety problems related to radioactivity (shielding, re-entry)
No moving parts (no heat engine required)
Minimal heat rejection problem
Disadvantages
Require energy storage to provide power during solar occultation
High area of panels and the need for sunward reorientation cause occasional blockage of sensors and antennas
High area of panels makes spacecraft susceptible to drag
High vulnerability to detection and strategic threats
Vulnerability to radiation (high energy particulate and electromagnetic)
Packaging difficulty because of large area of panels
Large area contributes to high moment of inertia for spacecraft (difficult maneuverability)

4.4.1 Solar eclipses and the need for energy storage

In any earth orbit the spacecraft will spend up to one-half its orbital period within the earth's shadow, obscured from the sun. Because most projected applications require steady state power, some means of storing the solar energy during the spacecraft "day" and releasing it during such solar eclipses or spacecraft "night" must be provided. Electrochemical energy storage devices such as batteries and fuel cells are currently in use, with the nickel-cadmium battery being the current baseline technology. Batteries are the preferred storage system for use with solar panels, since recharging and discharge voltages are similar. For the less reversible fuel cells, recharging requires special power conditioning.

Two major disadvantages result from adding energy storage capability: added power system mass and the need to supply enough additional solar panel capacity to recharge the batteries during the "day" part of orbit (in addition to providing the desired load power). A figure of merit for battery performance is the specific energy, usually expressed in watt-hours per kilogram of battery mass. The battery mass must be considered in calculating the overall specific power for the space power system. In addition the number of charge/discharge cycles affects the watt-hours per kilogram figure of merit. For this reason GEO missions,

with their longer, hence fewer, light/darkness cycles, experience higher battery specific energies than LEO missions. Energy storage system costs in the literature often appear as unit costs in terms of dollars per watt hour of storage capacity. Table 4.3 shows some figures of merit for current and advanced energy storage devices.

Another disadvantage of SPPs is atmospheric drag, a consideration that will be discussed in the next chapter.

Table 4.3. Some hardware figures of merit for energy storage devices

Energy storage device	Specific energy (W-h/kg)	Cost[a] ($/W-h)
NiCd batteries	4 to 35	15 to 30
NiH_2 batteries	23 to 55	20+
Regenerative fuel cells	11 to 15	37 to 49
High energy density rechargeable battery (HEDRB)	11 to 110	Not available

[a]Labor and materials only (overhead and qualification costs not included).

4.5 References

1. "Moving Into Space: Power for NASA's Space Station," Rocketdyne Division, Rockwell International.

2. D. E. Rockey et al., "Comparison of Evolving Photovoltaic and Nuclear Power Systems for Earth Orbital Applications," Proceedings of the 17th Intersociety Energy Conversion Energy Conference, Paper No. 829011, TRW Corporation, August 1982.

5. ORBITAL AND LAUNCH CONSIDERATIONS

5.1 Orbit Classification

The altitude and nature of a spacecraft's orbit affect several aspects of mission economics and power system design. Among the orbit-dependent entities are the period of darkness, atmospheric drag, solar cell radiation damage, launch payload size, and booster requirements. Two basic orbit types, LEO and high earth orbit (HEO), are discussed.

Low earth orbits are those that can be attained by the space shuttle orbiter vehicle and that range from 300 to 600 km (average vertical distance from sea level). In the lower end of this range, the very tenuous top of the earth's atmosphere exerts a small but significant drag force on any forward surfaces exposed. For this reason it is necessary to occasionally reboost satellites in LEO. The propellant and rocket engines needed for the reboost task constitute additional payload mass for the shuttle orbiter and detract from the mass available for space power production. A payload lifted by the space shuttle into LEO can be deployed with very little effort, without the use of an additional booster stage. For HEO (i.e., 600 km and above), however, this is not the case. The shuttle orbiter payload bay must carry a booster stage [orbital transfer vehicle (OTV)] and propellant (in addition to the orbiting payload) such as a Centaur-G rocket engine. HEOs do have the advantage, though, that atmospheric drag is negligible and reboost is not necessary. As HEO size increases, however, other problems arise. In the 4,000 to 10,000-km region, the interaction of the solar wind with the earth's lines of magnetic force creates a region, the Van Allen Belt, where high energy (~1 MeV) proton and electron fluxes are large and radiation damage to electronics and semiconductor materials, such as solar cells, can be significant. Fortunately, one of the most utilized HEOs, the GEO at 36,000-km altitude, is located well outside this highest-flux region. At this altitude the average orbital period is equal to the earth's rotational period; thus, a satellite always faces the same part of the earth's surface. For weather, navigational, communications, and some types of surveillance satellites, this GEO is necessary.

5.2 Launch Considerations

These orbital and launch factors all affect the design, performance, cost, and ultimate load capacity of a shuttle-deployable SPP space power satellite (SPS). The model described in the next chapter will present quantitative relationships and underlying assumptions central to the conclusions of this study.

6. A DESIGN AND COST MODEL FOR SOLAR PHOTOVOLTAIC PANELS

6.1 Key Model Assumptions

The model discussed here allows one to specify a given design power load and receive as output the Shuttle Orbiter payload masses and the cost of deploying an SPS and maintaining it in orbit. Much of the model is based on simple algorithms or curve fits derived from more detailed aspects of SPP technology found in the literature. A block diagram for the model is shown in Fig. 6.1. Listed below are the key assumptions.

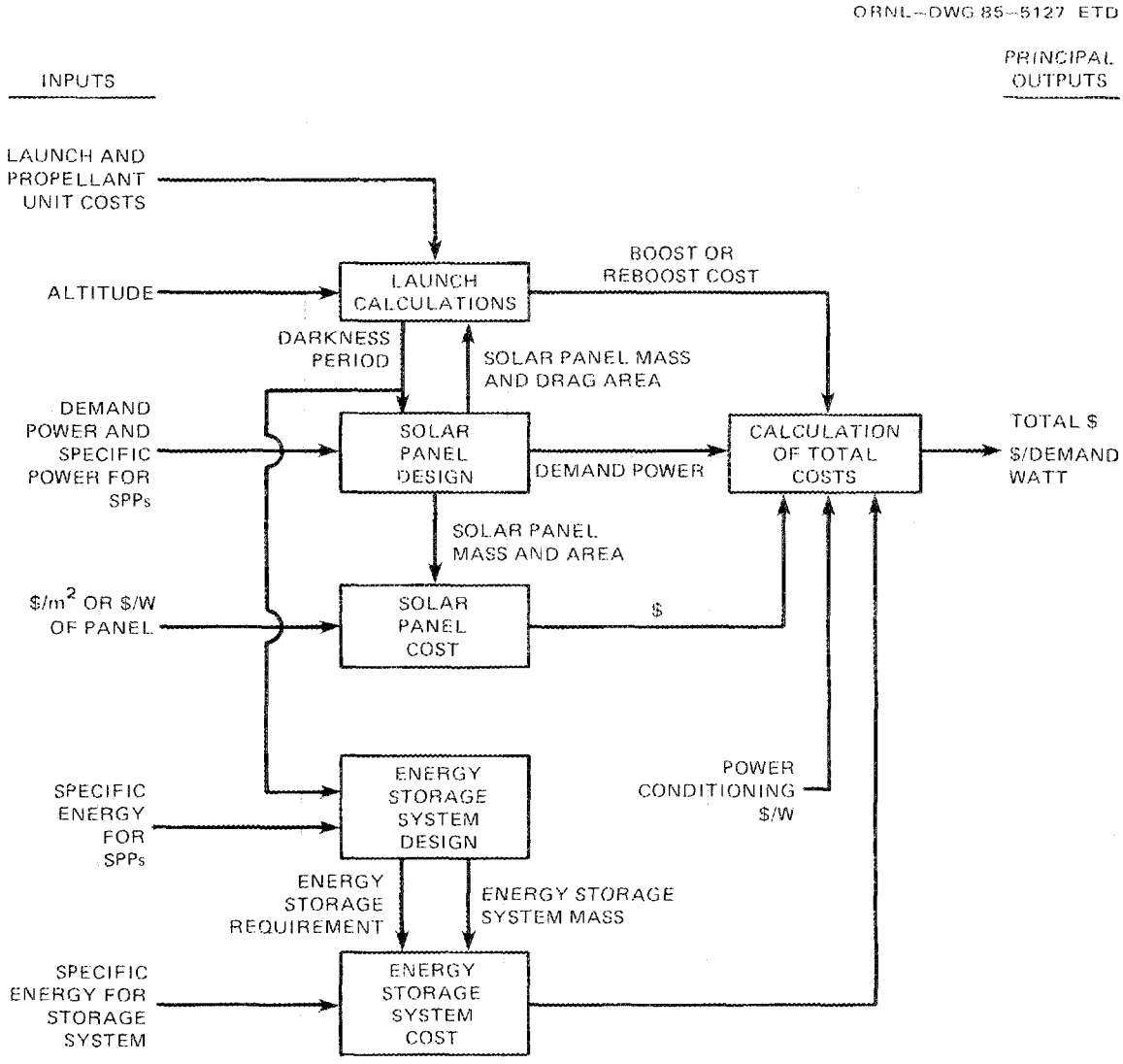

Fig. 6.1. Block diagram for SPS model.

1. The SPS payload is assumed to consist of a power system [solar panels, an energy storage system (batteries or regenerative fuel cells), and a power conditioning system] and, if needed, the LEO reboost or HEO boost engine/propellant needed to attain and sustain orbit. The total mass of the above must be such that it can be carried in the bay of one shuttle orbiter.
2. Boost from LEO to HEO is accomplished via a Centaur-type booster stage. This shuttle-deployable vehicle will be available in early 1986. Advanced OTVs concepts such as ion engines and reusable "space tugs" are not considered.
3. It is assumed that whatever geometric shape the SPP system takes, it can be somehow folded into the shuttle bay and unfolded at orbital insertion.
4. The question of vulnerability of a space power satellite (SPS) to particles, laser beams, and other intentional or non-intentional space hazards was not addressed. Only radiation damage to solar cells is considered.
5. The space shuttle is the only vehicle considered for transportation of payloads from earth to LEO. For a very large payload, for example, 100 metric tons, a new space transportation system will be needed. The 26 metric ton shuttle capacity considered here is for orbits with low inclination to the equator, such as those launched eastward from Cape Canaveral at ~28° to the equator.

6.2 Inputs and Outputs for the Code

Table 6.1 lists the inputs to the codes along with their appropriate units and a range of values. Table 6.2 lists the principal code outputs including cost figures of merit.

6.3 Description of Code Algorithms: Solar Panel Design

Given the desired steady state or demand power, PDES, the code calculates the size and mass of the solar panels and energy storage system needed to support the mission. It is assumed that at EOL (i.e., at the end of NYRS years) the power satellite can still deliver PDES watts; therefore, the peak power required from the panels, PREQ may be significantly larger than PDES. The performance degradation factor, PDFK, is one of the variables needed to calculate PREQ, and depends on the extent of radiation damage and the mission lifetime, NYRS. In a 1982 Jet Propulsion Laboratory (JPL) paper[1] by Rockey et al., PDFK is represented as the ratio of EOL power to beginning-of-life (BOL) power. This ratio is calculated via a detailed radiation damage model for various orbit altitudes, lifetimes, and solar cell thickness. [Although thin cells have better specific power values (KSA), they are sometimes more subject to damage.] Using an interpolation software package and the data from the above paper, a subroutine has been developed to calculate the degradation factor due to radiation damage (PDFK)

Table 6.1. Input variables for solar power satellite code

Variable name	Variable function	Units	Value range
PDES	Desired or demand load steady state power for satellite	W[a]	10^3 to 10^6
NYRS	Duration of power satellite mission	Years	1 to 10
IES	Flag indicating type of energy storage		1 (batteries) 2 (regenerative fuel cells)
KSA	Specific power for solar panels (peak power)	W/kg	30 to 300
PA	Areal power density for solar panels (peak power)	W/m^2	50 to 300
FCDENS	Fuel cell energy density (used if IES = 2)	W-h/kg	10 to 25
EDENS	Battery energy/density (used if IES = 1)	W-h/kg	5 to 60
HORB	Orbit altitude	km	300 to 40,000
CSHUTL	Unit cost for shuttle launch to LEO	$/kg	2,000 to 5,000
COTV	Cost of booster stage	$	2×10^7 to 6×10^7
CSA	Total cost per watt for solar panels including blanket and structures (space qualified)	$/W (peak)	200 to 700
CBATT	Battery energy storage cost per watt-hour (used if IES = 1) (space-qualified)	$/W-h	60 to 120
CRFC	Regenerative fuel cell cost per watt-hour (used if IES = 2) (space-qualified)	$/W-h	100
IDRAG	Flag to activate effects of atmospheric drag on satellite		0 (no) 1 (yes)
IRAD	Flag to activate effects of radiation damage on SPPs		0 (no) 1 (yes)

[a]Units for power are electrical watts [W(e)].

Table 6.2. Output variable for solar power satellite code

Variable name	Variable function	Units	Comments
PDFK	EOL/BOL performance degradation because of radiation damage	dimensionless	If PDFK = 1.0, no degradation exists
PREQ	Peak SPP power requirement	W^a	
PBREQ	Battery energy storage requirement	W-h	
PFCREQ	Fuel cell energy storage requirement	W-h	
ASA	SPP incident area	m^2	
MSA	Solar array mass	kg	
MES	Energy storage system mass	kg	
MAUX	Power conditioning system mass	kg	
MTOT	Total power system mass	kg	
MBOOST	Mass of LEO to HEO boost propellant and engine	kg	
MREBOO	Mass of LEO reboost propellant and engine	kg	
MPLOAD	Nonpower payload	kg	For space power dedicated satellite, this should approach zero
PLOAD	Total shuttle bay payload	kg	
KRES	Energy storage system specific power	W/kg	
KTOT	Total power system specific power	W/kg	In terms of demand load power
DRAG	Reboost fuel consumption because of atmospheric drag	lb of propellant/ft^2/year	
CARRAY	SPP cost	$	
CES	Energy storage system cost	$	
CAUX	Power conditioning system cost	$	
CMTOT	Total power system cost	$	
CSHUTT	Cost of power system earth to LEO transport	$	

Table 6.2 (continued)

Variable name	Variable function	Units	Comments
CREBOO	Manufacturing cost of reboost propellant	$	
CCRB	Cost of reboost fuel earth to LEO transport	$	
CBOOST	Manufacturing cost of LEO to HEO booster stage propellant	$	
CSTAGE	Manufacturing cost of booster stage	$	
CCENSH	Cost of booster fuel and engine transport from earth to LEO	$	
CLHTOT	Total launch cost	$	
CMPOW	Power system cost per watt	$/W	In terms of demand load power
CLWATT	Launch cost per watt	$/W	In terms of demand load power
CTWATT	Total cost per watt	$/W	In terms of demand load power

[a]Units for power are electrical watts [W(e)].

as a function of the following:

1. NYRS — the mission lifetime (years),
2. HORB — the satellite altitude (kilometers) and
3. KSA — the solar panel specific power (electrical peak watts per kilogram), which is inversely proportional to solar cell thickness.

As expected, the worst performance degradation occurs at long mission lifetimes, high solar panel specific power, and in the most active part of the Van-Allen belt region (4,000 to 10,000 km). Figure 6.2 shows a typical curve from the cited JPL report[1] showing this orbital variation.

The ratio PDES/PDFK indicates the solar panel overdesign requirement if radiation damage were the only consideration. It is not, however, and one must now consider the additional power requirement for recharging or regenerating the energy storage system during the satellite sun exposure period. First, the fraction of the orbit that the satellite spends in the earth's shadow (the shadow factor) must be calculated

$$F = \{\arcsin [REARTH/(REARTH + HORB)]\}/\pi ,$$

where

REARTH = average radius of the earth (6378 km),
F = shadow factor (dimensionless).

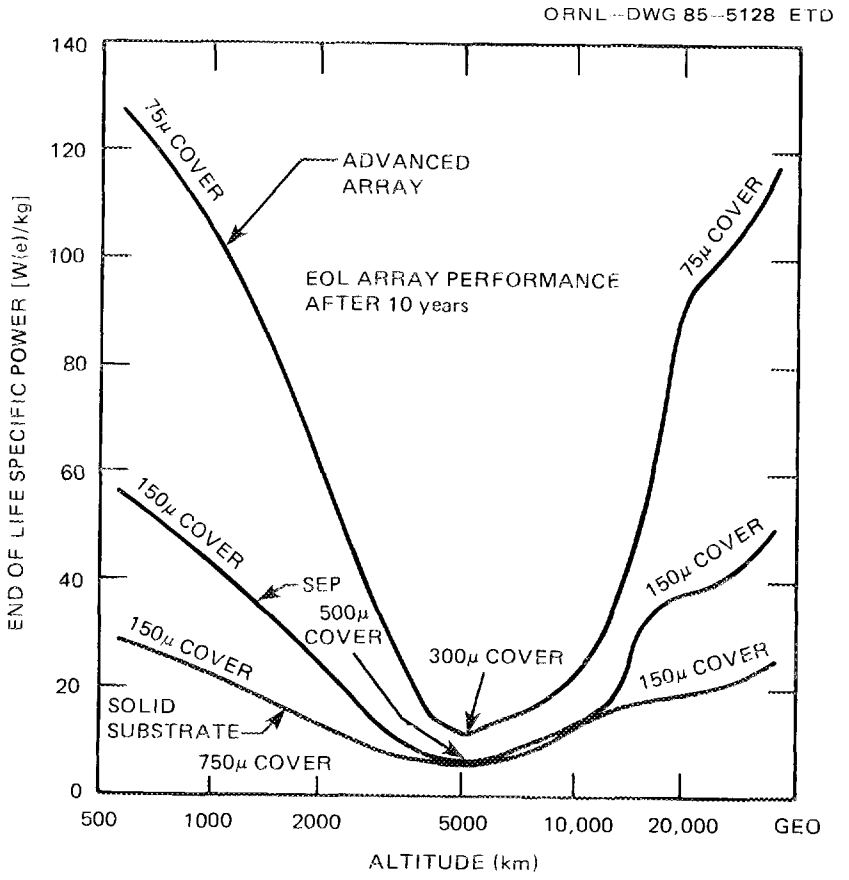

SOURCE: JET PROPULSION LABORATORY (Ref. 1)

Fig. 6.2. Solar array specific power after 10 years.

The shadow factor is always <0.5 and decreases with increasing orbit size. This equation is applicable to most LEO and HEO circular orbits utilized by earth satellites.

The orbital period is calculated from Kepler's third law for circular orbits:

$$PER = 2\pi\,[1000\,(REARTH + HORB)]^{1.5}/(3600 * 1.998 \times 10^{7}) ,$$

where

PER = the orbital period in hours.

The product (F * PER) represents the time that the satellite spends in darkness and the time for which the energy storage system must discharge at the demand power level PDES. This darkness period increases with orbital altitude.

The solar panel power requirement depends on the type of energy storage option chosen. The previously cited JPL paper[1] by Rockey et al. suggests the following forms for the two storage options, batteries and fuel cells. If the flag IES = 1, batteries are assumed used, and

$$PREQ = (PDES/PDFK) * Q * 1 + \frac{F}{CDEFF\ (1 - F)} ,$$

where

PDES = desired power load (watts),
PDFK = performance degradation factor
(<1.0 if IRAD = 1)
(1.0 if IRAD = 0),
Q = power conditioning and cabling loss factor (constant at 1.05),
F = shadow fraction,
CDEFF = charge to discharge efficiency (constant at 0.65).

If the flag IES = 2, regenerative fuel cells are assumed used and the same equation applies, except that CDEFF = 1.

Given the solar panel power requirement PREQ, the solar panel mass and area can be calculated as follows:

$$MSA = PREQ/KSA ,$$

where

MSA = solar panel mass in kilograms,
KSA = solar panel specific power in electrical watts per kilogram (a technology input);

and

$$ASA = PREQ/PA ,$$

where

ASA = solar panel incident area,
PA = areal power density in electrical watts per square meter (a technology input).

6.4 Energy Storage System Requirements

Algorithms similar to the above can be used to calculate the energy storage requirements, storage system mass, and the energy storage specific power.

For a battery system (IES = 1),

PBREQ = PDES * Q * F * PER/DOD ,

where

Q = conditioning and cabling loss factor (1.05),
DOD = battery depth of discharge (dimensionless) (constant at 0.35),
PBREQ = energy requirement for storage (watt-hours),
(F * PER) = time of discharge (shadow factor times orbital period).

The battery mass is calculated as

MES = PBREQ/EDENS ,

where

EDENS = the battery specific energy density in watt-hours per kilogram (a technology input).

The battery specific power algorithm is

KRES = PBREQ * DOD/(F * PER * MES) ,

where

KRES = battery storage system specific power in watts per kilogram, and the other terms are as described previously.

If a regenerative fuel cell (RFC) system is used (IES = 2),

PFCREQ = PDES * Q * F * PER ,

where

PFCREQ = the energy requirement for storage (watt-hours).

The fuel cell system mass is calculated as

MES = PFCREQ/FCDENS ,

where

FCDENS = the fuel cell specific energy density in watt-hours per kilogram (a technology input).

The fuel cell specific power algorithm is

KRES = PFCREQ/(MES * F * PER) ,

where

KRES = fuel cell storage system specific power in watts per kilogram, and other terms as described previously.

If the power conditioning system specific power, KAUX, is known, the mass, MAUX, of this system is calculated as

MAUX = PDES/KAUX .

A value of 125 watts per kilogram for KAUX is considered typical.

The total mass of the power generation part of the payload is now calculated by summing its three components:

MTOT = MSA + MES + MAUX (kg) ,

or

$$\begin{matrix}\text{solar}\\ \text{panels}\end{matrix} + \begin{matrix}\text{energy}\\ \text{storage}\end{matrix} + \begin{matrix}\text{power}\\ \text{conditioning}\end{matrix} .$$

The specific power figure of merit can now be calculated in terms of the demand power and the total power dedicated equipment mass:

KTOT = PDES/MTOT ,

where KTOT is in watts/kilogram.

6.5 Atmospheric Drag Considerations

In the lower LEOs (i.e., 300 to 450-km altitude), the top of the earth's atmosphere is of sufficient density such that a significant drag force is exerted on the surface area of a satellite. The large flat areas associated with solar photovoltaic panels greatly increase the drag force such that the danger of orbital decay and burnup of the

satellite upon re-entry is significant. The solar panel areas can be extensive and for space power systems producing hundreds of kilowatts, could be the size of a football field, that is, ~6,000 m^2. A satellite utilizing SPPs must be reboosted periodically to stabilize its orbit. A small rocket engine is required, and an amount of propellant that depends on solar panel area, the altitude, and the duration of the mission as follows:

$$MREBOO = DRAG * NYRS * ASAF/2.205 ,$$

where

$$DRAG = 0.5 * 10^{\left(\frac{450 - HORB}{100}\right)} ,$$

where

DRAG = the reboost propellant requirement in pounds per year per square foot of panel,
MREBOO = the weight of reboost propellant in kilograms (the engine mass is assumed small compared to the propellant mass),
ASAF = the incident solar panel area in per square feet,
NYRS = the mission duration.

It can be seen that the effect of drag decreases a factor of ten as the LEO altitude is increased by 100 km. This relationship was derived from data available in papers by Sorensen[2] and Giudici[3] concerning space station design issues.

Unfortunately, this amount of propellant must be carried as part of the SPS payload in the shuttle and, thus, increases the transportation expense. All propellant for reboost (i.e., enough to last the entire mission) must be transported at time of satellite launch unless some sort of periodic refueling service is available from the shuttle orbiter. The most serious disadvantage is the reduction in power-dedicated payload effected by the need to carry this propellant and rocket engine.

6.6 Payload Considerations

It is also important to consider the total payload that can be carried to earth orbit by the space shuttle alone or the shuttle/OTV system depends on the altitude. The following simplified relationship was derived by constructing a log-log plot of both Centaur G payload versus altitude data (from a paper by Buden[4]) and the maximum shuttle payload of 26 metric tonnes for an LEO. The resulting straight line on the log-log plot is described as follows:

$$PLOAD = 10{,}000.0 * (5.07 - \log_{10} HORB) .$$

PLOAD is the maximum deployable non-OTV payload in kilograms for a 28° inclined (to the equator) eastward launch from Cape Canaveral. An LEO of 300 km for the shuttle is assumed prior to booster stage deployment.

For early missions (before year 2000) a throw-away liquid H_2/liquid O_2-fueled Centaur-G booster stage will be used for orbital transfer to HEO. In later (after year 2000) missions a "space-tug," or other reuseable OTV based at a space station in LEO, might be used for LEO to HEO transport.[5] Both solar and nuclear electric propulsion, using ion engines, have been suggested as alternatives to chemical propulsion for OTV applications.

The nonpower, nonpropulsion payload available in the shuttle bay can be calculated for LEO or HEO as follows:

$$MPLOAD = PLOAD - MTOT - MREBOO \ ,$$

where

MPLOAD is in kilogram,
PLOAD = the total shuttle non-OTV payload mass adjusted for altitude and possible LEO to HEO injection,
MTOT = the total power system mass,
MREBOO = the reboost propellant and engine mass needed to maintain LEO.

If PDES is chosen such that MPLOAD approaches zero, then the payload is assumed totally dedicated to power production. This will be the case for the code results shown in Chap. 7.

6.7 The Cost Model

In the model presented, it is assumed that all fuel and equipment is deployed at the beginning of the mission and that no costs will be incurred for O&M procedures during the duration NYRS. Thus, the portion of the life cycle that will be considered is the deployment phase, which includes the following costs:

1. SPS Manufacturing, overhead, and qualification costs including:
   a. solar panels,
   b. energy storage, and
   c. power conditioning;
2. SPS launch costs:
   a. space shuttle launch of SPS power system,
   b. space shuttle launch of SPS reboost propellant and engine (if needed),
   c. space shuttle launch of Centaur booster stage (OTV) and propellant (if HEO),
   d. space shuttle launch of additional payload (if MPLOAD > 0),

e. propellant and engine manufacturing cost for reboost (LEO only), and
f. propellant and OTV engine manufacturing cost for booster stage (LEO to HEO).

An attempt has been made to aggregate as many cost categories as possible and express quantities on a unit cost basis.

6.7.1 Power equipment manufacturing costs

Capital costs for the three components of the power system are calculated as follows.

Solar arrays. The literature usually quotes unit costs in terms of dollars per watt or dollars per square meter. The variable names CSA and CSAA respectively are used for these quantities. The total panel cost, CARRAY, is thus determined from the peak power requirement PREQ or the panel solar incident design area, ASA:

CARRAY = CSA * PREQ ,

or

CARRAY = CSAA * ASA .

CSA or CSAA should represent the unit cost for fully space-qualified panels, including general and administrative (G&A) costs, other overheads, etc.

Energy storage. Energy storage costs are usually given in terms of dollars per watt-hour. Total energy storage system cost, CES, can be calculated from the energy storage requirement for either the battery (PBREQ) or the fuel cell system (PFCREQ) as follows:

If IES = 1 (battery), CES = CBATT * PBREQ;

if IES = 2 (fuel cell), CES = CRFC * PFCREQ;

where CBATT and CRFC are unit costs in dollars per watt fully space-qualified, including all G&A costs and overheads).

Power conditioning. The total power conditioning cost, CAUX, is calculated from the power conditioning mass, MAUX, and a unit cost of $10/W by

CAUX = 10.0 * MAUX .

The total power system cost is expressed as the sum

CMTOT = CARRAY + CES + CAUX .

The unit cost (in dollars per watt) for the SPS power system in terms of the demand power is calculated as

CMPOW = CMTOT/PDES .

6.7.2 Launch related costs

Space shuttle launch costs are usually expressed in terms of dollars per unit mass, and there is considerable disagreement, even within the U.S. government, as to what a shuttle customer should be charged. Part of the difficulty arises from the question of how much of the shuttle development and manufacturing costs should be written off against mission charges and against the various user agencies (e.g., NASA, commercial, military). Estimates for the cost of a launch vary from 50 million to over 200 million dollars. Appendix C includes a more detailed discussion of shuttle launch costs to both LEO and GEO. A value of 69 million dollars per launch will be used here. For a typical 26,000-kg payload, this converts to a unit cost of $2,640/kg launched (CSHUTL). The calculation of total launch costs can be partitioned among the various items launched as follows:

Power system: CSHUTT = CSHUTL * MTOT ,

Reboost fuel: CLRB = CSHUTL * MREBOO ,

Booster (OTV) stage (Centaur fuel, tanks, and engine): CCENSH = (CSHUTL * MBOOST) + CSTAGE ,

where the mass of the OTV is approximated by

MBOOST = 26000 — PLOAD in kilograms.

Propellant manufacturing costs for LEO reboost and LEO to HEO boost are small compared to the cost of transporting (via the shuttle) the propellant and engines from earth to LEO. Reboost propellant, most likely to be hydrazine, is estimated to cost on the order of $10/kg. The reboost engine is small enough that its cost was ignored in this study. A booster stage fuel cost of $20/kg is assumed for HEO missions. This fuel is likely to be liquid O_2 and liquid H_2 propellant mixed and burned in a Centaur stage. The higher unit propellant cost is assumed to cover the throw-away propellant tanks. The fuel costs are calculated as follows:

for LEO reboost,

CREBOO = MREBOO * 10 ;

for LEO to HEO,

CBOOST = MBOOST * 20 .

The throw-away Centaur booster stage cost (CSTAGE) is added if HORB >600 km; that is,

IF (HORB. GT. 600) CSTAGE = COTV (an input) .

Otherwise, CSTAGE = 0. A booster stage (OTV) cost of $20 million is assumed for the cases considered. The total launch cost is the total of the above costs:

CLHTOT = CSHUTT + CREBOO + CLRB + CBOOST + STAGE + CCENSH .

If the correct value of PDES (desired power) is selected such that the extra (nonpower, nonboost) payload MPLOAD approaches zero (a trial and error procedure), the entire satellite payload can then be said to be dedicated to a space power mission. If the above launch cost is divided by demand power load PDES, the launch cost per watt can be calculated

CLWATT = CLHTOT/PDES .

The total space power cost per watt can be calculated as the sum of the launch unit cost and the manufacturing unit cost (in dollars per watt):

CTWATT = CLWATT + CMPOW .

In the next section an example case will be shown, input value for crucial parameters assessed, and the results of some sensitivity studies discussed.

6.8 Sample Model Output

An LEO and HEO case, Tables 6.3 and 6.4, are actual outputs from the code for two example cases, an LEO mission and a GEO mission. Both cases assume that the satellite payload is dedicated entirely to space power production. Additional cases will be presented in tabular form in the next chapter, and the significance of the input values will also be discussed.

Table 6.3. Sample LEO mission case

```
*****SPACE POWER SYSTEM USING SOLAR ARRAYS & ENERGY STORAGE*****

INPUT DATA

DESIRED EOL  POWER IN WATTS:  31750.
DESIRED YRS OF OPERATION:     10.
TYPE OF STORAGE:1=BATTERY, 2=FUEL CELL:  IES=  1
SOLAR ARRAY SPECIFIC POWER,W/KG:     50.0
SOLAR ARRAY WATTS/M**2  :  105.0
FUEL CELL ENERGY DENSITY, W-HR/KG :    18.0
ORBIT HEIGHT IN KM:        450.
BATTERY ENERGY DENSITY, W-HR/KG :     9.0
SHUTTLE LAUNCH COST TO LEO,$/KG :    2640.
 BOOSTER (OTV) STAGE COST, $M :       0.
SOLAR ARRAY COST PER WATT INCL. STRUCTURES:    600.
BATTERY COST PER W-HR :  120.0
FUEL CELL COST PER W-HR :  100.0

***OUTPUT DATA***

EOL/BOL PERFORMANCE DEGRADATION FACTOR DUE TO
VAN-ALLEN BELT RADIATION DAMAGE AT     450. KM ALT:   0.937

SHADOW FACTOR=  0.384
ORBITAL PERIOD IN HOURS=   1.56

SOLAR ARRAY POWER REQT IN WATTS:   69665.
AREA OF SOLAR ARRAYS, SQ.METERS=    663.5 SQ.FT=   7137.9
SOLAR ARRAY KG/M**2    2.10

BATTERY  ENERGY IN TERMS OF REQT, W-HR    56983.19
FUEL CELL ENERGY IN TERMS OF REQT, W-HR  15944.12
EN STOR SP. POWER FOR REQD POWER, W/KG   5.27

MASS OF SOLAR ARRAYS IN KG    1393.3
MASS OF ENERGY STORAGE SYSTEM IN KG     6331.5
MASS OF POWER AUXILIARIES IN KG      254.0
TOTAL MASS OF POWER SYST. IN KG     7978.8

TOTAL POWER SYSTEM SP POWER IN W/KG (DES LD)        4.0
TOTAL POWER SYSTEM INV.SPEC.POWER IN KG/KW 251.30

ATMOS. DRAG: LB.REBOOST FUEL/YR/FT2 S.A. :    0.500000
REBOOST FUEL PAYLOAD FOR SOLAR ARRAYS IN LEO  16185.7
SHUTTLE P.L. AVAIL INCL EFF OF HEO BOOST: 24168. KG
NON-POWER, NON-BOOST PAYLOAD       3. KG


*** COST OUTPUT ***


 POWER SYS MFG. COSTS:
   SOLAR ARRAYS:              69664.6 W    X   600.00 $/W = $     41.799 M
   BATTERIES:                 56983.2 W-HR X120.00 $/W-HR= $      6.838 M
   AUXILIARIES:                                          = $      0.003 M

   TOTAL MFG COST:                                       = $     48.639 M
```

Table 6.3 (continued)

UNIT COSTS:

POWER:	1531.94	$/W
MASS:	6096.09	$/KG

LAUNCH MASSES:

POWER SYSTEM	7979.
REBOOST FUEL (LEO)	16186.
BOOST STG&FUEL (LEO TO HEO)	0.
OTHER AVAIL SPACE	3.
TOTAL SHUTTLE PLD.	24168.

LAUNCH & ALTITUDE MAINT COSTS FOR POWER SYSTEM

SHUTTLE LAUNCH OF PS TO LEO	21.064	M$
REBOOST FUEL (LEO ONLY)	0.162	M$
SHUTTLE LAUNCH OF REBOOST FUEL TO LEO (LEO ONLY)	42.730	M$
SHUTTLE LCH OF CENT BOOST&FUEL TO LEO(HEO ONLY)	0.0	M$
CENT BOOST OF FUEL &TANKS FROM LEO TO HEO	0.0	M$
CENTAUR STAGE COST(ENGINE)	0.0	$M
TOTAL COST	63.956	M$

LAUNCH COST PER WATT OF SPACE POWER DESIRED:	2014.	$/WATT
MFG.&QUAL.COST PER WATT OF SPACE POWER DESIRED	1532.	$/WATT
TOTAL COST PER WATT OF SPACE POWER DESIRED;	3546.	$/WATT

TOTAL COST PER KG FOR POWER SYSTEM:	8016.	$/KG

Table 6.4. Sample HEO mission case

```
*****SPACE POWER SYSTEM USING SOLAR ARRAYS & ENERGY STORAGE*****

INPUT DATA

DESIRED EOL  POWER IN WATTS:  12200.
DESIRED YRS OF OPERATION:      10.
TYPE OF STORAGE:1=BATTERY, 2=FUEL CELL:  IES=  1
SOLAR ARRAY SPECIFIC POWER,W/KG:     50.0
SOLAR ARRAY WATTS/M**2  :  105.0
FUEL CELL ENERGY DENSITY, W-HR/KG :    18.0
ORBIT HEIGHT IN KM:      36000.
BATTERY ENERGY DENSITY, W-HR/KG :     9.0
SHUTTLE LAUNCH COST TO LEO,$/KG :    2640.
 BOOSTER (OTV) STAGE COST, $M :      20.
SOLAR ARRAY COST PER WATT INCL. STRUCTURES:    600.
BATTERY COST PER W-HR :  120.0
FUEL CELL COST PER W-HR :  100.0

***OUTPUT DATA***

EOL/BOL PERFORMANCE DEGRADATION FACTOR DUE TO
VAN-ALLEN BELT RADIATION DAMAGE AT   36000. KM ALT:   0.872

SHADOW FACTOR=  0.048
ORBITAL PERIOD IN HOURS=  24.10

SOLAR ARRAY POWER REQT IN WATTS:   15840.
AREA OF SOLAR ARRAYS, SQ.METERS=    150.9 SQ.FT=   1623.0
SOLAR ARRAY KG/M**2    2.10

BATTERY  ENERGY IN TERMS OF REQT, W-HR    42421.11
FUEL CELL ENERGY IN TERMS OF REQT, W-HR  14847.39
EN STOR SP. POWER FOR REQD POWER, W/KG   2.72

MASS OF SOLAR ARRAYS IN KG     316.8
MASS OF ENERGY STORAGE SYSTEM IN KG     4713.5
MASS OF POWER AUXILIARIES IN KG       97.6
TOTAL MASS OF POWER SYST. IN KG     5127.9

TOTAL POWER SYSTEM SP POWER IN W/KG (DES LD)        2.4
TOTAL POWER SYSTEM INV.SPEC.POWER IN KG/KW 420.32

ATMOS. DRAG: LB.REBOOST FUEL/YR/FT2 S.A. :    0.0
REBOOST FUEL PAYLOAD FOR SOLAR ARRAYS IN LEO      0.0
SHUTTLE P.L. AVAIL INCL EFF OF HEO BOOST:  5137. KG
NON-POWER, NON-BOOST PAYLOAD       9. KG


*** COST OUTPUT ***


 POWER SYS MFG. COSTS:
   SOLAR ARRAYS:                 15840.1 W    X   600.00 $/W = $      9.504 M
   BATTERIES:                    42421.1 W-HR X120.00 $/W-HR= $      5.091 M
   AUXILIARIES:                                             = $      0.001 M

   TOTAL MFG COST:                                          = $     14.596 M
```

Table 6.4 (continued)

UNIT COSTS:

POWER:	1196.36	$/W
MASS:	2846.33	$/KG

LAUNCH MASSES:

POWER SYSTEM	5128.
REBOOST FUEL (LEO)	0.
BOOST STG&FUEL (LEO TO HEO)	20863.
OTHER AVAIL SPACE	9.
TOTAL SHUTTLE PLD.	26000.

LAUNCH & ALTITUDE MAINT COSTS FOR POWER SYSTEM

SHUTTLE LAUNCH OF PS TO LEO	13.538	M$
REBOOST FUEL (LEO ONLY)	0.0	M$
SHUTTLE LAUNCH OF REBOOST FUEL TO LEO (LEO ONLY)	0.0	M$
SHUTTLE LCH OF CENT BOOST&FUEL TO LEO(HEO ONLY)	55.078	M$
CENT BOOST OF FUEL &TANKS FROM LEO TO HEO	0.417	M$
CENTAUR STAGE COST(ENGINE)	20.000	$M
TOTAL COST	89.033	M$

LAUNCH COST PER WATT OF SPACE POWER DESIRED:	7298.	$/WATT
MFG.&QUAL.COST PER WATT OF SPACE POWER DESIRED	1196.	$/WATT
TOTAL COST PER WATT OF SPACE POWER DESIRED;	8494.	$/WATT

TOTAL COST PER KG FOR POWER SYSTEM:	17363.	$/KG

6.9 References

1. D. E. Rockey et al., "Comparison of Evolving Photovoltaic and Nuclear Power Systems for Earth Orbital Application," Proceedings of the 17th Intersociety Energy Conversion Engineering Conference (IECEC-82), Paper No. 829011, Jet Propulsion Laboratory, August 1982.

2. A. Sorensen, "Space Station Electrical Power System Technology," Proceedings of the 19th Intersociety Energy Conversion Engineering Conference (IECEC-84), Paper No. 849338, TRW Corporation, August 1984.

3. R. J. Giudici, "Space Station Power System Issues," Proceedings of the 20th Intersociety Energy Conversion Engineering Conference (IECEC-85), Paper No. 859088, Marshall Space Flight Center, August 1985.

4. D. Buden et al., "Space Reactors — What is a Kilogram?," Proceedings of the 19th Intersociety Energy Conversion Engineering Conference (IECEC-84), Paper No. 849005, Los Alamos National Laboratory, August 1984.

5. T. A. Heppenheimer, "Paving the Way for Space Tugs," *High Technology*, 57—59 (September 1985).

7. RESULTS

7.1 Performance and Cost Data: A Literature Survey

For the previously described code to be useful, the input data, that is, the performance and cost variables, must be credible. During the literature search part of this study, over 50 recent (1978–1985) articles or reports were accessed. Of these 24 had data useable by the code.[1-24] For most of the performance-related input parameters, the variation in numerical values was wide, that is, for such hardware data as watts per kilogram or watts per square meter. The variation is likely attributable to different stages of solar cell or energy storage development, differing degrees of developer optimism, and differing definitions of the described system and its figures of merit. For cost data, the range of values was even greater, that is, over an order of magnitude difference in dollars per watt. Again the problem is mostly one of definition, that is, understanding what costs are accumulated in the numerator dollar figure and what type of watt is described in the denominator. Some authors, for example, would describe only the material and labor cost for silicon solar cell fabrication and not include mountings, panel material, substrate, qualification, etc. Others would describe SPP costs in terms of a fully space-qualified panel system including all profit and overheads. One must also ascertain whether a particular author is using demand load watts or actual solar panel peak power requirements in his dollar per watt figure.

Table 7.1 summarizes the results of the literature survey and forms the data base for the cases to be described and this author's assessment of SPP technology status. The ranges for the principal input variables (as derived from Table 7.1) are given in Table 7.2.

7.2 Technology Assessment and Case Descriptions

Because solar photovoltaic panels constitute an evolving technology, it was decided to project the performance and cost effects on an SPS resulting from advances in SPP development programs. Three scenarios are considered: present technology; nearer-term, advanced-silicon-cell technology; and very advanced-MBG-cell technology. The inputs for each scenario will be described and cost results presented for typical missions under each scenario. Even the most advanced MBG technology should be ready for deployment by 1995.

It will be seen that the specified orbital altitudes for the SPS will have a very strong effect on performance and costs; hence, four missions will be described for each SPP technology scenario. All missions are assumed to span 10 years. The effects of drag and radiation damage are included in each case. Another important assumption made is that the design power load is maximized, that is, the largest power system mass is permitted after accounting for the LEO reboost and LEO to

Table 7.1. Literature SPP power system data[a]

Reference No.	Year	Description of application	SPP data					Energy storage data			Overall SPS power system data		Comments
			Type of cell	Efficiency (%)	Specific power (W/kg)	Areal power density (W/m)	Cost data[b]	Type of system	Specific energy (W-h/kg)	Cost[a] data	Specific power (W/kg)	Unit power cost[a] ($/W)	
1	1978	Space power 5-GW satellite power system	Ga-Al-As	20 (P)		324 (P)							Projects $100/W launch cost
2	1980	Space power	Silicon		100 (CO)		250 to 300 $/m^2						Costs are for silicon cells only
3	1980	Space power	Ga-As concentrator		21 to 56		$820/W (SO,DW,P)						Also gave $1475 /W for hardened silicon SPPs
4	1980	Space power	Silicon				$30 to 80/W (CO)					$400 to 700/W	Structures $70 to 200/W launch $125 to 250/W
5	1980	50-kW space power application	Silicon				$100/W (CO) $800 to 1000/W (SO,DW)						Breakdown of $800/W case
		Mass production of panels (space power)	Silicon				$25.7/W (P,SO,DW)						Projected if demand for panels is 50 MW
6	1980	Space power 2-kW system	Silicon					Battery: NiCd				$865/W (SO,DW)	
7	1980	Space power	Ga-As				$5000/m^2 (P)						
8	1980	Space power (space shuttle power extension package, 32 kW)	Silicon				$185/W (panel)						Panel cost only
9	1980	Space power	Ga-As				$867/W (P,SO,DW)	Battery: NiH		$870/kg			Launch cost: $1000/kg
10	1982	Space: U.S Air Force Demonstration	Silicon	14	49	140		Battery: NiH	33		9 to 15	$1200 to 1800/W (R,SO,DW)	
		Space: Advanced Tech (1995)	MBG	30	106	290		Battery: HEDRB	110		29 to 49		
		Space: Intermediate Tech (1990)	Ga-As	21	66	190	$400/W	Battery: NiH	44	$400/W	20 to 30	$700 to 1000/W (P,SO,SW)	
11	1982	Space power (1980)	Silicon	14				Battery: NiCd			4 to 6 (LEO) 13 to 15 (GEO)	$1000 to 2000/W (SO,DW)	
		Space power (2000)	MBG	20 to 30				Battery: NiH			22 to 33 (LEO) 55 to 66 (GEO)		

Table 7.1 (continued)

Reference No.	Year	Description of application	SPP data: Type of cell	SPP data: Efficiency (%)	SPP data: Specific power (W/kg)	SPP data: Areal power density (W/m)	SPP data: Cost data[b]	Energy storage data: Type of system	Energy storage data: Specific energy (W-h/kg)	Energy storage data: Cost[a] data	Overall SPS power system data: Specific power (W/kg)	Overall SPS power system data: Unit power cost[a] ($/W)	Comments
12	1982	Space power (power level 25 kW)	Silicon	13.5	30 (LEO) 28 (GEO)			Battery: NiCd	26 to 35				
			Silicon	13.5	LEO (58) GEO (50)			Battery: NiH	40 to 48				
			Silicon (advanced)	13.5	LEO (130) GEO (120)			Regenerative fuel cell					
13	1983	Space power: power extension package for shuttle	Silicon		66	100	$377/W						Launch cost: $2640/kg
			Ga-As concentrator cells		24 to 35	200	$116/W (P)						
14	1984	Space power: 1984	Silicon	13.3	35 to 60	97 to 107	$60 to 100/W (CO)	Battery: NiCd	26 to 33	15 to 30			
		1987 (space station)	Ga-As concentrator	20	35 to 51	161 to 238	$30 to 50/W (CO,P)	Regenetrative fuel cell	11 to 15	37 to 49			
15	1984	Space power (space station: 1987)	Silicon	10.3 (array)		123	$30 to 60/W (CO,P)	Regenerative fuel cell	18				
16	1984	Space power (37.5 kW)						Battery: NiCd	3.9				
17	1984	Space power	Silicon					Battery: NiCd			4		
		Ga-As concentrator						Regenerative fuel cell			6.2		
		Solar dynamic (solar dynamic)						None			13.3		Solar dynamic included for purpose of comparison
18	1984	Space power: 1985	Silicon	13	66								
		Space power: early 1990s	Advanced Silicon	15	240								
		Space power: advanced	Ga-As/MBG	18	300								
19	1984	Space power: 1985	Silicon					NiH		9 to 15			
		Space power: 1995	MBG					HEDRB		26 to 31			
20	1984	Terrestrial 1-MW power station	Silicon	11.5			$5.5/W (CO) or $614/m^2						
21	1985	Terrestrial 1-MW power station	Silicon				$6.5/W (panel)					$10.50/W	$4.50/W for non cell components
22	1985	Space power: 1985	Silicon		70								
		Space power: 1995	MBG		300 (P)	300 (P)							

Table 7.1 (continued)

Reference No.	Year	Description of application	SPP data					Energy storage data			Overall SPS power system data		Comments
			Type of cell	Efficiency (%)	Specific power (W/kg)	Areal power density (W/m)	Cost data[b]	Type of system	Specific energy (W-h/kg)	Cost[a] data	Specific power (W/kg)	Unit power cost[a] ($/W)	
23	1985.	Space power: space station: 1987	Silicon			105		Regenerative fuel cell					
24	1985	Space power skylab: 1973	Silicon		7								
		Space station: 1987	Silicon		50 to 60						4.5		
		Space station: 1987	Solar dynamic								13		Solar dynamic for comparison

[a](P) projection; (SQ) panel, space qualified; (CO) cell only; (DW) cost per demand watt); blank spaces indicate no data given.

[b]Dollar basis for costing assumed to be year listed at left at table.

Table 7.2. Performance[a] and cost parameter ranges summarized from Table 7.1

Cell efficiency, %	11.5 to 30
Panel specific power, W/kg	21 to 300
Areal power density, W/m^2	97 to 324
Solar cell unit costs (labor and material costs only), $/W (peak)	30 to 100
Space qualified panel costs, $/W (peak)	100 to 700
Energy storage specific energy, W-h/kg	4 to 110
Energy storage unit costs, $/W-h	15 to 49
Overall power system specific power (demand), W/kg	4 to 66
Overall power system unit cost, $/W demand	400 to 2000

[a](All solar cell technologies, including projections and space applications, assume <1 MW/yr total annual demand for production).

HEO boost payload requirements. Again we are considering a shuttle/Centaur-deliverable dedicated space power satellite.

7.2.1 Present SPP technology

Table 7.3 shows the inputs and results for present-day SPP technology. Planar silicon cells, along with NiCd batteries for energy storage, are assumed. Conservative specific power and specific energy values of 50 W/kg and 9 W-h/kg are assumed for the panels and battery system, respectively. An areal power density of 105 W/m^2 for the solar panels is readily achievable. Typical cell costs in the literature range from $30 to $100/W for present technology. For this model, however, total costs are of interest; hence, space-qualified panel costs should be used as input. A value of $450/W of peak SPP output power required is assumed. For LEO missions the required peak power is at least twice the demand or desired power system load power. If the same cost were translated to dollars per demand watt, a figure of $900+/W in 1985 dollars would result. This agrees with literature values such as the $800/W (demand, 1980 dollars) shown in Table 7.4, taken from Ref. 5, which also shows the breakdown of this cost figure. A model described in Reference 25 includes launch conditions very similar to the LEO-I case in Fig. 7.3. A typical result from this model gives a unit cost of $3200/W for demand power, launch included.

No space-qualified cost for the NiCd battery system could be found. Basic material and labor (M&L) fabrication costs (no overheads) of $4 to $35/W-h were found in the literature. As with solar panels the space-qualified unit cost is expected to be several times the base M&L unit cost. A value of $120/watt-hour was selected as reasonable.

Table 7.3. Code results for SPS missions using present SPP and energy storage[a] technology

Variable	Description	Mission			
		LEO-I	LEO-II	HEO-I	HEO-II (GEO)
	Inputs				
HORB	Orbit altitude, km	450	600	6,000	36,000
NYRS	Duration of mission, years	10	10	10	10
IES	Energy storage flag	1 (batteries)	1	1	1
IDRAG	Drag calculation flag	1 (on)	1	1	1
IRAD	Radiation damage flag	1 (on)	1	1	1
KSA	Solar PV panel specific power, W/kg	50	50	50	50
PA	SPP areal density, W/m^2	105	105	105	105
FCDENS	Fuel cell energy density, W-h/kg				
EDENS	Battery energy density, W-h/kg	9	9	9	9
CSA	Space qualified SPP unit cost, $/peak W	450	450	450	450
CBATT	Battery unit cost, $/W-h	120	120	120	120
CRFC	Fuel cell unit cost, $/W-h				
CSHUTL	Shuttle launch cost, $/kg	2,640	2,640	2,640	2,640
COTV	Booster stage cost, $M	0	0	20	20
PDES	Demand power load, W	31,750	85,800	31,280	12,200
	Outputs				
	Power requirements				
PREQ	Peak SPP power requirement, W	69,665	194,740	291,592	15,840
PDFK	Performance degradation factor, EOL/BOL	0.937	0.875	0.1487	0.8716
PBREQ	Battery energy storage requirement, W-h	56,983	152,145	61,519	42,421
PFCREQ	Fuel cell energy storage requirement, W-h				
ASA	SPP area requirement, m^2	664	1,855	2,777	151
	Specific power				
KRES	Energy storage system specific power, W/kg	5.3	5.3	4.8	2.7
KTOT	Total power system specific power, W/kg	4.0	4.0	2.4	2.4
	Payload masses				
MSA	SPP mass, kg	1,393	3,895	5,832	317
MES	Energy storage system mass, kg	6,332	16,905	6,836	4,714
MAUX	Power conditioning system mass, kg	254	686	250	98
MTOT	Total power system mass, kg	7,979	21,486	12,918	5,129

Table 7.3 (continued)

Variable	Description	Mission			
		LEO-I	LEO-II	HEO-I	HEO-II (GEO)
	Payload masses (continued)				
MBOOST	LEO to HEO boost fuel and engine, kg	0	0	13,082	20,863
MREBOO	LEO reboost fuel, kg	16,186	1,431	0	0
MPLOAD	Nonpower payload, kg (to be minimized for these cases)	3	1	0	8
PLOAD	Total shuttle bay payload, kg (include MTOT above)	24,168	22,918	26,000	26,000
	Mission considerations				
F	Shadow factor	0.384	0.367	0.172	0.048
PER	Orbital period, h	1.56	1.61	3.80	24.10
DRAG	Reboost fuel consumption, lb/ft^2/year	0.5	0.016	0	0
	Power system costs				
CARRAY	SPP total cost, $M	31.3	87.6	131.2	7.1
CES	Energy storage system cost, $M	6.9	18.3	7.4	5.1
CAUX	Power conditioning system cost, $M	<<0.1	<<0.1	<<0.1	<<0.1
CMTOT	Total power system cost, $M	38.2	105.9	138.6	12.2
	Launch costs (all in $M)				
CSHUTT	Shuttle transport of power system	21.1	56.7	34.1	13.5
CREBOO	Reboost propellant manufacturing cost	0.2	<<0.1	0	0
CLRB	Shuttle transport of reboost fuel and engine	42.7	3.8	0	0
CBOOST	Manufacturing cost of boost propellant and tanks	0	0	0.3	0.4
CSTAGE	Manufacturing cost of booster stage	0	0	20.0	20.0
CCENSH	Shuttle transport of booster and propellant	0	0	34.5	55.1
CLHTOT	Total launch cost	64.0	60.5	88.9	89.0
	Unit costs (in terms of demand power)				
CMPOW	Total power system, $/W	1,203	1,234	4,431	1,002
CLWATT	Launch, $/W	2,014	705	2,842	7,298
CTWATT	Total, $/W	3,217	1,939	7,273	8,300

[a](Si cells, NiCd batteries for energy storage)

Table 7.4. Breakdown of space-qualified SPP power costs

Cost element	Unit cost ($/W)[a]
Cell	
Materials	10
Labor	20
Overhead	50
G&A	12
Profit	18
Subtotal	110
Array	
Materials (noncell)	100
Handling	20
Labor	50
Engineering	30
Tooling	30
Inspection and test	40
Overhead	180
G&A	110
Profit	130
Total	800

[a]Demand power

Source: Jet Propulsion Laboratory (Reference 5).

For the space shuttle launch unit cost a value of $2640/kg was used. This is applied to all payloads, the power system, the reboost system and fuel (if applicable), and boost system and fuel (if applicable). This launch cost was extracted from Ref. 13 and is close to a value found in a recent news item in Aviation Week and Space Technology.[26] Nowhere in the open literature has the author been able to find out the actual cost breakdown of a shuttle launch, that is, the writeoff of manufacturing and launch facilities, crew cost, fuel cost, etc. It is apparent that the cost accounting practices for the shuttle are still a subject of disagreement among the involved government agencies.

Of the four missions examined in Table 7.3, the LEO mission at 600 km has the lowest overall unit cost (power system and launch) per watt. At that altitude, which is near the maximum available for the shuttle without additional boost, drag is very small, and deleterious radiation effects from the Van Allen belt are minimal. Essentially all of the shuttle payload can be dedicated to the power system. Thus, the total cost is distributed over a larger demand power level. The unit cost of the power system alone is minimum at the lowest LEO altitude, a result of the performance degradation factor being close to 1.0. At 6000 km, that is, the most intense region of the Van Allen belt, the performance degradation factor is <0.15; thus, the power system must be greatly overdesigned to attain the EOL desired power level. For this reason the unit cost of the power system is highest.

7.2.2 Near-term advanced Si cell technology

The development of thinner silicon cells (fewer kilograms per square meter) and more efficient cells will result in an increase in the specific power and areal density. By the early 1990s values of 240 W/kg and 140 W/m^2 may be realizable for the same cost of \$450/W (space-qualified panel cost). Energy storage technology will also have improved, and NiH_2 batteries, which have a higher projected specific energy on the order of 33 W-h/kg, will be available. A reduced space-qualified battery unit cost of \$60/W-h is considered possible.

Table 7.5 shows the inputs and results for four mission scenarios. The launch costs are the same as for the cases in Table 7.3.

The same basic conclusions as for the cases in Table 7.3 apply, except that the improved technology allows significantly more power per launch to be inserted in orbit. With the exception of the 6000-km case, the unit power costs fall significantly from the case in Table 7.3. The 6000-km case unit cost stays nearly the same because higher BOL specific power cells do not fully compensate for the more serious radiation damage associated with thinner solar cells.

7.2.3 Most advanced MBG technology

By the mid to late 1990s it is projected that MBG solar cells making significantly higher use of the solar spectrum will be available and that efficiencies approaching 40% are possible. Considerable development of new materials, multilayer fabrication techniques, and concentrator optics is required. Panels with such cells have specific powers as high as 300 W/kg and areal densities as high as 300 W/m^2. If one is optimistic and assumes economies of scale can be implemented in SPP production by 1995, it is likely that such cells will fall below present Si cells in unit cost. A space-qualified unit cost of \$100 per peak watt is assumed possible and was the most optimistic projection in a recent NASA report.[27]

Table 7.5. Code results for SPS missions using near-term advanced SPP and energy storage technology[a]

Variable	Description	Mission			
		LEO-I	LEO-II	HEO-I	HEO-II (GEO)
	Inputs				
HORB	Orbit altitude, km	450	600	6,000	36,000
NYRS	Duration of mission, years	10	10	10	10
IES	Energy storage flag	1	1	1	1
IDRAG	Drag calculation flag	1 (on)	1	1	1
IRAD	Radiation damage flag	1 (on)	1	1	1
KSA	Solar PV panel specific power, W/kg	240	240	240	240
PA	SPP areal density, W/m^2	140	140	140	140
FCDENS	Fuel cell energy density, W-h/kg				
EDENS	Battery energy density, W-h/kg	33	33	33	33
CSA	Space qualified SPP unit cost, $/peak W	450	450	450	450
CBATT	Battery unit cost, $/W-h	60	60	60	60
CRFC	Fuel cell unit cost, $/W-h				
CSHUTL	Shuttle launch cost, $/kg	2,640	2,640	2,640	2,640
COTV	Booster stage cost, $M	0	0	20	20
PDES	Demand power load, W	54,100	276,500	109,200	43,200
	Outputs				
	Power requirements				
PREQ	Peak SPP power requirement, W	116,505	603,933	1,328,198	56,065
PDFK	Performance degradation factor, EOL/BOL	0.955	0.910	0.114	0.872
PBREQ	Battery energy storage requirement, W-h	97,095	490,304	264,765	150,212
PFCREQ	Fuel cell energy storage requirement, W-h				
ASA	SPP area requirement, m^2	832	4,314	9,487	401
	Specific power				
KRES	Energy storage system specific power, W/kg	19.3	19.5	17.6	10.0
KTOT	Total power system specific power, W/kg	14.0	14.1	8.5	8.4
	Payload masses				
MSA	SPP mass, kg	485	2,516	5,534	234
MES	Energy storage system mass, kg	2,942	14,858	6,508	4,552
MAUX	Power conditioning system mass, kg	438	2,212	874	346
MTOT	Total power system mass, kg	3,860	19,586	12,915	5,131

Table 7.5 (continued)

Variable	Description	Mission			
		LEO-I	LEO-II	HEO-I	HEO-II (GEO)
	Payload masses (continued)				
MBOOST	LEO to HEO boost fuel and engine, kg	0	0	13,082	20,863
MREBOO	LEO reboost fuel, kg	20,301	3,328	0	0
MPLOAD	Nonpower payload, kg	7	4	3	6
PLOAD	Total shuttle bay payload, kg (include MTOT above)	24,168	22,918	26,000	26,000
	Mission considerations				
F	Shadow factor	0.384	0.367	0.172	0.048
PER	Orbital period, h	1.56	1.61	3.80	24.10
DRAG	Reboost fuel consumption, lb/ft^2/year	0.5	0.016	0	0
	Power system costs				
CARRAY	SPP total cost, $M	52.4	271.8	597.7	25.2
CES	Energy storage system cost, $M	5.8	29.4	12.9	9.0
CAUX	Power conditioning system cost, $M	<<0.1	<<0.1	<<0.1	<<0.1
CMTOT	Total power system cost, $M	58.2	301.2	610.6	34.2
	Launch costs (all in $M)				
CSHUTT	Shuttle transport of power system	10.2	51.7	34.1	13.5
CREBOO	Reboost propellant manufacturing cost	0.2	<<0.1	0	0
CLRB	Shuttle transport of reboost fuel and engine	53.6	8.8	0	0
CBOOST	Manufacturing cost of boost propellant and tanks	0	0	0.3	0.4
CSTAGE	Manufacturing cost of booster stage	0	0	20.0	20.0
CCENSH	Shuttle transport of booster and propellant	0	0	34.5	55.1
CLHTOT	Total launch cost	64.0	60.5	88.9	89.1
	Unit costs (in terms of demand power)				
CMPOW	Total power system, $/W	1,077	1,089	5,591	793
CLWATT	Launch, $/W	1,183	219	814	2,061
CTWATT	Total, $/W	2,260	1,308	6,405	2,854

[a]Thin Si PV cells; NiH_2 batteries for energy storage.

Use of advanced regenerative fuel cells (RFCs) may allow the energy storage system to achieve a higher specific power of 15 to 30 W/kg as opposed to the 3 to 20 W/kg for battery systems. A space-qualified unit cost of $100/W is considered possible. Launch costs are assumed to be the same as the previous two technology scenarios.

Table 7.6 shows the inputs and results for the advanced technology case. As expected, the higher overall power system specific power value drives the unit power cost down and increases the possible maximum power payload.

Figure 7.1 shows the maximum power payload as a function of altitude for all three technology scenarios. The largest payloads are available at high LEO, low drag orbits. At HEO orbits, for which a booster stage is required, the increasing booster and propellant weights reduce the mass available for the power satellite. As expected, the advanced SPP technology allows the greatest power payloads.

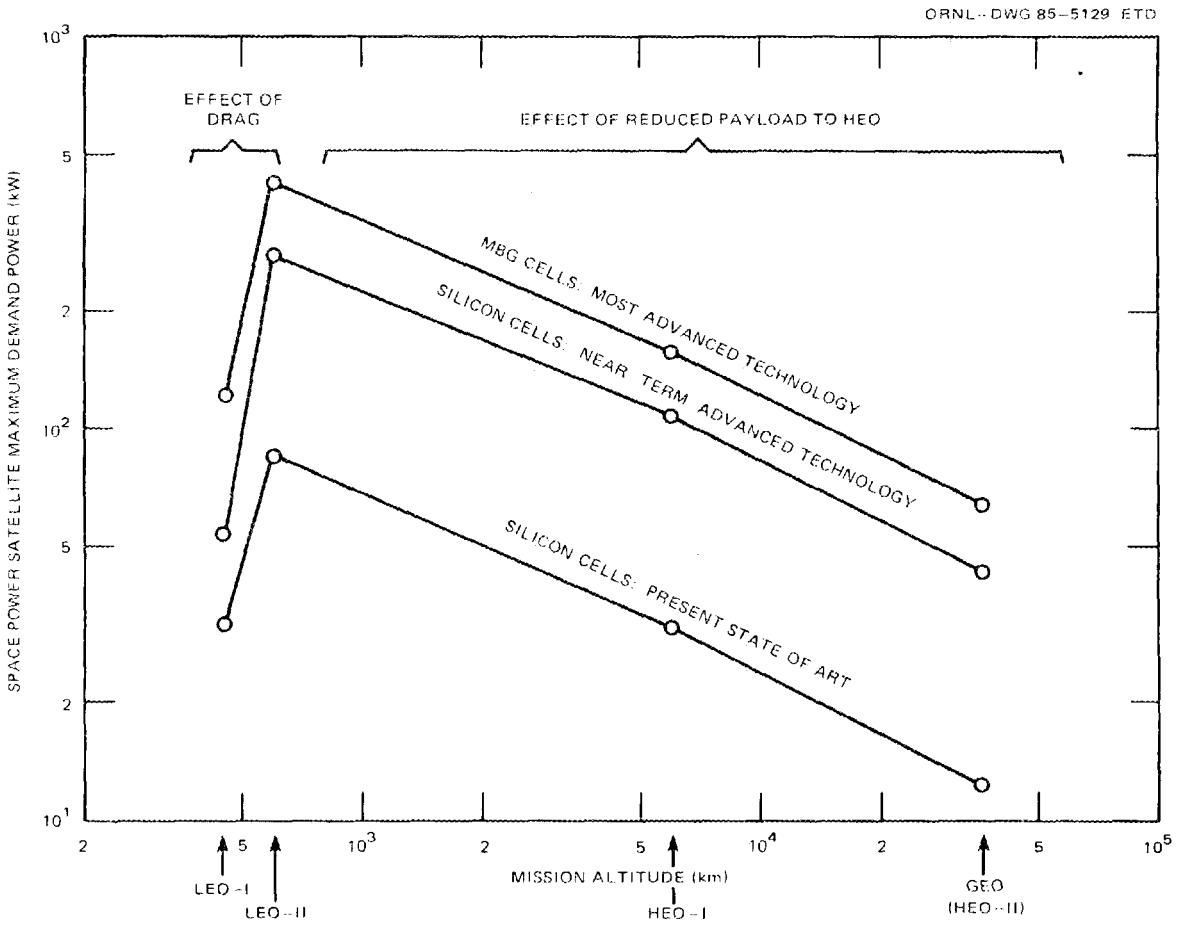

Fig. 7.1. Maximum space power satellite demand power load as a function of mission orbital altitude.

Table 7.6. Code results for SPS missions using most advanced SPP and energy storage technology[a]

Variable	Description	Mission			
		LEO-I	LEO-II	HEO-I	HEO-II (GEO)
	Inputs				
HORB	Orbit altitude, km	450	600	6,000	36,000
NYRS	Duration of mission, years	10	10	10	10
IES	Energy storage flag	2 (RFC)	2	2	2
IDRAG	Drag calculation flag	1 (on)	1	1	1
IRAD	Radiation damage flag	1 (on)	1	1	1
KSA	Solar PV panel specific power, W/kg	300	300	300	300
PA	SPP areal density, W/m^2	300	300	300	300
FCDENS	Fuel cell energy density, W-h/kg	18	18	18	18
EDENS	Battery energy density, W-h/kg				
CSA	Space qualified SPP unit cost, $/peak W	100	100	100	100
CBATT	Battery unit cost, $/W-h				
CRFC	Fuel cell unit cost, $/W-h	100	100	100	100
CSHUTL	Shuttle launch cost, $/kg	2,640	2,640	2,640	2,640
COTV	Booster stage cost, $M	0	0	20	20
PDES	Demand power load, W	124,500	430,400	155,000	64,000
	Outputs				
	Power requirements				
PREQ	Peak SPP power requirement, W	222,195	784,950	1,725,194	80,963
PDFK	Performance degradation factor, EOL/BOL	0.955	0.910	0.114	0.872
PBREQ	Battery energy storage requirement, W-h				
PFCREQ	Fuel cell energy storage requirement, W-h	78,206	267,122	106,694	77,888
ASA	SPP area requirement, m^2	741	2,617	5,751	270
	Specific power				
KRES	Energy storage system specific power, W/kg	30.1	30.5	27.5	15.5
KTOT	Total power system specific power, W/kg	20.5	20.6	12.5	12.5
	Payload masses				
MSA	SPP mass, kg	741	2,617	5,751	270
MES	Energy storage system mass, kg	4,345	14,840	5,926	4,327
MAUX	Power conditioning system mass, kg	996	3,443	1,240	512
MTOT	Total power system mass, kg	6,081	20,900	12,918	5,109

Table 7.6 (continued)

Variable	Description	Mission			
		LEO-I	LEO-II	HEO-I	HEO-II (GEO)
	Payload masses (continued)				
MBOOST	LEO to HEO boost fuel and engine, kg	0	0	13,082	20,863
MREBOO	LEO reboost fuel, kg	18,068	2,019	0	0
MPLOAD	Nonpower payload, kg	19	0	0	28
PLOAD	Total shuttle bay payload, kg (include MTOT above)	24,168	22,918	26,000	26,000
	Mission considerations				
F	Shadow factor	0.384	0.367	0.172	0.048
PER	Orbital period, h	1.56	1.61	3.80	24.10
DRAG	Reboost fuel consumption, lb/ft^2/year	0.5	0.016	0	0
	Power system costs				
CARRAY	SPP total cost, $M	22.2	78.5	172.5	8.1
CES	Energy storage system cost, $M	7.8	26.7	10.7	7.8
CAUX	Power conditioning system cost, $M	<<0.1	<<0.1	<<0.1	<<0.1
CMTOT	Total power system cost, $M	30.0	105.2	183.2	15.9
	Launch costs (all in $M)				
CSHUTT	Shuttle transport of power system	16.1	55.2	34.1	13.5
CREBOO	Reboost propellant mfg cost	0.2	<<0.1	0	0
CLRB	Shuttle transport of reboost fuel and engine	47.7	5.3	0	0
CBOOST	Manufacturing cost of boost propellant and tanks	0	0	0.3	0.4
CSTAGE	Manufacturing cost of booster stage	0	0	20.0	20.0
CCENSH	Shuttle transport of booster and propellant	0	0	34.5	55.1
CLHTOT	Total launch cost	64.0	60.5	88.9	89.0
	Unit costs (in terms of demand power)				
CMPOW	Total power system, $/W	241	245	1,182	248
CLWATT	Launch, $/W	514	141	574	1,390
CTWATT	Total, $/W	755	386	1,756	1,638

[a]MBG solar cells; fuel cells for energy storage, optimistic unit cost.

7.3 Some Comments on Economy of Scale

In Ref. 5 it is claimed that a three order-of-magnitude increase in the market for space solar arrays would decrease unit cost by a factor of 30 to ~$20/W (demand power, space qualified) without major changes in materials or manufacturing processes. If such panels were being mass produced by the thousands in a common size for one application, such a reduction might be possible. Presently each satellite application requires its own custom design and qualification procedures. Such mission-dedicated construction methods and their associated high overheads do not allow significant economies of scale. With SDI applications it is possible that many identical satellites will be launched, thus the possibility for unit cost reduction exists.

7.4 References

1. G. M. Hanley, "Evolution of Satellite Power System (SPS) Concepts," Proceedings of the 13th Intersociety Energy Conversion Engineering Conference (IECEC-78), August 1978.

2. J. A. Scott et al., "The Application of DOE Solar Cell and Array Technology to Space Power," IECEC-80, Paper No. 809070, August 1980.

3. J. W. Geis, "Concentrating Photovoltaics," A Viable Candidate for the Next Generation of Air Force Satellite Power Systems, OH, IECEC-80, Paper No. 809073, August 1980.

4. W. G. Woodcock III and J. A. Mann, "Multi-hundred Kilowatt Solar Array for Space," IECEC-80, Paper No. 809271, August 1980.

5. J. Scott-Monck and P. Stella, "Factors Governing Photovoltaic Technology Transfer: Terrestrial to Space," *J. of Energy (AIAA)* (January—February 1980).

6. G. Rusolowski, "Economic Analysis of the Design and Fabrication of a Space Qualified Power System," Report No. NASA-TM-81418, NASA, Lewis Research Center.

7. J. R. Onffrey et al., "High Efficiency Spectrophotovoltaic Systems for Orbital Power Generation," *J. of Energy (AIAA)* (January — February 1980).

8. C. J. Souza, "Low Cost Space Shuttle Power Extension Package: Solar Array Design," *J. of Energy (AIAA)* (January—February 1980).

9. R. J. DeYoung et al., "Laser and Solar Photovoltaic Space Power System Comparison — Part II," IECEC-82, August 1982.

10. M. E. Cohen, "High Power Requirements," *Proceedings of the AFOSR Special Conference on Prime-Power for High Energy Space Systems, Norfolk, VA, 22—25 February 1982*, Vol. I, February 1982.

11. R. Barthelemy et al., "Spacecraft Power Technology," IECEC-82, Paper No. 829037, August 1982.

12. D. E. Rockey et al., "Comparison of Evolving Photovoltaic and Nuclear Power Systems for Earth Orbital Applications," IECEC-82, Paper No. 829011, August 1982.

13. H. Lan and J. Oppenheim, "Comparative Analyses of Energy Storage for the Space Station," IECEC-83, Paper No. 839157, August 1983.

14. A. Sorensen, "Space Station Electrical Power Systems Technology," IECEC-84, Paper No. 849338, August 1984.

15. W. E. Simon, "Electrical Power System for the Space Station," IECEC-84, Paper No. 849301, August 1984.

16. A. Manzo et al., "A 37.5 kW Design Comparison of the NiCd Battery, Bipolar NiH_2 Battery, and Regenerative H_2-O_2 Fuel Cell Energy Storage Subsystem for Low Earth Orbit," IECEC-84, Paper No. 849241, August 1984.

17. D. Buden et al., "Space Reactors — What is a Kilogram?" IECEC-84, Paper No. 849024, August 1984.

18. J. Scott Monck and P. Stella, "Recent Developments in High Performance Planar Solar Array Technology," IECEC-84, Paper No. 849005, August 1984.

19. R. Barthelemy et al., "Satellite Power System Technology," IECEC-84, Paper No. 849389, August 1984.

20. J. W. Yerkes, "Photovoltaics, The Next 10 Years," IECEC-84, Paper No. 849294, August 1984.

21. H. M. Healy, "Evaluation of Station, Tracking, Concentrating Photovoltaic System Design for an Intermediate Size Photovoltaic Project in Florida," IECEC-85, Paper No. 859477, August 1984.

22. J. Scott-Monck and P. Stella, "Current Status of Advanced Solar Array Technology Development," IECEC-85, Paper No. 859046, August 1985.

23. A. Sorensen and G. Reppucci, "Space Station Power System Challenges," IECEC-85, Paper No. 859086, August 1985.

24. R. J. Giudici, "Space Station Power System Issues," IECEC-85, Paper No. 859088, August 1985.

25. P. W. Richardson, F. Q. Miller, and M. N. White, "Design, Performance and Life-Cycle Cost Relationships for a 500 kW Space Solar Array," IECEC-80, Paper No. 809272, August 1980.

26. "New Shuttle Pricing Policy Readied for President," *Aviation Week and Space Technology*, p. 17 (July 15, 1985).

27. NASA Space Systems Technology Model; Volume IIA: Space Technology Trends and Forecasts, National Aeronautics and Space Administration, Washington, DC, 1984.

8. CONCLUSIONS

It should again be remembered that this was a scoping study not meant to calculate design requirements or detailed costs for a specific mission. The intent was to investigate the technical and economic issues involved in the use of solar photovoltaic panels as a source of steady state space power in a dedicated, shuttle-deliverable space power satellite that can service other civilian or military payloads.

The following conclusions are presented

1. For LEOs in the 300 to 500-km range, the atmospheric drag associated with high area solar panels is a major mission consideration. The mass and cost of a reboost engine and propellant can be significant and, if launched in the same bay as the power system, can greatly reduce the mass and space available for the latter. If a solar dynamic system (using solar reflectors that focus the sun's rays to a heat engine) were available, the drag area could be greatly reduced. The use of nuclear power systems would have an even larger drag reduction effect.

2. For HEOs in the 3,000 to 20,000-km range, the Van Allen belt radiation due to the interaction of the solar wind and earth's magnetosphere is capable of damaging solar panels and decreasing their output. The need to overdesign the panels to achieve a desired EOL power level increases costs and reduces useful payload.

3. As larger HEOs are specified, the shuttle payload space and mass available for an SPS decreases. This is the result of the need to carry a booster stage (OTV) and propellant for transfer from LEO to HEO.

If the shuttle bay is assumed dedicated to the SPS mission, the cost per watt ultimately depends on the fraction of the SPS payload mass dedicated to EOL power production as opposed to reboost and boost operations. The power production fraction is greatest for missions at high LEOs for which drag is small and OTV boost is not needed.

5. As the period a satellite spends in darkness increases (as it does with altitude), the capacity of the energy storage system must also increase. Payload and cost penalties are thus incurred.

6. Power system unit costs (not including launch) significantly less than $1000 demand-watt are possible with advanced SPP and advanced energy storage technology.

7. In the absence of reboost or OTV payloads, launch costs approaching $140/W are theoretically possible for a shuttle payload unit launch cost of $2640/kg and an overall power system specific power of 30 W/kg.

8. This report did not consider the vulnerability of SPPs to external threats such as micrometeorites, launched projectiles, laser

beams, man-made ionizing radiation, etc. The large areas of the solar panels required makes the SPS more vulnerable than more easily hardened power systems such as RTGs or fission reactors. Reference 3 in Chap. 7 deals with methods for hardening SPPs.

9. The technological risk associated with SPPs is low. They have served very reliably in most U.S. civilian and military space programs to date. Their increasing size, associated with greater power demands, limits their size to significantly <1 MW demand power for military missions (shuttle deliverable). Even for >100-kW applications, the drag and vulnerability problems associated with SPPs make nuclear space power systems more attractive.

9. POSSIBLE FUTURE STUDIES

Solar photovoltaic panels presently enjoy the status of being the most frequently utilized space energy conversion technology. Other systems, however, are under consideration and are certainly amenable to the type of parametric economic analysis described in this report.

Among the solar concepts that might be considered is a solar dynamic system using parabolic reflectors, a heat engine cycle, and an advanced energy storage system. These are some of the concepts being considered by NASA for its space station project.

Other energy conversion technologies amenable to economic assessment are thermoelectrics, thermionics, and heat engine cycles in tandem with nuclear (isotopic or fission) heat sources.

Appendix A. LIST OF ACRONYMS

BOL	Beginning of life
BMD	Ballistic missile or defense
C^3I	Command, Control, Communications & Information
EOL	End of life
G&A	General and Administrative
GEO	Geosynchronous earth orbit
HEDRB	High energy density rechargeable battery
HEO	High earth orbit
IECEC	Intersociety Energy Conversion Engineering Conference
JPL	Jet Propulsion Laboratory
LEO	Low earth orbit
LO_2	Liquid oxygen
LH_2	Liquid hydrogen
MBG	Multi-bandgap
M&L	material and labor
NASA	National Aeronautics Space Administration
O&M	Operating & Maintenance
OTV	Orbital transfer vehicle
PV	Photovoltaic
R&D	research & development
RFC	Regenerative fuel cell
RTG	Radioisotope thermoelectric generator
SDI	Strategic defense initiative
SPP	Solar photovoltaic panel
SPS	Space power satellite

Appendix B. CODE LISTING

The FORTRAN computer code discussed in Section 6 is listed on the following pages. The MAIN has both design and cost algorithms. SUBROUTINE RADI calculates the performance degradation due to solar cell radiation damage by use of interpolation routines which fit the user specified data within the data of Ref. 1, Chap. 6. The actual interpolation calculation is performed by proprietary routines in the system software library (subroutines E01ACE and E01AAE) for which the listings are not available.

```
C*********SPACE POWER SYSTEM WITH SOLAR ARRAYS & ENERGY STORAGE*****
      REAL KSA,KRES,MSA,MES,MTOT,KTOT,MREECC,MAUX,KINV,KGM2,MPLOAD,
     *KAUX,MBOOST,MSHUTT,NYRS
      NAMELIST/IN/PDES,NYRS,IES,KSA,PA,FCDENS,HORB,EDENS,CSHUTL,COTV,
     *CSA,CBATT,CRFC,IRAD,IDRAG
      PI=3.14159
  111 READ(5,IN,END=444)
      WRITE(6,356)
  356 FORMAT(1H1)
      WRITE(6,IN)
      IF(IRAD.NE.1) GO TO 401
      IF(IRAD.EQ.1) CALL RADI(NYRS,KSA,HORB,PDFK)
      GO TO 402
  401 PDFK=1.
  402 IF(PDFK.GT.1.0) PDFK=1.0
C START WITH DESIRED POWER LOAD
      WRITE(6,99)
   99 FORMAT(' *****SPACE POWER SYSTEM USING SOLAR',
     *' ARRAYS & ENERGY STORAGE*****',//' INPUT DATA',/)
      WRITE(6,100)PDES
  100 FORMAT(' DESIRED EOL  POWER IN WATTS:',F8.0)
      WRITE(6,50)NYRS
   50 FORMAT(' DESIRED YRS OF OPERATION:',2X,F6.0)
      WRITE(6,250) IES
  250 FORMAT(' TYPE OF STORAGE:1=BATTERY, 2=FUEL CELL:  IES= ',I2)
      WRITE(6,350) KSA
  350 FORMAT(' SOLAR ARRAY SPECIFIC POWER,W/KG:  ',F6.1)
      WRITE(6,450)PA
  450 FORMAT(' SOLAR ARRAY WATTS/M**2  : ',F6.1)
      WRITE(6,210) FCDENS
  210 FORMAT(' FUEL CELL ENERGY DENSITY, W-HR/KG : ',F6.1)
      WRITE(6,200)HORB
  200 FORMAT(' ORBIT HEIGHT IN KM: ',F10.0)
      IF(IES.EQ.1)WRITE(6,650) EDENS
  650 FORMAT(' BATTERY ENERGY DENSITY, W-HR/KG : ',F6.1)
      WRITE(6,655)CSHUTL
  655 FORMAT(' SHUTTLE LAUNCH COST TO LEO,$/KG : ',F7.0)
      WRITE(6,657) COTV
  657 FORMAT('  BOOSTER (OTV) STAGE COST, $M : ',-6PF7.0)
      WRITE(6,660)CSA
  660 FORMAT(' SOLAR ARRAY COST PER WATT INCL. STRUCTURES:  ',F6.0)
      WRITE(6,665)CBATT
  665 FORMAT(' BATTERY COST PER W-HR : ',F6.1)
      WRITE(6,666)CRFC
  666 FORMAT(' FUEL CELL COST PER W-HR : ',F6.1)
C
C****CALCULATIONS******
C  CALCULATE SHADOW FACTOR
      REARTH=6378.
      F=(ASIN(REARTH/(REARTH+HORB)))/PI
      WRITE(6,455)
  455 FORMAT(' ',/,' ***OUTPUT DATA***',/)
      WRITE(6,55)HORB,PDFK
   55 FORMAT(' EOL/BOL PERFORMANCE DEGRADATION FACTOR DUE TO ',/,
     *' VAN-ALLEN BELT RADIATION DAMAGE AT ',F8.0,' KM ALT: ',
     *F7.3,/)
      WRITE(6, 300)F
  300 FORMAT(' SHADOW FACTOR= ',F6.3)
```

```
C CALCULATE ORBITAL PERIOD
      PER=(2.*PI*(1000.*(REARTH+HORB))**1.5)/(1.9977E7*3600.)
      WRITE(6,400)PER
  400 FORMAT(' ORBITAL PERIOD IN HOURS= ',F6.2,/)
C  BATTERY:DEPTH OF DISCHARGE
      DOD=0.35
C BATTERY: CHARGE TO DISCHARGE EFFICIENCY
      CDEFF=.65
C CONDITIONING AND CABLING LOSS FACTOR:
      Q=1.05
C  POWER CONDITIONING EQT SPECIFIC POWER(W/KG)
      KAUX=125.
C POWER CONDITIONING EQT MASS
      MAUX=PDES/KAUX
C SOLAR ARRAY REQT FOR BATTERY SYSTEM:
      IF(IES.EQ.1)  PREQ=Q*(PDES/PDFK)*(1.+(F/(CDEFF*(1.-F))))
C SOLAR ARRAY REQT FOR FUEL CELL ENERGY STORAGE SYSTEM
      IF(IES.EQ.2)  PREQ=Q*(PDES/PDFK)*(1.+(F/(1.-F)))
C MASS OF SOLAR ARRAY:
      MSA=PREQ/KSA
C MASS OF SOLAR ARRAY PER UNIT AREA in KG/M**2
      KGM2=PA/KSA
C  AREA OF SOLAR ARRAYS
      ASA=PREQ/PA
C AREA OF SOLAR ARRAYS IN FT**2
      ASAF=ASA*3.28**2
C REQD ENERGY, MASS & SPECIFIC POWER OF OF ENERGY STORAGE SYSTEMS
C     BATTERIES
      PBREQ=PDES*Q*F*PER/DOD
      IF(IES.EQ.1) MES=PBREQ/(EDENS)
C     FUEL CELLS
      PFCREQ=PDES*Q*F*PER
      IF(IES.EQ.2) MES=PFCREQ/FCDENS
      IF(IES.EQ.1)KRES=PBREQ*DOD/(F*PER*MES)
      IF(IES.EQ.2)KRES=PFCREQ/(MES*F*PER)
C TOTAL MASS OF POWER SYSTEM
      MTOT=MES+MSA+MAUX
C TOTAL SPECIFIC POWER IN TERMS OF DESIRED LOAD POWER
      KTOT=PDES/MTOT
C INVERSE SPECIFIC POWER IN KG/KW
      KINV=1000./KTOT
C  REBOOST FUEL REQUIREMENTS DUE TO LOW ALT ORBITAL DRAG ON ARRAYS
      DRAG=0.
      IF(IDRAG.EQ.1.AND.HORB.LT.1000.)
     *DRAG=0.5*(10.**((450.-HORB)/100.))
      IF(HORB.LE.1000.) MREBOO=DRAG*NYRS*ASAF/2.205
C  SHUTTLE PAYLOAD ADJUSTED FOR CENTAUR BOOST TO POSSIBLE HEO
      PLOAD=1.E4*(5.07-ALOG10(HORB))
C  NON-POWER, NON-BOOST PAYLOAD
      MPLOAD=PLOAD-MTOT-MREBOO
C ***   COST CALCULATIONS  ****
C
C   POWER SYSTEM MFG. COSTS
C       SOLAR ARRAYS
      CARRAY=CSA*PREQ
C       ENERGY STORAGE:BATTERIES
```

```
      IF(IES.EQ.1)CES=CBATT*PBREQ
C       ENERGY STORAGE: REGEN FUEL CELLS
      IF(IES.EQ.2) CES=CRFC*PFCREQ
C       POWER SYST. AUXILIARIES
      CAUX=10.*MAUX
C   TOTAL POWER SYST MFG COST
      CMTOT=CARRAY+CES+CAUX
C   UNIT COSTS: POWER
      CMPOW=CMTOT/PDES
C   UNIT COST:  WEIGHT
      CMKG=CMTOT/MTOT
C  POWER SYSTEM LAUNCH COSTS
C    SHUTTLE TRANSPORT: EARTH TO LEO
      CSHUTT=CSHUTL*MTOT
C    COST FOR REBOOST FUEL IN LEO
      CREBOO=MREBOO*10.
C    COST FOR SHUTTLE TRANSPORT OF REBOOST FUEL(LEO ONLY)
      CIRB=CSHUTL*MREBOO
C   MASS OF BOOSTER STAGE, TANKAGE & FUEL
      MBOOST=0.
      IF(HORB.GT.600.) MBOOST=26000.-PLOAD
C    COST TO BOOST POWER SYSTEM& BOOSTER FROM LEO TO HEO(FUEL&TANKAGE)
      CBOOST=20.*MBOOST
C   BOOSTER(OTV) STAGE MFG &QUAL COST
      CSTAGE=0.
      IF(HORB.GT.600) CSTAGE=COTV
C  COST TO SHUTTLE TRANSPORT CENTAUR BOOSTER&FUEL TO LEO
      CCENSH=MBOOST*CSHUTL
C    TOTAL SHUTTLE PAYLOAD
      MSHUTT=MTOT+MREBOO+MBOOST+MPLOAD
C    TOTAL LAUNCH COSTS
      CLHTOT=CSHUTT+CREBOO+CLRB+CBOOST+CSTAGE+CCENSH
C    LAUNCH COST PER WATT
      CLWATT=CLHTOT/PDES
C   TOTAL COST PER KG FOR POWER SYSTEM INCL LAUNCH COSTS
      CUPOW=CLHTOT/MTOT
      WRITE(6,460)PREQ
  460 FORMAT(' SOLAR ARRAY POWER REQT IN WATTS:',F9.0)
C  TOTAL SPACE POWER UNIT COST
      CTWATT=CLWATT+CMPOW
      WRITE(6,480)ASA,ASAF
  480 FORMAT(' AREA OF SOLAR ARRAYS, SQ.METERS= ',F8.1,' SQ.FT= ',F8.1)
      WRITE(6,485)KGM2
  485 FORMAT(' SOLAR ARRAY KG/M**2  ',F6.2,/)
      WRITE(6,471)PBREQ
  471 FORMAT(' BATTERY  ENERGY IN TERMS OF REQT, W-HR ',F11.2)
      WRITE(6,472)PFCREQ
  472 FORMAT(' FUEL CELL ENERGY IN TERMS OF REQT, W-HR ',F9.2)
      WRITE(6,505)KRES
  505 FORMAT(' EN STOR SP. POWER FOR REQD POWER, W/KG ',F6.2,/)
      WRITE(6,470)MSA
  470 FORMAT(' MASS OF SOLAR ARRAYS IN KG',F10.1)
      WRITE(6,490)MES
  490 FORMAT(' MASS OF ENERGY STORAGE SYSTEM IN KG ',F10.1)
      WRITE(6,491)MAUX
  491 FORMAT(' MASS OF POWER AUXILIARIES IN KG ',F10.1)
      WRITE(6,510)MTOT
  510 FORMAT(' TOTAL MASS OF POWER SYST. IN KG ',F10.1,/)
      WRITE(6,520)KTOT
```

```
520 FORMAT(' TOTAL POWER SYSTEM SP POWER IN W/KG (DES LD) ',F10.1)
    WRITE(6,530)KINV
530 FORMAT(' TOTAL POWER SYSTEM INV.SPEC.POWER IN KG/KW ',F6.2,/)
    WRITE(6,531)DRAG
531 FORMAT(' ATMOS. DRAG: LB.REBOOST FUEL/YR/FT2 S.A. :',F12.6)
    WRITE(6,620)MREBOO
620 FORMAT(' REBOOST FUEL PAYLOAD FOR SOLAR ARRAYS IN LEO ',F8.1)
    WRITE(6,770)PLOAD
770 FORMAT(' SHUTTLE P.L. AVAIL INCL EFF OF HEO BOOST: ',F6.0,' KG')
    WRITE(6,780)MPLOAD
780 FORMAT(' NON-POWER, NON-BOOST PAYLOAD ',F8.0,' KG')
    WRITE(6,801)
801 FORMAT(' ',//,' *** COST OUTPUT ***',//)
    WRITE(6,802)PREQ,CSA,CARRAY
802 FORMAT('  POWER SYS MFG. COSTS:',/,' ',T5,'SOLAR ARRAYS:',
   *T30,F10.1,' W    X    ',F6.2,' $/W ',T60,'= $ ',-6PF9.3,' M')
    IF(IES.EQ.1)WRITE(6, 803)PBREQ,CBATT,CES
803 FORMAT(' ',T5,'BATTERIES:',T30,F10.1,' W-HR X',F6.2,' $/W-HR',
   *T60,'= $ ',-6PF9.3,' M')
    IF(IES.EQ.2)WRITE(6, 804) PFCREQ,CRFC,CES
804 FORMAT(' ',T5,'FUEL CELLS:',T30,F10.1,' W-HR X',F6.2,' $/W-HR',
   *T60,'= $ ',-6PF9.3,' M')
    WRITE(6,805) CAUX,CMTOT,CMPOW,CMKG
805 FORMAT(1H ,T5,'AUXILIARIES:',T60,'= $ ',-6PF9.3,' M',//,' ',T5,
   *'TOTAL MFG COST:',T60,'= $ ',-6PF9.3,' M',///,' ','UNIT COSTS:',//
   *' ',T15,'POWER:',T55,-0PF8.2,' $/W',//,' ',T15,'MASS:',T55,
   *-0PF8.2,' $/KG',/)
    WRITE(6,806)MTOT,MREBOO,MBOOST,MPLOAD,MSHUTT
806 FORMAT('0  LAUNCH MASSES:',//,' POWER SYSTEM',T30,F9.0,
   */,' REBOOST FUEL (LEO)',T30,F9.0,/,' BOOST STG&FUEL (LEO TO HEO)',
   *T30,F9.0,/,' OTHER AVAIL SPACE',T30,F9.0,//,' TOTAL SHUTTLE PLD.',
   *T30,F9.0,////)
    WRITE(6,807)CSHUTT,CREBOO,CLRB,CCENSB,CBOOST,CSTAGE,CLBTOT,CLWATT
807 FORMAT('  LAUNCH & ALTITUDE MAINT COSTS FOR POWER SYSTEM',//,
   *' SHUTTLE LAUNCH OF PS TO LEO',T60,-6PF10.3,' M$',/,
   *' REBOOST FUEL (LEO ONLY)',T60,-6PF10.3,' M$',/,
   *' SHUTTLE LAUNCH OF REBOOST FUEL TO LEO (LEO ONLY)',T60,-6PF10.3,
   *' M$',/,' SHUTTLE LCH OF CENT BOOST&FUEL TO LEO(HEO ONLY)',T60,
   *-6PF10.3,' M$',/,' CENT BOOST OF FUEL &TANKS FROM LEO TO HEO',T60,
   *-6PF10.3,' M$',/' CENTAUR STAGE COST(ENGINE)',T60,-6PF10.3,' $M',
   *  //,' TOTAL COST',T60,-6PF10.3,' M$',///,
   *'      LAUNCH COST PER WATT OF SPACE POWER DESIRED:',T55,-0PF7.0,
   *'  $/WATT',/)
    WRITE(6,1007) CMPOW
1007 FORMAT('      MFG.&QUAL.COST PER WATT OF SPACE POWER DESIRED',
   *T55,-0PF7.0,'  $/WATT',/)
    WRITE(6,907)CTWATT
907 FORMAT('   TOTAL COST PER WATT OF SPACE POWER DESIRED; ',T55,
   *F7.0,'  $/WATT',///)
    WRITE(6,908)CUPOW
908 FORMAT('   TOTAL COST PER KG FOR POWER SYSTEM: ',T55,F7.0,
   *'  $/KG',//)
    GO TO 111
444 WRITE(6,999)
999 FORMAT('0 END OF RUN',//)
    STOP
    END
```

```
      SUBROUTINE RADI(NYRS,KSA,HORB,PDFK)
      REAL KSA,NYRS
      DIMENSION X(9),Y(3),F(9,3),XX(9),WORK(9),AM(9),D(9),
     *F140(9,3),F60(9,3),F30(9,3),AK(3),PDF(3),C(3)
      DATA X/299.,1000.,2000.,4000.,6000.,8000.,10000.,
     *20000.,40000./
      DATA Y/.99,5.,10.01/
      DATA F140/1.,.893,.607,.286,.214,.229,.286,.786,.964,
     *1.,.786,.457,.214,.128,.143,.186,.571,.893,
     *1.,.786,.471,.128,.114,.128,.179,.643,.857/
      DATA F60/1.,.883,.650,.317,.3,.317,.367,.750,1.,
     *1.,.783,.467,.167,.15,.167,.283,.667,.967,
     *1.,.717,.4,.133,.117,.133,.167,.600,.867/
      DATA F30/1.,.933,.667,.433,.433,.5,.567,.733,1.,
     *1.,.733,.567,.3,.3,.333,.433,.733,1.,
     *1.,.733,.5,.233,.233,.333,.433,.667,.933/
      DATA XX/9*0./
      DATA WORK/9*0./
      DATA AM/9*0./
      DATA D/9*0./
      IG1=9
      M1=3
      N1=9
      IFAIL=0
      VAL=0.
      VALL=0.
      A=HORB
      B=NYRS
C   CALC PERF DEGRAD FACTOR FOR KSA=140
      WRITE(6,101)
  101 FORMAT(' **** KSA = 140 ****')
      CALL E01ACF(A,B,X,Y,F140,VAL,VALL,IFAIL,XX,
     *WORK,AM,D,IG1,M1,N1)
      PDF140=(VAL+VALL)/2
      WRITE(6,100)A,B,X,Y,F140,VAL,VALL,IFAIL,XX,
     *WORK,AM,D,IG1,M1,N1,PDF140
  100 FORMAT('0 INTERPOLATION RESULTS:',/,' A= ',F10.0,
     *'  B= ',F5.0,/,' X-ARRAY: ',9(2X,F10.0),/,
     *' Y-ARRAY: ',3(2X,F5.0),/,' FUNCTION GRID:'/,
     *' ',9(2X,F7.3),/,' ',9(2X,F7.3),/,' ',9(2X,F7.3),/,
     *' VAL = ',F7.4,'   VALL = ',F7.4,/,
     *' IFAIL = ',I1,/,' XX-ARRAY: ',9(1X,F10.2),/,
     *' WORK ARRAY: ',9(1X,F10.2),/,
     *' AM ARRAY: ',9(1X,F10.2),/,
     *' D-ARRAY: ',9(1X,F10.2),/,
     *' IG1= ',I3,'    M1=  ',I2,'  N1= ',I2,/,
     *' PDF = ',F7.4,///)
C   CALC PERF DEGRAD FACTOR FOR KSA=60
      WRITE(6,102)
  102 FORMAT(' **** KSA = 60 ****')
      CALL E01ACF(A,B,X,Y,F60,VAL,VALL,IFAIL,XX,
     *WORK,AM,D,IG1,M1,N1)
      PDF60=(VAL+VALL)/2.
      WRITE(6,100)A,B,X,Y,F60,VAL,VALL,IFAIL,XX,
     *WORK,AM,D,IG1,M1,N1,PDF60
```

```
C    CALC PERF DEGRAD FACTOR FOR KSA=30
      WRITE(6,103)
  103 FORMAT(' **** KSA = 30 ****')
      CALL E01ACE(A,B,X,Y,F30,VAL,VALL,IFAIL,XX,
     *WORK,AM,D,IG1,M1,N1,PDF30)
      PDF30=(VAL+VALL)/2.
      WRITE(6,100)A,B,X,Y,F30,VAL,VALL,IFAIL,XX,
     *WORK,AM,D,IG1,M1,N1,PDF30
      AK(1)=30.
C   NOW INTERPOLATE K-VALUES:
      AK(2)=60.
      AK(3)=140.
      PDB(1)=PDF30
      PDB(2)=PDF60
      PDB(3)=PDF140
      NN1=3
      NN=2
      NN2=3
      XXX=KSA
      IF(XXX.GT.140) GO TO 208
      C(1)=0.
      C(2)=0.
      C(3)=0.
      WRITE(6,104) KSA
  104 FORMAT(' **** KSA = ',F6.0,' ****')
      CALL E01AAE(AK,PDB,C,NN1,NN2,NN,XXX)
      PDFK=C(3)
      GO TO 209
  208 PDFK=PDF140
  209 CONTINUE
      WRITE(6,200)AK,PDB,C,NN1,NN2,NN,XXX,PDFK
  200 FORMAT('0 KSA INTERPOLATION:',/,' AK-ARRAY: ',
     *3(4X,F8.0),/,' PDB-ARRAY: ',3(3X,F10.4),/,
     *' C-ARRAY: ',3(4X,F10.4),/,
     *' NN1= ',I2,'    NN2= ',I2,'   NN= ',I2,/,
     *' XXX VALUE: ',F6.0,/,
     *' PDFK: ',F8.4,//)
      RETURN
      END
```

Appendix C. PROJECTIONS OF RANGES FOR SATELLITE LAUNCH COSTS IN LOW AND GEOSYNCHRONOUS EARTH ORBIT

Purpose

Although system architecture for the proposed Ballistic Missile Defense (BMD) associated with the Strategic Defense Initiative (SDI) has not yet been defined, a few "back-of-the-envelope" attempts have been made to estimate BMD deployment costs. The popular (newspaper and news magazine) and technical (Discover, IEEE Spectrum, Aviation Week and Space Technology, Physics Today) print media have included total system cost estimates which range from 10^{10} to 2×10^{12} dollars.[1-10] It should be noted that estimates, at this point in the SDI program, are often used to defend or oppose an author's or expert's opinion on proceeding with further SDI research.

Since the types of space hardware and the numbers required are not yet defined, it is pointless to try to generate even a rough estimate on the total cost of all the required satellites. To give a feeling for the order of magnitude of unit mass or specific costs for hardware, however, one can consider the two recent hardened military communication satellites launched by the Shuttle Orbiter Atlantis. At ~$100 million each and likely masses of a few metric tons each, one is talking about nonlaunch costs of $20,000 to 50,000 per kilogram for high-technology space qualified electronic hardware.

Launch costs will constitute a major portion of the total cost for a BMD system. There is enough data on launch costs available in the literature that one can arrive at somewhat better than order of magnitude estimates on unit specific launch costs. (Specific costs are used since the number of total launches and payload masses required are not known.) The derivation of these specific payload launch costs is the subject of this appendix.

Launch Vehicles and Costs

The unit cost to orbit a kilogram depends heavily on the desired orbit and the nature of the transporter vehicle. For BMD applications the two most common orbits are likely to be the low earth orbit (LEO) and the geosynchronous (GEO) orbit.

Low Earth Orbit (LEO): The Fletcher Committee[11] report and a Lawrence Livermore National Laboratory study[12] projected that on the order of 100 actual BMD interceptor type weapons might be placed in LEO. These orbits are reachable by the Space Shuttle Orbiter and have mean altitudes of 300 to 600 km above sea level. The maximum payload for the shuttle orbiter is on the order of 20—30 metric tons depending on altitudes and orbital inclination to the equator. (Near-Polar orbits have the smaller payloads.)

Associated with shuttle launch are both a fixed capital cost component and a mission dedicated operating cost component. The cost of the Shuttle Orbiter Vehicle can be considered a fixed cost on the order of one billion dollars per vehicle (development and engineering costs not included). Over a period of several years one can assume that 33—50 missions will be accomplished. Ignoring interest costs and distributing the Orbiter fixed cost over the above range or number of missions, a fixed cost component of $20—30 million per launch results.

The mission dedicated O&M costs include launch contractor costs, fuel, solid propellant tanks, maintenance, crew expenses, and other overheads. These may vary with the length of mission preparation and the actual mission length. A range of $40—70 million per launch is estimated for these.

One might ask why such cost projections for an already operating system are not more accurate than above. Part of the problem is that NASA and its shuttle user agencies and customers have not yet agreed on a unit payload cost to be charged to military users. A high military official was recently quoted.[16] "No one is exactly sure what it costs NASA to launch the shuttle." A pricing policy is forthcoming in 1989. Part of the difficulty in arriving at a price involves concurrence on the part of several government agencies on the write-off of Space Shuttle development, engineering, and manufacturing facilities costs against the actual users. The fact that NASA's commercial launch service is trying to remain competitive with European launch ventures such as Arianespace makes the situation even more complicated.

If the previously mentioned components of the launch cost are summed, a range of $60—100 M on total cost per launch is calculated (Table C.1). Over a payload range of 20—30 metric tons, a minimum and maximum unit launch cost of $2,000 and $5,000 per kilogram ($900—2,270/lb) results. These are considered reasonable cost range endpoints if development and engineering costs are <u>not</u> included. Table C.2 shows some shuttle launch costs found in the literature,[13-17] including some values which probably carry the development and engineering costs.

The Shuttle orbiter will remain the predominant mode of earth to LEO transport up to the year 2000. The DOD plans to remodel 12 Titan Vehicles in 1988 for use in orbiting small payloads. For large payloads, on the order of 100 metric tons, a new system will be required. A second generation Space Shuttle or a Saturn 5 type Heavy Lift Vehicle (HLV) have been suggested. No decision has yet been made on which option to pursue. Several options and their likely payloads and launch costs are discussed in References 16 and 17. Studies are underway by NASA and the USAF to attempt to define a space transportation system with projected unit launch costs a factor 10—15 lower than associated with the Shuttle/Centaur system.

Table C.1. Calculation of ranges for LEO and GEO launch costs

	Minimum ($M)*	Maximum ($M)
LEO mission launch costs (space shuttle)		
Fixed cost	20	30
Mission dedicated (O&M)	40	70
Total	60	100
Payload size (metric tons)	Minimum 20	Maximum 30
	Minimum cost ÷ Maximum payload	Maximum cost ÷ Minimum payload
Unit costs ($/kg) (range endpoints)	2,000	5,000
GEO mission launch costs (shuttle + chemical throw away OTV)		
Shuttle (earth to LEO)	60	100
OTV (chemical/centaur LEO to GEO)	20	60
Total	80	160
Payload to GEO	Minimum 3.5	Maximum 6
	Minimum cost ÷ Maximum payload	Maximum cost ÷ Minimum payload
Unit cost ($/kg) (range endpoints)	13,300	45,700
GEO mission launch costs (shuttle + nuclear electric propulsion OTV)		
Shuttle (earth to LEO)	60	100
OTV (NEP:LEO to GEO per mission)	10	40
Total	70	140
Payload (metric tons)	15	
Unit cost ($/kg)	~4,700	~9,300

*$M = millions of dollars.

Table C.2. Some literature values for space shuttle launch costs

Reference	Cost data	
(3: IEEE Spectrum)	$1200/lb	($2650/kg)
(7: Newsweek)	$3000/lb	($6600/kg)[a]
(13: Science 85)	$1800/lb	($4000/kg)
(14: Acta Astronautica)	$90M	Launch cost
(15: AAS conference)	$260M	Launch cost
(16: Military Space)	$3.1B for 12 flights ($250M/launch)[a]	
(17: Military Space)	$1500/lb	($3300/kg)
IECEC paper (same as Reference 9, Section 7)	$1000/lb	($2200/kg)
IECEC paper (same as Reference 13, Section 7)	$2640/kg	

[a]Probably includes recovery of development and engineering costs.

Geosynchronous Earth Orbit (GEO)

The geosynchronous earth orbit, at 36,000 km altitude, allows a satellite to hover over a given location on the earth's equator. For this reason GEO is utilized by communication, navigation, and surveillance satellites. For a BMD system, several satellites in this orbit or other high earth orbits (HEOs) would be required for C^3I applications or for such purposes as mentioned above. The launch to GEO (or HEO) requires a launch from earth to LEO plus a boost or transfer from LEO to HEO. An additional vehicle, often called a booster-stage, orbital transfer vehicle (OTV), or orbital transfer stage is required. Presently such OTVs are not reusable and must be carried in the shuttle bay along with the satellite payload. Starting in early 1986 Centaur-G, a chemical (LH_2-LO_2) rocket stage, will be the baseline OTV for use with the shuttle. The high thrust of a chemical OTV allows orbital transfer to be accomplished on the order of hours to days. Unfortunately the chemical OTV and its associated propellent and tanks is heavy and greatly reduces the satellite payload mass available to GEO. The OTV payload is heavily dependent on the inclination of the orbit to the earth's equator and is approximately 6,000 kg for a 28° orbit and 3,500 kg for a 70° orbit. An exact cost for a Centaur OTV has not been found; however a range of $20—60 million per launch is assumed reasonable. This cost must be added to the shuttle launch cost in order to obtain

the cost of an earth to GEO launch. Table C.1 shows the earth to GEO unit cost ranges obtained by using maximum and minimum costs. A range of $13,300/kg to $26,600/kg ($6,045 to $12,000/lb) is obtained for a 28° orbit and $22,900/kg to $45,700/kg ($10,400 to $20,800/lb) for a 70° orbit. Reference 18 quotes an earth-to-GEO cost of $10,000/kg for space station-based space transportation operations and is felt to be optimistic.

The use of a "throw-away" OTV contributes significantly to the high cost. A reusable OTV or "space-tug" would have considerable cost advantages, and R&D work is presently underway on a chemical reusable OTV. Such a vehicle would probably be Space Station based. In order to reduce the use of braking propellant on return from GEO to LEO, the use of the drag associated with the earth's upper atmosphere has been suggested as a means of "aerobraking." Another nonchemical concept, which would allow payloads as high as 15 metric tons to GEO is the use of combined nuclear power and electric or ion propulsion. In the nuclear electric propulsion (NEP-OTV) concept, the reactor (such as the SP-100) and propellant weigh considerably less than a chemical OTV and propellant. The main disadvantage of NEP is that for a small reactor such as SP-100 the time to transfer from LEO to HEO is over 100 days because of the lower thrust. This concept is one that probably will appear in the post 2000 timeframe. Table C.1 shows the reduced unit cost for earth to GEO transports if the reasonable OTV step can be accomplished for $10—40 million per mission. This cost depends on the number of missions and the total development and deployment costs. (Up to $2 billion has been estimated for development of a chemical OTV concept. An SP-100-based NEP-OTV would probably accrue similar development and deployment costs.)

Hardware Costs

Although less is known about the actual BMD space based interceptor configurations, a few comments are in order. Dr. Robert Jastrow[9] has estimated that a satellite based interceptor net of 100 devices in LEO will be needed at a cost of $1—2 billion for each satellite. If these have an average mass of 100 metric tons each, a specific cost of $10,000—20,000 per kilogram results. These hardware costs are a factor of 2 to 10 higher than the earth to LEO shuttle specific transport costs and the same order of magnitude as the earth to GEO specific launch costs. [One must assume that a heavy lift vehicle (HLV) could lift 100 metric tons from earth to LEO for a specific cost close to that of the shuttle.] Reference 16 projects that HLV launch costs will be on the order of $130—210 M per flight. Payload sizes should be considerably larger than the shuttle.

Total Costs

If launch and hardware costs are both included, specific costs for LEO based hardware would be $12,000—25,000/kg ($5,400—11,000/lb). For

GEO based hardware specific costs would range from $15,000—70,000/kg ($7,000—32,000/lb), depending on the type and cost of OTV used.

These costs are for hardware construction and launch only and do not include development, maintenance, or decommissioning costs. Since the deployment timetable is still unknown, the effects of the cost of money (interest) was not included here. All of the above factors will have an overall effect of increasing specific costs.

References

1. *Aviation Week and Space Technology*; Oct. 14, 1985; p. 22 (USAF Maj. Simon P. Worden, $10-100B).

2. *Knoxville News Sentinel*; Sunday, Sept. 30, 1985, "Perspective" Section (USAF estimate, $40B/yr to deploy between 1995—2010, gives $600B total).

3. "Star Wars/SDI: The Grand Experiment," *IEEE Spectrum*, September 1985, (p. 35: Council on Economic Priorities estimates: $800B) (p. 56: "Several hundred billion to over $1 trillion") (p. 56: "The official SDI position is that because research is still preliminary and no system has been decided upon, any discussion of cost is premature.") (p. 56: Federation of American Scientists Study, John Pike, "50B—$200B per year to maintain SDI system").

4. "Exploring the High-Tech Frontier," *TIME*, March 11, 1986 (p. 20 $60B—$1 trillion).

5. "Senators and Scientists Object to SDI Costs and Uncertainties," *Physics Today*, July 1985 (p. 55 "Might cost as much as $2 trillion).

6. *"The Star Wars Sweepstakes;" TIME*; October 7, 1985 (p. 48 "Cost from $400 billion to $1.2 trillion).

7. "The Star Warriors," *Newsweek*, June 17, 1985 (p. 41 "A Reasonable sum — $1 trillion, say.")

8. "Star Wars: Pro & Con," *Discover*, September 1985 (p. 73 Carl Sagan's comments: "The cost has been put by former secretary of defense, of both parties, as something in the neighborhood of a trillion dollars.")

9. *Defense Daily*, June 7, 1985; ("Dr. Robert Jastrow estimated Satellite based interceptor net would cost $100—200B.")

10. Carter, A. B. & Schwarz, D. (editors), *Ballistic Missile Defense*, The Brookings Institution, Washington, DC, 1984 ("Measurable utility BMD would cost at least $10 trillion.")

11. Fletcher, James C., "The Technologies for Ballistic Missile Defense," *Issues in Science and Technology*, Fall 1984, p. 19.

12. *Military Space*, Sept. 2, 1985; "LLL Strategic Defense System Project, November 1983 (says "100—200 space-based lasers could negate 1000 simultaneously launched Soviet ICBMs").

13. Stachle, R., "The Long Commute," *Science 85*, November 1985, pp. 113—114.

14. "Disposal of Nuclear Wastes in Space," Acta Astronautica, Vol. 10, No. 11, pp. 719-738, November 1983.

15. Heiss, K. P., "Space Tran: A Private Venture to Purchase an Orbiter," paper AAS 82-234, Vol. 52, *Developing the Space Frontier*, Conference, Advances in the Astronautical Sciences, American Astronautical Society, 1982.

16. News item; *Military Space*, May 13, 1985, p. 2.

17. News item; *Military Space*, June 24, 1985, p. 8

18. O'Leary, B., *Project Space Station*, Stackpole Books, 1983.

Internal Distribution

1. D. E. Bartine
2. H. I. Bowers
3. D. W. Burton
4. R. H. Cooper
5. W. G. Craddick
6. H. W. Hoffman
7. R. S. Holcomb
8. D. T. Ingersoll
9. J. E. Jones Jr.
10. D. B. Lloyd
11. J. C. Moyers
12. F. R. Mynatt
13. J. P. Nichols
14. H. Postma
15. W. L. Roberts
16. H. E. Trammell
17. C. D. West
18-42. K. A. Williams
43. G. L. Yoder
44. ORNL Patent Office
45. Central Research Library
46. Document Reference Section
47-48. Laboratory Records Department
49. Laboratory Records (RC)

External Distribution

50. S. K. Bhattacharyya, Argonne National Laboratory, 9700 S. Cass Avenue, Argonne, IL 60439
51. B. W. Colston, MS F671, Los Alamos National Laboratory, P.O. Box 1663, Los Alamos, NM 87545
52. C. M. Cox, Hanford Engineering Development Laboratory, P.O. Box 1970, Richland, WA 99352
53. L. Cropp, Sandia National Laboratories, P.O. Box 5800, Albuquerque, NM 87185
54. P. Dirkmaat, DOE-ID, 550 Second Street, Idaho Falls, ID 83274
55. R. E. English, NASA Lewis Research Center, MS 501-15, 21000 Brookpark Road, Cleveland, OH 44135
56. E. U. Khan, U.S. Dept. of Energy, NE-54, Germantown, Washington, D.C. 20545
57. E. T. Mahefkey, Jr., Aeropropulsion Laboratory (POOC-5), U.S. Air Force Wright Aeronautical Laboratories, Wright-Patterson Air Force Base, OH 45433
58. J. R. Powell, Brookhaven National Laboratory, Associated Universities, Inc., Upton, NY 11973
59. J. M. Smith, NASA Lewis Research Center, MS 500-202, Building 4013, 21000 Brookpark Road, Cleveland, OH 44135
60. R. J. Sovie, NASA Lewis Research Center, MS 500-202, Building 4013, 21000 Brookpark Road, Cleveland, OH 44135
61. R. Verga, Strategic Defense Initiative/Director of Energy, The Pentagon, Washington, D.C. 20301-7100
62. E. J. Wahlquist, U.S. Dept. of Energy, NE-54, Germantown, Washington, D.C. 20545
63. C. E. Walter, Lawrence Livermore National Laboratory, University of California, P.O. Box 808, Livermore, CA 94550
64. R. D. Widrig, Pacific Northwest Laboratory, Battelle Boulevard, Richland, WA 99532

65. R. Wylie, Strategic Defense Initiative/Director of Energy, The Pentagon, Washington, D.C. 20301-7100
66. H. R. Zweig, Energy Technology Engineering Center, Rocketdyne Division, Rockwell International Corp., P.O. Box 1449, Canoga Park, CA 91304
67. Office of Assistant Manager for Energy, Research and Development, DOE-Oak Ridge Operations, Oak Ridge, TN 37831

68-94. Office of Scientific and Technical Information, P.O. Box 62, Oak Ridge, TN 37831

☆U.S. GOVERNMENT PRINTING OFFICE: 1986-631-056/20256