MARTIN MARIETTA ENERGY SYSTEMS LIBRARIES

3 4456 0146821 4

ORNL/TM-10281

ornl

OAK RIDGE NATIONAL LABORATORY

MARTIN MARIETTA

# Design of a Pulsed-Mode Fluidic Pump Using a Venturi-Like Reverse Flow Diverter

G. V. Smith
B. E. Lewis

OAK RIDGE NATIONAL LABORATORY
CENTRAL RESEARCH LIBRARY
CIRCULATION SECTION
4500N ROOM 175
LIBRARY LOAN COPY
DO NOT TRANSFER TO ANOTHER PERSON
If you wish someone else to see this report, send in name with report and the library will arrange a loan.
UCN-7969 (3 9-77)

CONSOLIDATED FUEL REPROCESSING PROGRAM

OPERATED BY
MARTIN MARIETTA ENERGY SYSTEMS, INC.
FOR THE UNITED STATES
DEPARTMENT OF ENERGY

Printed in the United States of America. Available from
National Technical Information Service
U.S. Department of Commerce
5285 Port Royal Road, Springfield, Virginia 22161
NTIS price codes—Printed Copy: A04; Microfiche A01

This report was prepared as an account of work sponsored by an agency of the United States Government. Neither the United States Government nor any agency thereof, nor any of their employees, makes any warranty, express or implied, or assumes any legal liability or responsibility for the accuracy, completeness, or usefulness of any information, apparatus, product, or process disclosed, or represents that its use would not infringe privately owned rights. Reference herein to any specific commercial product, process, or service by trade name, trademark, manufacturer, or otherwise, does not necessarily constitute or imply its endorsement, recommendation, or favoring by the United States Government or any agency thereof. The views and opinions of authors expressed herein do not necessarily state or reflect those of the United States Government or any agency thereof.

ORNL/TM-10281
Dist. Category UC-86

Consolidated Fuel Reprocessing Program

# DESIGN OF A PULSED-MODE FLUIDIC PUMP USING A VENTURI-LIKE REVERSE FLOW DIVERTER

G. V. Smith
Mechanical and Aerospace Engineering Department
The University of Tennessee
Knoxville, Tennessee

B. E. Lewis
Fuel Recycle Division

Date Published: February 1987

Prepared for the
Office of Facilities, Fuel Cycle,
and Test Programs

Prepared by the
OAK RIDGE NATIONAL LABORATORY
Oak Ridge, Tennessee 37831
operated by
MARTIN MARIETTA ENERGY SYSTEMS, INC.
for the
U.S. DEPARTMENT OF ENERGY
under Contract No. DE-AC05-84OR21400

MARTIN MARIETTA ENERGY SYSTEMS LIBRARIES
3 4456 0146821 4

## CONTENTS

ABSTRACT ..... v

1. INTRODUCTION ..... 1

2. DESIGN EQUATION ..... 5
   - 2.1 Pump Time ..... 6
   - 2.2 Refill Time ..... 8
   - 2.3 Average Receiver Flow ..... 11
   - 2.4 Alternate Design Procedure ..... 18

3. CONCLUSIONS ..... 21

REFERENCES ..... 23

NOMENCLATURE ..... 25

Appendix A. EXAMPLE DESIGN TECHNIQUE WITH VARIABLE OUTPUT LINE DIAMETER ..... 27

Appendix B. EXAMPLE DESIGN TECHNIQUE WITH FIXED OUTPUT LINE DIAMETER ..... 37

## ABSTRACT

This report presents a design procedure for pulsed-mode, venturi-like reverse flow diverter (RFD) pumping systems. Design techniques are presented for systems in which the output line area is allowed to vary proportionally with the throat area of the RFD as well as situations in which the output line area is held constant.

The results show that for cases in which the output line area is allowed to vary, an optimum RFD throat area exists for a given input pressure. For situations in which the output line area is held constant, the average output flow decreases in almost a linear fashion with increasing RFD throat area.

# 1. INTRODUCTION

The advantages of a pumping system with no packing glands, mechanical seals, or moving parts are obvious in the transport of hazardous fluids. These characteristics are inherent in fluidic pumping systems using a reverse flow diverter (RFD). The RFD shown schematically in Fig. 1 has therefore been studied both analytically and experimentally.[1–3]

The operational concept of a pumping system using an RFD, such as the one shown in Fig. 2, is that when the pumping chamber is vented, fluid flows from the feed tank to the pumping chamber via a hydrostatic head existing between them. When filled, the pumping chamber is pressurized; this forces the fluid through the output line to the receiver tank until the pumping chamber is empty. The pumping chamber is then vented, and the cycle is repeated. The pumping system thus operates in a pulsed mode. If transient effects are neglected, the volumetric flow rates associated with the pumping cycle are square waves, as shown in Fig. 3. Mathematical models have been developed[1–3] that allow the input flow rate, the output flow rate, and the refill flow rate to be approximated in terms of the geometric and operating parameters of the system.

The purpose of this report is to present a rational design methodology to determine the geometric and operational parameters of a fluidic pumping system. It is important to note that essentially all attention in previous work[1–3] has been focused on the RFD alone. In designing a complete system, the design engineer must first determine how the rest of the system interacts with the RFD because the characteristics of the RFD alone are not sufficient to design a fluidic pumping system.

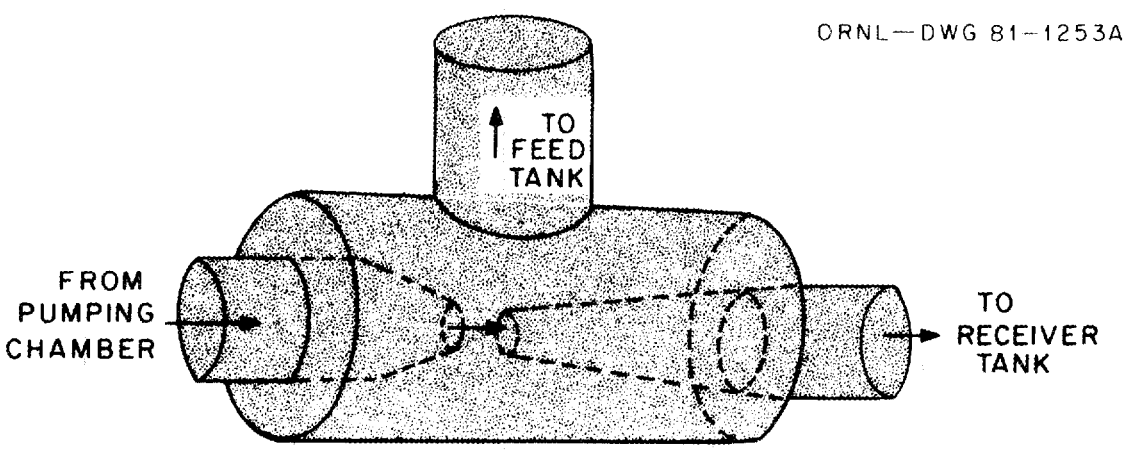


**Fig. 1. Schematic of an RFD.**

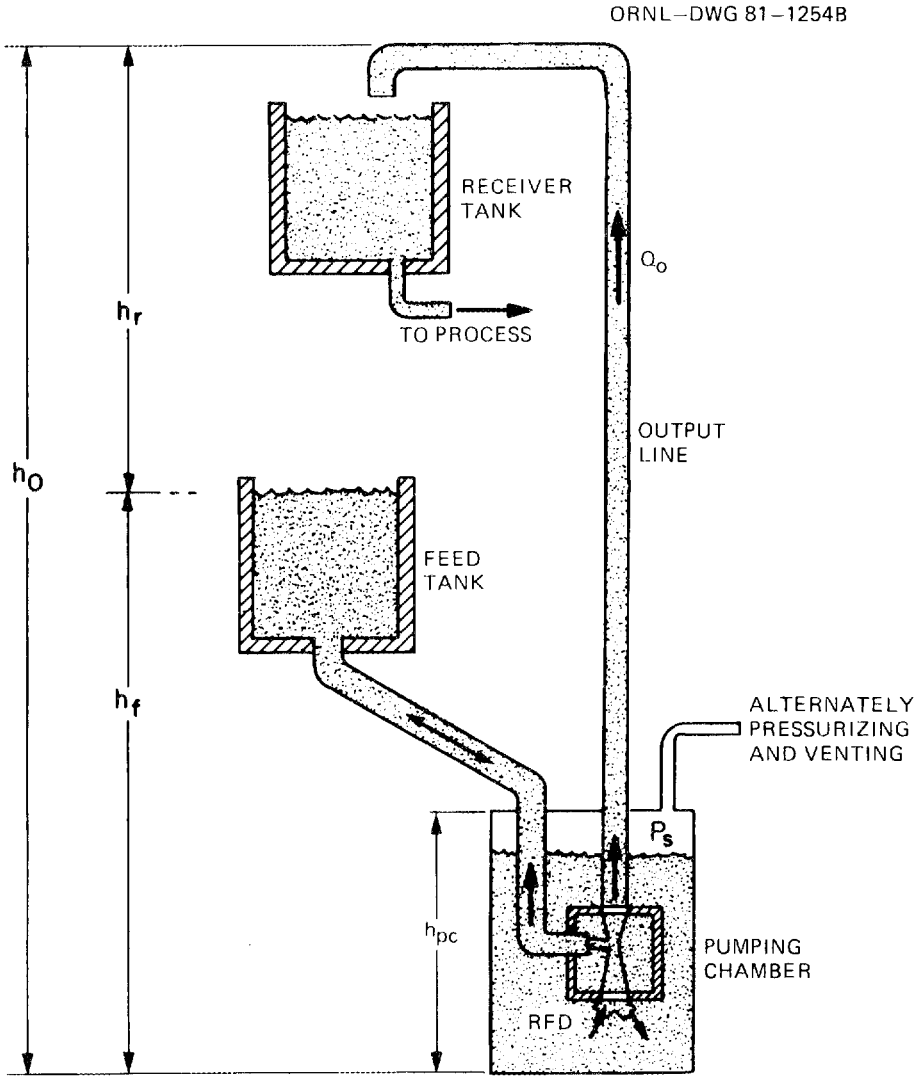


**Fig. 2. Schematic of a fluidic pump application.**

ORNL-DWG 82-17011

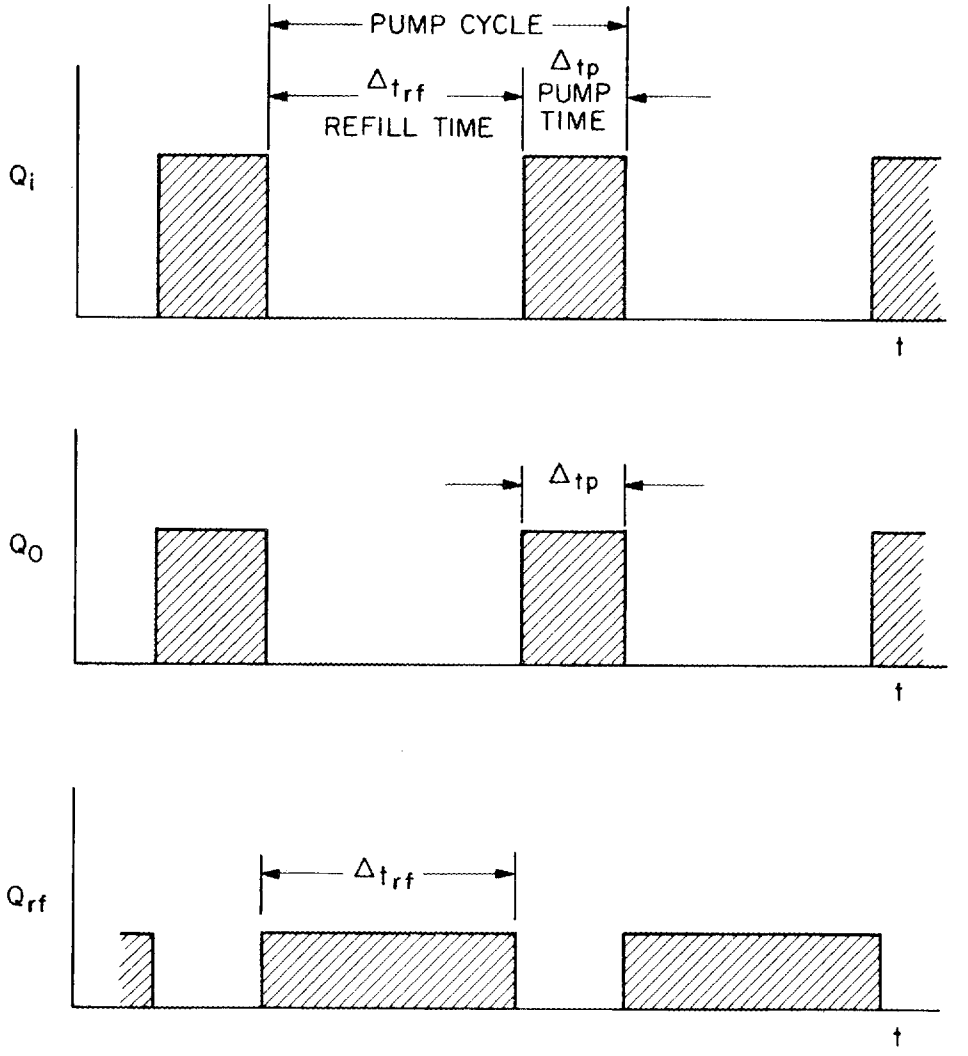


**Fig. 3. Flow rate vs time for a typical pumping cycle.**

## 2. DESIGN EQUATIONS

It is assumed that the purpose of the pumping system is to transport fluid to a receiver tank, which in turn provides a continuous fluid flow to a process. The receiver tank is, therefore, essentially a large-capacity reservoir that smooths the output flow from the pulsed-mode pumping system. Obviously, the volume of fluid delivered to the receiver tank during the pumping portion of the system's cycle must equal the volume of fluid transported to the process during the entire pumping cycle (i.e., the pump time and the refill time). Thus, it is reasonable to assume that typical design information is for the pumping system to deliver some average flow rate through some vertical distance. The term "average" is used in this report to indicate the average over a pumping cycle and will be indicated by the subscript a.

The output volume of fluid leaving the diffuser of the RFD during the pumping portion of the cycle is

$$V_o = \int_t^{t + \Delta t_p} Q_o dt \quad , \tag{1}$$

or assuming steady flow

$$V_o = Q_o \Delta t_p \quad . \tag{2}$$

It is important to note that the output volume of fluid leaving the RFD is not equal to the volume of fluid delivered to the receiver tank during a pumping cycle. The difference is the volume of the output line above the feed tank, which must be filled before fluid begins to flow into the receiver tank. While the pumping chamber is vented, the fluid in the output line above the feed tank drains back into the pumping chamber and must be refilled during each pumping portion of the cycle. Thus, the volume of fluid delivered to the receiver tank, $V_{rec}$, is given by:

$$V_{rec} = V_o - V_r \quad , \tag{3}$$

where $V_r$ is the volume of both vertical and horizontal components of the output line above the feed tank.

The average flow rate to the receiver tank, $Q_{ra}$, over a pumping cycle is therefore given by:

$$Q_{ra} = \frac{V_o - V_r}{\Delta t_p + \Delta t_{rf}} \quad . \tag{4}$$

As previously stated, it is assumed that the average flow to the receiver tank is one of the stated performance requirements of the pumping system; the other requirement is the vertical distance through which the fluid must be pumped, $h_r$. The next step in this analysis is to evaluate the terms on the right-hand side of Eq. (4) as a function of the geometric and operating parameters of the pumping system.

## 2.1 PUMP TIME

The time required to pump the fluid from the pumping chamber through the nozzle of the RFD is obtained from Bernoulli's equation for steady, inviscid, and incompressible flow between the region immediately outside the nozzle inlet, where the velocity is very small, and the nozzle throat as:

$$P_i + \rho g h = P_t + 1/2 \rho v_t^2 \quad . \tag{5}$$

The two terms on the left-hand side of Eq. (5) represent the static air pressure applied at the top of the pumping chamber and the hydrostatic head of the fluid inside the pumping chamber respectively. The two terms on the right-hand side of Eq. (5) represent the static pressure at the exit of the nozzle and the dynamic pressure of the fluid emanating from the nozzle, respectively. The static pressure at the throat of the nozzle is assumed to be equal to the impressed hydrostatic pressure of the feed tank,

$$P_t = \rho g h_f \quad . \tag{6}$$

Solving for the velocity in Eq. (5) and multiplying by the cross-sectional area of the throat to obtain the volumetric flow rate through the nozzle yields:

$$Q_i = C_d A_t \sqrt{2 (P_i + \rho g h - P_t)/\rho} \quad , \tag{7}$$

where a discharge coefficient has been introduced to account for irreversibilities in the flow due to frictional losses.

The continuity equation applied to the control volume consisting of the pumping chamber and the nozzle of the RFD yields:

$$Q_i = -\frac{dV_{pc}}{dt} = -A_{pc}\frac{dh}{dt} \quad , \tag{8}$$

where it is assumed that the pumping chamber is of constant cross sectional area, $A_{pc}$.

Substitutions of Eq. (7) into Eq. (8) yields a first-order nonlinear differential equation in which the variables may be separated to yield:

$$\frac{C_d A_t}{A_{pc}} \int_o^{\Delta t_p} dt = -\int_{h_{pc}}^{o} \frac{dh}{\sqrt{2\,(P_i + \rho g h - P_t)/\rho}} \quad . \tag{9}$$

Integration of Eq. (9) between the stated limits yields:

$$\Delta t_p = \sqrt{2/g}\,\frac{A_{pc}}{C_d A_t}\left( \sqrt{\frac{P_i - P_t}{\rho g} + h_{pc}} - \sqrt{\frac{P_i - P_t}{\rho g}} \right) \quad . \tag{10}$$

It was necessary to integrate Eq. (9) because as fluid exits the pumping chamber, the hydrostatic head from the fluid inside the pumping chamber decreases, thus yielding a varying pressure at the inlet to the nozzle of the RFD.

Because, in general, the static air pressure applied to the pumping chamber is considerably larger than the varying hydrostatic pressure of the fluid, it is reasonable to treat the hydrostatic pressure of the fluid within the pumping chamber as a constant value equal to its mean value, $h_{pc}/2$. Thus, Eq. (7) becomes:

$$Q_i = C_d A_t \sqrt{2\,[P_i + (\rho g h_{pc}/2) - P_t]/\rho} \quad , \tag{11}$$

and is time invariant. With this constant value of $Q_i$, continuity becomes:

$$Q_i = -\frac{dV_{pc}}{dt} = \frac{V_{pc}}{\Delta t_p} = \frac{A_{pc} h_{pc}}{\Delta t_p} \quad . \tag{12}$$

Substituting Eq. (11) into Eq. (12) and rearranging yield:

$$\Delta t_p = \sqrt{2/g}\ \frac{A_{pc}}{C_d A_t} \left( \frac{h_{pc}}{2\sqrt{\frac{P_i - P_t}{\rho g} + \frac{h_{pc}}{2}}} \right) \quad . \tag{13}$$

In fact, because $P_i$ is generally much greater than the maximum pumping chamber's hydrostatic pressure, $\rho g h_{pc}$, it is felt that the hydrostatic head term could be completely neglected in Eq. (13) without a significant loss of accuracy. Equation (10) may be considered an exact solution, while Eq. (13) is an approximate solution.

## 2.2 REFILL TIME

The time required to refill the pumping chamber may be obtained from an analysis beginning with Bernoulli's equation written between the throat of the nozzle and the area immediately outside the nozzle as:

$$\rho g h_f = \rho g h + 1/2 \rho v_t^2 \quad . \tag{14}$$

In this analysis, it is assumed that the only resistance to fluid flowing from the feed tank to the pumping chamber is the constriction caused by the nozzle throat of the RFD.

Solving Eq. (14) for the velocity and multiplying by the throat area to give the volumetric flow rate yields:

$$Q_{rf} = A_t v_t = C_{drf} A_t \sqrt{2g(h_f - h)} \quad , \tag{15}$$

where $h$ is the height or level of fluid inside the pumping chamber and $C_{drf}$ is a refill discharge coefficient to account for irreversibilities in the flow.

Applying continuity to the pumping chamber yields:

$$Q_{rf} = \frac{dV_{pc}}{dt} = A_{pc} \frac{dh}{dt} \quad , \tag{16}$$

where, as before, the pumping chamber is assumed to be of uniform cross-sectional area.

Substituting Eq. (15) into Eq. (16) and separating the variables yields:

$$C_{drf} \frac{A_t}{A_{pc}} \int_0^{\Delta t_{rf}} dt = \int_0^{h_{pc}} \frac{dh}{\sqrt{2g(h_f - h)}} \quad . \tag{17}$$

Integrating Eq. (17) between the given limits yields for the refill time:

$$\Delta t_{rf} = \sqrt{2/g}\,\frac{A_{pc}}{C_{drf}A_t}\left(\sqrt{h_f} - \sqrt{h_f - h_{pc}}\right) \quad . \tag{18}$$

If Eq. (18) is considered exact, an approximate solution can be obtained by considering the hydrostatic pressure of the fluid within the pumping chamber to be constant at its mean value of $\rho g h_{pc}/2$. Thus, Eq. (15) becomes:

$$Q_{rf} = C_{drf}A_t\sqrt{2\,g(h_f - h_{pc}/2)} \quad , \tag{19}$$

while Eq. (16) becomes:

$$Q_{rf} = \frac{V_{pc}}{\Delta t_{rf}} = \frac{A_{pc}h_{pc}}{\Delta t_{rf}} \quad . \tag{20}$$

Substituting Eq. (19) into Eq. (20) and rearranging yields an approximate solution for the refill time as:

$$\Delta t_{rf} = \sqrt{2/g}\,\frac{A_{pc}}{C_{drf}A_t}\left[\frac{h_{pc}}{2\sqrt{h_f - h_{pc}/2}}\right] \quad . \tag{21}$$

The approximate solution yields very accurate results when $h_f$ is considerably greater than $h_{pc}$. As $h_{pc}$ approaches $h_f$, as would be the case when the feed tank is emptied, the approximate solution breaks down and gives erroneous results.

In order to compare the exact and approximate solutions for the pump and refill times, Figs. 4 and 5 are presented. Figure 4 presents the ratio of approximate and exact pump times plotted vs the normalized input pressure with the normalized height of the pumping chamber as a parameter. This figure indicates the excellent agreement between the two pump times for pumping pressure only slightly greater than the hydrostatic pressure of the feed tank. Normally, the pumping pressure will be significantly greater than the feed tank hydrostatic pressure, thus ensuring consistently good accuracy for the approximate solution. The pumping chamber height should not, under normal circumstances, be expected to be greater than the feed tank height. If this condition is not valid, the pumping chamber will never completely fill. It should also be noted that essen-

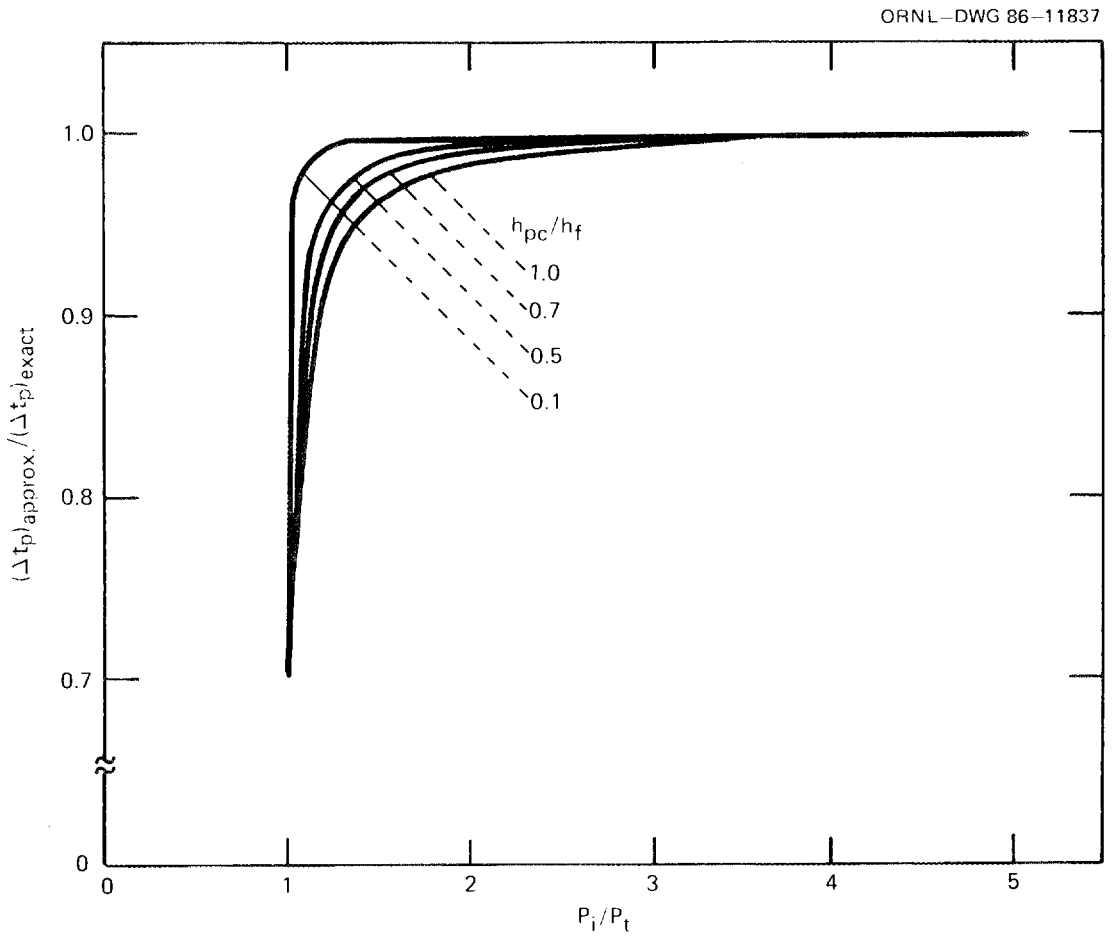


**Fig. 4. Comparison of approximate and exact pump time.**

tially equally good accuracy is obtained if the pumping chamber hydrostatic pressure is completely neglected because the change in motivation pressure resulting from the change in the hydrostatic head in the pumping chamber is insignificant. The normalized approximate solution for the pump time thus becomes:

$$\Delta t_p = \sqrt{\rho/2}\,\frac{A_{pc}}{C_d A_t}\left[\frac{h_{pc}}{\sqrt{P_i - P_t}}\right] \quad . \tag{22}$$

Figure 5 presents the ratio of the approximate-to-exact refill time plotted vs the normalized pumping chamber height. For pumping chamber heights less than 75% of the height of the feed tank, less than a 5% error is incurred by using the approximate solution, while for the case when the two tanks are the same height, an error of approximately 30% is encountered.

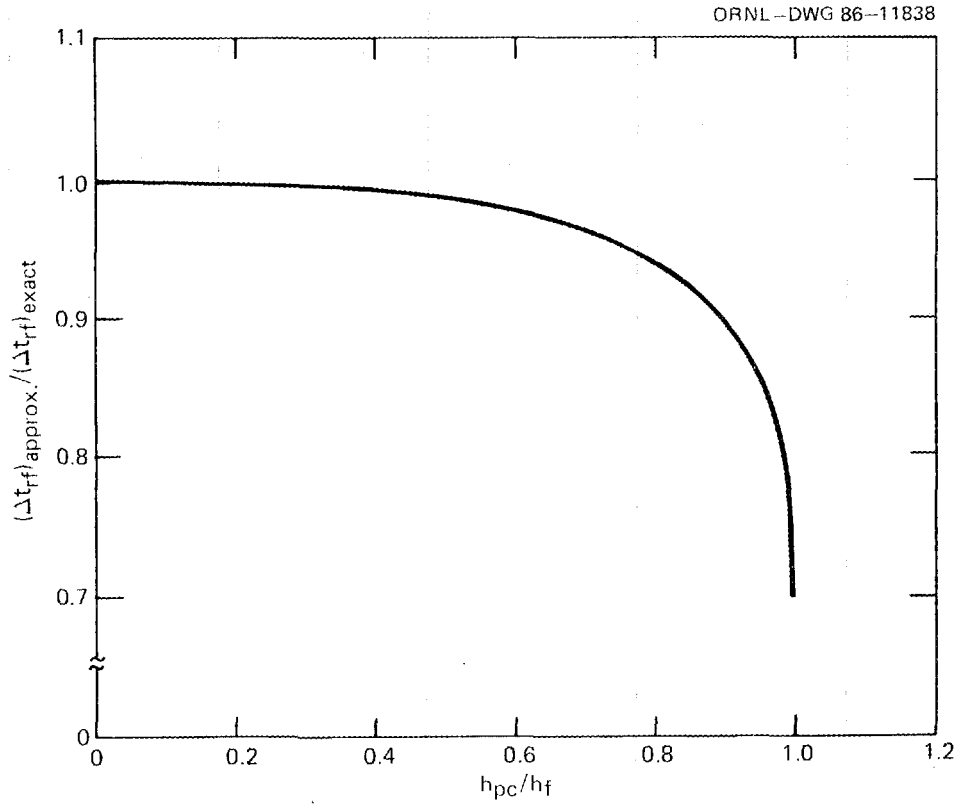


**Fig. 5. Comparison of approximate and exact refill time.**

## 2.3 AVERAGE RECEIVER FLOW

Either the exact or approximate solution to the pump and refill times can be inserted into Eq. (4) for the average flow rate to the receiver tank. It is appropriate now to determine the RFD output volume of fluid during a pumping cycle, $V_o$, and the volume of the line to the receiver, $V_r$, in terms of the system's operating and geometric parameters.

The volume of fluid forced through the diffuser of the RFD during the pumping portion of the system's cycle is equal to the integral of the volumetric flow rate through the diffuser during the pumping time of the cycle. If transient effects are neglected, this integral reduces to the product of the RFD output flow rate and the pump time or:

$$V_o = Q_o \Delta t_p \quad . \tag{23}$$

A mathematical model of the output flow rate of the RFD has been presented in previous papers [2–3] and may be stated as:

$$Q_o = \frac{A_t}{\sqrt{1 - C_p}} \sqrt{2(P_i - P_o)/\rho} \quad , \tag{24}$$

where $C_p$ is the pressure recovery coefficient of the diffuser. This equation neglects the slight effect of hydrostatic head variation within the pumping chamber. It also neglects any losses within the nozzle of the RFD (i.e., it assumes a discharge coefficient of unity), which has been shown to be a good approximation of the flow through the nozzle.

Substituting Eqs. (24) and (22) into Eq. (23) yields, after algebraic manipulation:

$$V_o = \frac{A_{pc} h_{pc}}{\sqrt{1 - C_p}} \sqrt{\frac{P_i - P_o}{P_i - P_t}} \quad , \tag{25}$$

or

$$V_o = A_{pc} h_{pc} \sqrt{\frac{1 - PDR}{1 - C_p}} \quad , \tag{26}$$

where $PDR$ is the pressure difference ratio and is defined as:

$$PDR = \frac{P_o - P_t}{P_i - P_t} \quad . \tag{27}$$

Theory and data previously reported [2–3] for the RFD have been presented as a function of the pressure difference ratio.

The volume of the output line above the feed tank is simply its cross-sectional area, $A_r$, times its length. Its length is the sum of both horizontal length components, $L_r$, and vertical components, $h_r$. Thus,

$$V_r = A_r(h_r + L_r) \quad . \tag{28}$$

The important point here is the fact that the cross-sectional area of the line to the receiver tank is not an independent variable but is dependent on the inlet area of the diffuser. To illustrate this point, a schematic of the diffuser of the RFD and output line is presented in Fig. 6. It should first be noted that the relationship between the diffuser inlet and exit area (i.e., $A_t$ and $A_o$, respectively) is determined by "good" diffuser design. Typical references[4–6] on plane-walled and axisymmetric diffusers give maps of the relationships between diffuser geometric parameters (i.e., diffuser design) and stability regimes as well as performance characteristics (i.e., pressure recovery coefficients). The three most important geometric parameters of a diffuser are the area ratio, $A_o/A_t$, divergence angle, $2\theta$, and

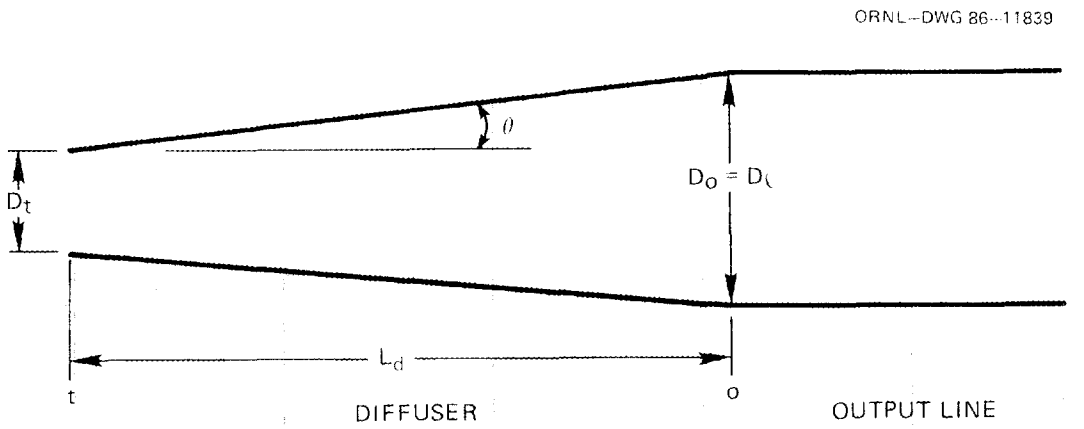


**Fig. 6. Schematic of an RFD diffuser.**

the slenderness $L_d/D_t$. Only two of these are independent. Good diffuser performance and design are limited between high viscous losses (i.e., small area ratio and small divergence angle) and flow separation (i.e., large area ratio and large divergence angle).

Assuming that the output area of the diffuser is equal to the line area, the output line cross-sectional area is known in terms of the receiver/diffuser inlet area, $A_t$, and the area ratio of the diffuser, $AR$. Thus,

$$A_r = (AR)A_t \quad . \tag{29}$$

The volume of the output line above the feed tank is therefore:

$$V_r = (AR)A_t(h_r + L_r) \quad . \tag{30}$$

Substitution of Eqs, (13), (18), (26), and (30) into Eq. (4) yields:

$$Q_{ra} = \frac{A_t A_{pc} \bar{h}_{pc} \sqrt{\dfrac{1 - PDR}{1 - C_p}} - (AR)(h_r + L_r)A_t^2}{\sqrt{2h_f/g}\; A_{pc} \left( \dfrac{\bar{h}_{pc}}{2C_d \sqrt{\bar{P}_i - 1 + \bar{h}_{pc}/2}} + \dfrac{1 - \sqrt{1 - \bar{h}_{pc}}}{C_{drf}} \right)} \quad , \tag{31}$$

where

$$\bar{h}_{pc} = \frac{h_{pc}}{h_f} \quad , \tag{32}$$

and

$$\overline{P}_i = \frac{P_i}{P_t} \quad . \tag{33}$$

From Eq. (31) it is evident that if all other parameters are held constant, the average volumetric flow delivered to the receiver tank varies in a quadratic manner with the throat area of the RFD as depicted in Fig. 7. The value of $A_t$ that yields the maximum average flow delivered to the receiver tank (i.e., the "optimum" $A_t$) may be obtained by taking the partial derivative of Eq. (31) with respect to $A_t$. Equating this derivative to zero and solving the resulting equation for $A_t$ to yield the optimum throat area, $(A_t)_{opt}$:

$$(A_t)_{opt} = \frac{A_{pc}h_{pc}}{2(AR)(h_r + L_r)}\sqrt{\frac{1 - PDR}{1 - C_p}} \quad . \tag{34}$$

In typical design situations, all the parameters on the right-hand side of Eq. (34) are known with the exception of the pressure difference ratio [Eq. (27)], which contains both the pressure applied to the pumping chamber as well as the output pressure of the diffuser of the RFD. Thus, Eq. (34) is a single equation in three unknowns, indicating the necessity of obtaining additional equations in order to solve for the optimum RFD throat area.

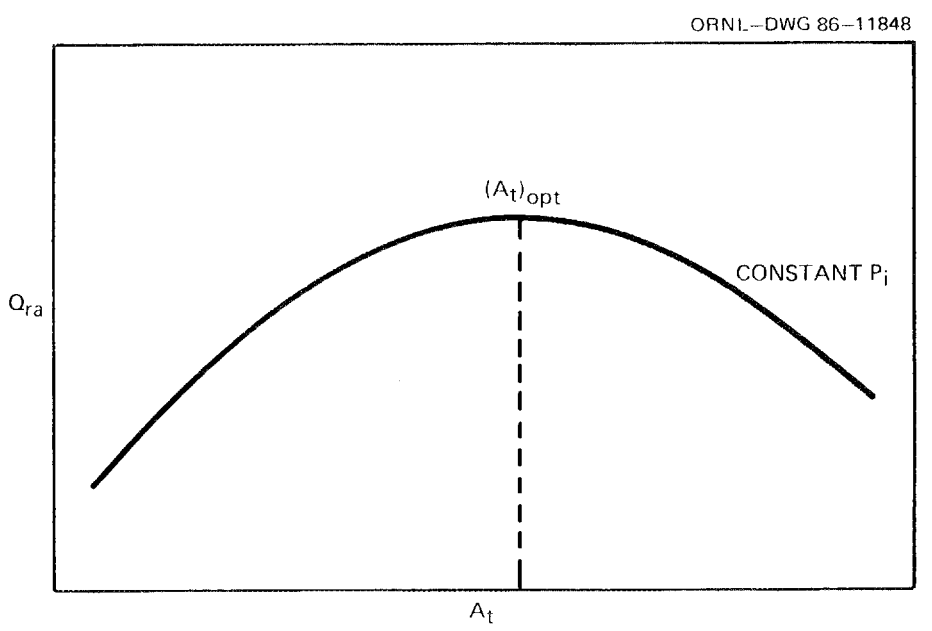


**Fig. 7. Variation of average flow to receiver as a function of RFD minimum area.**

In addition to equations already developed, an additional equation may be determined by analyzing the pressure/flow relationship for the line from the RFD output to the receiver tank. Applying the energy equation to this output line yields:

$$P_o = \rho g h_o + \left[ f \left( \frac{h_o + L_o}{D_o} \right) + K \right] \frac{Q_o^2 \rho}{2A_t^2 (AR)^2} \quad . \tag{35}$$

This equation assumes a uniform diameter line of vertical elevation between inlet and exit of $h_o$; horizontal length of $L_o$ including horizontal runs above and below the feed tank; and total minor loss coefficients (elbows, values, etc.), $K$. The friction factor, $f$, is dependent on the Reynolds number as well as the relative roughness of the inside surface of the conduit.

At this point, it should be noted that sufficient equations have been developed to determine the optimum RFD throat area given by Eq. (22). The equations, in dimensional form, necessary to determine this area are Eqs. (2), (4), (10) or (13), (18), (24), (27), (28), (29), (34), and (35). Thus, 10 equations are available to determine the 11 unknowns; $A_t$, $A_r$, $P_i$, $P_o$, $PDR$, $Q_o$, $Q_{ra}$, $V_o$, $V_r$, $\Delta t_p$, and $\Delta t_{rf}$. If one of these parameters is fixed, then the optimum value of $A_t$ can be determined. For example, if $P_i$ is chosen, then the optimum value of $A_t$ may be solved for.

Normalizing time with respect to $\sqrt{2h_f/g}$ ; the flow rate with respect to $A_{pc}\sqrt{gh_f/2}$; length, area, and volume with respect to $h_f$, $A_{pc}$, and $h_f A_{pc}$, respectively; as well as including those normalization quantities previously mentioned, enables these equations to be written, after substituting Eq. (2) into Eq. (4) and Eq. (27) into Eq. (34), as:

$$(\bar{A}_t)_{opt} = \frac{\bar{h}_{pc}}{2(AR)(\bar{h}_r + \bar{L}_r)\sqrt{1 - C_p}} \sqrt{\frac{\bar{P}_i - \bar{P}_o}{\bar{P}_i - 1}} \quad , \tag{36}$$

$$\bar{Q}_{ra} = \frac{\bar{Q}_o \Delta\bar{t}_p - \bar{A}_t (AR)(\bar{L}_o + \bar{h}_o)/2}{\Delta\bar{t}_p + \Delta\bar{t}_{rf}} \quad , \tag{37}$$

$$\bar{Q}_o = \bar{A}_t \sqrt{\frac{\bar{P}_i - \bar{P}_o}{1 - C_p}} \quad , \tag{38}$$

$$\bar{P}_o = \bar{h}_o + \left[ f \left( \frac{\bar{h}_o + \bar{L}_o}{\bar{D}_o} \right) + K \right] \frac{\bar{Q}_o^2}{\bar{A}_t^2 (AR)^2} \quad , \tag{39}$$

$$\bar{\Delta} t_p = \frac{\bar{h}_{pc}}{2C_d \bar{A}_t \sqrt{\bar{P}_i - 1 + \bar{h}_{pc}/2}} \quad , \tag{40}$$

and

$$\overline{\Delta t}_{rf} = \frac{1 - \sqrt{1 - \overline{h}_{pc}}}{C_{drf} A_t} \quad . \tag{41}$$

Although these equations are sufficient to determine the optimum throat area of the RFD, for a given input pressure, the nonlinear system of equations is unwieldly and difficult to solve in practice. For this reason, and others to be discussed later, an alternate design approach for the pumping system is presented.

In this approach, the equation for the optimum throat area [Eq. (36)] is not utilized, and the average flow delivered to the receiver tank, $Q_{ra}$, is treated as an unknown instead of a known or design parameter. The system of equations describing the operation of the pumping system is solved for a given RFD throat area as well as pumping pressure, and the average flow rate to the receiver tank is calculated. A parametric study of various RFD throat areas and pumping pressures enables the design engineer to select an appropriate combination of these two parameters that will result in a pump design satisfying design requirements. This technique, while not directly yielding an optimum design, does have the advantage of allowing a study of a map of the predicted performance of the pumping system as a function of these parameters. Thus, the designer can easily determine the gradient of the system's performance characteristics with these design parameters and is in a position to make a design decision that may include some design considerations of perhaps secondary importance. In essence, this technique enables the design engineer to select a system from a range of perhaps equally suitable designs. The use of a microcomputer permits the designer to easily map the system's performance as a function of the two variables, $A_t$ and $P_i$. Any parameters of interest may be used to map the system's performance, although $A_t$ and $P_i$ seem to be the most logical choices. Although the equations for this analysis have already been presented, they are repeated here for convenience after some modification.

The instantaneous output characteristics of the RFD during the pumping portion of the cycle may be determined from Eqs. (24) and (35). Combining these two equations for the purpose of eliminating $P_o$ yields the instantaneous output flow as a function of the pumping pressure and throat area as:

$$Q_o = A_t \sqrt{\frac{2(P_i - \rho g h_o)/\rho}{1 - C_p + \dfrac{f(h_o + L_o)}{(AR)^2 D_o} + \dfrac{K}{(AR)^2}}} \quad . \tag{42}$$

Use of Eqs. (2), (13), and (18) enable Eq. (4) to be expressed as:

$$Q_{ra} = \frac{\left(\dfrac{Q_o}{Q_i}\right) V_{pc} - V_r}{\dfrac{V_{pc}}{Q_i} + \left(\dfrac{A_{pc}}{A_t C_{drf}}\right)\left[\sqrt{\dfrac{2h_f}{g}} - \sqrt{\dfrac{2(h_f - h_{pc})}{g}}\right]} \quad . \tag{43}$$

where $Q_i$ is given by Eq. (11).

The solution procedure appears to be simply to pick a throat area and diffuser area ratio, use Eq. (42) to determine the instantaneous output flow, and then use Eq. (43) to determine the average flow delivered to the receiver tank over a pumping cycle. Unfortunately, the procedure is not quite this simple because the friction factor, $f$, in the denominator of the radical of Eq. (42) is a function of the output line Reynolds number as well as the line relative roughness if the flow is turbulent (as perhaps normally expected). The Reynolds number, being a function of the flow velocity, is therefore an unknown, indicating insufficient information to determine the friction factor.

Perhaps the simplest technique to overcome this difficulty is to place Eq. (42) in a loop on the microcomputer. The first time through the loop, the friction factor is assumed to be zero, and the corresponding flow is determined. Using this flow rate, the Reynolds number of the output line is calculated, and a friction factor is determined. A new or an updated output flow is then determined using the friction factor evaluated. The new flow rate is then used to determine an updated Reynolds number, and the same procedure is continued until the calculated flow rate ceases to change.

The relationships among the friction factor, Reynolds number, and relative roughness are normally determined from the Moody chart. For computer purposes, it is more convenient to use the interpolation formula by C. F. Colebrook,[6]

$$\frac{1}{\sqrt{f}} = -2.0 \log \left[ \frac{\epsilon/d}{3.7} + \frac{2.51}{(Re)\sqrt{f}} \right] , \tag{44}$$

if the flow is turbulent (i.e., $Re > 4{,}000$).

For the turbulent flow regime, a simpler equation may be used if the pipe is considered smooth. This equation is given as:

$$f = \frac{0.3164}{Re^{1/4}} , \tag{45}$$

although it becomes increasingly inaccurate as the Reynolds number increases above $10^5$.

If the flow is laminar (i.e., $Re < 2{,}000$), the friction factor is given by:

$$f = \frac{64}{Re} . \tag{46}$$

To illustrate the technique introduced in this section to design a pumping system, a sample design is presented in Appendix A.

## 2.4 ALTERNATE DESIGN PROCEDURE

The reason the previously discussed design technique had an optimum RFD throat area is that the output line diameter was determined by the RFD throat area and the RFD diffuser area ratio. An interesting alternative to this technique is to fix the output line diameter at a value less than the diffuser outlet diameter and use a gradual contraction (i.e., nozzle) to connect the output of the RFD diffuser to the output line. This is shown schematically in Fig. 8. In essence, this arrangement allows the diffuser of the RFD to convert a portion of the dynamic pressure of the fluid entering the receiver to static pressure in the plenum volume. This pressure is used to drive the fluid into the fixed diameter output line to the receiver tank.

Fixing the output line diameter has several interesting effects on the performance of the system. Perhaps the most significant effect is that the volume of the line is fixed, which means that in the numerator of Eq. (4), the volume of fluid leaving the RFD that never reaches the receiver tank is a constant instead of a variable as it is in the previous design technique. This means that for a given input pressure, an optimum throat area does not necessarily exit. By keeping the output line volume fixed, the design engineer has some control over the volume of fluid that the system may be unable to remove from the feed tank in situations where it is desirable to "pump" the system dry."

An obvious penalty that is paid by this technique is the fact that by keeping the line diameter "small," the pressure drop resulting from friction may increase significantly. It is noted that the pressure drop for a given flow rate in turbulent flow caused by viscous friction is inversely proportional to the line diameter to the fifth power. Thus, a reduction in the RFD output diameter of 1/2 (i.e., $D_\ell/D_o = 1/2$) will require 32 times the output pressure than would be required if no reduction occurred. This observation is of considerable importance in certain applications.

The energy equation for the pressure drop in the output line may be expressed as

$$P_o = \rho g h_o + \left[ f \left( \frac{h_o + L_o}{D_\ell} \right) + K \right] \frac{\rho Q_o^2}{2 A_r^2} \quad . \tag{47}$$

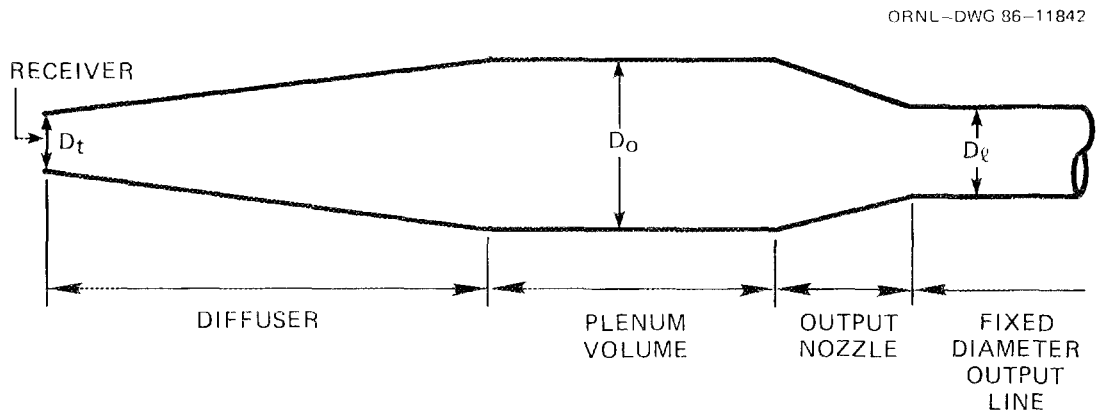


**Fig. 8. RFD diffuser with output nozzle.**

Combining Eq. (47) with Eq. (24) yields:

$$Q_o = \sqrt{\frac{2(P_i - \rho g h_o)/\rho}{\dfrac{1 - C_p}{A_t^2} + \dfrac{f(h_o + L_o)/D_\ell + K}{A_r^2}}} \quad . \tag{48}$$

For all parameters on the right-hand side of Eq. (48) constant except for the throat area, comparison of the output flow calculated from this equation with that calculated from Eq. (42) (for variable output line diameter) indicates that Eq. (42) always yields the greater flow for given $A_t$ during the pumping portion of the cycle. This does not indicate that the average output flow follows this same trend because as $A_t$ increases, the dead volume of the output line increases in the previous design technique but remains constant in this current analysis.

Several comments should be made at this time. The minor loss terms in Eqs. (47) and (48) should now include the additional loss associated with the gradual contraction. However, F.M. White[6] indicates that for gradual contractions, the loss is very small (e.g., $K$ = 0.04 for a contraction cone included angle of 45°). It is also noted that all of this analysis is predicated on the assumption that the output line area is less than the output diffuser area. If this is not true, then the output line area should equal the output diffuser area.

Appendix B presents an example of a design using this technique.

## 3. CONCLUSIONS

In this report two design procedures have been presented. The designer can use these procedures to specify a fluidic pumping system for either a new installation or an existing system. In the case of a new installation, an optimum pump design may be arrived at by varying the outlet line diameter in proportion with the RFD throat area. An optimum pump design does not necessarily exist for the case of an existing system with fixed-diameter outlet lines; however, a suitable pump design can be determined using these procedures.

## REFERENCES


1. Smith, G. V., and R. M. Counce, "Performance Characteristics of Axisymmetric Venturi-Like Reverse-Flow-Diverters," *J. Fluid Control Including Fluidics Quarterly* **16** (4).

2. Smith, G. V., and R. M. Counce, "Performance Characteristics of Plane-Wall Venturi-Like Reverse Flow Diverter," *Ind. Eng. Chem. Process Des. Dev.* **23,** 259–99.

3. Smith, G. V., and R. M. Counce, "Performance Characteristics of Axisymmetric Venturi-Like Reverse-Flow-Diverters," *J. Fluid Control Including Fluidics Quarterly* **16** (4).

4. Fox, R. W., and S. J. Kline, "Flow Regime Data and Design Methods for Curved Subsonic Diffusers," *J. Basic Eng.* **84**, 303–12.

5. Runstadler, Jr., P. W., F. X. Dolan, and R. C. Dean, Jr., *Diffuser Data Book*, TN-186, Creare Technical Information Service, Hanover, N.J., 1975.

6. White, F. M., *Fluid Mechanics*, 2d ed., McGraw-Hill, New York, 1986.

## NOMENCLATURE

| | |
|---|---|
| $A_o$ | maximum cross-sectional area of the diffuser |
| $A_{pc}$ | cross-sectional area of the pumping chamber during refill |
| $A_r$ | cross-sectional area of the output line from the RFD |
| $AR$ | area ratio for the diffuser, $A_o/A_t$ |
| $A_t$ | cross-sectional area of throat of the RFD |
| $(A_t)_{opt}$ | optimum throat area yielding the maximum average delivered flow to the receiver tank |
| $C_d$ | discharge coefficient to account for irreversibilities in the flow through the nozzle |
| $C_{drf}$ | discharge coefficient to account for irreversibilities in the flow during refill |
| $C_p$ | pressure recovery coefficient of the diffuser |
| $d$ | pipe diameter in friction factor equation |
| $D_\ell$ | output line diameter |
| $D_o$ | maximum diffuser diameter at the exit |
| $D_{pc}$ | diameter of pumping chamber |
| $D_t$ | minimum diameter of the diffuser at the throat |
| $f$ | friction factor |
| g | acceleration caused by gravity |
| $g_c$ | conversion factor for English units system $32.174 \frac{\text{ft}-\text{lb}_m}{\text{lb}_f-\text{s}}$ |
| $h$ | height of fluid inside pumping chamber |
| $h_f$ | height of fluid in the feed tank and the lines leading to the RFD |
| $h_o$ | vertical elevation between the inlet to the RFD and exit from the discharge line from the pumping chamber |
| $h_{pc}$ | height of the pumping chamber |

$h_r$ net vertical distance through which the fluid is pumped

$K$ total minor loss coefficients to account for elbows, valves, etc.

$L_d$ length of tappered portion of the diffuser

$L_r$ horizontal distance through which fluid is pumped, excluding those horizontal runs below the level in the feed tank

$L_o$ horizontal distance through which fluid is pumped, including the horizontal runs below the feed tank level

$PDR$ pressure difference ratio $\frac{P_o - P_t}{P_i - P_t}$

$P_i$ static air pressure applied at the top of the pumping chamber

$P_o$ pressure at the output of the RFD

$P_t$ static pressure in the throat of the RFD at the exit of the nozzle

$Q_i$ volumetric flow rate through the nozzle

$Q_o$ output volumetric flow of fluid leaving the diffuser during pumping

$Q_{ra}$ average flow rate to the receiver tank

$Q_{rt}$ volumetric flow rate to pumping chamber during refill

$Re$ Reynolds number

$t$ time

$V_o$ output volume of fluid leaving the diffuser during pumping

$V_{pc}$ volume of the pumping chamber

$V_r$ volume of the output line above the feed tank

$V_{rec}$ volume of fluid delivered to the receiver tank

$V_t$ fluid velocity in the throat of the RFD

$\bar{\ }$ bar over symbol indicates normalized quantities

$\epsilon$ roughness factor in friction factor equation

$\theta$ half the divergence angle of the diffuser

$\rho$ density

$\Delta t_p$ length of time for pumping cycle

$\Delta t_{rf}$ length of time for the pumping chamber to refill

$\mu$ viscosity

## Appendix A

## EXAMPLE OF DESIGN TECHNIQUE WITH VARIABLE OUTPUT LINE DIAMETER

In this appendix, an example of the design technique presented in Sects. 2.1, 2.2, and 2.3 is discussed. English units are used in the example and program.

### A.1 REQUIRED PERFORMANCE

The pump must be capable of delivering an average volumetric flow rate of 21 gal/h (0.35 gpm) through a vertical distance of 23 ft, from a tank with a nominal fluid level of 8 ft. The output line from the RFD has a horizontal run of 10 ft above the fluid level of the tank and no horizontal length below the fluid level in the tank. The output line will contain four standard 90° elbows. The fluid to be transported has the properties of water. A schematic of the system with associted dimensions is shown in Fig. A.1.

### A.2 DESIGN PROCEDURE

From an inspection of Eq. (43), it is evident that it is desirable to have the volume of the pumping chamber large compared to the volume of the output line above the feed tank. In initial design considerations, it is therefore usually desirable to ascribe as large a value as possible to the pumping chamber. In this example, it is assumed that the pumping chamber is limited to a diameter of 0.33 ft and a height of 1 ft. More will be presented later in this appendix on the effects of pumping chamber volume on the overall performance of the pumping system.

As previously discussed, the pressure recovery coefficient is dependent on two of the three diffuser parameters, area ratio, divergence angle, and slenderness. Maps of the pressure recovery coefficient may be found as functions of these parameters.[1–3] For this problem, an area ratio of 2.5 and slenderness of 11 are arbitrarily assumed, yielding a pressure recovery coefficient of 0.6.[2]

The refill discharge coefficient was determined to be about equal to 0.7 from experimental data. The reason this value is slightly higher than the normally used value of about 0.6 for an orifice is because of the smoothly diverging area in the nozzle during refill. This leads to smaller losses than those caused by the abrupt area change in an orifice.

The loss coefficient of a standard 90° elbow[4] is taken as 0.75 (yielding a total loss coefficient of 3 for 4 elbows), and the pipe is assumed to have a negligible roughness coefficient.

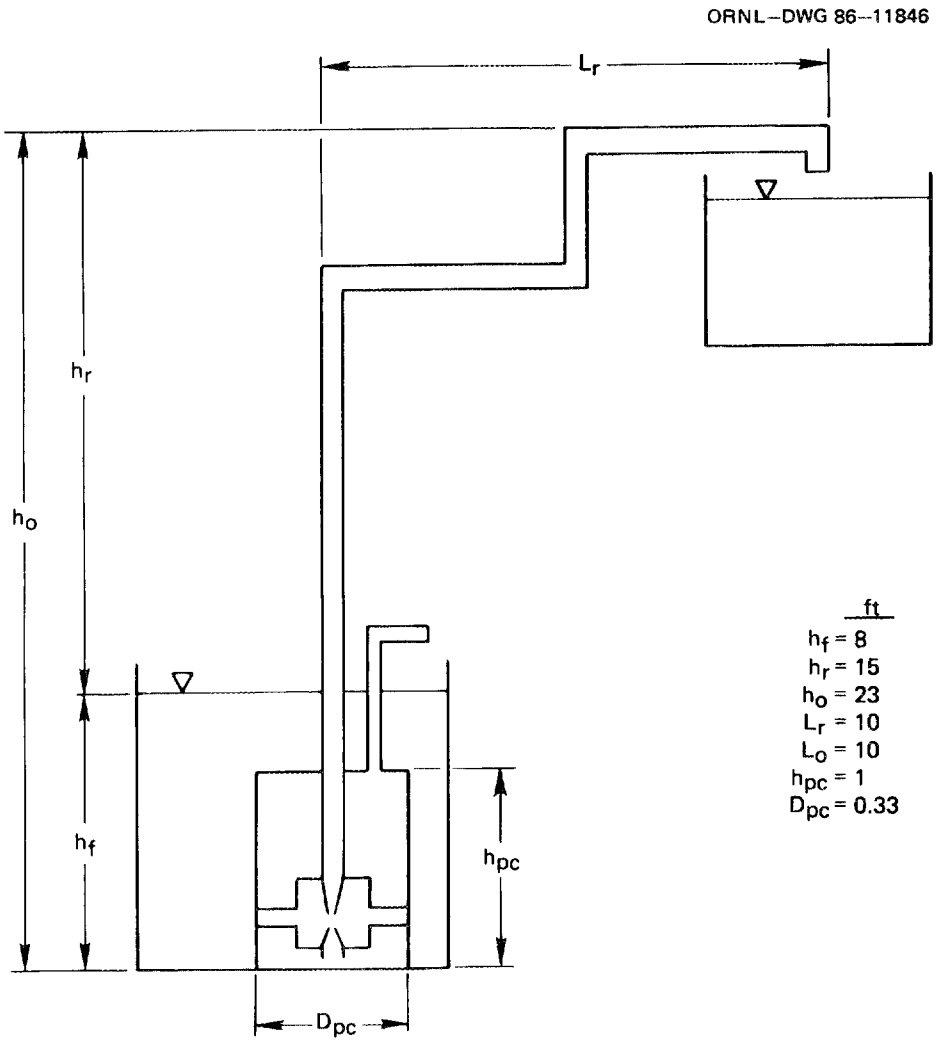


**Fig. A.1. Schematic of system's physical layout.**

The program used to calculate the average flow rate delivered to the receiver tank for a specific input pressure as a function of the throat area of the RFD, $A_t$, is listed in Exhibit A.1. Relating the variables and constants used in the program to those used in the text yields:

| | | |
|---|---|---|
| $AL = A_r$ | $DTP = \Delta T_p$ | $LR = L_r$ |
| $AO = A_o$ | $DTRF = \Delta T_{rf}$ | $NU = \mu$ |
| $APC = A_{pc}$ | $E = \epsilon$ | $PI = P_i$ |
| $AR = AR$ | $F = f$ | $QI = Q_i$ |
| $AT = A_t$ | $G = g$ | $QO = Q_o$ |
| $CD = C_d$ | $GC = g_c$ | $QRA = Q_{ra}$ |
| $CDRF = C_{drf}$ | $HF = h_f$ | $RE = Re$ |
| $CP = C_p$ | $HO = h_o$ | $ROE = \rho$ |
| $DO = D_o$ | $HPC = h_{pc}$ | $VL = V_r$ |
| $DL = D_\ell$ | $HR = h_r$ | $VPC = V_{pc}$ |
| $DPC = D_{pc}$ | $K = K$ | $VEL = V_o$ |
| $DT = D_t$ | $LO = L_o$ | |

```
10 REM PROGRAM NAME : VARIABLE
20 REM DATE : SEPTEMBER 11, 1986
30 REM VARIABLE OUTPUT LINE DIAMETER, G. V. SMITH, B. E. LEWIS
40 REM APPENDIX A
50 WIDTH "LPT1:",132:KEY OFF
60 LPRINT CHR$(27)+CHR$(15);CHR$(12);CHR$(27)+"N"+CHR$(2)
70 CLS:PRINT "Pulsatile fluidic pump design program : VARIABLE":PRINT "Variable
outlet line diameter":PRINT
80 PRINT "Do you wish to enter data from the keyboard or a data file (K or F)":I
NPUT ANSW$:IF ANSW$="F" OR ANSW$="f" THEN GOSUB 1120:GOTO 330
90 CLS:NU$="":ROE$="":PRINT "Enter fluid charateristics or press RETURN for defa
ult values:":INPUT "Viscosity, NU=0.00001 lb/ft-s  ==>",NU$:INPUT "Density, ROE=
62.4 lb/ft^3  ==>",ROE$
100 IF LEN(NU$)=0 THEN NU=.00001 ELSE NU=VAL(NU$)
110 IF LEN(ROE$)=0 THEN ROE=62.4 ELSE ROE$=VAL(ROE$)
120 PRINT :PRINT "Enter system characteristics or press RETURN for default value
s:"
130 HO$="":HF$="":HPC$="":INPUT "Vertical distance from RFD to receiver tank, HO
=23 ft  ==>",HO$:INPUT "Height of fluid in feed tank from RFD, HF=8 ft  ==>",HF$
:INPUT "Height of pumping chamber, HPC=1 ft  ==>",HPC$
140 HR$="":DPC$="":INPUT "Vertical distance above feed tank, HR=15 ft  ==>",HR$:
INPUT "Diameter of pumping chamber, DPC=0.33 ft  ==>",DPC$
150 LO$="":LR$="":AR$="":INPUT "Total length of horizontal line, LO=10 ft  ==>",
LO$:INPUT "Length of horizontal line above feed tank, LR=10 ft  ==>",LR$:INPUT "
Area ratio for the diffuser, AR=2.5  ==>",AR$
160 IF LEN(HO$)=0 THEN HO=23! ELSE HO =VAL(HO$)
170 IF LEN(HF$)=0 THEN HF=8! ELSE HF=VAL(HF$)
180 IF LEN(HPC$)=0 THEN HPC=1! ELSE HPC=VAL(HPC$)
190 IF LEN(HR$)=0 THEN HR=15! ELSE HR=VAL(HR$)
200 IF LEN(DPC$)=0 THEN DPC=.33 ELSE DPC=VAL(DPC$)
210 IF LEN(LO$)=0 THEN LO=10! ELSE LO=VAL(LO$)
220 IF LEN(LR$)=0 THEN LR=10! ELSE LR=VAL(LR$)
230 IF LEN(AR$)=0 THEN AR=2.5 ELSE AR=VAL(AR$)
240 PRINT:PRINT "Enter the loss coefficients :"
250 CP$="":CDRF$="":INPUT "Pressure recovery coefficient of the diffuser, CP=0.6
 ==>",CP$:INPUT "Discharge coefficient for losses during refill, CDRF=0.7 ==>",C
DRF$
260 K$="":E$="":CD$="":INPUT "Discharge coefficient for nozzle, CD=0.95 ==>",CD$
:INPUT "Total minor losses coefficient-elbow, valves, etc., K=3.0  ==>",K$:INPUT
 "Roughness factor in friction factor equation, E=0  ==>",E$
270 IF LEN(CP$)=0 THEN CP=.6 ELSE CP=VAL(CP$)
280 IF LEN(CDRF$)=0 THEN CDRF=.7 ELSE CDRF=VAL(CDRF$)
290 IF LEN(K$)=0 THEN K=3! ELSE K=VAL(K$)
300 IF LEN(E$)=0 THEN E=0! ELSE E=VAL(E$)
310 IF LEN(CD$)=0 THEN CD=.95 ELSE CD=VAL(CD$)
320 CLS:NME$="":DESC$="":INPUT "Do you wish to save the input data (Y or N)";ANS
W$:IF ANSW$="y" OR ANSW$="Y" THEN GOSUB 1070
330 IF LEN(DESC$)=0 THEN DESC$="NONE"
340 IF LEN(NME$)=0 THEN NME$="NONE"
350 CLS:LOCATE 10,30:COLOR 23:PRINT "Processing.......":LPRINT :LPRINT "Program
: VARIABLE":LPRINT "Data-Set Description : ";DESC$:LPRINT "Data file name : ";NM
E$:LPRINT "Date : ";DATE$;TAB(67);" Time : ";TIME$:COLOR 7
```

**Exhibit A.1. BASIC program used to calculate the average flow rate delivered to a receiver tank for specific input pressure as a function of the throat area of the RFD.**

```
360 LPRINT "==================================================================
==============":LPRINT TAB(40);"Input data "
370 LPRINT " HO(ft) HF(ft) HR(ft) LO(ft) LR(ft) HPC(ft) DPC(ft) CP CDRF  AR  K
 CD   E(ft)"
380 LPRINT " ------ ------ ------ ------ ------ ------- ------- -- ---- --- ---
---- -------"
390 LPRINT USING " ##.## ";HO;HF;HR;LO;LR;HPC;DPC;CP;
400 LPRINT USING "#.# ";CDRF;AR;K;
410 LPRINT USING "#.## ";CD;
420 LPRINT USING ".#####";E
430 LPRINT "==================================================================
==============":LPRINT
440 LPRINT "Definition of input terms :";TAB(60);"Definition of output terms :":
LPRINT " AR - Diffuser area ratio";TAB(60);" AT - Diffuser throat area":LPRINT"
CD - Nozzle discharge coefficient";TAB(60);" DO - Output line diameter"
450 LPRINT" CDRF - Refill discharge coefficient";TAB(60);" DT - Diffuser throat
diameter":LPRINT" CP - Diffuser pressure recovery coefficient";TAB(60);" DTP - P
umping time":LPRINT" DPC - Diameter of pumping chamber";TAB(60);" DTRF - Refill
time"
460  LPRINT" HF - Height of fluid in feed tank";TAB(60);" PI - Motivation pressu
re"
470 LPRINT" HO - Vertical distance between RFD and receiver";TAB(60);" QI - Flow
 rate from nozzle":LPRINT" HPC - Height of pumping chamber";TAB(60);" QO - Flow
rate leaving diffuser"
480 LPRINT" HR - Vertical distance above feed tank";TAB(60);" QRA - Average flow
 rate to receiver":LPRINT" LO - Total horizontal distance to receiver from RFD";
TAB(60);" RE - Reynolds number":LPRINT" LR - Horizontal distance to receiver abo
ve feed tank";
490 LPRINT TAB(60);" SPLIT - Percentage of pump chamber transferred":LPRINT TAB(
60);" VL - Fallback volume":LPRINT TAB(60);" VPC - Volume of pumping chamber"
500 G=32.2:GC=32.2
510 APC=3.14*DPC*DPC/4
520 F=0
530 VPC=APC*HPC:VPCG=VPC*7.48:LPRINT USING "VPC(gal) = ##.### ";VPCG
540 PI=15
550 LPRINT
560 LPRINT USING "PI(psig) = ##  ";PI
570 LPRINT "  AT(sqft) DT(in) QRA(gpm)   QI(gpm)   QO(gpm)   VL(gal)  DTP(sec) D
TRF(sec)    RE    SPLIT(%)  DO(IN) "
580 LPRINT "  -------- ------ ---------  --------  --------  -------- -------- -
--------  ------  --------  ------"
590 AT=.0001
600 DT=SQR(4*AT/3.14)
610 VL=AR*AT*(HR+LR)
620 DTI=DT*12
630 DTRF=(APC/(AT*CDRF))*(SQR(2*HF/G)-SQR(2*(HF-HPC)/G))
640 QI=CD*AT*SQR((2*GC*144*PI/ROE)-2*G*HF+G*HPC)
650 AO=AR*AT
660 DO=DT*SQR(AR)
670 QOG=0:F=0
680 LOSS=(F*(HO+LO)/DO+K)/AR^2
```

**Exhibit A.1. (Continued)**

```
690 QO=AT*SQR(((2*GC*144*PI/ROE)-2*G*HO)/(1-CP+LOSS))
700 VO=QO/AO
710 RE=VO*DO/NU
720 FG=.02
730 F=(-2*.4343*LOG(E/(DO*3.7)+2.51/(RE*SQR(FG))))^(-2)
740 ERF=(F-FG)/F
750 IF ABS(ERF)<.01 GOTO 780 ELSE GOTO 760
760 FG=F
770 GOTO 730
780 ER=(QO-QOG)/QO
790 IF ABS(ER)<.01 GOTO 820 ELSE GOTO 800
800 QOG=QO
810 GOTO 680
820 DTP=VPC/QI
830 QRA=(QO*DTP-VL)/(DTP+DTRF)
840    QL=VPC-QO*DTP
850    DOI=DO*12
860    SPLIT=QO*DTP*100/VPC
870 C=60*7.48
880 QRA=QRA*C
890 QI=QI*C
900 QO=QO*C
910     VLI=VL*7.48
920 IF QRA<0 GOTO 930 ELSE GOTO 940
930 QRA=0
940 LPRINT USING " ###.####  "; AT;
950 LPRINT USING "#.### ";DTI;
960 LPRINT USING " ###.###  ";QRA;QI;QO;VLI;
970 LPRINT USING "  ###.#   ";DTP;DTRF;
980 LPRINT USING "######. ";RE;
990 LPRINT USING "  ###.#  ";SPLIT;
1000 LPRINT USING "   #.###   ";DOI
1010 IF QRA=0 GOTO 1040 ELSE GOTO 1020
1020 AT=AT+.0001
1030 GOTO 600
1040 PI=PI+5
1050 IF PI<52 GOTO 550 ELSE GOTO 1060
1060 CLS:WIDTH "LPT1:",80:LPRINT CHR$(18);CHR$(27)+"O":KEY ON:STOP
1070 PRINT :PRINT "Files on default drive :":PRINT :FILES
1080 PRINT :INPUT "Enter filename for data storage :";NME$:PRINT "NOTE : Any exi
sting data in ";NME$;" will be lost":PRINT "Do you wish to continue (Y or N)":IN
PUT ANSW$:IF ANSW$="y" OR ANSW$="Y" THEN OPEN NME$ FOR OUTPUT AS #1:GOTO 1100
1090 GOTO 1080
1100 DESC$="":INPUT "Enter run description : ";DESC$:PRINT #1,DESC$:PRINT #1,NU,
ROE:PRINT #1,HO,HF,HPC,HR,DPC,LO,LR,AR:PRINT #1,CP,CDRF,K,E,CD
1110 CLOSE #1:RETURN
1120 CLS:INPUT "Enter data file name for input";NME$:OPEN NME$ FOR INPUT AS #1
1130 INPUT #1,DESC$:INPUT #1,NU,ROE:INPUT #1,HO,HF,HPC,HR,DPC,LO,LR,AR:INPUT #1,
CP,CDRF,K,E,CD
1140 CLOSE #1:RETURN
```

**Exhibit A.1. (Continued)**

For the conditions imposed on this pumping system, the output of the computer program is presented in Fig. A.2 as a plot of the average volumetric flow rate delivered to the receiver tank vs the throat area of the RFD with the input or pumping chamber pressure as a parameter. For a given supply pressure and pumping chamber volume, the average flow rate increases to a maximum as the throat area of the RFD is increased, thereby reducing the refill resistance and allowing the pumping chamber to fill more rapidly. Because the outlet line diameter varies directly with the RFD throat area, the fallback volume contained in the outlet lines also increases. Larger fallback volumes serve to decrease the average delivered flow rate to a receiver tank. Eventually, as the throat area continues to be increased, the average flow rate improvements from the decreasing refill resistance are overshadowed by the penalties paid by the larger fallback volumes.

Inspection of this figure demonstrates the quadratic nature of the average output flow as a function of the RFD throat area for a given input pressure and the existance of an optimum throat area. For the required flow rate of 0.35 gpm, it is evident that a minimum input pressure of slightly more than 30 psig is required. The optimum throat area for this pressure is about 0.0004 $ft^2$, indicating a nozzle exit/receiver inlet diameter of 0.27 in. This yields an output line inside diameter of about 0.68 in.

It is interesting to note that for this RFD throat size, increasing the input pressure to, perhaps, 50 psig to increase the output flow still enables the system to operate very close to optimum conditions, while decreasing the input pressure to 25 psig also causes very little

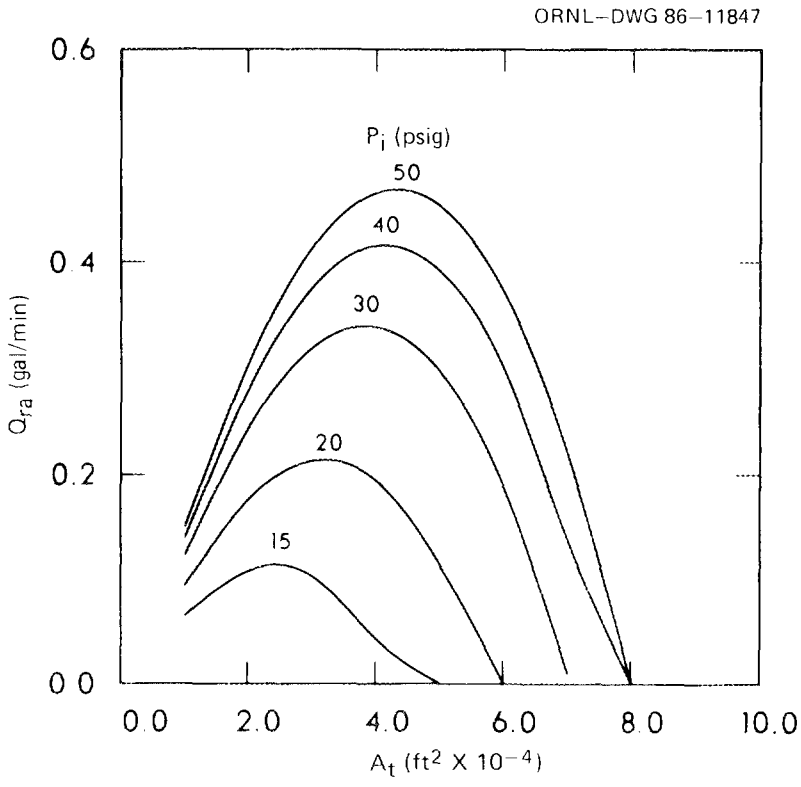


**Fig. A.2. Average output flow as a function of RFD throat area and input pressure.**

deviation from optimum performance. A copy of the program output for input pressures of 15, 20, and 25 psig is presented in Exhibit A.2.

The size of the pumping chamber was arbitrarily set for this problem. To illustrate the effect of pumping chamber volume on the performance of the system, the average output volumetric flow rate is plotted versus the diameter of the pumping chamber in Fig. A.3. For this analysis, the input pressure and RFD throat area were held constant at 40 psig and 0.0004 $ft^2$, respectively. All conditions listed in Fig. A.1 are unchanged, with the exception of the pumping chamber diameter. This figure rather vividly illustrates the significant impact an increase in pumping chamber size can have on overall system performance. Although constraints are normally imposed on the physical size of the pumping chamber, it is important to remember that every effort should be made in keeping it as large as possible. It perhaps should also be noted that in Fig. A.3., the flow rate calculated and plotted is not the optimum, except at the diameter of 0.33 ft.

```
Program : VARIABLE
Data-Set Description : APPENDIX A
Data file name : PUMP.DAT
Date : 12-15-1986                                                    Time : 09:57:08
==============================================================================
                                   Input data
 HO(ft) HF(ft) HR(ft) LO(ft) LR(ft) HPC(ft) DPC(ft) CP CDRF  AR  K   CD   E(ft)
 ------ ------ ------ ------ ------ ------- ------- -- ---- --- --- ---- -------
 23.00   8.00  15.00  10.00  10.00   1.00   0.33   0.60 0.7 2.5 3.0 0.95 .00000
==============================================================================

Definition of input terms :                          Definition of output terms :
 AR - Diffuser area ratio                             AT - Diffuser throat area
 CD - Nozzle discharge coefficient                    DO - Output line diameter
 CDRF - Refill discharge coefficient                  DT - Diffuser throat diameter
 CP - Diffuser pressure recovery coefficient          DTP - Pumping time
 DPC - Diameter of pumping chamber                    DTRF - Refill time
 HF - Height of fluid in feed tank                    PI - Motivation pressure
 HO - Vertical distance between RFD and receiver      QI - Flow rate from nozzle
 HPC - Height of pumping chamber                      QO - Flow rate leaving diffuser
 HR - Vertical distance above feed tank               QRA - Average flow rate to receiver
 LO - Total horizontal distance to receiver from RFD  RE - Reynolds number
 LR - Horizontal distance to receiver above feed tank SPLIT - Percentage of pump chamber transferred
                                                      VL - Fallback volume
                                                      VPC - Volume of pumping chamber

VPC(gal) =  0.639

PI(psig) = 15
  AT(sqft) DT(in) QRA(gpm)   QI(gpm)   QO(gpm)   VL(gal)  DTP(sec) DTRF(sec)    RE    SPLIT(%)  DO(IN)
  -------- ------ --------- -------- -------- -------- -------- --------- ------ -------- ------
   0.0001  0.135   0.065     1.782    0.362    0.047    21.5     55.6     5758   20.3     0.214
   0.0002  0.192   0.108     3.563    0.909    0.093    10.8     27.8    10219   25.5     0.303
   0.0003  0.235   0.104     5.345    1.543    0.140     7.2     18.5    14173   28.9     0.371
   0.0004  0.271   0.043     7.127    2.237    0.187     5.4     13.9    17791   31.4     0.428
   0.0005  0.303   0.000     8.908    2.975    0.234     4.3     11.1    21165   33.4     0.479
```

**Exhibit A.2. Output from program given in Exhibit A.1.**

PI(psig) = 20

| AT(sqft) | DT(in) | QRA(gpm) | QI(gpm) | QO(gpm) | VL(gal) | DTP(sec) | DTRF(sec) | RE | SPLIT(%) | DO(IN) |
|---|---|---|---|---|---|---|---|---|---|---|
| 0.0001 | 0.135 | 0.094 | 2.127 | 0.537 | 0.047 | 18.0 | 55.6 | 8547 | 25.3 | 0.214 |
| 0.0002 | 0.192 | 0.176 | 4.254 | 1.340 | 0.093 | 9.0 | 27.8 | 15066 | 31.5 | 0.303 |
| 0.0003 | 0.235 | 0.213 | 6.382 | 2.269 | 0.140 | 6.0 | 18.5 | 20833 | 35.5 | 0.371 |
| 0.0004 | 0.271 | 0.194 | 8.509 | 3.280 | 0.187 | 4.5 | 13.9 | 26084 | 38.5 | 0.428 |
| 0.0005 | 0.303 | 0.114 | 10.636 | 4.354 | 0.234 | 3.6 | 11.1 | 30968 | 40.9 | 0.479 |
| 0.0006 | 0.332 | 0.000 | 12.763 | 5.477 | 0.281 | 3.0 | 9.3 | 35566 | 42.9 | 0.525 |

PI(psig) = 25

| AT(sqft) | DT(in) | QRA(gpm) | QI(gpm) | QO(gpm) | VL(gal) | DTP(sec) | DTRF(sec) | RE | SPLIT(%) | DO(IN) |
|---|---|---|---|---|---|---|---|---|---|---|
| 0.0001 | 0.135 | 0.111 | 2.424 | 0.676 | 0.047 | 15.8 | 55.6 | 10758 | 27.9 | 0.214 |
| 0.0002 | 0.192 | 0.216 | 4.848 | 1.682 | 0.093 | 7.9 | 27.8 | 18920 | 34.7 | 0.303 |
| 0.0003 | 0.235 | 0.276 | 7.272 | 2.840 | 0.140 | 5.3 | 18.5 | 26080 | 39.1 | 0.371 |
| 0.0004 | 0.271 | 0.280 | 9.696 | 4.100 | 0.187 | 4.0 | 13.9 | 32606 | 42.3 | 0.428 |
| 0.0005 | 0.303 | 0.223 | 12.120 | 5.436 | 0.234 | 3.2 | 11.1 | 38668 | 44.9 | 0.479 |
| 0.0006 | 0.332 | 0.100 | 14.544 | 6.833 | 0.281 | 2.6 | 9.3 | 44370 | 47.0 | 0.525 |
| 0.0007 | 0.358 | 0.000 | 16.968 | 8.282 | 0.327 | 2.3 | 7.9 | 49787 | 48.8 | 0.567 |

**Exhibit A.2. (Continued)**

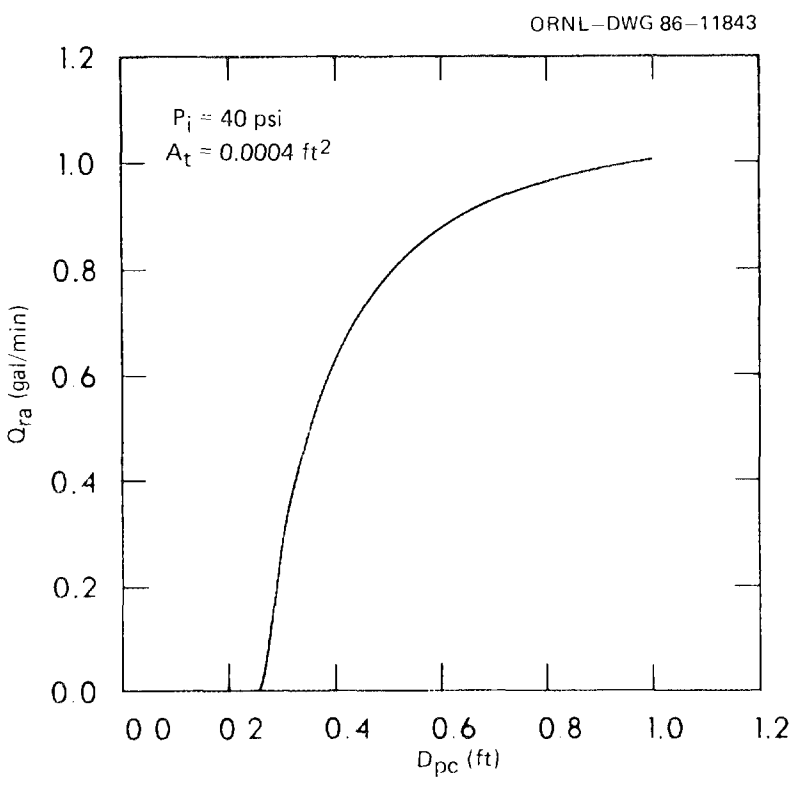


**Fig. A.3. Variation of output flow with pumping chamber diameter.**

## A.3 REFERENCES

1. Fox, R. W., and S. J. Kline, "Flow Regime Data and Design Methods for Curved Subsonic Diffusers," *J. Basic Eng.* **84**, 303–12.

2. Runstadler, Jr., P. W., F. X. Dolan, and R. C. Dean, Jr., *Diffuser Data Book*, TN-186, Creare Technical Information Service, Hanover, N.J., 1975.

3. White, F. M., *Fluid Mechanics*, 2d ed., McGraw-Hill, New York, 1986.

4. Whitaker, S., *Introduction to Fluid Mechanics*, Prentice-Hall, Englewood Cliffs, N.J., 1968.

## Appendix B

## EXAMPLE DESIGN TECHNIQUE WITH FIXED OUTPUT LINE DIAMETER

In presenting an example of the alternate design procedure discussed in Sect. 2.4, it is assumed that the geometric layout and specifications are identical to that discussed in Appendix A (Fig. A.1). Furthermore, we will continue to use English units in the example and program.

The program used to calculate the average flow rate delivered to the receiver tank for a specific input pressure and output line diameter is presented in Exhibit B.1. Sample output is given in Exhibit B.2. The program variables are the same as those listed in Appendix A.

The output of the computer program for the conditions imposed are presented in Fig. B.1 and B.2 as plots of the average output flow rate vs the throat area with the input pressures as a parameter. Figure B.1 is for an output line diameter of 0.018 ft, while Fig. B.2 is for an output line diameter of 0.0255 ft (about twice the cross-sectional area).

In Fig. B.1, the data began at a throat area of 0.0001 $ft^2$. For a diffuser area ratio of 2.5, this corresponds to the point where the diffuser exit diameter is equal to the output line diameter. As the throat area is increased, the output diffuser area increases proportionally, necessitating a contraction in the output line area as depicted in Fig. 8. For this same reason, the data in Fig. B.2 begin at a throat area of 0.0002 $ft^2$.

As is evident from inspection of Figs. B.1 and B.2, for a given output line area and input pressure, the average output flow rate decreased in almost a linear fashion. As would be expected, increasing input pressure as well as output line area results in an increase in average output flow rate.

On both figures, the initial value of the average output flow rate corresponds to the situation of the diffuser output area being equal to the output line area. These values correspond to the values plotted in Fig. A.2.

For a given input pressure, the data in Figs. B.1 and B.2 decrease for a given output line diameter, while the average output flow rate increases to a maximum in Fig. A.2 when the output line is allowed to increase proportionally with the RFD throat diameter.

The reason for this decrease in average output flow rate with increasing throat area is that as the throat area is increased, the input flow to the RFD increases, thus decreasing the system pump time. Because the instantaneous RFD output flow rate is found to remain fairly constant, this results in a smaller volume of fluid leaving the RFD. Although the refill time also decreased with increasing throat area, it is found that the decrease in system cycle time is more than offset by the decrease in fluid leaving the RFD.

```
10 REM PROGRAM NAME : FIXED
20 REM DATE : SEPTEMBER 11, 1986
30 REM FIXED OUTPUT DIAMETER, G. V. SMITH, B. E. LEWIS
40 REM APPENDIX B
50 WIDTH "LPT1:",132:KEY OFF
60 LPRINT CHR$(27)+CHR$(15);CHR$(12);CHR$(27)+"N"+CHR$(2)
70 CLS:PRINT "Pulsatile fluidic pump design program : FIXED":PRINT "Fixed outlet
 line diameter":PRINT DATE$;TAB(60);TIME$:PRINT
80 PRINT "Do you wish to enter data from the keyboard or a data file (K or F)":I
NPUT ANSW$:IF ANSW$="F" OR ANSW$="f" THEN GOSUB 1120:GOTO 330
90 CLS:NU$="":ROE$="":PRINT:PRINT "Enter the fluid charateristics or press RETUR
N for the default values:":PRINT :INPUT "Viscosity, NU=0.00001 lb/ft-s  ==>",NU$
:INPUT "Density, ROE=62.4 lb/ft^3  ==>",ROE$
100 IF LEN(NU$)=0 THEN NU=.00001 ELSE NU=VAL(NU$)
110 IF LEN(ROE$)=0 THEN ROE=62.4 ELSE ROE$=VAL(ROE$)
120 PRINT :PRINT :PRINT "Enter the system characteristics or press RETURN for th
e default values:":PRINT
130 HO$="":HF$="":HPC$="":INPUT "Vertical distance from RFD to receiver tank, HO
=23 ft  ==>",HO$:INPUT "Height of fluid in feed tank from RFD, HF=8 ft  ==>",HF$
:INPUT "Height of pumping chamber, HPC=1 ft  ==>",HPC$
140 HR$="":DL$="":DPC$="":INPUT "Vertical distance fluid is pumped, HR=15 ft  ==
>",HR$:INPUT "Diameter of output line, DL=0.018 ft  ==>",DL$:INPUT "Diameter of
pumping chamber, DPC=0.33 ft  ==>",DPC$
150 LO$="":LR$="":AR$="":INPUT "Length of horizontal line, LO=10 ft  ==>",LO$:IN
PUT "Length of horizontal line, LR=10 ft  ==>",LR$:INPUT "Area ratio for the dif
fuser, AR=2.5  ==>",AR$
160 IF LEN(HO$)=0 THEN HO=23! ELSE HO =VAL(HO$)
170 IF LEN(HF$)=0 THEN HF=8! ELSE HF=VAL(HF$)
180 IF LEN(HPC$)=0 THEN HPC=1! ELSE HPC=VAL(HPC$)
190 IF LEN(HR$)=0 THEN HR=15! ELSE HR=VAL(HR$)
200 IF LEN(DL$)=0 THEN DL=.018 ELSE DL=VAL(DL$)
210 IF LEN(DPC$)=0 THEN DPC=.33 ELSE DPC=VAL(DPC$)
220 IF LEN(LO$)=0 THEN LO=10! ELSE LO=VAL(LO$)
230 IF LEN(LR$)=0 THEN LR=10! ELSE LR=VAL(LR$)
240 IF LEN(AR$)=0 THEN AR=2.5 ELSE AR=VAL(AR$)
250 PRINT:PRINT:PRINT "Enter the loss coefficients :":PRINT
260 CP$="":CDRF$="":INPUT "Pressure recovery coefficient of the diffuser, CP=0.6
 ==>",CP$:INPUT "Discharge coefficient for losses during refill, CDRF=0.7 ==>",C
DRF$
270 K$="":E$="":CD$="":INPUT "Discharge coefficient for nozzle, CD=0.95 ==>",CD$
:INPUT "Total minor losses coefficient-elbow, valves, etc., K=3.0  ==>",K$:INPUT
 "Roughness factor in friction factor equation, E=0  ==>",E$
280 IF LEN(CP$)=0 THEN CP=.6 ELSE CP=VAL(CP$)
290 IF LEN(CDRF$)=0 THEN CDRF=.7 ELSE CDRF=VAL(CDRF$)
300 IF LEN(K$)=0 THEN K=3! ELSE K=VAL(K$)
310 IF LEN(E$)=0 THEN E=0! ELSE E=VAL(E$)
320 CLS:NME$="":DESC$="":INPUT "Do you wish to save the input data (Y or N)";ANS
W$:IF ANSW$="y" OR ANSW$="Y" THEN GOSUB 1070
330 IF LEN(DESC$)=0 THEN DESC$="NONE"
340 IF LEN(NME$)=0 THEN NME$="NONE"
```

**Exhibit B.1. BASIC program used to calculate the average flow rate delivered to a receiver tank for a specific input pressure and output line diameter.**

```
350 CLS:LOCATE 10,30:COLOR 23:PRINT "Processing..........";LPRINT :LPRINT "Progr
am : FIXED":LPRINT"Data-Set Description : ";DESC$:LPRINT "Data file name : ";NME
$:LPRINT "Date : ";DATE$;TAB(80);"TIME : ";TIME$:COLOR 7
360 LPRINT "=================================================================
==========================":LPRINT TAB(40);"Input Data "
370 IF LEN(CD$)=0 THEN CD=.95 ELSE CD=VAL(CD$)
380 LPRINT " HO(ft) HF(ft) HR(ft) LO(ft) LR(ft) HPC(ft) DPC(ft) CP  CDRF  DL(ft)
  K    E(ft)   CD     AR"
390 LPRINT " ------ ------ ------ ------ ------ ------- ------- --- ----- ------
 ---- ------ ------  ----"
400 LPRINT USING " ##.## ";HO;HF;HR;LO;LR;HPC;DPC;CP;
410 LPRINT USING "#.### ";CDRF;DL;
420 LPRINT USING "##.#  ";K;
430 LPRINT USING ".#####";E;
440 LPRINT USING " ##.###";CD;
450 LPRINT USING " ##.## ";AR
460 LPRINT "=================================================================
==========================":LPRINT
470 LPRINT"Definition of input terms :";TAB(60);"Definition of output terms :":L
PRINT " AR - Diffuser area ratio";TAB(60);" AT - Diffuser throat area":LPRINT" C
D - Nozzle discharge coefficient";TAB(60);" DT - Diffuser throat diameter"
480 LPRINT " CDRF - Refill discharge coefficient";TAB(60);" DTP - Pumping time":
LPRINT " CP - Diffuser pressure recovery coefficient";TAB(60);" DTRF - Refill ti
me":LPRINT " DL - Output line diameter";TAB(60);" PI - Motivation pressure"
490 LPRINT " DPC - Diameter of pumping chamber";TAB(60);" QI - Flow rate from no
zzle":LPRINT " HF - Height of fluid in feed tank";TAB(60);" QO - Flow rate leavi
ng diffuser"
500 LPRINT " HO - Vertical distance between RFD and receiver";TAB(60);" QRA - Av
erage flow rate to receiver":LPRINT " HPC - Height of pumping chamber";TAB(60);"
 RE - Reynolds number"
510 LPRINT " HR - Vertical distance above feed tank";TAB(60);" SPLIT - Percentag
e of pump chamber transferred":LPRINT " LO - Total horizontal distance to receiv
er from RFD";TAB(60);" VL - Fallback volume"
520 LPRINT " LR - Horizontal distance to receiver above feed tank";TAB(60);" VPC
 - Volume of pumping chamber"
530 G=32.2:GC=32.2
540 APC=3.14*DPC*DPC/4
550 VPC=APC*HPC
560 AL=(3.14*DL^2)/4
570 VL=AL*(HR+LR)
580 PI=15
590 VPCG=VPC*7.48:LPRINT:LPRINT USING "VPC(gal) = ###.###";VPCG
600 LPRINT
610 LPRINT USING "PI(psig) = ##. ";PI
620 LPRINT "   AT(sqft) DT(in) QRA(gpm)   QI(gpm)   QO(gpm)  VL(gal)  DTP(sec) D
TRF(sec)    RE    SPLIT(%)"
630 LPRINT "  --------- ------ ---------  --------  -------- -------- -------- -
--------  ------ ---------"
640 AT=.0001
650 DT=SQR(4*AT/3.14)
660 DTI=DT*12
```

**Exhibit B.1. (Continued)**

```
670 DTRF=(APC/(AT*CDRF))*(SQR(2*HF/G)-SQR(2*(HF-HPC)/G))
680 QI=CD*AT*SQR((2*GC*144*PI/ROE)-2*G*HF+G*HPC)
690 QOG=0:F=0
700 LOSS=(F*(HO+LO)/DL+K)/AL^2
710 QO=SQR(((2*GC*144*PI/ROE)-2*G*HO)/(((1-CP)/AT^2)+LOSS))
720 VEL=QO/AL
730 RE=VEL*DL/NU
740 FG=.02
750 F=(-2*.4343*LOG(E/(DL*3.7)+2.51/(RE*SQR(FG))))^(-2)
760 ERF=(F-FG)/F
770 IF ABS(ERF)<.01 GOTO 800 ELSE GOTO 780
780 FG=F
790 GOTO 750
800 ER=(QO-QOG)/QO
810 IF ABS(ER)<.01 GOTO 840 ELSE GOTO 820
820 QOG=QO
830 GOTO 700
840 DTP=VPC/QI
850 QRA=(QO*DTP-VL)/(DTP+DTRF)
860    QL=VPC-QO*DTP
870    SPLIT=QO*DTP*100/VPC
880    VLI=VL*7.48
890 C=60*7.48
900 QRA=QRA*C
910 QI=QI*C
920 QO=QO*C
930 IF QRA<0 GOTO 940 ELSE GOTO 950
940 QRA=0
950 LPRINT USING " ###.#####  "; AT;
960 LPRINT USING "#.### ";DTI;
970 LPRINT USING " ###.###  ";QRA;QI;QO;VLI;
980 LPRINT USING " ###.#   ";DTP;DTRF;
990 LPRINT USING "  ######. ";RE;
1000 LPRINT USING "  ###.#  ";SPLIT
1010 IF QRA=0 GOTO 1040 ELSE GOTO 1020
1020 AT=AT+.0001
1030 GOTO 650
1040 PI=PI+5
1050 IF PI<52 GOTO 600 ELSE GOTO 1060
1060 CLS:WIDTH "LPT1:",80:LPRINT CHR$(18);CHR$(27)+"O":KEY ON:STOP
1070 PRINT :PRINT "Files on default drive :":PRINT :FILES
1080 PRINT:INPUT "Enter filename for data storage :";NME$:PRINT "NOTE : Any exis
ting data in ";NME$;" will be lost":PRINT "Do you wish to continue (Y or N)":INP
UT ANSW$:IF ANSW$="y" OR ANSW$="Y" THEN OPEN NME$ FOR OUTPUT AS #1:GOTO 1100
1090 GOTO 1080
1100 DESC$="":INPUT "Enter run description : ";DESC$:PRINT  #1,DESC$:PRINT #1,NU
,ROE:PRINT #1,HO,HF,HPC,HR,DL,DPC,LO,LR,AR:PRINT #1,CP,CDRF,K,E,CD
1110 CLOSE #1:RETURN
1120 CLS:INPUT "Enter data file name for input : ";NME$:OPEN NME$ FOR INPUT AS #
1
1130 INPUT #1,DESC$:INPUT #1,NU,ROE:INPUT #1,HO,HF,HPC,HR,DL,DPC,LO,LR,AR:INPUT
#1,CP,CDRF,K,E,CD
1140 CLOSE #1:RETURN
```

**Exhibit B.1. (Continued)**

Program : FIXED
Data-Set Description : APPENDIX B
Data file name : PUMP2.DAT
Date : 12-15-1986 TIME : 10:07:51

Input Data

| HO(ft) | HF(ft) | HR(ft) | LO(ft) | LR(ft) | HPC(ft) | DPC(ft) | CP | CDRF | DL(ft) | K | E(ft) | CD | AR |
|---|---|---|---|---|---|---|---|---|---|---|---|---|---|
| 23.00 | 8.00 | 15.00 | 10.00 | 10.00 | 1.00 | 0.33 | 0.60 | 0.700 | 0.018 | 3.0 | .00000 | 0.950 | 2.50 |

Definition of input terms :
- AR - Diffuser area ratio
- CD - Nozzle discharge coefficient
- CDRF - Refill discharge coefficient
- CP - Diffuser pressure recovery coefficient
- DL - Output line diameter
- DPC - Diameter of pumping chamber
- HF - Height of fluid in feed tank
- HO - Vertical distance between RFD and receiver
- HPC - Height of pumping chamber
- HR - Vertical distance above feed tank
- LO - Total horizontal distance to receiver from RFD
- LR - Horizontal distance to receiver above feed tank

Definition of output terms :
- AT - Diffuser throat area
- DT - Diffuser throat diameter
- DTP - Pumping time
- DTRF - Refill time
- PI - Motivation pressure
- QI - Flow rate from nozzle
- QO - Flow rate leaving diffuser
- QRA - Average flow rate to receiver
- RE - Reynolds number
- SPLIT - Percentage of pump chamber transferred
- VL - Fallback volume
- VPC - Volume of pumping chamber

VPC(gal) = 0.639

PI(psig) = 15

| AT(sqft) | DT(in) | QRA(gpm) | QI(gpm) | QO(gpm) | VL(gal) | DTP(sec) | DTRF(sec) | RE | SPLIT(%) |
|---|---|---|---|---|---|---|---|---|---|
| 0.00010 | 0.135 | 0.066 | 1.782 | 0.370 | 0.048 | 21.5 | 55.6 | 5838 | 20.8 |
| 0.00020 | 0.192 | 0.031 | 3.563 | 0.376 | 0.048 | 10.8 | 27.8 | 5932 | 10.6 |
| 0.00030 | 0.235 | 0.000 | 5.345 | 0.377 | 0.048 | 7.2 | 18.5 | 5950 | 7.1 |

PI(psig) = 20

| AT(sqft) | DT(in) | QRA(gpm) | QI(gpm) | QO(gpm) | VL(gal) | DTP(sec) | DTRF(sec) | RE | SPLIT(%) |
|---|---|---|---|---|---|---|---|---|---|
| 0.00010 | 0.135 | 0.096 | 2.127 | 0.549 | 0.048 | 18.0 | 55.6 | 8663 | 25.8 |
| 0.00020 | 0.192 | 0.059 | 4.254 | 0.559 | 0.048 | 9.0 | 27.8 | 8817 | 13.1 |
| 0.00030 | 0.235 | 0.021 | 6.382 | 0.561 | 0.048 | 6.0 | 18.5 | 8846 | 8.8 |
| 0.00040 | 0.271 | 0.000 | 8.509 | 0.562 | 0.048 | 4.5 | 13.9 | 8857 | 6.6 |

PI(psig) = 25

| AT(sqft) | DT(in) | QRA(gpm) | QI(gpm) | QO(gpm) | VL(gal) | DTP(sec) | DTRF(sec) | RE | SPLIT(%) |
|---|---|---|---|---|---|---|---|---|---|
| 0.00010 | 0.135 | 0.113 | 2.424 | 0.691 | 0.048 | 15.8 | 55.6 | 10903 | 28.5 |
| 0.00020 | 0.192 | 0.076 | 4.848 | 0.704 | 0.048 | 7.9 | 27.8 | 11107 | 14.5 |
| 0.00030 | 0.235 | 0.037 | 7.272 | 0.707 | 0.048 | 5.3 | 18.5 | 11146 | 9.7 |
| 0.00040 | 0.271 | 0.000 | 9.696 | 0.708 | 0.048 | 4.0 | 13.9 | 11160 | 7.3 |

**Exhibit B.2. Output from program given in Exhibit B.1.**

PI(psig) = 30

| AT(sqft) | DT(in) | QRA(gpm) | QI(gpm) | QO(gpm) | VL(gal) | DTP(sec) | DTRF(sec) | RE | SPLIT(%) |
|---|---|---|---|---|---|---|---|---|---|
| 0.00010 | 0.135 | 0.125 | 2.688 | 0.813 | 0.048 | 14.3 | 55.6 | 12820 | 30.2 |
| 0.00020 | 0.192 | 0.088 | 5.377 | 0.829 | 0.048 | 7.1 | 27.8 | 13068 | 15.4 |
| 0.00030 | 0.235 | 0.047 | 8.065 | 0.832 | 0.048 | 4.8 | 18.5 | 13116 | 10.3 |
| 0.00040 | 0.271 | 0.007 | 10.753 | 0.833 | 0.048 | 3.6 | 13.9 | 13133 | 7.7 |
| 0.00050 | 0.303 | 0.000 | 13.441 | 0.833 | 0.048 | 2.9 | 11.1 | 13141 | 6.2 |

**Exhibit B.2. (Continued)**

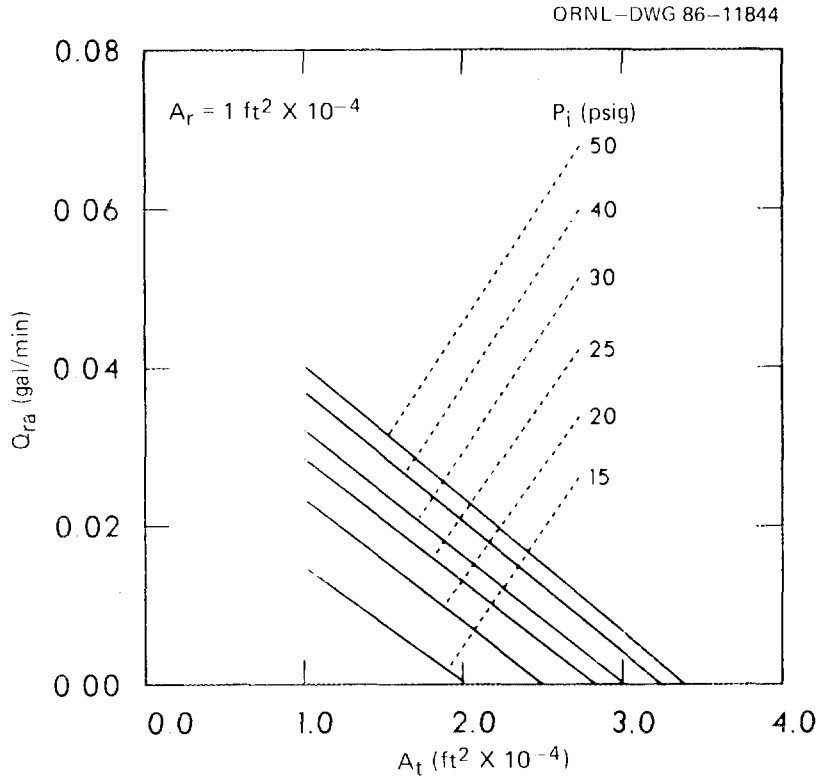


**Fig. B.1. Variation of $Q_{ra}$ with $A_t$ with constant output line area of 0.0001 ft$^2$.**

Another way of viewing the reason for the decrease in average output flow with increasing throat area, is that as the throat area is increased, the smaller output line imparts a larger load resistance on the output of the RFD. Thus, for a larger input flow, that fraction of fluid leaving the RFD compared to that quantity of fluid entering the RFD decreases. As discussed by Smith and Counce,[1] a larger load resistance on the RFD results in a decrease in normalized flow (output to input) leaving the RFD.

This analysis indicates that this design technique is desirable in situations where the volume of fluid in the output line is very important and where a fluidic pump is being retrofitted into an existing piping system.

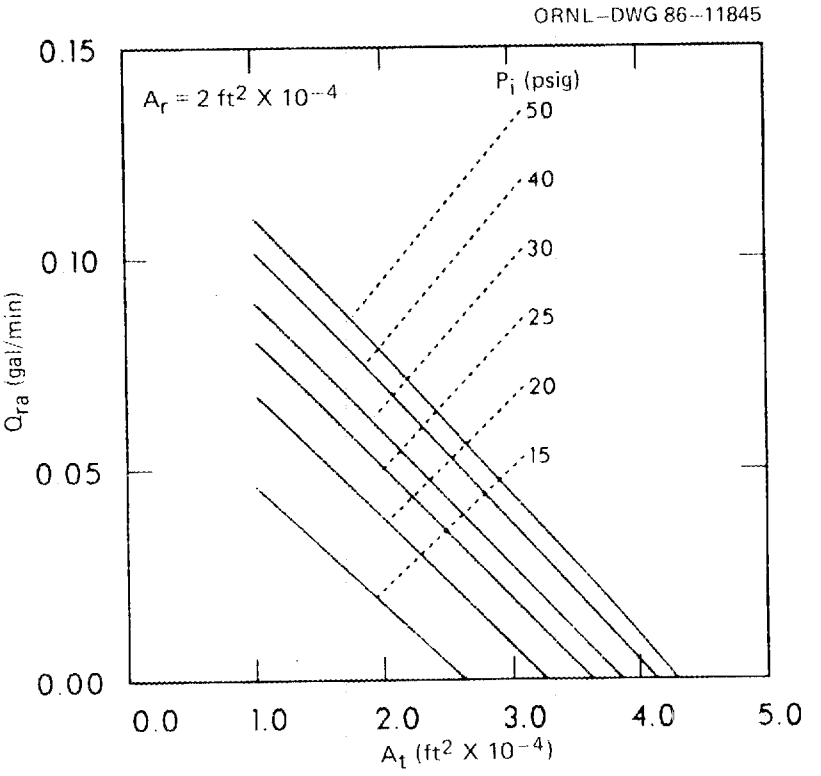


**Fig. B.2. Variation of $Q_{ra}$ with $A_t$ with constant output line area of 0.0002 ft$^2$.**

**ORNL/TM-10281**
**Dist. Category UC-86**

*INTERNAL DISTRIBUTION*

1. D. E. Benker
2. J. F. Birdwell
3. J. O. Blomeke
4–6. W. D. Burch
7. E. D. Collins
8. D. A. Costanzo
9. R. M. Counce
10. S. F. DeMuth
11. R. D. Ehrlich
12. M. J. Feldman
13. R. W. Glass
14. W. S. Groenier
15. T. L. Hebble
16. R. T. Jubin
17. M. V. Keigan
18. E. H. Krieg, Jr.
19–23. B. E. Lewis
24. S. A. Meacham
25. C. F. Metz
26. J. G. Morgan
27. D. R. Moser
28. F. L. Peishel
29. J. H. Shaffer
30–32. R. W. Sharpe
33–35. G. V. Smith
36. B. B. Spencer
37. J. G. Stradley
38. P. Welesko
39–40. T. J. Williams
41. O. O. Yarbro
42–43. Laboratory Records
44. Laboratory Records, ORNL-RC
45. ORNL Patent Section

*EXTERNAL DISTRIBUTION*

46. D. E. Bailey, Director, Division of Fuels and Reprocessing, Office of Facilities, Fuel Cycle, and Test Programs, U.S. Department of Energy, Washington, DC 20545
47. F. P. Baranowski, 1110 Dapple Grey Court, Great Falls, VA 22066
48. S. J. Beard, Vice President, Marketing and Uranium Operations, Exxon Nuclear Company, Inc., 600 108th Avenue, N.E., C-00777, Bellevue, WA 98009
49. M. J. Ohanian, Associate Dean for Research, College of Engineering, 300 Weil Hall, University of Florida, Gainesville, FL 32611
50. J. F. Proctor, Senior Technical Specialist, E. I. du Pont de Nemours and Company, Savannah River Laboratory, Aiken, SC 29801
51. Office of Assistant Manager for Energy Research and Development, DOE-ORO, Oak Ridge, TN 37831

52–143. Given distribution as shown in TIC-4500 under UC-86, Consolidated Fuel Reprocessing Category