MARTIN MARIETTA ENERGY SYSTEMS LIBRARIES
3 4456 0279128 1

ORNL/TM-1372/S1

ornl

OAK RIDGE NATIONAL LABORATORY

MARTIN MARIETTA

HFIR Pressure Vessel and Structural Components Materials Surveillance Program

Supplement 1

OAK RIDGE NATIONAL LABORATORY
CENTRAL RESEARCH LIBRARY
CIRCULATION SECTION
4500N ROOM 175
LIBRARY LOAN COPY
DO NOT TRANSFER TO ANOTHER PERSON
If you wish someone else to see this report, send in name with report and the library will arrange a loan.
UCN-7969 (3 9-77)

R.D. Cheverton
D.M. McGinty
J.R. McWherter
R.K. Nanstad

October 1987

OPERATED BY
MARTIN MARIETTA ENERGY SYSTEMS, INC.
FOR THE UNITED STATES
DEPARTMENT OF ENERGY

ORNL/TM-1372/S1

HFIR PRESSURE VESSEL AND STRUCTURAL COMPONENTS MATERIAL SURVEILLANCE PROGRAM

SUPPLEMENT 1

R. D. Cheverton
D. M. McGinty
J. R. McWherter*
R. K. Nanstad

*Consultant with MidWest Technical, Inc.

Manuscript Completed September 25, 1987

Date Published - October 1987

Prepared by the
OAK RIDGE NATIONAL LABORATORY
Oak Ridge, Tennessee 37831
operated by
MARTIN MARIETTA ENERGY SYSTEMS INC.
for the
U.S. DEPARTMENT OF ENERGY
under Contract No. DE-AC05-84OR21400

MARTIN MARIETTA ENERGY SYSTEMS LIBRARIES
3 4456 0279128 1

Contents

	Page
PREFACE	v
ABSTRACT	vii
PART I - HFIR VESSEL MATERIALS SURVEILLANCE PROGRAM	1
1. INTRODUCTION	1
2. ORIGINAL RADIATION-DAMAGE SURVEILLANCE PROGRAM	6
3. EXTENDED RADIATION-DAMAGE SURVEILLANCE PROGRAM	9
4. CORROSION SURVEILLANCE	19
REFERENCES	20
PART II - HFIR VESSEL HYDROSTATIC PROOF TEST	21
1. INTRODUCTION AND SUMMARY	21
2. PURPOSE OF HYDRO TEST	22
3. CALCULATION OF HYDRO-TEST PRESSURE	24
4. DETECTION OF FLAW PROPAGATION	28
4.1 General Approach	28
4.2 Application of AE Instrumentation	29
4.3 Application of TV/Audio Equipment	32
5. CRITERIA RELATED TO VESSEL FAILURE	33
6. PROCEDURE	34
REFERENCES	35
APPENDIX A	37
APPENDIX B	49

PREFACE

This report is divided into two independent parts. Part I describes the surveillance program for the pressure vessel structural materials, while Part II describes the hydrostatic proof test, which will be conducted periodically to demonstrate the integrity of the vessel. Additional information regarding the original surveillance program and hydrostatic proof testing is included in Refs. 1, 2, and 3 in Part I and Refs. 1 and 2 in Part II.

The surveillance programs discussed herein shall be administered as a part of the overall HFIR surveillance program as set forth in Appendix G of the HFIR Quality Assurance Assessment/Plan (RRD-QAA-87-05).

ABSTRACT

Extending the life of the HFIR vessel by the proposed 10 effective full-power years is contingent upon a continuation of the materials surveillance program and the application of hydrostatic proof testing. As a part of the surveillance program, Charpy V-notch (CVN) specimens of shell, weld and nozzle materials are installed adjacent to the inner surface of the vessel and are removed periodically for testing to determine the radiation-induced increase in the nil-ductility transition temperature. Hydro testing is conducted to prove that a critical combination of flaw size, stress and fracture toughness does not exist. Information from the materials surveillance program is used in a fracture mechanics analysis to confirm that the hydro-test pressure being applied is appropriate for the desired life extension of the vessel. This report specifies (1) the number, type, location and schedule for removal/testing of the CVN specimens for the continuing materials surveillance program, and (2) the procedures and test conditions for the hydro test.

PART I. HFIR VESSEL MATERIALS SURVEILLANCE PROGRAM

1. INTRODUCTION

The design of the High Flux Isotope Reactor (HFIR) included consideration of neutron radiation embrittlement of the pressure vessel. The intent was to surround the reactor core and the beryllium reflector with sufficient water to permit the use of carbon steel in the vessel fabrication. The beam tubes were of special concern since they displaced beryllium and water and thus resulted in higher levels of neutron irradiation in areas of the vessel wall close to the beam-tube ports. This concern led to the use of especially tough material for the vessel beam-tube nozzles.

The criterion established in 1965 for safe operation of the vessel was that the vessel not be pressurized unless the temperature of the vessel is 60°F greater than the nil ductility temperature (NDT).[1] Since NDT increases with fast-neutron exposure, a vessel surveillance program was initiated in 1965, before the reactor was placed in operation, to determine the actual rate of increase.[1] Samples of material used in the pressure vessel fabrication were made into Charpy V-notch (CVN) specimens and were mounted in the vessel at positions of representative neutron flux. A review of pressure vessel integrity was recommended if testing of the specimens, which were to be removed periodically, indicated that NDT +60°F for any part of the vessel exceeded the minimum permissible "operating" temperature, which was specified as 70°F (Ref. 1).

The HFIR commenced full-power operation in 1966, and surveillance specimens for the vessel were removed for testing in 1969 (2.3 EFPY),* 1974 (6.4 EFPY), 1983 (15.0 EFPY), and 1986 (17.5 EFPY). Results of these tests indicated that in 1983 NDT + 60°F for a portion of the shell and for one nozzle exceeded the minimum permissible temperature for

---

*Effective full-power years (EFPY) based on full power = 100 MW.

pressurization (70°F) by 45°F and 15°F, respectively.[2] The results for 1983 were not available until November 1986, and reactor operation was continued until that time. The 1986 surveillance data were obtained during the latter part of 1986, and they indicated that NDT + 60°F for the shell exceeded the normal operating temperature of 120°F by 15°F (Ref. 3). (The shell material had the highest value of all the surveillance materials.)

Because the specific NDT criterion applied to the HFIR vessel appeared to be unnecessarily conservative, and since it is important to ORNL and other users of the HFIR experimental facilities that the reactor be operational for at least ten more years, a reevaluation of vessel integrity was conducted using more sophisticated methods of analysis.[4] This did not, however, alleviate the necessity for a continuing surveillance program, because knowledge of the increase in NDT is still required, although it is applied in a different manner.

As indicated in Figs. 1.1 and 1.2, the cylindrical portion of the HFIR vessel was fabricated by rolling a single plate; thus, this portion of the vessel contains a single seam weld and is joined to adjacent portions by circumferential welds. The plate is ASTM A212 Grade B steel, and the seam and circumferential welds were made using the submerged-arc process. The beam-tube nozzles, which were welded in place using coated rods, are forgings, two of them conforming to A105 Grade II and the other two to A350 Grade LF3.

The original surveillance program included plate material for one orientation relative to the rolling direction and also both nozzle materials, but it did not include weld material. To obtain data for the nozzle and plate welds and for different orientations in the plate, an accelerated irradiations program was conducted recently in the Oak Ridge Research Reactor (ORR).[4]

The availability of archival material for irradiations in the ORR was severely limited, and documentation regarding materials, heat treatments, and fabrication procedures was incomplete. Because of these deficiencies, the materials evaluation project involved detailed metallurgical examination of surveillance specimens, qualification weldments, and other materials identified as candidates for the irradiation task.

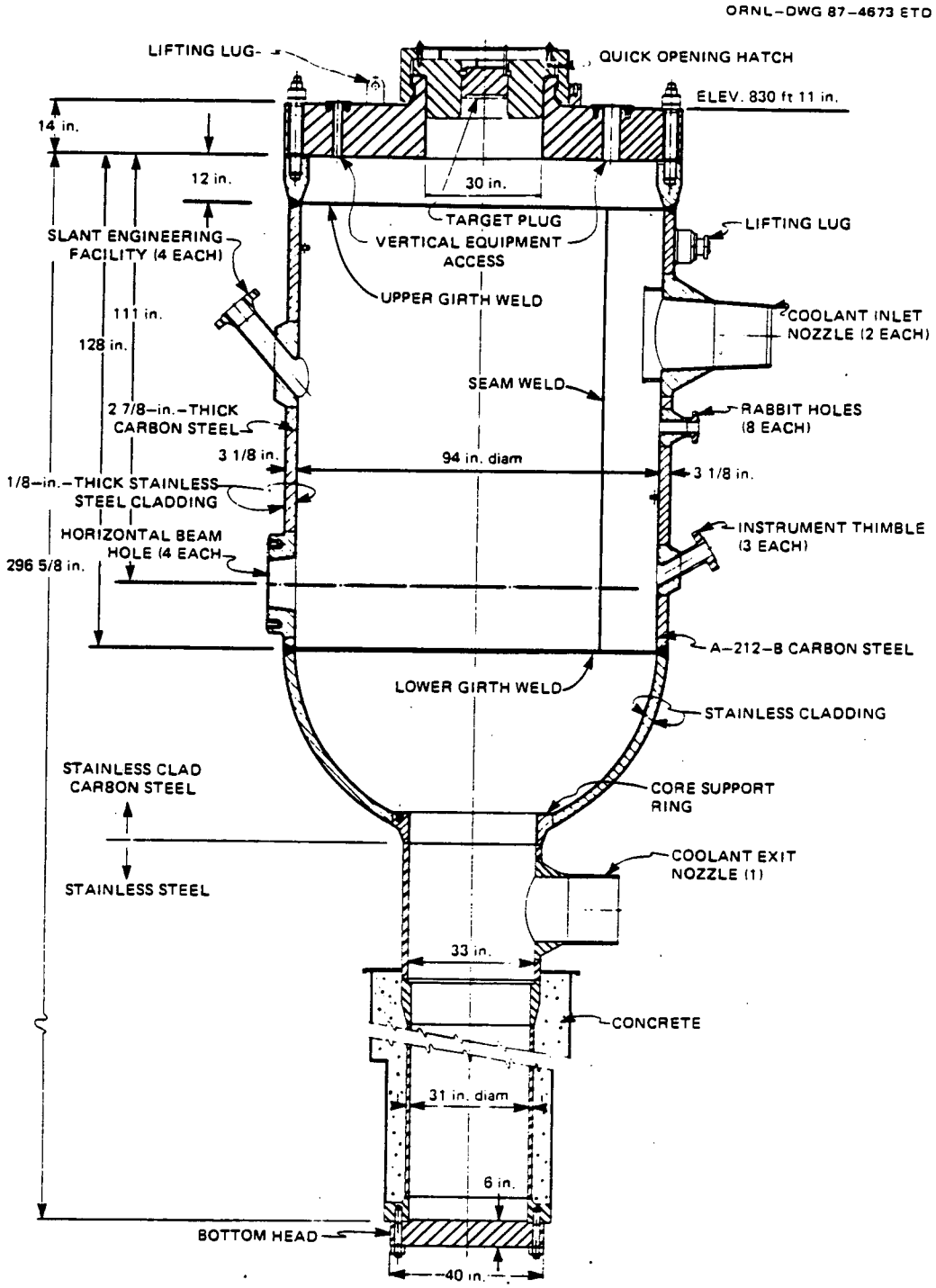

Fig. 1.1 Vertical cross section of HFIR pressure vessel showing location of vessel seam, girth, and nozzle welds.

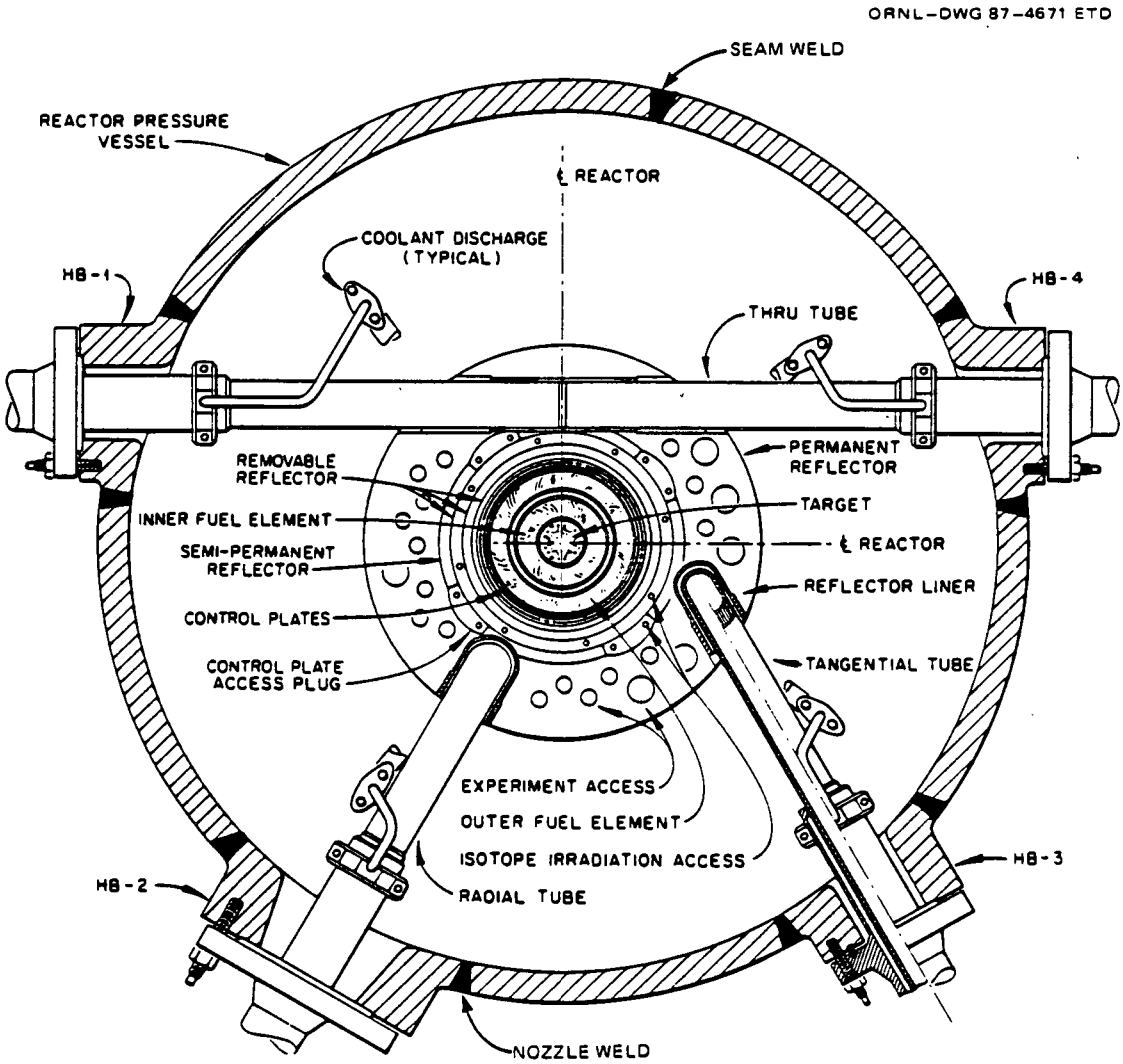

Fig. 1.2. Cross section of HFIR core and pressure vessel at core horizontal midplane showing location of vessel seam and beam-tube nozzle welds.

It also included the fabrication of a submerged-arc weldment to represent the longitudinal seam and circumferential girth welds of the pressure vessel. Additional studies included various microstructural examinations to reveal embrittlement mechanisms and microstructural characteristics relevant to a full understanding of the materials response to irradiation. Details of these studies are included in Appendix A of Ref. 4.

A comparison of the HFIR, ORR and other relevant materials-tests-reactor data indicated that the damage rate (ΔNDT per unit of fluence) in the HFIR vessel was greater than expected, and this was tentatively attributed to the relatively low value of the fast flux in the HFIR vessel compared to materials testing reactors (factor of $\sim 10^{-4}$), that is, to a fluence-rate effect. This introduced additional uncertainties regarding predicted damage rates, particularly for the HFIR weld specimens irradiated only in the ORR. Thus, extending the life of the HFIR vessel requires a continuation of the vessel-material surveillance program, and this program must include all vessel materials of interest. Section 3 (Part I) of this report describes the program that is to be implemented.

2. ORIGINAL RADIATION-DAMAGE SURVEILLANCE PROGRAM

The original surveillance program included surveillance specimens at seven different locations adjacent to the inner surface of the vessel wall, as indicated in Figs. 2.1 and 2.2 (Keys 1-7). Each general location (Key) accommodates a specific number of capsules (Fig. 2.2), and each capsule contains three CVN specimens and a flux monitor. Table 2.1 indicates the positions used and the capsules that have been removed for

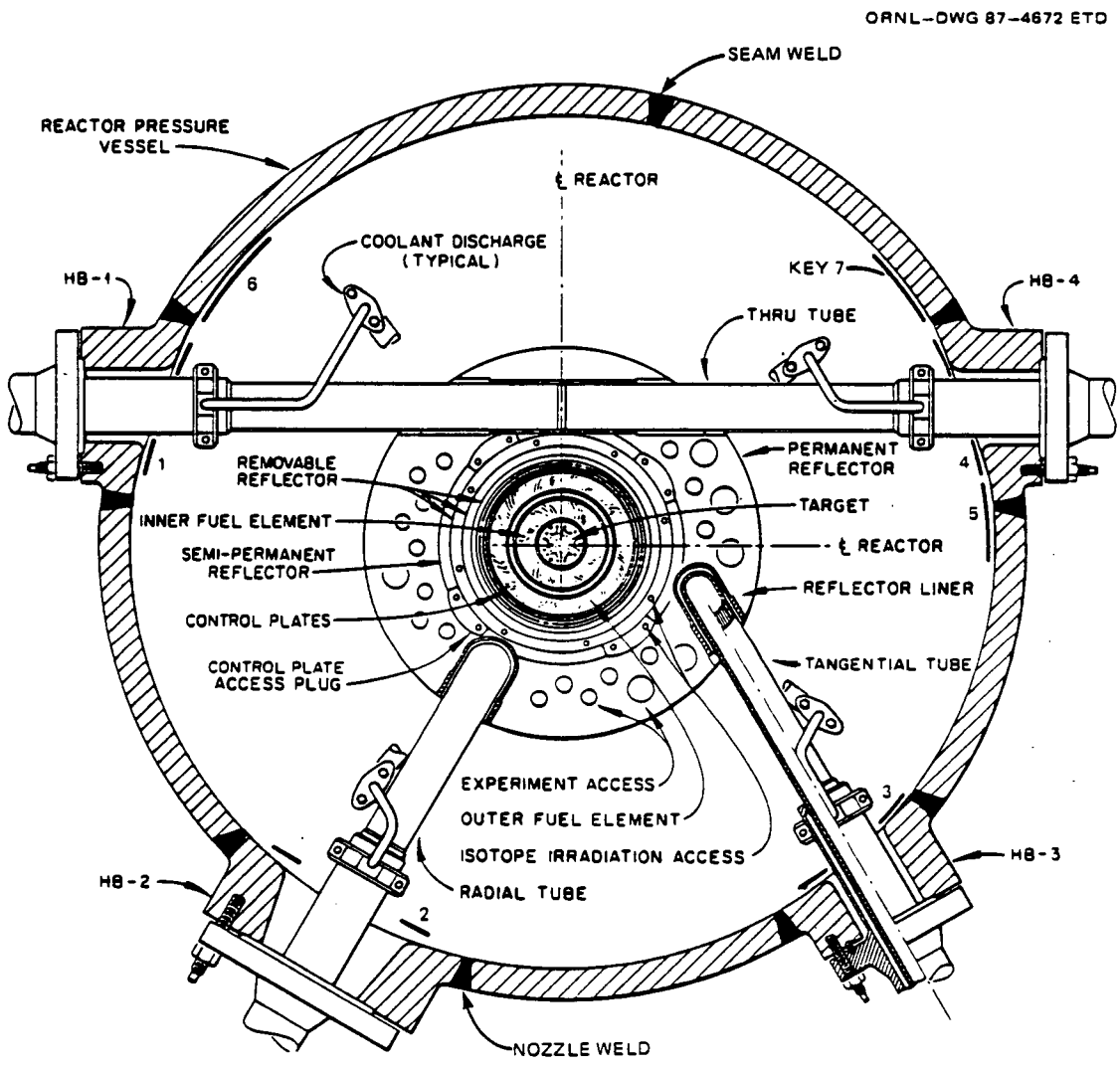

Fig. 2.1. Cross section of HFIR core and pressure vessel at core horizontal midplane showing location of surveillance specimens (Keys 1-7).

ORNL–DWG 87–4701 ETD

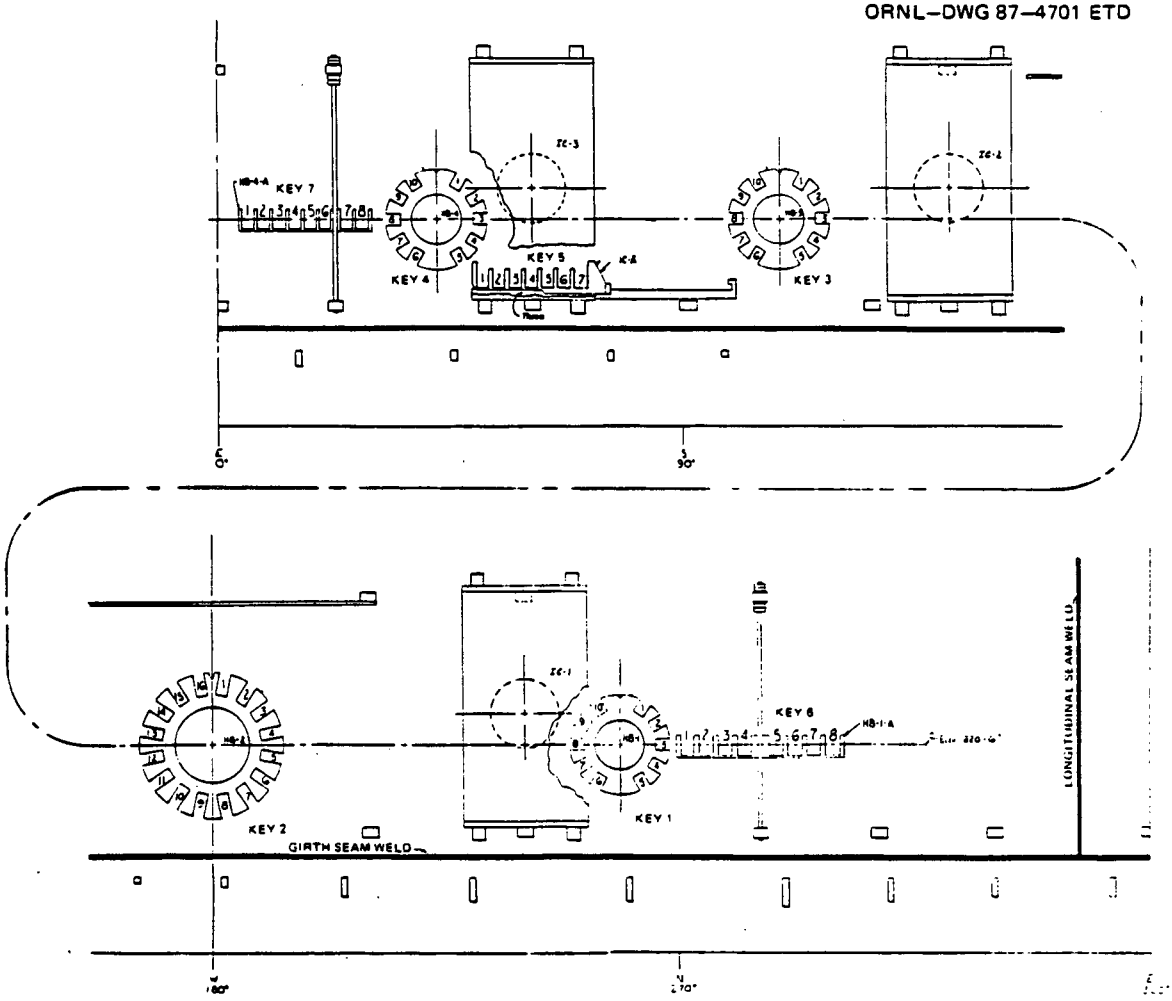

Fig. 2.2. Developed view of vessel inner surface showing location of surveillance-specimen capsules.

Table 2.1. Information pertaining to capsules used in HFIR original surveillance program

Key	Positions	Original vacant positions (position number)	Capsules removed as of 10/1/87 (position number)
1	10	None	1,2,3,4,6,9
2	16	3,6,9,12,15,16	1,2,4,5,7,13,14
3	10	None	1,2,3,4,5,6,8,9
4	10	None	1,2,3,4,6,8,9
5	7	None	1
6	8	None	1,2,3
7	8	None	6,7,8

testing. Keys 1 and 4 were used for A105 material, Keys 2 and 3 for A350, and Keys 5, 6, and 7 for A212.

As described in Ref. 1, the testing philosophy was to test three CVN impact specimens at selected temperatures to bracket the NDT, followed by three tests at the estimated NDT temperature. The NDT temperatures are indexed at CVN energies of 15 ft-lb for A105 grade II and A212 grade B, and 30 ft-lb for A350 grade LF3.

Tables A1 through A4 of Ref. 4 contain all the test results obtained in the surveillance program. The unirradiated tests were conducted in 1965 except for additional tests at 60, 90 and 120°F, which were conducted as part of the recent assessment.[4]

3. EXTENDED RADIATION-DAMAGE SURVEILLANCE PROGRAM

The original material surveillance program for the HFIR pressure vessel was intended to cover 20 years of operation at 100 MW. To effectively continue the surveillance program for the proposed extended life of 10 EFPY (full power = 85 MW), additional surveillance materials must be included. Materials to be added fall into the following three categories: nozzle weld material, seam weld material, and shell material.

Since the pressure vessel components and remaining surveillance specimens have already accumulated 17.5 EFPY of irradiation exposure, it is intended that irradiation of new specimens in the extended surveillance plan be accelerated somewhat. For instance, weld specimens will be placed in surveillance locations that provide fluxes up to five times greater than for the actual welds in the vessel. (The rate effect[4] associated with this difference in flux level is expected to be very small.) Examination of Fig. A6 in Ref. 4 shows that an exposure equivalent to about 2 or 3 EFPY gives ΔNDT results which fall in the linear range of ΔNDT vs EFPY. Thus, weld metal specimens placed in surveillance locations with a neutron flux of, say, three times the flux at the actual vessel weld, would show an NDT shift equivalent to about 6 EFPY after only 2 EFPY of exposure. In this way, the surveillance program for the new materials can "catch up" with the program for the base metals over the projected life extension period of 10 EFPY.

The source of material for the new specimens was somewhat diversified. Nozzle weld material for the extended surveillance program was obtained from excess material available from a nozzle qualification weld used in the original qualification of welders and procedures for the nozzle welds.[4] This nozzle weld material will be fabricated into 24 surveillance specimens with dimensions as specified in the original surveillance program.[1]

Since no original seam weld material was available for fabrication into surveillance specimens, an extensive effort was undertaken to characterize the seam weld material in the reactor pressure vessel and then to duplicate the weld. The chemical composition was obtained by removing two samples of seam weld material from the reactor pressure vessel

(Fig. 3.1). The chemical analysis of this material was performed in accordance with NBS standards, and the results are reported in Table 3.1. Based on this detailed analysis of the original seam weld material and available weld qualification documents, the original seam weld material was adequately duplicated. The chemical analysis of the duplicated weld material is listed in Table 3.1.[4]

Original shell surveillance specimens that were not used in the initial program nor in the ORR irradiation evaluation will be used for the extended surveillance program. Additional shell specimens will be machined from the nozzle drop-out used for the original program.

A summary of the new materials, their source and the number of specimens for each is provided in Table 3.2. The notations (LT) and (LS) indicate orientations of the CVN specimens relative to the rolling direction of the plate (shell) and are explained in Ref. 4.

ORNL-DWG 87-4702 ETD

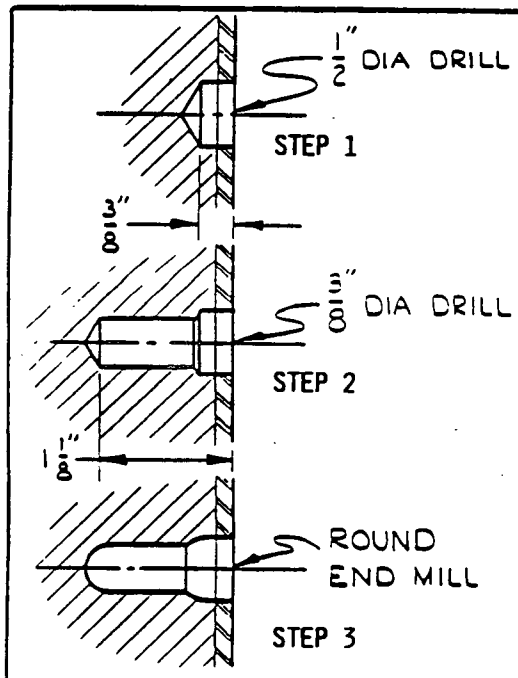

SPECIMEN HOLE NO.	AZIMUTHAL LOCATION	ELEVATION
1	30°	820'-6"
2	96°	820'-6"
3	163°	820'-6"
4	270°	820'-6"
■ 5	343°	828'-9"
6	343°	820'-6"
■ 7	346°-30'	828'-9"
8	346°-30'	820'-6"
9	346°-30'	819'-1"

■: DENOTES ACTUAL SPECIMEN HOLES DRILLED

270° = NORTH

Fig. 3.1. Location and configuration of HFIR vessel weld-sample holes.

Specimen and capsule identification nomenclature for the additional surveillance material will follow essentially the format established in the original surveillance program.[1] The five differences in the revised labeling procedure are:

1. The abbreviation NW is introduced to represent nozzle weld material.
2. The abbreviation SW is introduced to represent seam weld material.
3. The abbreviation LT is introduced to represent new shell material with the LT orientation, the same orientation used in the original program.
4. The abbreviation LS is introduced to represent new shell material with the LS orientation. (Reference 4 contains a detailed discussion of orientation effects.)
5. Frame numbers or capsule numbers will be specified as 87-1, 87-2, etc., in order to simplify the inventory and record-handling process.

Seam weld specimens, dosimeters (flux wires) and capsules that will be added to the extended surveillance program will be labeled as specified in Table 3.3. New shell specimens, dosimeters, and capsules will be labeled as indicated in Table 3.4, and new nozzle-weld specimens, dosimeters and capsules that will be added to the extended surveillance program will be labeled as specified in Table 3.5.

Table 3.3. New seam weld surveillance specimens

Capsule ID	Specimen number			Dosimeter strip number
SW-7-1	SW-1	SW-2	SW-3	1
SW-7-2	SW-4	SW-5	SW-6	1
SW-7-3	SW-7	SW-8	SW-9	1
SW-6-4	SW-10	SW-11	SW-12	1
SW-6-5	SW-13	SW-14	SW-15	1
SW-6-6	SW-16	SW-17	SW-18	1
SW-1-7	SW-19	SW-20	SW-21	1
SW-1-8	SW-22	SW-23	SW-24	1
SW-1-9	SW-25	SW-26	SW-27	1
SW-4-10	SW-28	SW-29	SW-30	1
SW-4-11	SW-31	SW-32	SW-33	1
SW-4-12	SW-34	SW-35	SW-36	1

Table 3.1. Weld metal chemical compositions (wt%)

Element	HFIR seam weld drillings		Seam weld reproduction	Nozzle qualification weld
	#5	#7		
C	0.080	0.075	0.058	0.045
Al	0.02	0.03	0.006	0.007
Co	0.01	0.01	0.007	0.02
Cr	0.05	0.05	0.04	0.04
Cu	0.16	0.17	0.18	0.05
Mn	1.5	1.5	1.5	0.92
Mo	0.58	0.56	0.48	0.52
Nb	<0.001	<0.001	0.002	0.01
Ni	0.06	0.05	0.01	0.10
Si	0.54	0.51	0.54	0.55
Sn	0.01	0.008	0.003	0.01
Ti	0.001	0.002	0.001	0.02
V	0.002	0.002	0.004	0.005
W	<0.005	<0.005	<0.001	<0.005
Zr	<0.001	<0.001	<0.001	<0.002
P	0.008	0.014	0.015	0.008
S	0.02	0.04	0.02	0.04
As	0.007	0.009	0.004	0.005
B	<0.0005	<0.0005	<0.001	<0.0005
N	0.0069	0.0067	0.0070	0.0105
O	789 ppm[a]	730 ppm[a]	0.0074	0.0320

[a]These numbers are believed to be high because oxygen was introduced into the samples during the cutting operation.

Table 3.2. Additional surveillance material

Material	Source	Number of specimens	Number of capsules
Nozzle weld	Original fabrication	24	8
Seam weld	Duplicated material	36	12
Shell	Original fabrication (LT)	12	4
	New fabrication (LS)[a]	18	6

[a]Recently machined from shell nozzle drop-out.

Table 3.4. New shell surveillance specimens

Capsule ID	Specimen number			Dosimeter strip number
LT-2-1	A-3	A-74	A-69	11
LT-2-2	A-6	A-66	A-73	11
LT-2-3	A-44	A-60	A-65	11
LT-2-4	A-129	A-138	A-153	11
LS-1-1	LS-1	LS-2	LS-3	11
LS-1-2	LS-4	LS-5	LS-6	11
LS-1-3	LS-7	LS-8	LS-9	11
LS-4-4	LS-10	LS-11	LS-12	11
LS-4-5	LS-13	LS-14	LS-15	11
LS-4-6	LS-16	LS-17	LS-18	11

Table 3.5. New nozzle weld surveillance specimens

Capsule ID	Specimen number			Dosimeter strip number
NW-2-1	NW-1	NW-2	NW-3	111
NW-2-2	NW-4	NW-5	NW-6	111
NW-2-3	NW-7	NW-8	NW-9	111
NW-2-4	NW-10	NW-11	NW-12	111
NW-2-5	NW-13	NW-14	NW-15	111
NW-2-6	NW-16	NW-17	NW-18	111
NW-2-7	NW-19	NW-20	NW-21	111
NW-2-8	NW-22	NW-23	NW-24	111

Dosimeters will be fabricated from 304 stainless steel strips in accordance with applicable drawings listed in the original surveillance program.[1]

The number of capsule positions available for new specimens is indicated in Table 3.6. Because most of the original surveillance capsules removed for testing were taken from the higher flux positions, some of the remaining original capsules can be moved to positions of

Table 3.6. Information pertaining to capsules used in HFIR original surveillance program

Key	Positions	Original vacant positions (position number)	Capsules removed as of 10/1/87 (position number)
1	10	None	1,2,3,4,6,9
2	16	3,6,9,12,15,16	1,2,4,5,7,13,14
3	10	None	1,2,3,4,5,6,8,9
4	10	None	1,2,3,4,6,8,9
5	7	None	1
6	8	None	1,2,3
7	8	None	6,7,8

higher flux. This strategy will be used so that somewhat higher long-term exposures can be achieved. When these capsules are removed for specimen testing, correlation of the data with fluence will account for the different exposure conditions. Capsules will be moved within Keys 1, 4, 6 and 7, as indicated in Table 3.7.

Table 3.7. Position changes for original surveillance capsules within a given key

Key	Capsule ID	Original position No.	New position No.
1	HB-1-23	7	4
1	HB-1-22	8	3
1	HB-1-29	10	2
4	HB-4-35	5	8
4	HB-4-39	10	9
6	HB-1A-70	4	1
6	HB-1A-62	5	2
6	HB-1A-65	6	3
6	HB-1A-64	7	4
6	HB-1A-71	8	5
7	HB-4A-76	1	4
7	HB-4A-79	2	5
7	HB-4A-74	3	6
7	HB-4A-80	4	7
7	HB-4A-75	5	8

New specimens will be placed in Keys 1, 2, 4, 6, and 7, as indicated in Tables 3.8, 3.9 and 3.10. Nozzle-weld specimens identified in Table 3.5 will be included in Key 2 (Table 3.8). As mentioned earlier, the fluxes associated with Key 2 are 2 to 5 times greater than those in the critical nozzle weld (HB-3). Thus, a reasonable acceleration in irradiation of nozzle weld material can be achieved. (The variation in flux around the HB-3 nozzle weld is discussed in Ref. 4. There is essentially no variation around Key 2.)

Table 3.8. New nozzle weld material surveillance locations in the pressure vessel

Capsule ID	Location
NW-2-1	Key 2-Position 2
NW-2-2	Key 2-Position 3
NW-2-3	Key 2-Position 5
NW-2-4	Key 2-Position 6
NW-2-5	Key 2-Position 7
NW-2-6	Key 2-Position 12
NW-2-7	Key 2-Position 15
NW-2-8	Key 2-Position 16

Table 3.9. New seam weld material surveillance locations in the pressure vessel

Capsule ID	Location
SW-7-1	Key 7-Position 1
SW-7-2	Key 7-Position 2
SW-7-3	Key 7-Position 3
SW-6-4	Key 6-Position 6
SW-6-5	Key 6-Position 7
SW-6-6	Key 6-Position 8
SW-1-7	Key 1-Position 7
SW-1-8	Key 1-Position 8
SW-1-9	Key 1-Position 9
SW-4-10	Key 4-Position 2
SW-4-11	Key 4-Position 3
SW-4-12	Key 4-Position 4

Table 3.10. New shell material surveillance locations

Capsule ID	Location
LT-2-1	Key 2-Position 1
LT-2-2	Key 2-Position 4
LT-2-3	Key 2-Position 13
LT-2-4	Key 2-Position 14
LS-1-1	Key 1-Position 1
LS-1-2	Key 1-Position 6
LS-1-3	Key 1-Position 10
LS-4-4	Key 4-Position 1
LS-4-5	Key 4-Position 5
LS-4-6	Key 4-Position 6

Seam-weld specimens (Table 3.3) will be included in Keys 1, 4, 6 and 7, as indicated in Table 3.9. The fluxes in these positions range from 3 (Keys 6 and 7) to 5 (Keys 1 and 4) times those at the actual seam weld, providing the desired acceleration in irradiation.

The new shell specimens (Table 3.4) will be included in Keys 1, 2 and 4, as indicated in Table 3.10. The fluxes for these positions are about 1 (Keys 1 and 4) to 2 (Key 2) times those for the actual vessel shell material in the highest flux location (adjacent to HB-3 weld at reactor beltline[4]). The fluxes at these locations are, of course, higher than at Keys 6 and 7; therefore, these specimens will accumulate damage faster than the original surveillance specimens located at Keys 6 and 7 by factors ranging from 2 to 4. Additionally, the shell specimens located at Key 2 will provide for a direct comparison with the nozzle weld material, and this will allow for a direct comparison of both materials' response to irradiation under high flux (ORR)[4] and low flux (HFIR) conditions.

To effectively implement the surveillance program, a schedule for removing material for analysis is listed in Table 3.11. Five of the available capsules in the vessel are not included in this table and are not presently scheduled for removal. These capsules, listed in Table 3.12, are intended as supplements, as required.

Table 3.11. Schedule for surveillance material removal

Effective full power years since re-start at 85 MW[a]	Cumulative operating time MWd's[a]	New surveillance material			Original surveillance material		
		Capsule	Key	Key position	Capsule	Key	Key position
2 EFPY	701,984	SW-1-7	1	7	HB-1A-64	6	4
		SW-1-8	1	8	HB-1A-71	6	5
		SW-1-9	1	9	HB-4A-76	7	4
		NW-2-1	2	2			
		NW-2-4	2	6			
		NW-2-8	2	16			
5 EFPY	795,059	SW-7-1	7	1	HB-1A-70	6	1
		SW-7-2	7	2	HB-4A-80	7	7
		SW-7-3	7	3	HB-4A-75	7	8
		NW-2-2	2	3	IC-A-54	5	2
		NW-2-5	2	7	IC-A-55	5	3
		NW-2-7	2	15	IC-A-56	5	4
		LS-1-1	1	1	HB-1-22	1	3
		LS-1-2	1	6	HB-1-23	1	4
		LS-1-3	1	10	HB-4-38	4	7
		LT-2-1	2	1	HB-2-18	2	8
		LT-2-2	2	4	HB-3-46	3	7
					HB-3-41	3	10
10 EFPY	950,184	SW-6-4	6	6	HB-1A-62	6	2
		SW-6-5	6	7	HB-1A-65	6	3
		SW-6-6	6	8	HB-4A-74	7	6
		NW-2-3	2	5	IC-A-57	5	5
		NW-2-6	2	12	IC-A-58	5	6
		LS-4-4	4	1	IC-A-60	5	7
		LS-4-5	4	5	HB-1-29	1	2
		LS-4-6	4	6	HB-4-35	4	8
		LT-2-3	2	13	HB-4-39	4	9
		LT-2-4	2	14	HB-2-17	2	10
					HB-2-8	2	11

[a]The extended surveillance program was implemented at 639,934 MWd's, which corresponded to the reactor shutdown in November of 1986 for pressure vessel review. Previous full power was 100 MW and re-operation is to be implemented at 85 MW (full power).

Table 3.12. Supplemental capsules
(not yet scheduled for removal)

Capsule ID	Key	Position
SW-4-10	4	2
SW-4-11	4	3
SW-4-12	4	4
HB-4A-79	7	5
HB-1-24	1	5

Testing of the specimens should be carried out as follows:

When only two capsules (six specimens) of a given material are removed, testing should be performed as described in Ref. 1. When three capsules are removed, three specimens should be used to bracket the NDT by plotting Charpy ener[illegible] vs test temperature, and from this plot an estimate of NDT should be [illegible] The remaining six specimens should be tested at appropriate temperatures for obtaining a more accurate value of NDT, recognizing that the variability of CVN data for the materials involved is fairly large. Appendix A of Ref. 4 discusses analysis of the CVN data and the determination of the related reference temperature (RT_{NDT}) that is used in the updated HFIR vessel analysis.

Within 90 days of each time that specimens are removed from the vessel for testing, a report covering the evaluation of the data shall be submitted to the HFIR supervisor.

4. CORROSION SURVEILLANCE

As mentioned in Sect. 3, two holes were drilled into the outer surface of the pressure vessel to obtain samples of weld material. The corrosion rate of the exposed weld material is expected to be negligible, but nonetheless, must be monitored. To facilitate a thorough and practical monitoring program for the specific area of the vessel, which is difficult to access, a corrosion specimen simulating the actual condition was fabricated (Fig. 4.1). The specimen was made with weld and cladding materials similar to those in the vessel and will be placed in the reactor pool adjacent to the vessel wall where the samples of material were removed. The specimen will be removed annually and inspected for corrosion. If excessive corrosion is noted, the drilled holes in the pressure vessel will be monitored, and an evaluation will be conducted.

ORNL PHOTO 6563-87

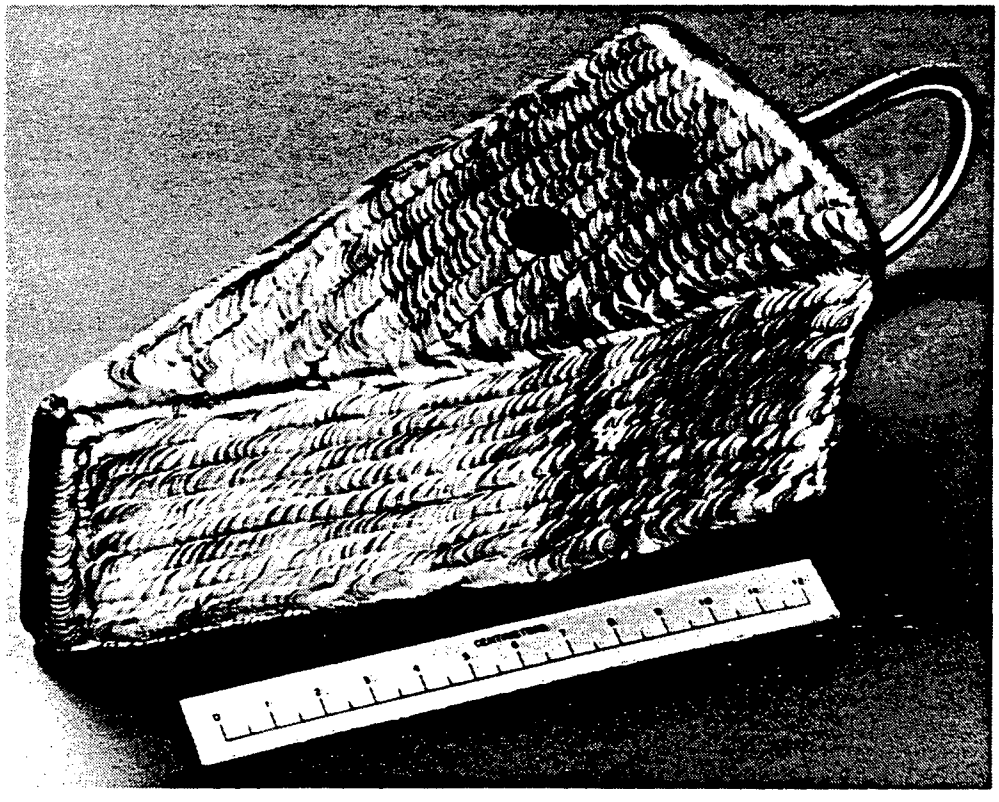

Fig. 4.1. Corrosion sample simulating conditions for weld-sample holes in HFIR vessel.

REFERENCES

1. J. R. McWherter, R. E. Schappel and J. R. McGuffey, *HFIR Pressure Vessel and Structural Components Material Surveillance Program*, ORNL/TM-1372, Oak Ridge Natl. Lab., Oak Ridge, Tenn., January 1966.

2. R. K. Nanstad, HFIR Surveillance Test Results, letter to G. R. Hicks (ORNL), November 5, 1986.

3. R. K. Nanstad, 1986 HFIR Surveillance Test Results, letter to G. R. Hicks (ORNL), November 1986.

4. R. D. Cheverton, J. G. Merkle, and R. K. Nanstad, *Evaluation of HFIR Pressure-Vessel Integrity Considering Radiation Embrittlement*, ORNL/TM-10444, (advance copy, September 18, 1987).

PART II: HFIR VESSEL HYDROSTATIC PROOF TEST

1. INTRODUCTION AND SUMMARY

Radiation embrittlement of the HFIR vessel has increased the chances of a sharp crack-like defect (flaw) propagating through the vessel wall.[1] The tendency for a flaw to propagate is evaluated using linear elastic fracture mechanics (LEFM), for which the governing parameters are the size and orientation of the flaw, the stress level, and the fracture toughness of the material. The uncertainties associated with flaws and fracture toughness are large and are accommodated in the portion of the **ASME Code** pertaining to PWR pressure vessels by the application of large safety factors. Evaluation of the HFIR vessel in accordance with criteria adapted from the Code results in noncompliance for some operating conditions. Some noncompliance is considered to be acceptable because the calculated probability of failure of the vessel is very small,[1] and because the consequences of failure are much less than for a PWR. However, establishing an acceptable degree of noncompliance is difficult. An alternative is to perform a hydrostatic proof test on the vessel, and this approach is being taken.

A hydro test was conducted on the HFIR vessel on August 4, 1987, and the results and other information pertaining to the test are discussed in Refs. 1, 2, and 3. Information provided in the following pages was prepared for the August 4, 1987, test and is also appropriate for subsequent tests.

2. PURPOSE OF HYDRO TEST

A hydrostatic proof test removes, to a large extent, the uncertainties in the LEFM analysis. If the vessel does not fail during the hydro test, the test proves that a critical combination of the three fracture-mechanics parameters mentioned above does not exist.

The difference in hydro-test pressure and operating pressure represents a permissible life extension for the vessel since the test pressure is greater than the operating pressure, and the continuing radiation embrittlement results in a continuously decreasing critical pressure. Calculation of the required hydro-test pressure for a specified life extension involves the uncertainty in the rate of embrittlement. However, the penalty for applying a reasonable uncertainty factor in the analysis is not severe; it is simply a modest increase in the required hydro-test pressure.

The rate at which flaws can grow in depth as a result of cyclic loading and corrosion was also considered in establishing the required hydro-test pressure. The number of pressure cycles during the next 10 EFPY is much too small for significant fatigue-type flaw extension, and HFIR surveillance data indicate that corrosion is not a problem.

Another consideration in establishing the permissible life extension of the vessel is the fraction of the vessel that would become sufficiently brittle to fragment in the event of a failure. If it were not for this consideration, the vessel might be operated until failure occurred during a periodic hydro test. As discussed in Ref. 1, for the desired life extension of 10 EFPY, the fraction of the vessel that might fragment in the event of a failure and the required hydro-test pressure are acceptable.

In 1983 the HFIR vessel was subjected to a hydro test at a pressure of ~1100 psi and a temperature of ~85°F. Based on presently specified operating conditions,[1] this test corresponded to a nominal life extension, beyond 1983, well in excess of 10 EFPY. Applying a reasonable uncertainty factor of 1.5 to the embrittlement rate, and accounting for

the higher power level prior to November 1986, the minimum permissible life extension beyond the pending restart data is 3 EFPY for this hydro test. Even so, it was concluded that a hydro test would be conducted before restart.

3. CALCULATION OF HYDRO-TEST PRESSURE

The hydro-test pressure is calculated assuming that the vessel will be operated for some extended period without the need for additional hydro tests, unless vessel life is to be extended even further. At hydro-test conditions, if a flaw does not propagate through the wall,

$$\frac{K_I}{K_{Ic}} < 1 \ , \tag{1}$$

where K_I is the stress intensity factor for whatever flaw might exist, and K_{Ic} is the actual fracture toughness at the tip of the flaw. When $K_I > K_{Ic}$, the flaw will propagate. Thus, Eq. (1) must be satisfied at all times.

During operation of the reactor, K_{Ic} is decreased as a result of radiation damage, and K_I for a given loading condition tends to increase as a result of flaw growth due to cyclic loading and corrosion. Even so, safe operation of the vessel at the end of the specified life-extension period can be assured by hydro testing the vessel at the beginning of the period at a high enough pressure to compensate for these changes. As discussed in Ref. 1, the condition that must be satisfied is

$$\frac{K_I(HT)}{K_{Ic}(HT)} > \frac{K_I(S,\Delta t)}{K_{Ic}(\Delta t)} \ , \tag{2}$$

where

$K_I(HT)$ = K_I during hydro test,

$K_I(S,\Delta t)$ = K_I corresponding to safety-valve pressure and crack growth after specified life extension (Δt),

$K_{Ic}(HT)$ = K_{Ic} at time of hydro test,

$K_{Ic}(\Delta t)$ = K_{Ic} at end of life-extension period (Δt).

K_I is related to pressure and flaw size, and, as mentioned above, flaw size and K_{Ic} are related to time of operation. Thus, using Eq. (2), it is possible to relate the required hydro-test pressure to the desired life extension. Details of the analysis are presented in Ref. 1.

As mentioned above, corrosion data for HFIR conditions and fatigue data provided in the **ASME Code** indicate that there will be no significant flaw growth for the desired life extension of 10 EFPY. Thus, the only time-dependent parameter in Eq. (2) is K_{Ic}.

K_{Ic} is related to the increase in the nil ductility temperature (NDT), and the rate of increase in NDT was obtained from the HFIR-vessel surveillance program and related experiments in the ORR.[1] When calculating the required hydro-test pressure, an uncertainty factor of 1.5 was applied to the best estimate of the NDT rate.

As mentioned above, K_{Ic} is sensitive to temperature, and thus a temperature must be specified for the hydro test. Since K_{Ic} decreases with decreasing temperature, the minimum permissible temperature with normal operating pressure applied to the primary system was selected for the hydro test. This temperature is 85°F.

Solution of Eq. (2) for the hydro-test pressure also requires specification of the pressure corresponding to K_I $(S,\Delta t)$. This pressure must be the highest that the primary system can be subjected to for credible operating conditions. As mentioned in Ref. 1, this pressure is equal to the rupture-disc/safety-valve setting, which, with an appropriate uncertainty factor applied, is 679 psid (vessel wall pressure differential when safety valves open, p_s).

Using the above input (Δt = 10 EFPY, T_v = 85°F, p_s = 679 psid), and applying an uncertainty factor of 1.10, directly to the hydro-test pressure, for inaccuracies in the analytical model and temperature and pressure measurements during the hydro test, a hydro-test pressure of 900 psid was calculated.[1]

In accordance with the above procedure for calculating the hydro-test pressure, the required frequency of hydro testing is once in 10 EFPY, that is, prior to restart and at no other time during the following 10-EFPY period. If, however, subsequent hydro testing were conducted and each subsequent test was considered to be the last for the remainder of the 10 EFPY period, the required minimum pressure for each test would be less than for the preceding, as indicated in Fig. 3.1. The pressure corresponding to 10 EFPY in Fig. 3.1 (745 psid) is 10% greater than the rupture-disc/safety-value maximum expected relief

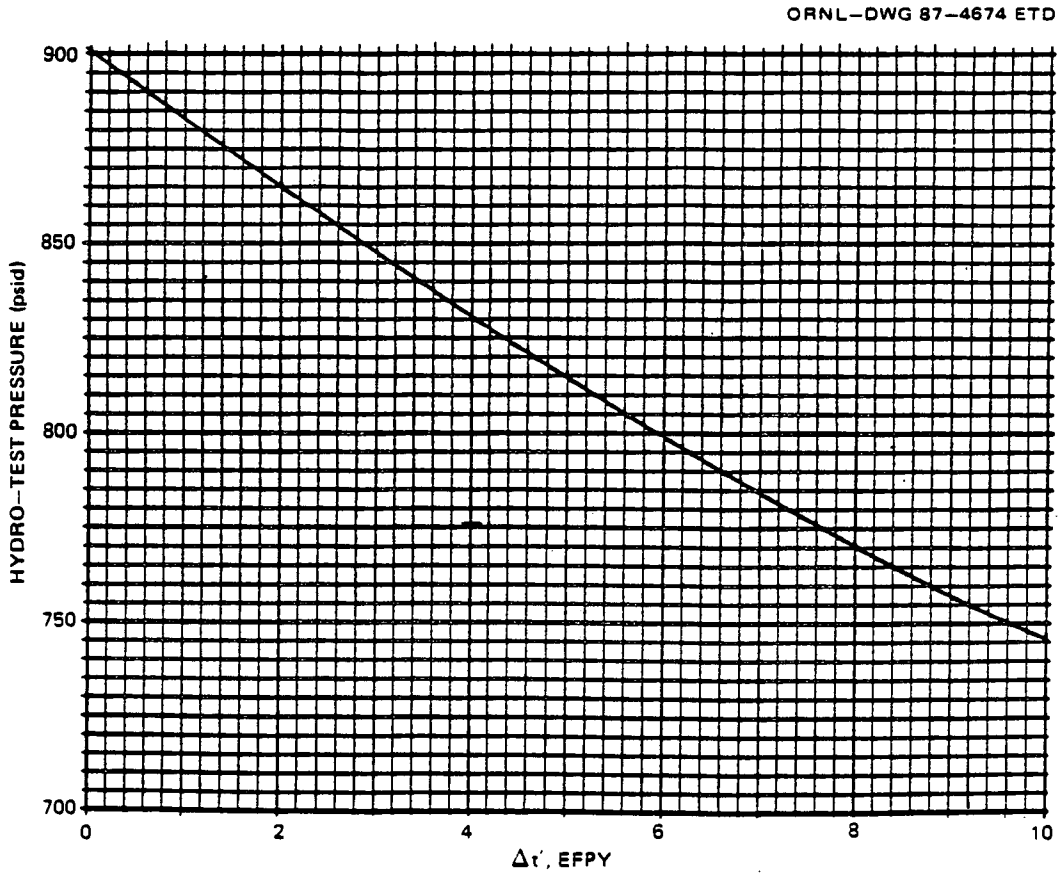

Fig. 3.1 Required hydro-test pressure based on 10-EFPY life extension, assuming that each hydro test is the last that will be performed during remainder of 10-EFPY period.

pressure (679 psid) and 63% above the nominal pressure for full-power (85 MW) operation (458 psid). The ASME Code (Sect. XI) requires an inservice hydro-test pressure 10% greater than the latter value. Thus, Fig. 3.1 is conservative relative to the Code.

The McSpadden Committee (DOE/EH/HQ) imposed a set of hydro-test criteria that requires hydro testing on an annual basis at a pressure no less than 1.25 times the nominal rupture-disc/safety-value setting.[6] The specified nominal rupture-disc pressure, which is greater than the nominal safety-valve setting, is 650 psig. Thus, the hydro-test pressure must be no less than 825 psid. This pressure is greater than that calculated by the above procedure for a 1-EFPY interval between hydro tests, and it is intended that hydro testing will be performed this

frequently in compliance with the McSpadden Committee criteria. Thus, all subsequent hydro testing within the 10-EFPY life extension period should be conducted at 825 psid and 85°F.

4. DETECTION OF FLAW PROPAGATION

4.1 General Approach

Two flaw behavior trends must be considered with regard to detection of flaw propagation during the hydro test: (1) through-wall cracking in a single event and (2) a run-arrest event that does not result in vessel failure (through-wall cracking). Such an event, referred to as a pop-in, would be associated with localized and unpredicted steep gradients in stress and/or fracture toughness. A pop-in event is of concern only to the extent that it might falsely be interpreted as vessel failure.

During the hydro test, highly reliable techniques shall be used to detect crack propagation. Past experience[4,5] has demonstrated that crack propagation in thick-walled steel cylinders submerged in liquid is audible to the unaided ear. And, of course, through-wall cracking can be detected by visually observing leakage. Both of these techniques shall be applied using TV cameras with audio. (Direct access is not possible because of an excessive dose rate at the edge of the pool, and furthermore, use of this equipment provides a means for obtaining a permanent record.)

In addition to the TV/audio, an even more sensitive technique shall be used to monitor acoustic emissions. The instrumentation, referred to as acoustic emission (AE) instrumentation, can detect acoustics associated with leakage as well as crack propagation. Specialists in the field of AE monitoring of LWR vessels and other structures should be used to assist in the HFIR hydro test.

A potential problem with AE monitoring is the detection and misinterpretation of spurious emissions. This problem is minimized by recognizing crack-propagation and leakage signatures, by filtering out the relatively low frequencies usually associated with spurious emissions, and by using several sensors appropriately located so as to be able to detect the location of the emission.

4.2 Application of AE Instrumentation

Ten AE sensors shall be used for the HFIR hydro test and shall be located on the outside of the vessel as shown in Fig. 4.1. These locations provide the greatest acoustic sensitivity around the four beam-tube nozzles and adequate sensitivity along the full length of the axial seam weld. After the sensors are installed, a pulsar transducer shall be applied to the inner surface of the vessel to provide a signal for testing/calibrating the sensors on the outside. Output from the sensors shall be fed to a multichannel recorder and stored for subsequent evaluation.

For the hydro test conducted on August 4, 1987, each sensor and a preamp were permanently attached to one end of a wire waveguide, and the other end of the waveguide was spring-loaded against the vessel at the locations shown in Fig. 4.1. The sensor end of the waveguide was secured just above the top head of the vessel, and the electrical leads extended through the pool wall into the experiment room.

The waveguides were attached to adapters that allow the waveguides to be attached to and removed from the vessel each time a hydro test is conducted (Figs. 4.2 and 4.3). Installation and removal were accomplished with the pool level at the top of the vessel. During a hydro

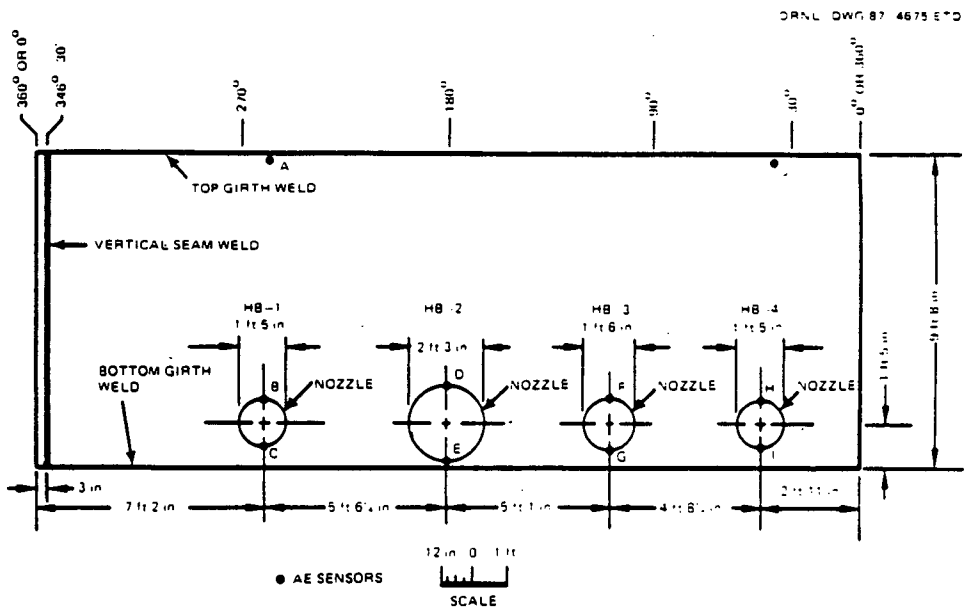

Fig. 4.1. Developed view of outer surface of cylindrical section of HFIR vessel showing location of AE sensors.

ORNL–DWG 87–4703 ETD

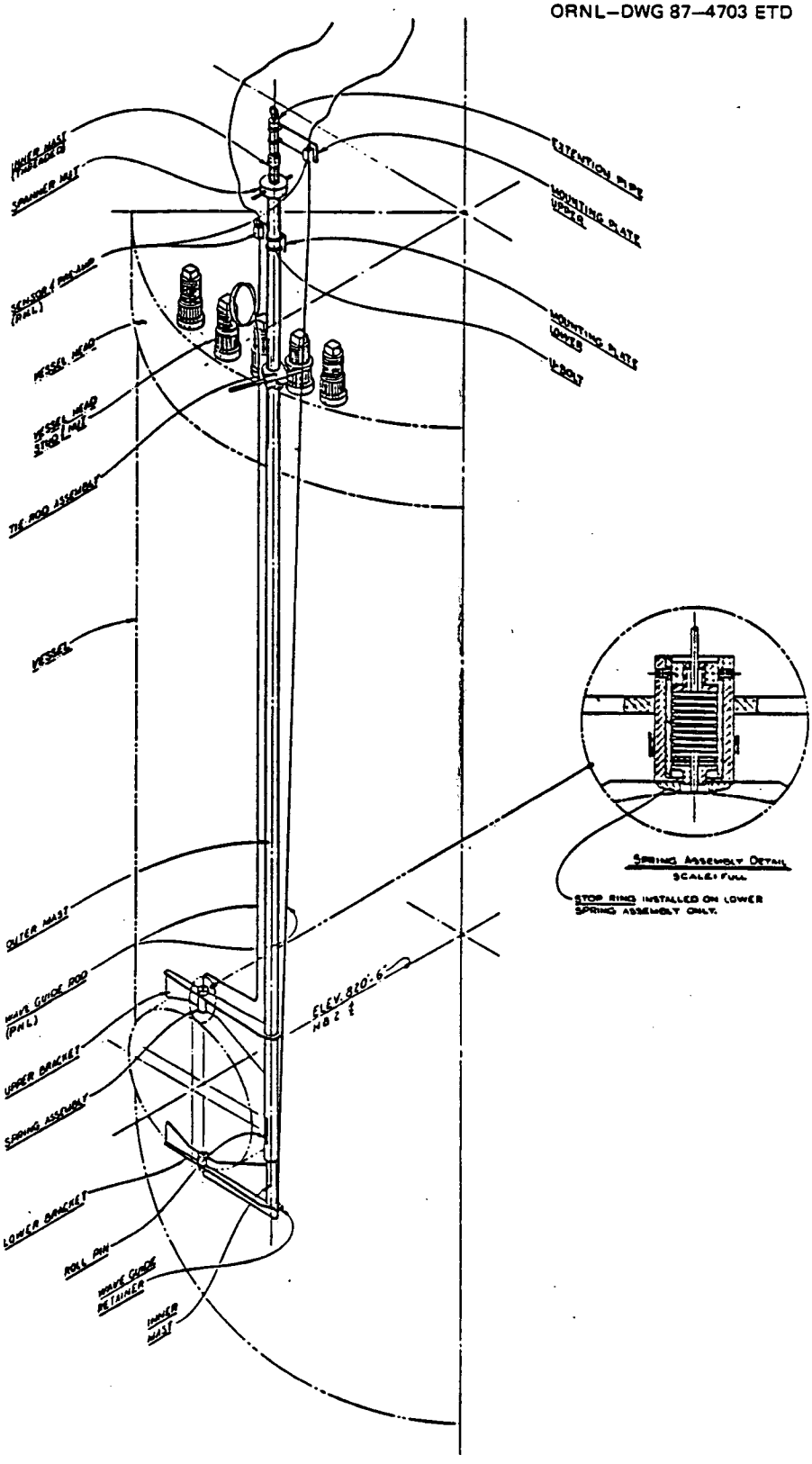

Fig. 4.2. AE wave-guide adapter for nozzles.

ORNL–DWG 87–4704 ETD

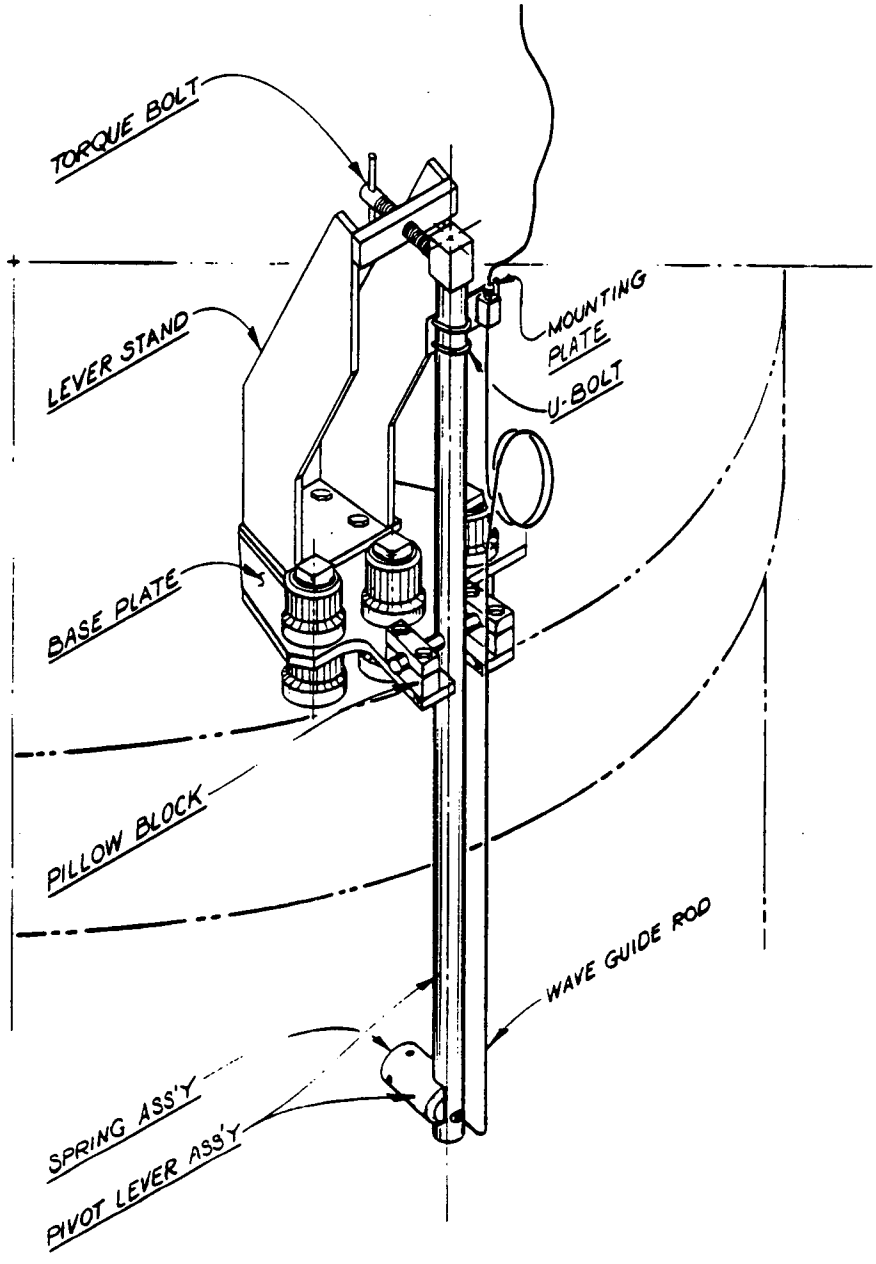

Fig. 4.3. AE wave-guide adapter for shell.

test, the pool level must be about 12 in. below the beam-tube nozzles. Having the waveguides and appropriate portions of the vessel outer surface dry during the hydro test results in greater AE sensitivity.

The procedure used for installing the AE waveguide adapters for the August 4, 1987, hydro test is included in Appendix A.

4.3 Application of TV/Audio Equipment

Remotely controlled TV cameras shall be placed at grating level or below to view each beam-tube nozzle and surrounding area, and each camera shall have its own monitor for continuous viewing and shall be continuously recorded. For the August 4, 1987, hydro test, three remotely controlled cameras and one fixed-position camera were used and were found to be adequate.

A sensitive microphone shall be placed in the dry pool area at an elevation above the top of the vessel. The output should be recorded on one of the TV tapes.

5. CRITERIA RELATED TO VESSEL FAILURE

As mentioned above, vessel failure during the hydro test is defined as the development of a through-wall crack. A run-arrest event without complete penetration of the wall (pop-in) does not constitute failure of the vessel because the arrested crack is not critical; that is, it will not propagate beyond the arrested configuration at or below the hydrotest pressure, and thus it is no different than a similar existing subcritical flaw that has escaped detection.

AE instrumentation cannot reliably distinguish between the acoustic emission from part-through and through-wall cracking. Thus, in the event of an acoustic emission that indicates crack-propagation, it is necessary to rely on leak detection to determine if through-wall cracking occurred. As mentioned above, during the HFIR hydro test the vessel and vessel area are to be continuously monitored with TV and AE for leakage from the vessel. Through-wall cracking at high pressure would be expected to produce an unmistakable stream and/or spray of water that can be detected with the TV camera. Leakage would also be detected by AE, which has much greater sensitivity than the TV camera and thus is capable of detecting much smaller leaks.

In the event that a run-arrest event occurs, as determined by the acoustic emission specialist, who must state that there is a high probability that a crack has been detected, ORNL will do the following:

1. Convene a materials review board.
2. Perform improved leak detection; for example, using dyes and/or gas methods to search for small leaks.
3. The materials review board will consider all information, including data from the continued surveillance program, and recommend continued operation, additional tests and analysis, modified hydrostatic testing, or not approve the vessel for continued operation at the current operating conditions.
4. Based on the materials review-board recommendations and all studies, ORNL will decide on operation, derated operation, or suspension of operation.

6. PROCEDURE

Detailed procedures for conducting the hydro test are included in Appendix B.* In summary, after achieving primary-coolant and pool temperatures of 85 ± 2°F, installing all instrumentation, lowering the pool level and checking/calibrating the instrumentation, the pressure is increased, using a main pressurizer pump, in increments of 100 psi until the specified maximum hydro-test pressure is achieved. The TV (picture and audio), pressure and AE should be recorded continuously. At any time that there is an indication of crack propagation and/or leakage, the pressure should be held constant until the situation is resolved. Otherwise, the pressure should be held at each specified level only long enough to observe that there are no indications of crack propagation and/or leakage.

At the conclusion of the test and following depressurization, the AE instrumentation should be checked once again by applying the pulsar transducer to the inner surface of the vessel.

In the event that there is an acoustic-emission indication of crack propagation and no immediate indication of leakage, special care must be taken in the interpretation of the AE data and in checking for leaks, as specified in Section 5 above.

---

*The procedure in Appendix B was written specifically for the August 4, 1987, hydro test and thus specifies a maximum pressure of 900 psi. The procedure will be revised for future tests to specify a lower pressure.

REFERENCES

1. R. D. Cheverton, J. G. Merkle, R. K. Nanstad, *Evaluation of HFIR Pressure-Vessel Integrity Considering Radiation Embrittlement*, ORNL/TM-10444 (advance copy, September 18, 1987).

2. R. D. Cheverton, B. L. Corbett and D. J. Naus, *HFIR Vessel Hydrostatic Proof Test*, ORNL/RRD-INT-9 (October 1987).

3. P. H. Hutton, *Acoustic Emission Monitoring of HFIR Vessel During Hydrostatic Testing - Final Report*, PNL-6345 (in preparation).

4. R. D. Cheverton, D. G. Ball, S. E. Bolt, S. K. Iskander and R. K. Nanstad, *Pressure Vessel Fracture Studies Pertaining to the PWR Thermal-Shock Issue: Experiments TSE-5, TSE-5A and TSE-6*, NUREG/CR-4249 (ORNL-6163), Martin Marietta Energy Systems, Inc., Oak Ridge Natl. Lab., Oak Ridge, Tenn. (June 1985).

5. R. D. Cheverton, D. G. Ball, S. E. Bolt, S. K. Iskander and R. K. Nanstad, *Pressure Vessel Fracture Studies Pertaining to the PWR Thermal-Shock Issue: Experiment TSE-7*, NUREG/CR-4304 (ORNL-6177), Martin Marietta Energy Systems, Inc., Oak Ridge Natl. Lab., Oak Ridge, Tenn. (August 1985).

6. T. E. McSpadden (DOE/EH/HQ), personal communication to R. D. Cheverton (ORNL), May 1987.

PART II APPENDIX A

ACOUSTIC EMISSION MONITORS: ASSEMBLY AND INSTALLATION

OAK RIDGE NATIONAL LABORATORY EQUIPMENT MAINTENANCE STANDARDS REACTOR OPERATIONS SECTION HIGH FLUX ISOTOPE REACTOR	Issue Date: 7/27/87 Latest Rev.: Standard No.: 3075
Submitted by: 7-28-87	Approved by: Task Leader: 7-28-87
Technical Review: 7/28/87	Program Director: 7/28/87 QAM, RRD: R.E. Tenstermaker By B.J. Ward 7/28/87
Standard: Acoustic Emission Monitors	

I. INTRODUCTION

The acoustics associated with crack propagation and/or leaks from the HFIR pressure vessel during the proof test will be monitored by 10 acoustic emission (AE) sensors located on the outside of the vessel at the top and bottom of each beam tube nozzle and at two points near the upper girth weld. This standard describes the steps necessary to assure proper contact pressure and placement of the AE sensors.

Additional procedures for calibration, recording, and evaluation of test data are the responsibility of Phil Hutton of Pacific Northwest Laboratory (PNL), the contract AE expert who will be assisting ORNL during the test.

HFIR Standard 3074 includes the detailed actions for the pressurization of the vessel.

II. REFERENCES

A. HFIR Standard 3074, Vessel Hydrostatic Proof Test

B. Tooling and fixture drawings:

1. M-10070-OD-233-E, HB 2 Surveillance Assemblies
2. M-10070-OD-237-E, HB-1, -3, and -4 Surveillance Assemblies
3. M-10070-OD-240-E, Vessel Wall Surveillance

C. Fig. 1, D-SK-PCH-870717-1, VAE Testing Device HB Surveillance

D. Fig. 2, B-SK-PCH-870727-1, VAE Testing Device Vessel Wall Surveillance

Standard: Acoustic Emission Monitors	Standard No. 3075
Approved by: 7-28-87	Approved by:

IV. PREREQUISITES

A. The reactor pool water level to be at or slightly below grating level.

B. Health Physics and Safety permit for pool entry to be properly completed and signed.

C. Grating to be removed from the circumference of the vessel plus additional grating as required for TV viewing.

D. Grating support structural members to be removed from HB-1 and HB-4 area to allow access to these nozzles.

E. Underwater lighting at all four beam tube nozzles.

F. Underwater TV camera and monitor.

V. PROCEDURE

Shop assembly and testing of AE sensor fixtures

	Initials	Date
1. Using wave guides provided by PNL, assemble each spring cartridge per detail Fig. 1.		
HB-1 upper	_____	_____
HB-1 lower	_____	_____
HB-2 upper	_____	_____
HB-2 lower	_____	_____
HB-3 upper	_____	_____
HB-3 lower	_____	_____
HB-4 upper	_____	_____
HB-4 lower	_____	_____
V-1 (above HB-1)	_____	_____
V-4 (above HB-4)	_____	_____

Standard: Acoustic Emission Monitors	Standard No. 3075
Approved by: [illegible] 7-28-87	Approved by: B L Gabbert

			Initials	Date
2. Using radiused fixture and spring scale, set spring tension for approximately 50 lb contact pressure at fixture compression limits.				
HB-1 upper	_____	lb	_____	_____
HB-1 lower	_____	lb	_____	_____
HB-2 upper	_____	lb	_____	_____
HB-2 lower	_____	lb	_____	_____
HB-3 upper	_____	lb	_____	_____
HB-3 lower	_____	lb	_____	_____
HB-4 upper	_____	lb	_____	_____
HB-4 lower	_____	lb	_____	_____
V-1	_____	lb	_____	_____
V-4	_____	lb	_____	_____
3. Secure wave guides and preamplifiers per directions of PNL personnel (Ref. Fig. 1 and Fig. 2).			_____	_____

Training

1. Using mockup beam nozzle fixture and vessel mockup, conduct training session on installation and clamping of fixtures.

2. Persons qualified to install fixtures.

Name: _____	Date: _____	_____	_____	
Name: _____	Date: _____	_____	_____	
Name: _____	Date: _____	_____	_____	
Name: _____	Date: _____	_____	_____	
Name: _____	Date: _____	_____	_____	

Standard: Acoustic Emission Monitors	Standard No. 3075
Approved by: 7-28-87	Approved by:

	Initials	Date
Installation		
1. HB-1		
With spanner nut positioned at its upper travel limit, lower fixture along the NE side of HB-1 and position atop the nozzle.	_____	_____
Position fixture mast as vertical as practical, then force downward, compressing the upper spring cartridge onto the nozzle.	_____	_____
While holding fixture in compressed position, rotate the spanner nut clockwise, clamping and compressing the lower spring cartridge. When fully compressed, turn the spanner nut an additional two turns.	_____	_____
Using TV, verify contact at each upper gusset and at the stop ring on the bottom cartridge.	_____	_____
Position tie-rod assembly over a convenient vessel head stud and tighten thumb screws to secure top end of mast.	_____	_____
Using TV and/or direct vision, verify that the wave guide is clear of contact with any object.	_____	_____
Using inclinometer, measure and record the angle of the mast: _____ deg. (Rotation from vertical around axis of beam tube.)	_____	_____
2. HB-2		
With spanner nut positioned at its upper travel limit, lower fixture along the NE side of HB-2 and position atop the nozzle.	_____	_____
Position fixture mast as vertical as practical, then force downward, compressing the upper spring cartridge onto the nozzle.	_____	_____

Standard: Acoustic Emission Monitors	Standard No. 3075
Approved by: 7-28-87	Approved by:

	Initials	Date
2. HB-2 (continued)		
While holding fixture in compressed position, rotate the spanner nut clockwise, clamping and compressing the lower spring cartridge. When fully compressed, turn the spanner nut an additional two turns.	_____	_____
Using TV, verify contact at each upper gusset and at the stop ring on the bottom cartridge.	_____	_____
Position tie-rod assembly over a convenient vessel head stud and tighten thumb screws to secure top end of mast.	_____	_____
Using TV and/or direct vision, verify that the wave guide is clear of contact with any object.	_____	_____
Using inclinometer, measure and record the angle of the mast: _____ deg.	_____	_____
3. HB-3		
With spanner nut positioned at its upper travel limit, lower fixture along the NW side of HB-3 and position atop the nozzle.	_____	_____
Position fixture mast as vertical as practical, then force downward, compressing the upper spring cartridge onto the nozzle.	_____	_____
While holding fixture in compressed position, rotate the spanner nut clockwise, clamping and compressing the lower spring cartridge. When fully compressed, turn the spanner nut an additional two turns.	_____	_____
Using TV, verify contact at each upper gusset and at the stop ring on the bottom cartridge.	_____	_____

Standard: Acoustic Emission Monitors	Standard No. 3075
Approved by: [illegible] 7-28-87	Approved by: B L [illegible]

	Initials	Date
3. HB-3 (continued)		
Position tie-rod assembly over a convenient vessel head stud and tighten thumb screws to secure top end of mast.	_____	_____
Using TV and/or direct vision, verify that the wave guide is clear of contact with any object.	_____	_____
Using inclinometer, measure and record the angle of the mast: _____ deg.	_____	_____
4. HB-4		
With spanner nut positioned at its upper travel limit, lower fixture along the NW side of HB-4 and position atop the nozzle.	_____	_____
Position fixture mast as vertical as practical, then force downward, compressing the upper spring cartridge onto the nozzle.	_____	_____
While holding fixture in compressed position, rotate the spanner nut clockwise, clamping and compressing the lower spring cartridge. When fully compressed, turn the spanner nut an additional two turns.	_____	_____
Using TV, verify contact at each upper gusset and at the stop ring on the bottom cartridge.	_____	_____
Position tie-rod assembly over a convenient vessel head stud and tighten thumb screws to secure top end of mast.	_____	_____
Using TV and/or direct vision, verify that the wave guide is clear of contact with any object.	_____	_____
Using inclinometer, measure and record the angle of the mast: _____ deg.	_____	_____

Standard: Acoustic Emission Monitors	Standard No. 3075
Approved by: 7-28-87	Approved by:

	Initials	Date
5. V-1		
Position base plate over studs 10, 11, and 12. Secure with spare VH nuts.	_____	_____
Lower fixture onto base plate and secure to pillow blocks.	_____	_____
Turn T-screw until spring cartridge compresses, and the cartridge housing contacts the vessel wall.	_____	_____
Verify contact.	_____	_____
6. V-4		
Position base plate over studs 27, 28, and 29. Secure with spare VH nuts.	_____	_____
Lower fixture onto base plate and secure to pillow blocks.	_____	_____
Turn T-screw until spring cartridge compresses, and the cartridge housing contacts the vessel wall.	_____	_____
Verify contact.	_____	_____

Connections from the preamps to the monitoring and recording equipment will be done per directions of PNL personnel.

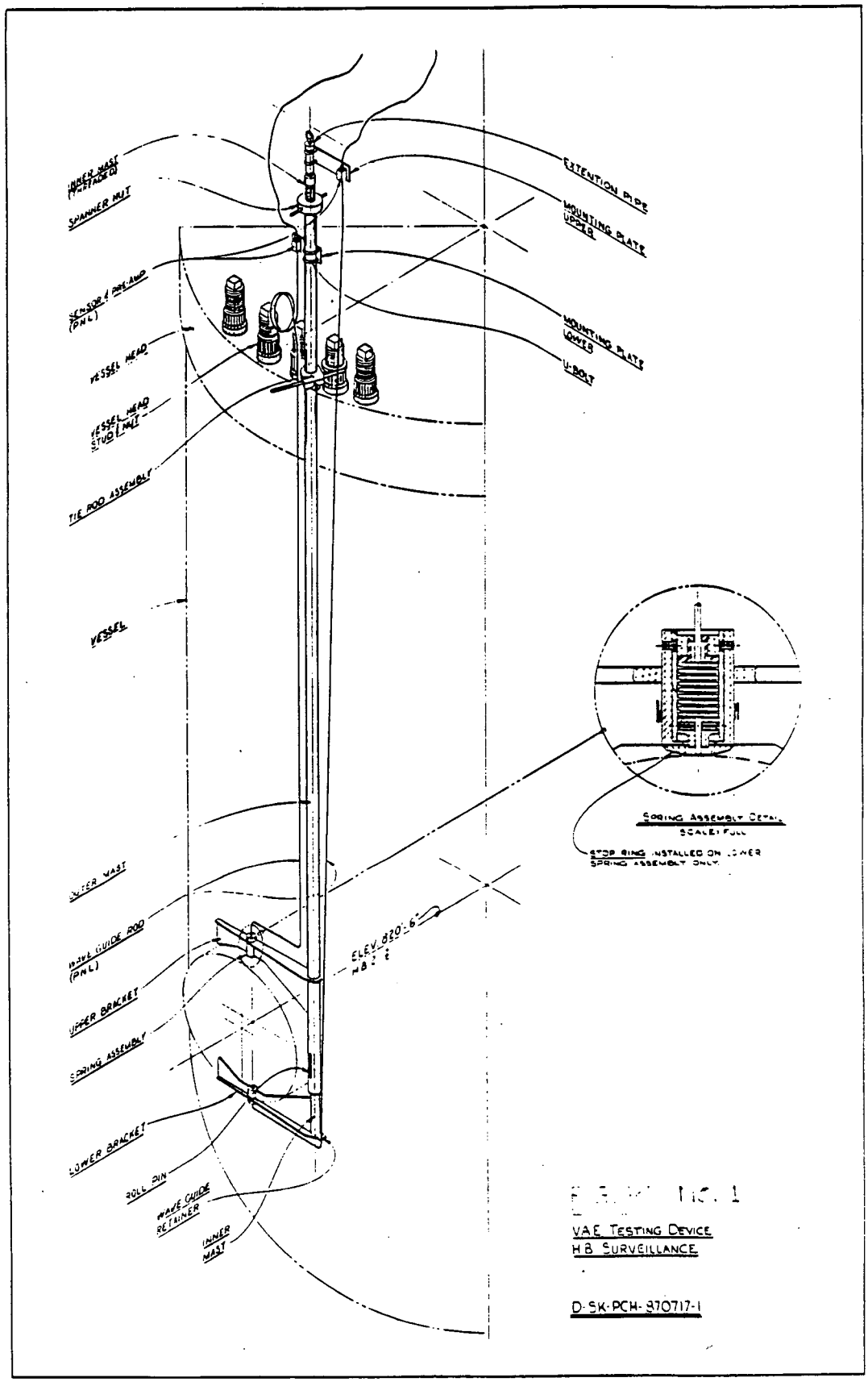

FIG. 1

VAE TESTING DEVICE
HB SURVEILLANCE

D-SK-PCH-870717-1

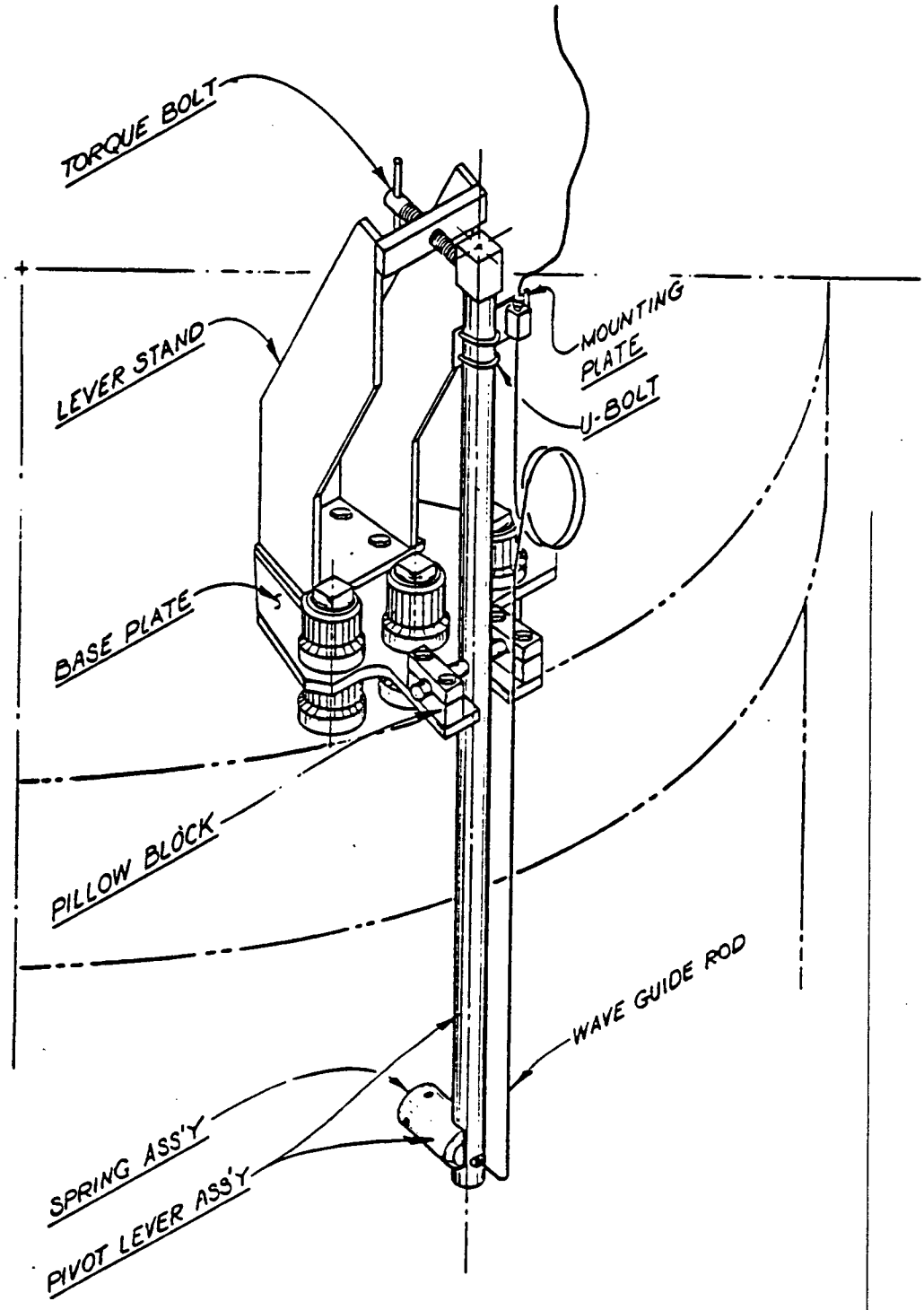

V.A.E. TESTING DEVICE
VESSEL WALL SURVEILLANCE
SCALE: $\frac{1}{8}$ = 1"

PART II APPENDIX B

HFIR HYDROSTATIC PROOF TEST

OAK RIDGE NATIONAL LABORATORY EQUIPMENT MAINTENANCE STANDARDS REACTOR OPERATIONS SECTION HIGH FLUX ISOTOPE REACTOR	Issue Date: 7/8/87 Latest Rev.: Standard No.: 3074
Submitted by: M B Farrar 7/29/87	Approved by: Task Leader: B L Calvert 7/29/87
Technical Review: R O Quertos 7/29/87	Program Director: J. L. Wall 7/29/87 QAM, RRD:
Standard: Vessel Hydrostatic Proof Test	

I. INTRODUCTION

The hydrotest will be conducted while monitoring acoustic emissions from the pressure vessel. Therefore, the acoustic emission monitoring equipment must be installed and operable, and all miscellaneous maintenance jobs involving openings and appendages in the primary coolant system must be completed before the start of the hydrotest.

II. REFERENCES

A. Safety Assessment (attached).

B. HFIR Operating Manual ORNL/TM-1168/R1, Section 6.1.

C. Reactor Piping Drawings

1546-01-M-5541	Primary Coolant High Pressure System - Engineering Flow Diagram
1546-01-M-5501	Engineering Flow Diagram - Pool Coolant

III. PRECAUTIONS

A. The HFIR operating manual specifies protective clothing requirements for entry into the reactor pool. These requirements shall be adhered to at all times.

B. Pressures up to approximately 900 psi will be employed in the leak test. Extreme caution must be exercised when bleeding lines or working around equipment containing high pressure.

C. High radiation levels may be encountered when the water is lowered in the reactor pool. This area must be carefully surveyed by Health Physics personnel. A radiation work permit shall be prepared before entry into the pool.

Standard: Vessel Hydrostatic Proof Test	Standard No. 3074
Approved by: B L Calvert 7/29/87	Approved by: [illegible] 7/29/87

IV. PREREQUISITES FOR PRESSURIZATION

		Initials	Date
1.	Calibrate primary system test gauge, digital pressure readout, and the pressure controller in the control room. PRC-127 Calibration date: _____ PI-104 Calibration date: _____ Test gauge Calibration date: _____	_____ _____ _____	_____ _____ _____
2.	Calibrate primary system temperature monitors.	_____	_____
3.	Set pressurizer pump high pressure cut-off switches at 925 psi. Calibration date: _____	_____	_____
4.	The cover of the primary coolant strainer must be in place and secured.	_____	_____
5.	Rod drive and pressure balance equipment in the subpile room must be in normal condition and able to withstand full system pressure.	_____	_____
6.	Operate one pony motor pump for at least 15 min to assure that the the water temperature in the primary system is 85°F ± 2°F according to the safety system inlet temperature monitors. Shut the pony motor off after readings have been taken. TR 100-1A _____ TR 100-2A _____ TR 100-3A _____	_____ _____ _____	_____ _____ _____
7.	Electrical power must be available for the pressurizer and cleanup pumps.	_____	_____
8.	The primary system pressure safety relief valves in heat exchanger cell 110 should be operable with settings of 975 and 1025 psi. These valves were last tested on November 19, 1986.	_____	_____

Standard: Vessel Hydrostatic Proof Test	Standard No. 3074
Approved by: B L Corbett 7/29/87	Approved by: J L Dahl 7/29/87

	Initials	Date
9. The primary and pool cleanup systems must be operable.		
10. Close the hydraulic tube system valves in the reactor pool		

V. PROCEDURE

The accomplishment of each step of the procedure is to be acknowledged by the dated initials of the task leader.

	Initials	Date
1. Lower the water in the reactor pool to grating level.		
2. With the water level in the reactor pool at, or slightly below, the grating level, position colored plastic sheets to deflect the water leaking from the clean pool. This leaking water must be prevented from disturbing the surface of the water in the reactor pool.		
3. Install the acoustic emission wave guides at grating level and pull signal leads to the instrumentation.		
4. Mop and/or blow dry the vessel head top surface and seal surfaces beneath the vessel head flanges and hatch.*		
5. Remove the grating as required and position the TV cameras and above-water lights to observe all four beam tube nozzles. The view shown on the TV monitors should include a water surface approximately 1 ft below the beam tube nozzles. Position the TV monitors on the reactor bay floor as far away from the reactor pool as possible.		
6. Evacuate all personnel from the reactor pool and lower the water level in the reactor pool by pumping water through the pool deaerator into the clean pools. Pump the pool		

*If the drying procedure is blow dry, the Health Physicist will monitor for airborne contamination.

Standard: Vessel Hydrostatic Proof Test	Standard No. 3074
Approved by: B K Carlson 7/29/87	Approved by M. Dahl 7/29/87

	Initials	Date
surge tank to the pool water underground storage tank as required to keep the surge tank from overflowing. CAUTION: Carefully monitor the radiation level in the reactor bay as the pool level drops. Also, the radiation level should be checked at the engineering facility flanges in the experiment room. Deactivate the building FRCAS, if required. Continue lowering the reactor pool water until the level is approximately 1 ft below the beam tube nozzles.	_____	_____
7. Primary coolant system closed and ready for pressurization.	_____	_____
8. The following heat exchanger-pump cell block valves should be open:		
FCV-140, FCV-149, HCV-180A	_____	_____
FCV-142, FCV-151, HCV-181A	_____	_____
FCV-144, FCV-153, HCV-182A	_____	_____
FCV-550, FCV-551, HCV-583A	_____	_____
9. The following heat exchanger-pump cell seal block valves should be closed:		
HCV-164-A, -B; HV-165-A, -B; HV-166-A, -B; HV-557-A, -B	_____	_____
10. Ready the main pressurizer pumps for operation.	_____	_____
a. Make sure the block valve to the high pressure pump cut-off switch on each pump is open (switch should be set at 925 psi).	_____	_____
b. Open V-1679 and V-1680 on each side of flow meter FIT-215 in demineralized water supply line 1612 to the head tank.	_____	_____

Standard: Vessel Hydrostatic Proof Test	Standard No. 3074
Approved by: B L Corbett 7/29/81	Approved by: J L Dahl 7/29/81

	Initials	Date
c. Open the suction valves V-1050, V-1051, and V-1052 to the two main pressurizer pumps.	_____	_____
d. Open pressurizer pump discharge valves V-1056 and V-1058.	_____	_____
e. Open valves V-2248 and V-2249 in the water cooling lines to the pump couplings.	_____	_____
11. Pressurize the system.		
a. Make sure the speed control rheostats on both main pressurizer pumps are set at "0."	_____	_____
b. Set the letdown block valve key switch to the "closed" position.	_____	_____
c. Start either "A" or "B" pressurizer pump. Slowly increase the pump speed while observing the system pressure on PI-104. Do not exceed 100 psig pressure.	_____	_____
d. Assure the pressurizer pump discharge flow is approximately 0. Adjust pump speed to maintain a system pressure of 100 psig as needed.	_____	_____
e. Inspect primary system for leaks.	_____	_____
(1) Pipe tunnel	_____	_____
(2) Heat exchanger cells	_____	_____
(3) Subpile room	_____	_____
f. If the radiation level above the reactor pool permits, make a visual inspection of all engineering facility and beam tube Marman clamps and vessel head flanges. If the radiation level does not permit a direct observation, observe the components visible in the TV monitor.	_____	_____

Standard: Vessel Hydrostatic Proof Test	Standard No. 3074
Approved by: B L Carlotto 7/29/87	Approved by L L Wald 7/29/87

	Initials	Date
g. If no leaks are observed at 100 psig, slowly increase the primary system pressure in 100 psig increments to 900 psig. Take acoustic emission data during the transition from each* 100-psig increment to the next.		
Transition data recorded		
100 to 200 psig	_____	_____
200 to 300 psig	_____	_____
300 to 400 psig	_____	_____
400 to 500 psig	_____	_____
500 to 600 psig	_____	_____
600 to 700 psig	_____	_____
700 to 800 psig	_____	_____
800 to 900 psig	_____	_____
h. Reactor pressurization verified by Quality Division Representative.	_____	_____
i. Perform a final primary system leak check per steps 11.e and 11.f.	_____	_____
12. After the leak test has been completed and all data have been recorded, the primary system should be returned to normal conditions.		
a. Depressurize the system.	_____	_____
b. Open the hydraulic tube system valves in the reactor pool.	_____	_____
c. Open the primary pump seal block valves.	_____	_____

All requirements of this standard have been reviewed and are acceptable.

L L Wald 7/29/87
Program Director Date

*The facility supervisor will assure all issues concerning crack propagation and/or leakage shall be resolved prior to directing an increase in pressure.

Internal Distribution

1. J. L. Anderson
2. S. J. Ball
3. W. K. Brown
4. S. E. Burnette
5. R. D. Cheverton
6. D. H. Cook
7. B. L. Corbett
8. W. G. Craddick
9. T. L. Dahl
10. M. B. Farrar
11. R. E. Fenstermaker
12. T. P. Hamrick
13. R. M. Harrington
14. J. T. Hummel
15. S. S. Hurt
16. M. L. Jones
17. A. L. Lotts
18. D. M. McGinty
19. J. R. McWherter
20. P. E. Melroy
21. J. G. Merkle
22. J. R. Merriman
23. F. R. Mynatt
24. R. K. Nanstad
25. D. J. Naus
26. T. W. Pickel
27. H. B. Piper
28. C. E. Pugh
29. H. E. Trammell
30. D. B. Trauger
31. R. S. Wiltshire
32. A. Zucker
33. ORNL Patent Office
34. Document Reference Section

35–36. Laboratory Records Department

37. Laboratory Records (RC)

38–58. Research Reactors Division Library

External Distribution

59. S. W. Ahrends, U.S. Department of Energy, Oak Ridge Operations Office, Downtown Concourse, Oak Ridge, TN 37831
60. Dr. S. H. Bush, Review & Syntheses Associates, 630 Cedar Avenue, Richland, WA 99352
61. W. C. Gilbert, U.S. Department of Energy, Oak Ridge Operations Office, Federal Building, Oak Ridge, TN 37831
62. Dr. A. N. Goland, Brookhaven National Laboratory, Building 179-A, Upton, NY 11973
63. Dr. J. M. Hendrie, Brookhaven National Laboratory, Building 197-C, Upton, NY 11973
64. E. E. Hoffman, U.S. Department of Energy, Oak Ridge Operations Office, Federal Building, Oak Ridge, TN 37831
65. T. M. Jelinek, U.S. Department of Energy, Oak Ridge Operations Office, Federal Building, Oak Ridge, TN 37831
66. G. R. Irwin, 7306 Edmonston Avenue, College Park, MD 20740
67. J. A. Lenhard, Assistant Manager, Energy Research and Development, U.S. Department of Energy, Oak Ridge Operations Office, P.O. Box E, Oak Ridge, TN 37831
68. G. C. Manthey, U.S. Department of Energy, Oak Ridge Operations Office, Federal Building, Oak Ridge, TN 37831

69–79. C. L. Matthews, U.S. Department of Energy, Oak Ridge Operations Office, Federal Building, Oak Ridge, TN 37831