MARTIN MARIETTA ENERGY SYSTEMS LIBRARIES

3 4456 0276280 1

ORNL/TM-10708

ornl

OAK RIDGE
NATIONAL
LABORATORY

MARTIN MARIETTA

High Vacuum Chamber for Elevated-Temperature Tensile Testing

D. N. Braski
J. R. Gibson
L. J. Turner
R. L. Sy

OAK RIDGE NATIONAL LABORATORY
CENTRAL RESEARCH LIBRARY
CIRCULATION SECTION
4500N ROOM 175
LIBRARY LOAN COPY
DO NOT TRANSFER TO ANOTHER PERSON
If you wish someone else to see this report, send in name with report and the library will arrange a loan.
UCN-7969 (3 9-77)

OPERATED BY
MARTIN MARIETTA ENERGY SYSTEMS, INC.
FOR THE UNITED STATES
DEPARTMENT OF ENERGY

Printed in the United States of America. Available from
National Technical Information Service
U.S. Department of Commerce
5285 Port Royal Road, Springfield, Virginia 22161
NTIS price codes—Printed Copy: A03 Microfiche A01

This report was prepared as an account of work sponsored by an agency of the United States Government. Neither the United States Government nor any agency thereof, nor any of their employees, makes any warranty, express or implied, or assumes any legal liability or responsibility for the accuracy, completeness, or usefulness of any information, apparatus, product, or process disclosed, or represents that its use would not infringe privately owned rights. Reference herein to any specific commercial product, process, or service by trade name, trademark, manufacturer, or otherwise, does not necessarily constitute or imply its endorsement, recommendation, or favoring by the United States Government or any agency thereof. The views and opinions of authors expressed herein do not necessarily state or reflect those of the United States Government or any agency thereof.

ORNL/TM-10708
Dist. Category UC-423

Metals and Ceramics Division

HIGH VACUUM CHAMBER FOR ELEVATED-TEMPERATURE TENSILE TESTING

D. N. Braski
J. R. Gibson
L. J. Turner
R. L. Sy

Date Published: May 1988

NOTICE: This document contains information of a preliminary nature. It is subject to revision or correction and therefore does not represent a final report.

Prepared for
DOE Office of Fusion Energy
AT 15 02 03 A

Prepared by the
OAK RIDGE NATIONAL LABORATORY
Oak Ridge, Tennessee 37831
operated by
MARTIN MARIETTA ENERGY SYSTEMS, INC.
for the
U.S. DEPARTMENT OF ENERGY
under Contract DE-AC05-84OR21400

MARTIN MARIETTA ENERGY SYSTEMS LIBRARIES
3 4456 0276280 1

CONTENTS

ABSTRACT 1
1. INTRODUCTION 1
2. GENERAL DESCRIPTION OF SYSTEM 2
3. HIGH VACUUM CHAMBER 2
4. VACUUM SYSTEM 5
5. FURNACE 8
6. CONTROL INSTRUMENTATION 8
7. PERFORMANCE 14
8. SUMMARY 17
ACKNOWLEDGEMENTS 17
REFERENCE 17

HIGH VACUUM CHAMBER FOR ELEVATED TEMPERATURE TENSILE TESTING*

D. N. Braski, J. R. Gibson,† L. J. Turner, and R. L. Sy‡

ABSTRACT

A chamber for tensile testing vanadium alloys at pressures of 10^{-5} Pa (10^{-7} torr) and temperatures up to 800°C has been designed and fabricated. Features of the test system include an 20.3-cm (8-in.) cryopump and a tungsten element furnace. The chamber can be pumped to a pressure less than 10^{-4} Pa (10^{-6} torr) in less than 10 min. The stress-strain curve obtained for the V-20Ti alloy at 600°C was consistent with results obtained for the same alloy on a second, proven machine.

1. INTRODUCTION

A research effort is under way to identify and develop a material for the structural first wall of a fusion reactor. Vanadium alloys, which have advantages such as inherent low residual radioactivity after radiation, are among the present candidate materials for this application. To simulate the conditions needed to develop a vanadium alloy first wall, it is necessary to preimplant helium into the alloy using the "tritium trick."[1] Unfortunately, it is impossible to remove all of the tritium from the material after this procedure and all further handling and testing must be conducted on dedicated systems. One such system was designed to obtain the tensile properties of vanadium alloys from room temperature up to 800°C, with the system operating under high vacuum conditions. A high vacuum environment is necessary to prevent the alloys from picking up oxygen and nitrogen that reduce their ductility. To expedite the testing of large numbers of specimens, it is also desirable that

*Research sponsored by the Office of Fusion Energy, U.S. Department of Energy, under contract DE-AC05-84OR21400 with Martin Marietta Energy Systems, Inc.

†Operations Division.

‡Plant and Equipment Division.

the high vacuum range of 10^{-5} Pa be achieved within reasonably short pumping times. A description of the high vacuum system and its initial performance is contained herein.

2. GENERAL DESCRIPTION OF SYSTEM

Figure 1 is a photograph of the high vacuum tensile testing system. A cryopumped furnace chamber is mounted in an Instron* desk top Model 1130 tensile testing machine that was installed in a special vented enclosure. The enclosure has sliding acrylic doors located in front to permit access to the chamber and the Instron control panel. Doors at either end of the enclosure permit entry for inspection and maintenance of the pumps and vacuum system. The enclosure provides safe containment and removal of any tritium would be expected to escape the chamber. The electronic console located outside of the enclosure contains the components needed to control and monitor both the vacuum system and the resistance furnace within the chamber. The furnace is used to heat specimens to temperatures as high as 800°C for testing under tensile loads. Specimen temperature is controlled and monitored by three separate Chromel-Alumel† thermocouples, each encased in 1.0-mm-diam stainless steel sheaths. The tips of the thermocouples are placed in contact with the gage section of the tensile specimen.

3. HIGH VACUUM CHAMBER

A front view of the high vacuum chamber mounted in the Instron machine is shown in Fig. 2. The chamber body is constructed of 3.2-mm-thick (1/8-in.) type 304L stainless steel that was rolled into a cylinder and tungsten-inert-gas welded. Both inside and outside surfaces of the chamber body were retained in the as-received or mill finish of the original metal sheet. The front door to the cylindrical chamber is hinged on the left and is sealed with an O-ring. The door is secured during pumpdown by three hinged C clamps. The bottom pull rod is connected to the base plate of the tensile machine by a 33-cm stainless steel connecting

---

*Instron is a trademark of Instron Corporation, Canton, MA.

†Chromel-Alumel is a trademark of Hoskins Manufacturing Co.

Fig. 1. Photograph of high vacuum tensile testing system.

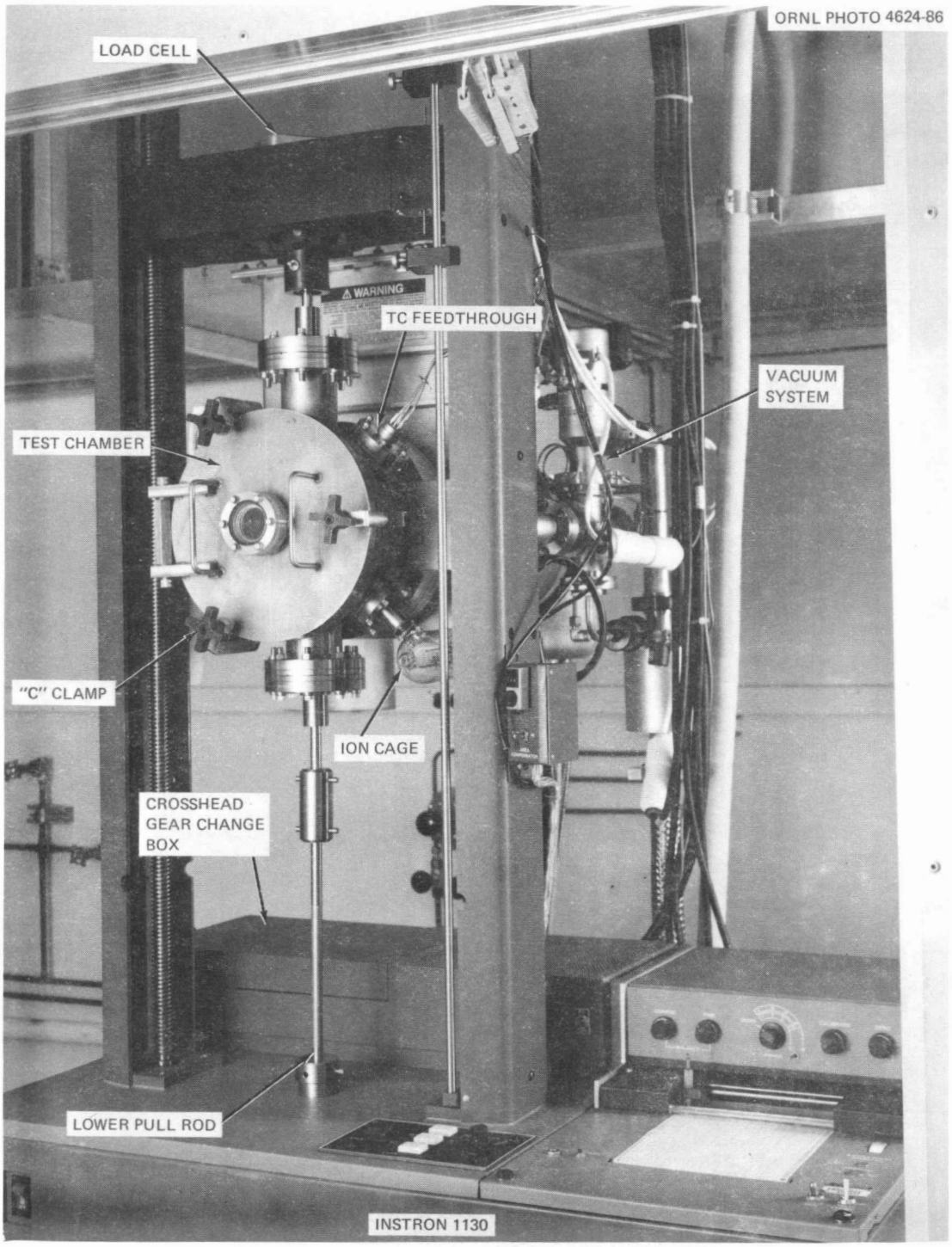

Fig. 2. Front view of high vacuum test chamber.

rod and pin-type coupling. The chamber was mounted relatively high in the machine to allow for enough clearance to stack as many as five "decade reducers" in the machine control section. Each mechanically geared unit will reduce the crosshead speed by a factor of 10 when stacked over the crosshead drive spindles. The slower crosshead speeds are used for creep-type, low-strain rate tensile testing. The higher mounting also places the specimen and viewing window at eye level, which is an advantage for both loading and monitoring specimens. Feedthroughs of the chamber include one that will accommodate ten thermocouples and another for the ionization gage tube as shown in Fig. 2. A third feedthrough contains two electrical conductors that supply power to the furnace. This feedthrough is mounted directly opposite the ionization tube but is not visible in the photograph. All of the feedthroughs utilize conflate flanges sealed with copper gaskets.

4. VACUUM SYSTEM

A Varian* 20.3-cm (8-in.) cryopump with an integral high vacuum valve is mounted directly behind the chamber, as shown more clearly in a side view of the system in Fig. 3. A roughing line connects the chamber to a 5-cfm mechanical pump located beneath the table. A sieve trap was installed directly above the flexible portion of the roughing pump to prevent backstreaming of oil into the chamber during pumpdown. Oil backstreaming also can be minimized during pumpdown, by closing the roughing valve and opening the high vacuum valve ("crossover") at approximately 13 Pa (10^{-1} torr). The mechanical pump is vented through a rubber hose directly into the exhaust duct to prevent the venting of any tritium directly into the enclosure area.

Figure 4 is a schematic diagram of the vacuum system and indicates the locations of the ionization pressure gage and two thermocouple pressure gages (TC-1 and TC-2). The liquid nitrogen/sorption pump connected to the cryopump is used solely for the oil-free pumping of the absorbent material during the regeneration cycle.

---

*Varian is a trademark of Varian Associates, Inc., Lexington, MA.

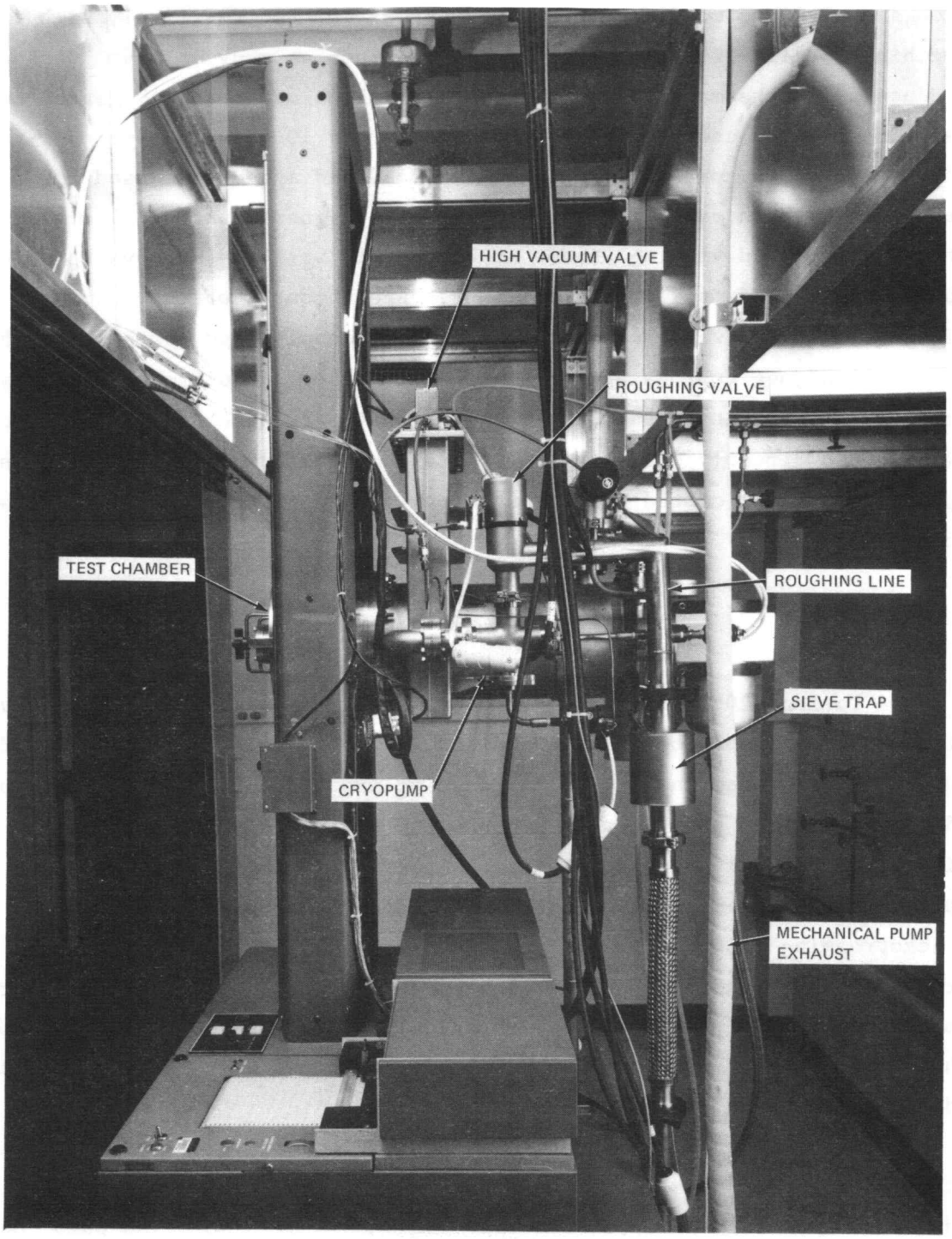

Fig. 3. Side view of high vacuum test chamber showing cryopump location.

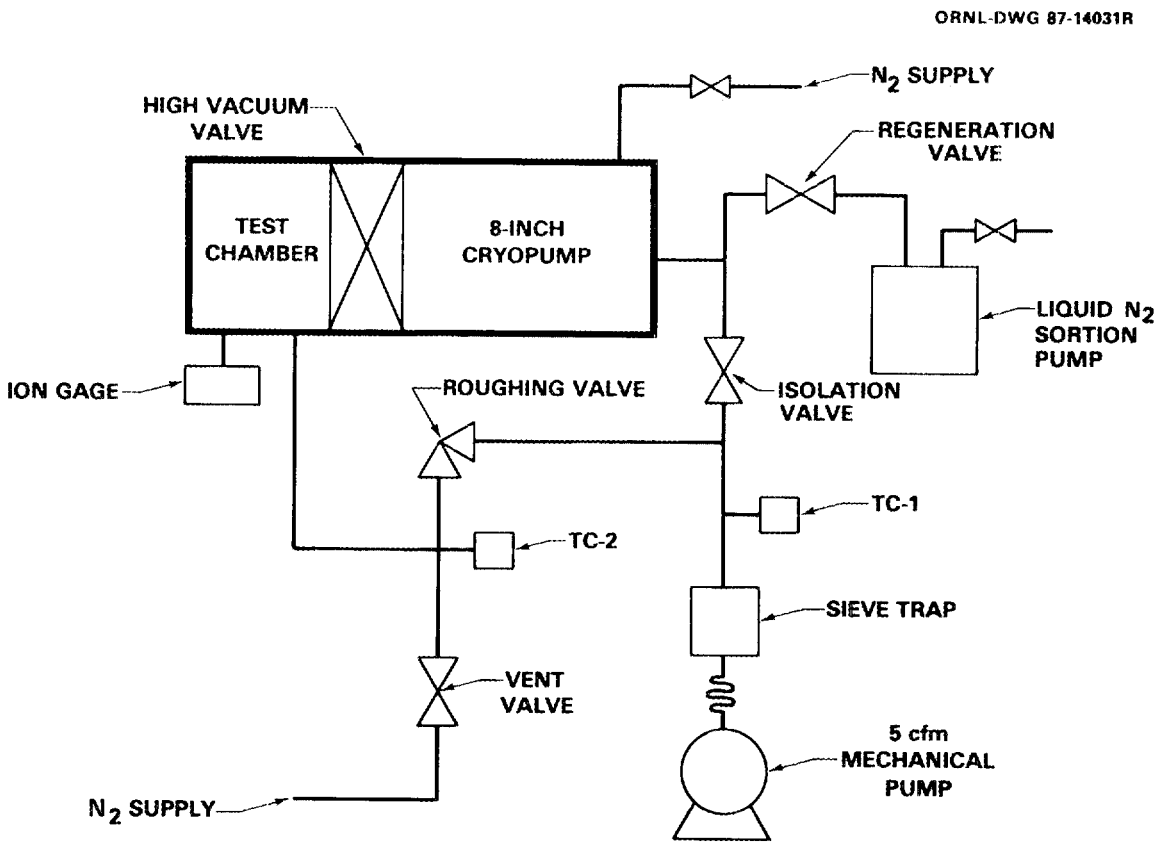

Fig. 4. Schematic diagram of vacuum system.

5. FURNACE

Figure 5 is a photograph of the electrical resistance furnace mounted in the high vacuum chamber. The furnace has a split clamshell design with a diameter of 7.6 cm and a height of 8.6 cm. The furnace incorporates tungsten wire heating elements (1-mm-diam) that are surrounded by three concentric heat shields fabricated from 0.76-mm-thick nickel sheet. The spacing between shields is maintained by spirals of nickel wire that were spot welded to the shields. The power leads are stranded copper wires insulated with Al_2O_3 beads. Adjusting screws on both sides of the furnace support the frame on which the furnace is mounted an allow the operator to adjust the position of the furnace in a transverse direction relative to the load train and specimen. Centering of the specimen in the vertical direction is accomplished by adjusting the lower pull rod. The coupling joining the lower pull rod with the base (Fig. 2) has holes drilled at different center-to-center distances that permit centering of the specimens with different gage lengths relative to the midpoint of the furnace. The tensile specimen shown in Fig. 5 is an "SS-3" type, which is used in irradiation studies, and is 25.4 mm in length. It is secured in the grips with pins. The self-aligning grip assembly was designed by L. J. Turner.

6. CONTROL INSTRUMENTATION

A photograph of the control console for the high vacuum chamber is shown in Fig. 6. The upper three panels are used to control the furnace (except for the cryopump on/off switch), while the lower two panels control the vacuum system. A Barber-Coleman* 523D series solid state temperature controller is used to control furnace temperature, and a Barber-Coleman 121L series temperature limiter protects the furnace from over temperature excursions. Two 4-position thermocouple selector switches are used to select any one of six Chromel-Alumel thermocouples

---

*Barber-Coleman is a trademark of Barber-Coleman Industrial Instruments Division, Rockford, IL.

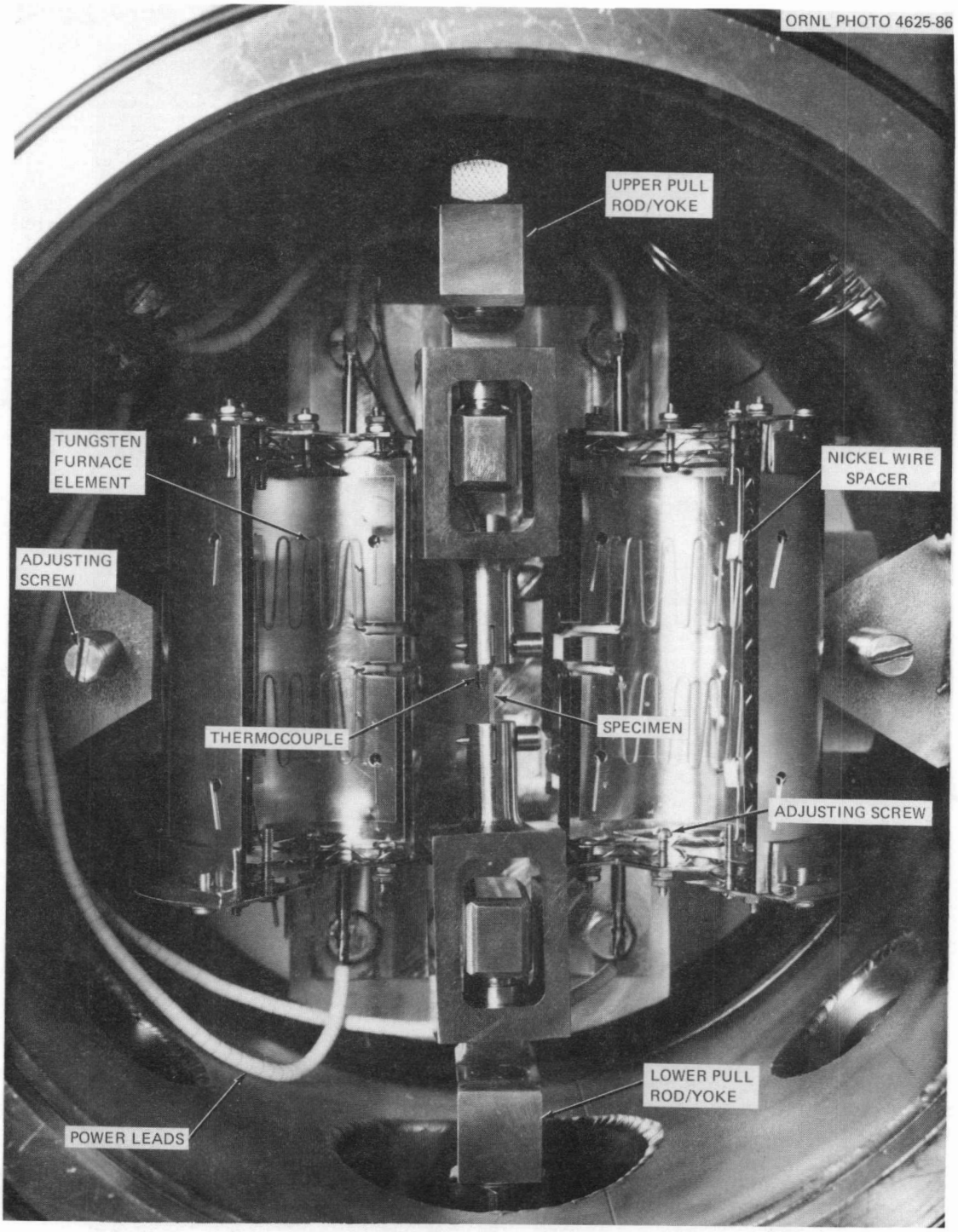

Fig. 5. Photograph of tungsten-element furnace.

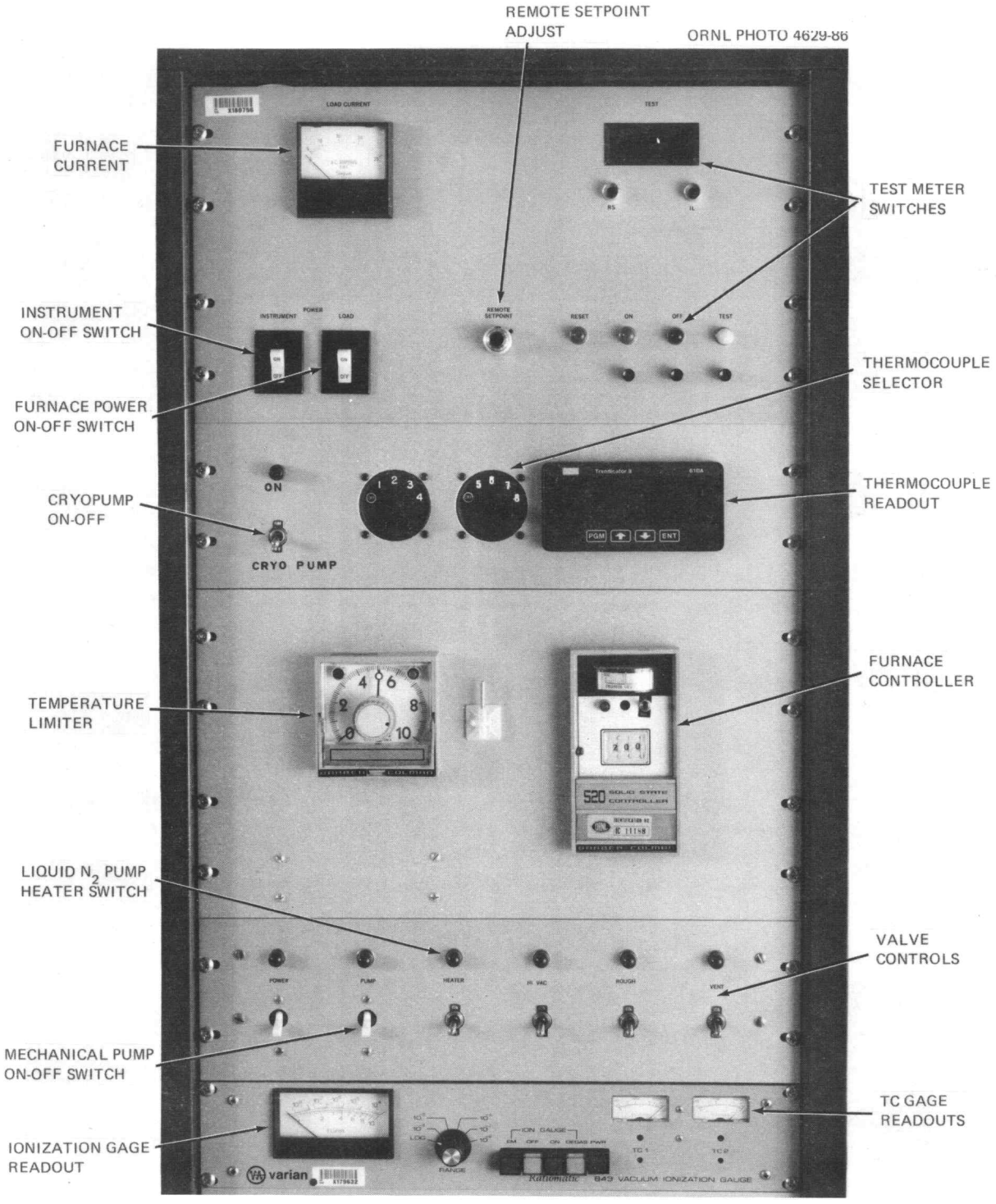

Fig. 6. Electronic control console for the vacuum system and furnace.

in the chamber. Three thermocouples are used to monitor or control the furnace, specimen, and over temperatures, while the remaining three are spares. Temperature is read on a Doric* 610A Trendicator II. A 10-turn potentiometer is used with the Barber-Coleman 523D to remotely adjust the temperature set point. The electrical current supplied to the furnace is monitored with an ammeter located in the top panel on the left side of the control console (Fig. 6). A special test circuit is employed that allows one to check the resistance of the furnace elements and determine if an element is shorted to ground. This circuitry automatically protects the equipment and the operator from mishaps, hence, the term "interlocked" furnace controller is used. the digital meter and switches for this test system are located on the right side of the top panel.

The bottom panel is a Varian 843 vacuum ionization gage controller that is used to monitor pressure. Pressure from both thermocouple gages and the ionization gage can be read from this instrument. The panel directly above the ionization gage controller houses the switches that operate the pneumatic high vacuum, roughing, and vent valves. This panel also contains the power and mechanical pump switches. As mentioned before, the cryopump switch is mounted on the second panel.

The circuit diagrams for the furnace controller are presented in Figs. 7 and 8. Figure 7 shows the Barber-Coleman 523 series temperature controller, the Barber-Coleman 121L temperature limiter, and the relay logic diagram for selecting the operating mode. The circuitry for setting and monitoring the temperature set point is also given. In Fig. 8, the output signal from the temperature controller (pins 13 and 14, Fig. 7) is fed into the Robicon† power controller (Model No. 401-144-2), thus controlling the furnace input power. This type of controller is a phase angle-fired power supply and incorporates limiting of current to protect the tungsten heating elements from excessive current demand on cold start-up. The current limit threshold can be set remotely by a potentiometer on the front panel (not shown in Fig. 6). The right side of the diagram depicts circuitry for determining furnace element resistance, leakage to

---

*Doric is a trademark of Doric Scientific, Division of Emerson Electric Company, San Diego, CA.

†Robicon is a trademark of Robicon Corporation, Pittsburgh, PA.

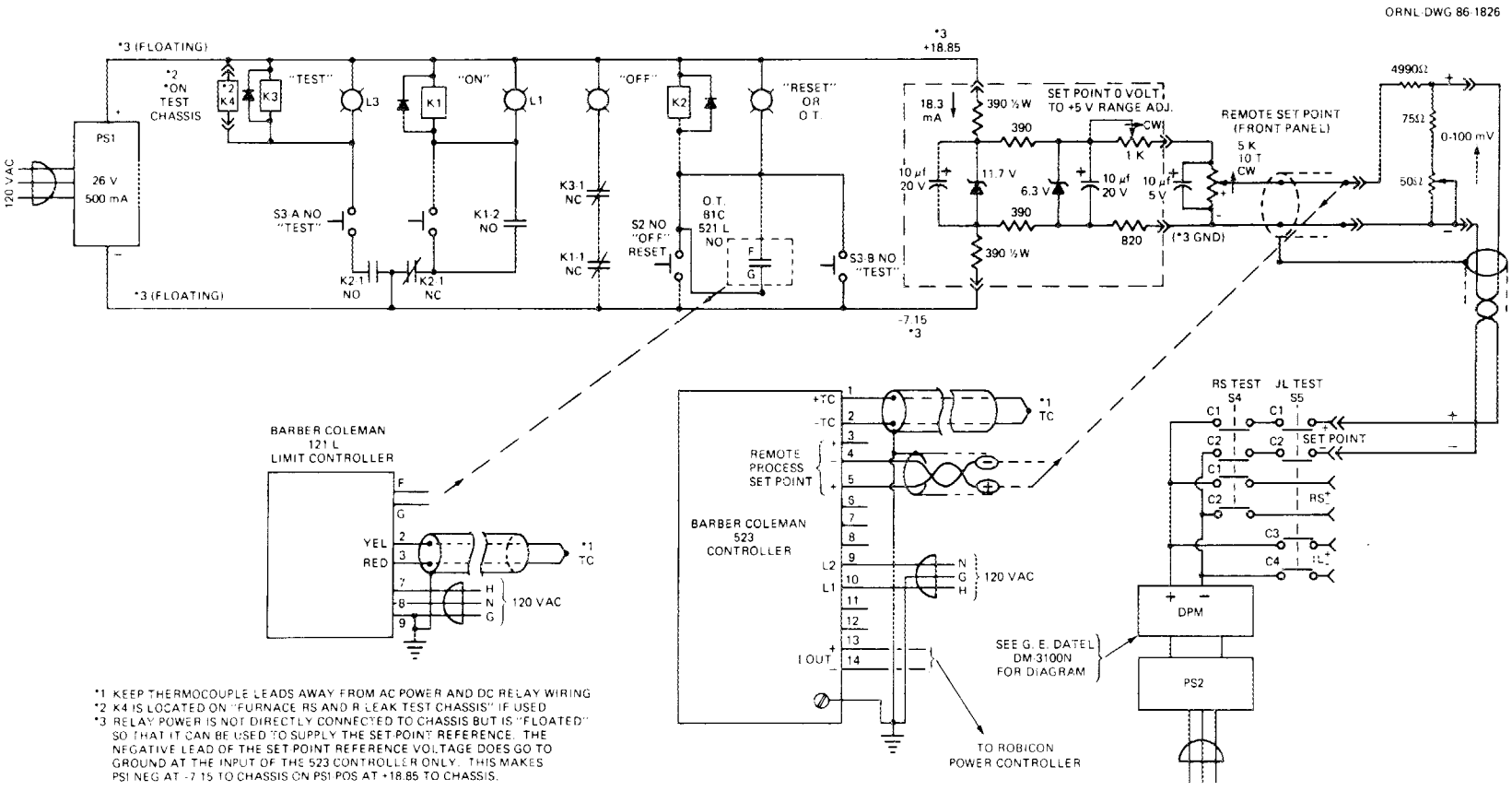

Fig. 7. Schematic diagram of interlocked furnace controller-temperature controller, limiter, and test circuitry. Pins 13 & 14 connect to the power controller in Fig. 8.

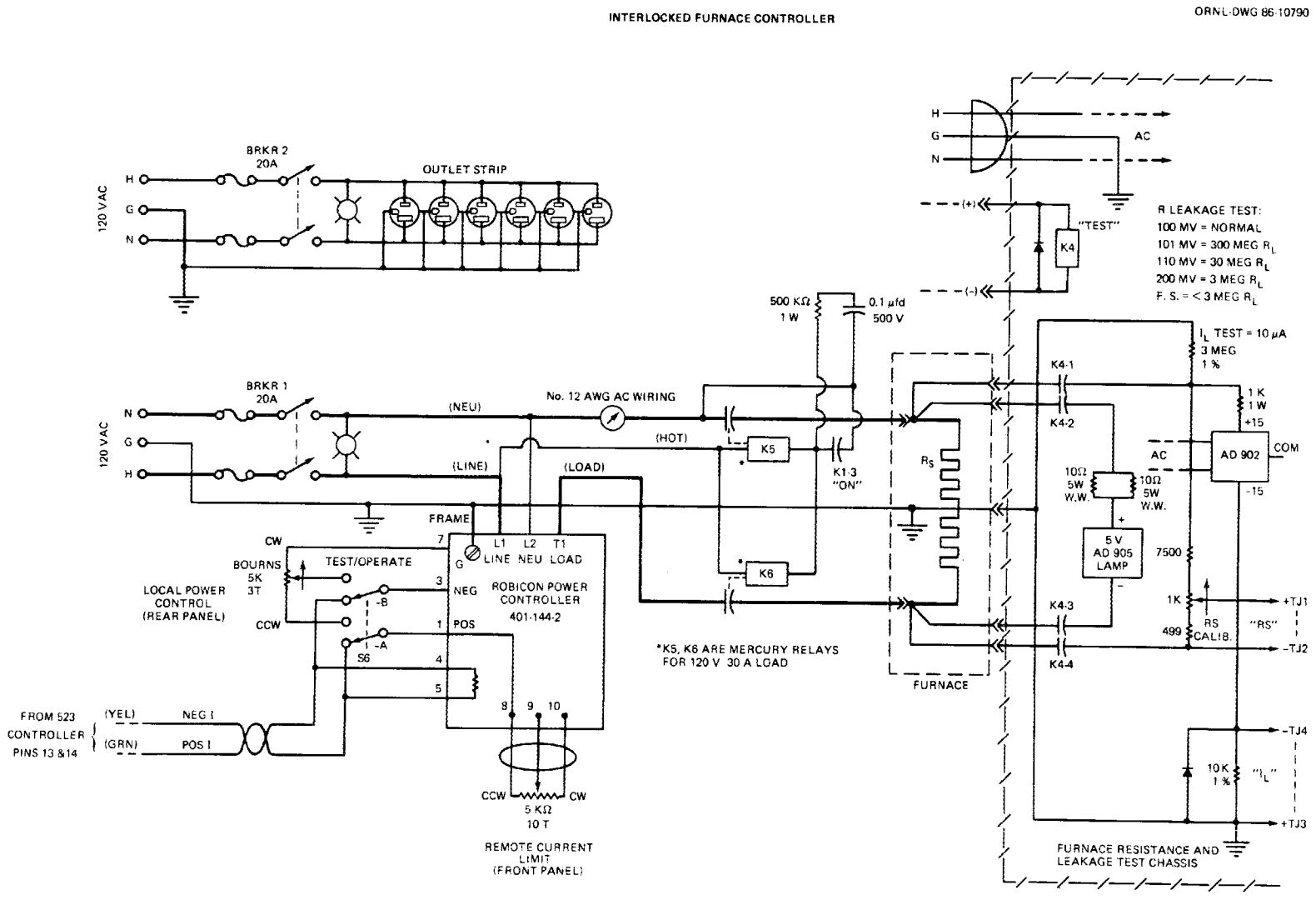

Fig. 8. Schematic diagram of interlocked furnace controller-power controller/furnace circuitry. See Fig. 7 for inputs to the power controller.

ground, and circuit integrity. Used in conjunction with the relay logic (upper portion of Fig. 7), this circuitry provides a safety interlock such that power will not be supplied to the furnace if any furnace elements are shorted to ground.

7. PERFORMANCE

A pumpdown curve showing chamber pressure as a function of time is presented in Fig. 9. A pressure less than 10^{-4} Pa (10^{-6} torr) is required for the testing of vanadium alloys, and this pressure was reached in less than 10 min. An additional 5 to 10 min is needed to heat the specimen to the test temperature followed by a 10 min soak period. Then the tensile test is conducted, the furnace power is turned off, and the furnace is permitted to cool down. The cool down period can be accelerated by bleeding nitrogen gas into the chamber when the specimen temperature is below 200°C. The entire procedure for tensile testing one vanadium specimen at 7×10^{-5} Pa (5×10^{-7} torr) and temperatures from 400 to 600°C takes about 45 min. This relatively short test time provides the necessary productivity required of an alloy development program.

A number of vanadium alloy specimens have been tested in the high vacuum chamber at temperatures from 420 to 600°C. After testing, the specimens were always clean and shiny, indicating that little or no surface oxidation had occurred during testing. One alloy, V-20Ti, was tested at these same temperatures in a second, proven tensile machine to compare the results from both systems. The SS-3 tensile specimen used was 25.4 mm in length with a 7.62-mm-gage length, a 1.52-mm-gage width, and a 0.76-mm thickness. The second system, called the "B255" system, utilizes the same size and type of cryopump and grips but has a significantly different vacuum system geometry and crosshead drive (hydraulic versus screw driven). The stress-strain curves for annealed V-20Ti specimens tested at 600°C on both systems are shown in Fig. 10. Both specimens shown began to deform plastically just below 500 MPa and both exhibited serrated yielding due to dynamic strain aging just before and after the ultimate tensile stress was reached. The good agreement of these two test results demonstrates that the new system is capable of producing reliable results that are consistent with those of a proven system.

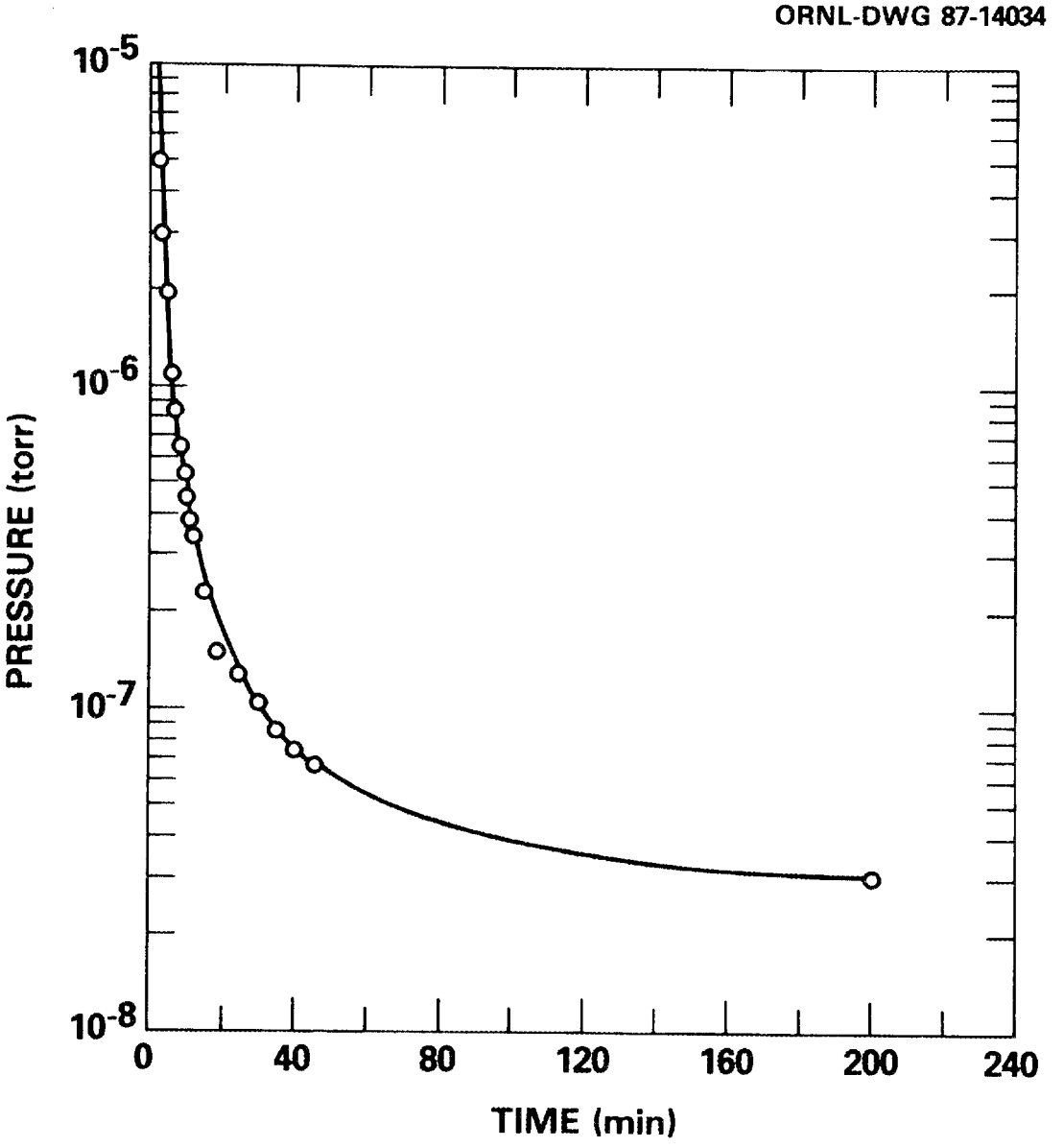

Fig. 9. Pumpdown curves for high vacuum system with furnace at room temperature.

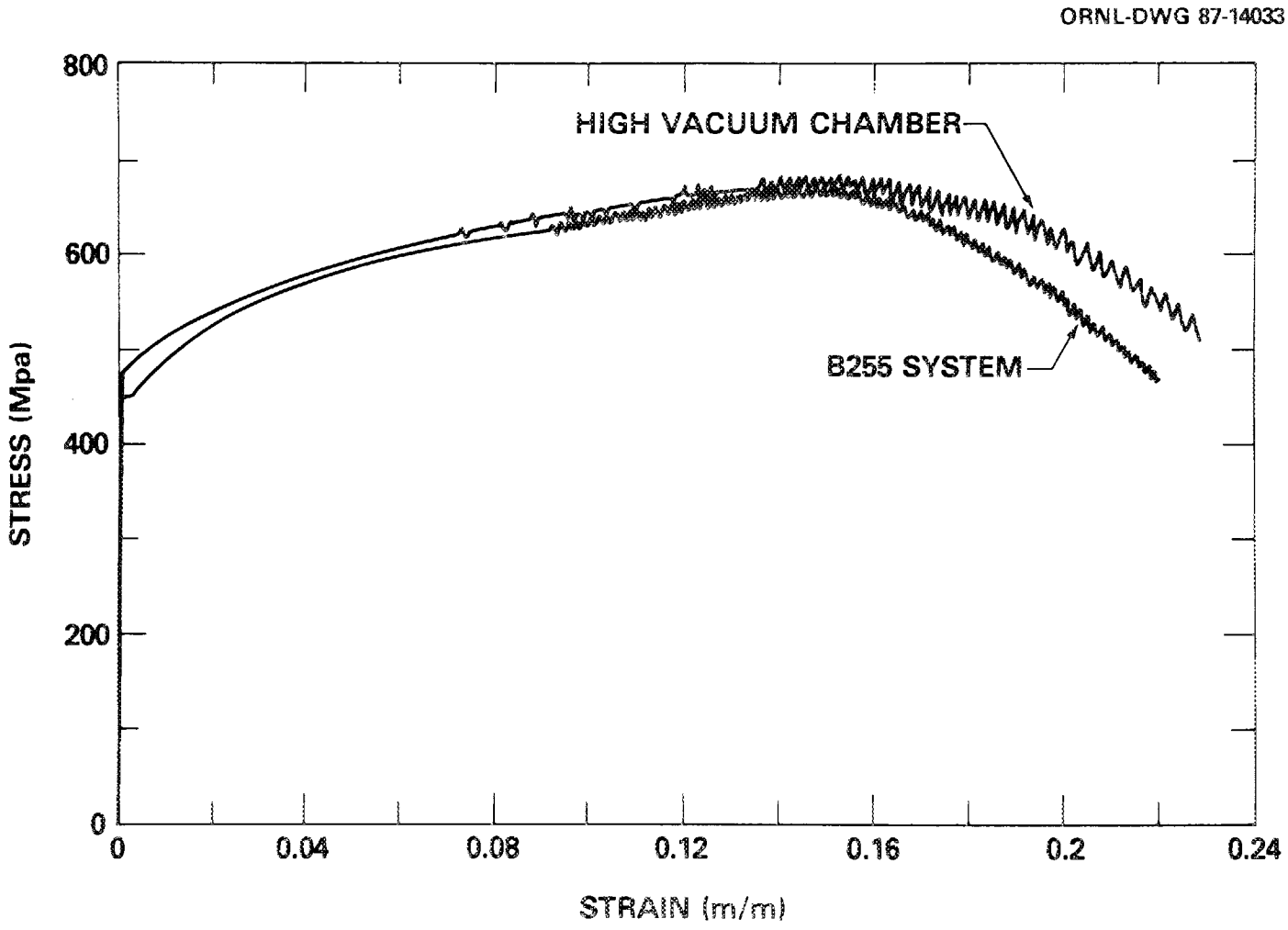

Fig. 10. Stress-strain curve for V-20Ti at 600°C compared with one obtained for the same material on the proven "B255" system.

8. SUMMARY

A high vacuum chamber has been designed and built to interface with an Instron desk top tensile testing machine. The system is required to develop a good vacuum because it will be used to test vanadium alloys in ranges from room temperature to about 800°C. The system utilizes an 20.3-cm (8-in.) cryopump that produces a chamber pressure less than 10^{-4} Pa (10^{-6} torr) within 10 min. The furnace utilizes tungsten elements and nickel heat shields. A V-20Ti vanadium alloy specimen tested in tension at 600°C showed no signs of surface oxidation and exhibited a stress-strain curve that was consistent with those obtained on similar specimens tested in a second, proven system.

ACKNOWLEDGMENTS

The authors thank G. K. Schulze and R. K. Sledd for help in designing and installing the interlocked furnace control system and E. L. Ryan for conducting the tensile tests.

REFERENCE

1. D. N. Braski and D. W. Ramey, "A Modified Tritium Trick Technique for Doping Vanadium Alloys with Helium," pp. 1211-24 in *Effects of Radiation on Materials: 12th Int. Symp.*, ASTM STP 870, F. A. Garner and J. S. Perrin, eds., American Society for Testing Materials, Philadelphia, 1985.

ORNL/TM-10708
Dist. Category UC-423

INTERNAL DISTRIBUTION

1–2. Central Research Library
3. Document Reference Section
4–5. Laboratory Records Department
6. Laboratory Records, ORNL RC
7. ORNL Patent Section
8. J. Bentley
9. E. E. Bloom
10–14. D. N. Braski
15. C. K. H. DuBose
16. M. L. Grossbeck
17. K. Farrell
18–21. J. R. Gibson
22. L. T. Gibson
23. R. L. Klueh
24. Eal Lee
25. P. J. Maziasz
26. L. K. Mansur
27. N. H. Packan
28. N. H. Rouse
29. A. F. Rowcliffe
30. E. L. Ryan
31. J. O. Stiegler
32–36. R. L. Sy
37–39. P. T. Thornton
40–44. L. J. Turner
45. J. R. Weir
46. F. W. Wiffen
47. S. J. Zinkle
48. H. D. Brody (Consultant)
49. G. Y. Chin (Consultant)
50. F. F. Lange (Consultant)
51. W. D. Nix (Consultant)
52. D. P. Pope (Consultant)
53. E. R. Thompson (Consultant)

EXTERNAL DISTRIBUTION

54–55. DOE, OFFICE OF FUSION ENERGY, Washington, DC 20545

G. M. Haas, Chief, ER-533, J-213/GTN
T. C. Reuther, ER-533, J-224/GTN

56. DOE, OAK RIDGE OPERATIONS OFFICE, P.O. Box E, Oak Ridge, TN 37831

Office of Assistant Manager for Energy Research and Development

57–105. DOE, OFFICE OF SCIENTIFIC AND TECHNICAL INFORMATION, P.O. Box 62, Oak Ridge, TN 37831