ornl

ORNL/TM-10791

OAK RIDGE NATIONAL LABORATORY

MARTIN MARIETTA

Assessment of the State of the Art in Machining and Surface Preparation of Ceramics

D. P. Stinton

OAK RIDGE NATIONAL LABORATORY
CENTRAL RESEARCH LIBRARY
CIRCULATION SECTION
4500N ROOM 175
LIBRARY LOAN COPY
DO NOT TRANSFER TO ANOTHER PERSON
If you wish someone else to see this report, send in name with report and the library will arrange a loan.

OPERATED BY
MARTIN MARIETTA ENERGY SYSTEMS, INC.
FOR THE UNITED STATES
DEPARTMENT OF ENERGY

Printed in the United States of America. Available from
National Technical Information Service
U.S. Department of Commerce
5285 Port Royal Road, Springfield, Virginia 22161
NTIS price codes—Printed Copy: A06 Microfiche A01

This report was prepared as an account of work sponsored by an agency of the United States Government. Neither the United States Government nor any agency thereof, nor any of their employees, makes any warranty, express or implied, or assumes any legal liability or responsibility for the accuracy, completeness, or usefulness of any information, apparatus, product, or process disclosed, or represents that its use would not infringe privately owned rights. Reference herein to any specific commercial product, process, or service by trade name, trademark, manufacturer, or otherwise, does not necessarily constitute or imply its endorsement, recommendation, or favoring by the United States Government or any agency thereof. The views and opinions of authors expressed herein do not necessarily state or reflect those of the United States Government or any agency thereof.

ORNL/TM-10791

Metals and Ceramics Division

ASSESSMENT OF THE STATE OF THE ART IN MACHINING AND SURFACE PREPARATION OF CERAMICS

D. P. Stinton

Date Published - November 1988

NOTICE: This document contains information of a preliminary nature. It is subject to revision or correction and therefore does not represent a final report.

Prepared for the
Assistant Secretary for Conservation and Renewable Energy,
Office of Energy Utilization Research,
Energy Conversion and Utilization Technologies (ECUT) Program
EG 05 00 00 0

Prepared by the
OAK RIDGE NATIONAL LABORATORY
Oak Ridge, Tennessee 37831
operated by
MARTIN MARIETTA ENERGY SYSTEMS, INC.
for the
U.S. DEPARTMENT OF ENERGY
under Contract DE-AC05-84OR21400

MARTIN MARIETTA ENERGY SYSTEMS LIBRARIES

3 4456 0283878 5

CONTENTS

	Page
LIST OF FIGURES	v
ABSTRACT	1
INTRODUCTION	1
MACHINING PROCESSES	5
ABRASIVE REMOVAL MECHANISMS	5
ABRASIVE TECHNIQUES	11
Traditional Abrasive Machining	11
Abrasive-Jet Machining	13
Abrasive Waterjet Machining	14
Ultrasonic Abrasive Machining	14
Rotary Ultrasonic Machining	16
Mechano-Chemical Machining	17
NONABRASIVE TECHNIQUES	18
Chemical Machining	18
Electron Beam Machining	18
Electrical Discharge Machining	19
Laser Beam Machining	20
Ion Beam Machining	21
DISCUSSION	23
RECOMMENDED FUTURE WORK	25
ACKNOWLEDGMENTS	26
REFERENCES	27

LIST OF FIGURES

Figure		Page
1	Weibull distribution illustrating the variability in strength for two composites; composite A (m = 3.7) shows much greater variability than composite B (m = 16.1)	4
2	Flow diagram showing that all machining processes use mechanical, chemical, or thermoelectric energy	6
3	Drawing illustrating the plastic deformation that occurs below the contact region during single-point machining of ceramic materials	7
4	SEM photograph showing both the plastic deformation and brittle fracture that occurs during machining of aluminum oxide	8
5	Drawing illustrating climb or down grinding. Note that wheel rotation creates compressive stresses in the workpiece . . .	9
6	Drawing showing median, lateral, and radial cracks that result from machining	10
7	Schematic of abrasive-jet machining process	13
8	Schematic of the ultrasonic abrasive machining process . . .	15
9	Schematic of rotary ultrasonic machining process	16
10	Schematic of the mechano-chemical machining process	17
11	Schematic of the electron beam machining process	19
12	Schematic of electrical discharge machining process	20
13	Schematic of laser beam machining process	21
14	Schematic of the ion beam machining process	22

ASSESSMENT OF THE STATE OF THE ART IN MACHINING AND SURFACE PREPARATION OF CERAMICS*

D. P. Stinton

ABSTRACT

Ceramics are currently being developed for use in high-temperature engineering systems and must be machined to close tolerances for these applications. The high cost and poor reliability of these components has hindered more rapid commercialization of advanced ceramic materials. Unfortunately, machining makes a significant contribution to both the high cost and poor reliability. The contribution is so significant, in fact, that researchers are developing carefully controlled processes to utilize "as-fired" components and avoid machining altogether. Processes that fabricate ceramics to near net shape are also receiving increased attention because of minimal postfabrication machining. Therefore, the topic of machining and surface preparation of advanced ceramic materials was assessed. Abrasive processes, including the commercially used process of traditional diamond grinding, are reviewed. Mechanisms of material removal are described to familiarize the reader with the surface damage created during machining. The more developmental nonabrasive techniques are then described. Finally, recommendations are made for additional areas of research that have significant potential to reduce the cost and increase the reliability of ceramics.

INTRODUCTION

In recent years, advanced ceramics and composites have been introduced into a number of commercial applications. Materials such as silicon carbide, silicon nitride, whisker-reinforced alumina, and transformation-toughened zirconia offer numerous potential advantages over conventional materials because of their unique physical and mechanical properties. Diverse technological applications of ceramic-based materials such as in microelectronics, cutting tools, ceramic armor, turbine blades, heat-engine

*Research sponsored by the Office of Energy Utilization Research, Energy Conversion and Utilization Technologies (ECUT) Program, U.S. Department of Energy, under contract DE-AC05-84OR21400 with Martin Marietta Energy Systems, Inc.

components, and wear parts have been developed because of the materials' chemical inertness, outstanding strength and stiffness at elevated temperature, high strength-to-weight ratio, corrosion resistance, oxidation resistance, wear resistance, and unique electrical properties.

The market for advanced ceramics (electronics, thermistors, gas sensors, cutting tools, structural ceramics, etc.) was estimated to be between $2 billion and $2.5 billion in 1980 in the United States and between $5 billion and $6 billion worldwide.[1] Applications of high-technology ceramics in other areas are expected to expand the market six- to eightfold by the year 2000. Therefore, tremendous commercial interest has been generated in the fabrication of advanced ceramic components.

Two major impediments to more rapid commercialization of advanced ceramic products are their current higher cost and variable performance (reliability).[2-4] Costs are higher because advanced ceramics are usually fabricated by processes that require much more accurate control of the composition, purity, and size of the starting particulates than do conventional processes. Furthermore, the raw materials are quite expensive because the low-volume production has limited competition (i.e., the driving force to reduce costs). In addition, the forming, consolidation, and heat treatment steps require a level of processing science and engineering considerably beyond conventional ceramics. Finally, ceramic components for advanced applications require stringent dimensional tolerances and fine surface finishes because they must be assembled with other ceramic and metallic components. Therefore, machining is an essential step in the fabrication of ceramic components. Machining of theoretically dense, fine-grained materials into components by even the best techniques is very time consuming because of the high hardness of the ceramics. Machining rates are severely limited because extreme care must be taken to avoid excessive stresses that result in brittle fracture of the component. The low rate of material removal (very small depths of cut and low feed rates) required to avoid excessive stresses, of course, translates into a very slow process. Even for the gentlest of processes, significant surface cracks or flaws are created by the machining process. For these reasons machining of ceramics is very costly and often exceeds 75% of the final cost of the component.

Design of components from ceramic materials is very difficult because of the large scatter in the fracture strength from one specimen to another.

Such variability exists in brittle materials because fracture is statistical in nature and is controlled by the Griffith relationship

$$\sigma_f = A(E\gamma/c)^{1/2} ,$$

where

σ_f = fracture stress,

E = elastic modulus,

γ = fracture energy,

c = flaw size,

A = constant (geometry).

This relationship indicates that stresses concentrate at flaws (pores, cracks, inclusions, etc.) in brittle materials and failure is initiated at the most critical, often the largest, flaw present in the volume of material tested. Therefore, components that contain large flaws will have low strengths, whereas components with smaller flaws will be considerably stronger. The careful control of the starting materials and complex process controls that are designed to reduce the size of flaws contribute to the high costs of advanced ceramics.

Design of equipment incorporating ceramic materials is difficult because the design must accommodate the weakest specimen in the distribution or eliminate the weakest specimens by proof testing. Flaws that initiate fracture are created either during the production of the material or during the machining of the material into its final shape. The variation in strengths is best characterized using a Weibull distribution (Fig. 1). Plotting lnln[1/(1-F)] (where F = the probability of failure) versus the ln of the applied stress (typically bend strength) illustrates the variability in strengths. The slope (m) of this line depicts the reliability or predicted reliability of the material or component. Low values (about 5) represent low reliability and high values (about 25) represent much better reliability. Therefore, the size of the flaws created during machining clearly affect the final strength and ultimate usefulness of the component.

Machining processes are, therefore, a major contributor to both the high cost and variable performance of advanced ceramic components because surface flaws or cracks are generated during machining. Machining

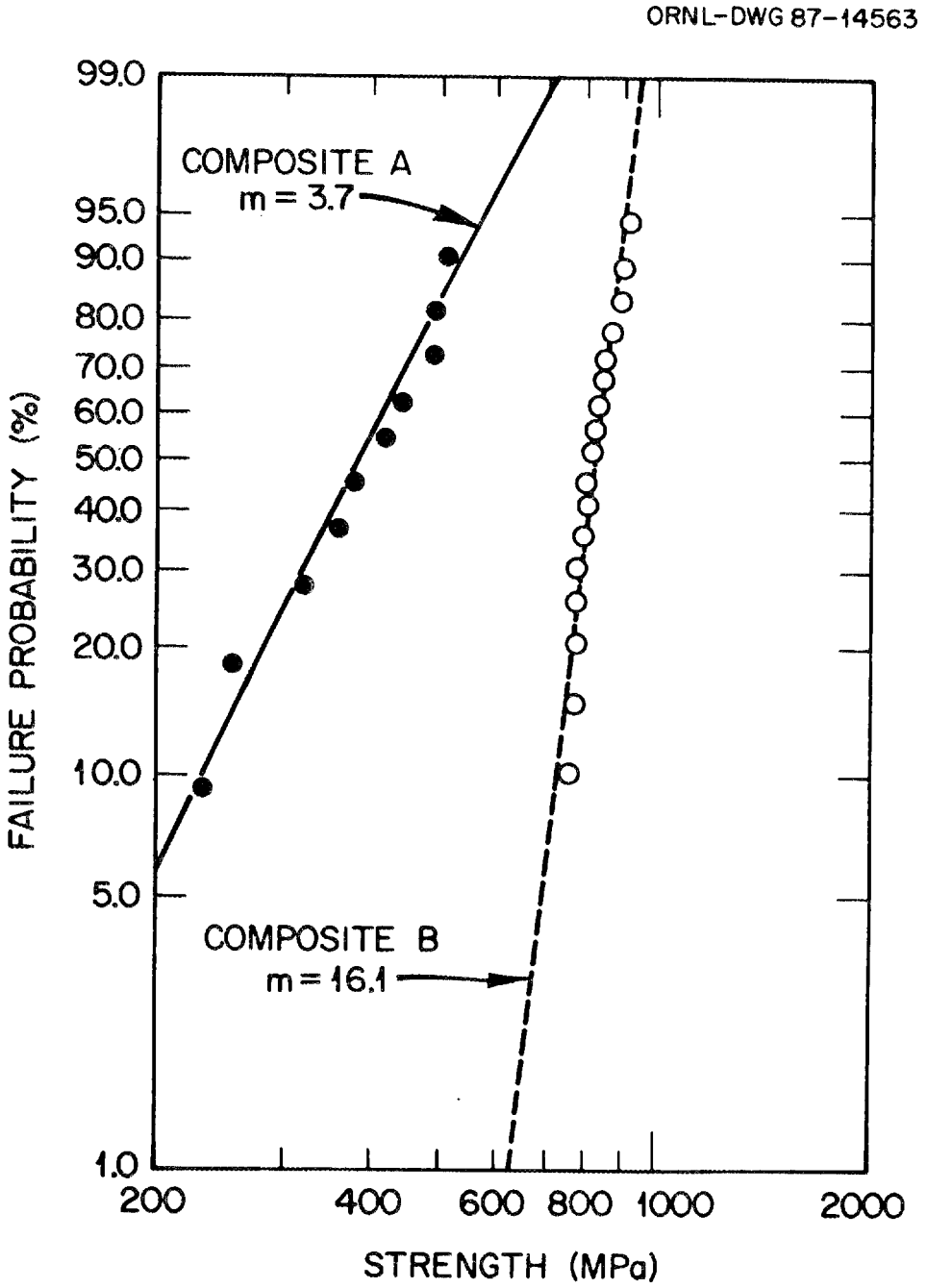

Fig. 1. Weibull distribution illustrating the variability in strength for two composites; composite A (m = 3.7) shows much greater variability than composite B (m = 16.1).

processes must be improved to develop cost-effective and production-viable processes. Research in the area of machining of ceramics offers tremendous potential to reduce costs, improve reliability, and make advanced ceramics practical for many engineering applications.

The purpose of this report is to conduct a preliminary assessment of ceramic machining and surface preparation and identify areas needing additional development. Ceramic components can be machined by processes using mechanical, chemical, and thermoelectric energy (Fig. 2).[5] Unfortunately, the machining of ceramics by any technique is difficult because of the same properties that make them attractive for advanced applications (high hardness, high thermal resistance, chemical inertness, poor thermal and electrical conductivity). Mechanical (abrasive) processes that are widely accepted as the most economical way to machine ceramics are described first. Next, the nonabrasive techniques using chemical and thermoelectric energy are described. Nonabrasive techniques are infrequently used in current practice but are being improved to increase the material removal rates, improve the surface finish achievable, and reduce the capital equipment costs to make the processes commercially attractive. Finally, this report identifies potential areas for additional research and development to advance the science of ceramic machining.

MACHINING PROCESSES

ABRASIVE REMOVAL MECHANISMS

Ceramic materials can be machined by numerous processes; however, abrasive removal or diamond grinding is by far the most frequently used. The mechanisms of material removal during diamond grinding will be described first to help the reader understand the problems associated with abrasive processes. Single-point grinding has been studied in great detail to identify the mechanisms of material removal.[6-15] When a groove is machined at a low speed (less than 1 mm/s) by a single-point diamond, material displacement occurs by two modes. In the contact region between the material and the single abrasive point, considerable plastic deformation (Fig. 3) occurs because of the high stress and the elevated temperatures that are created. The temperature of the machined chips in

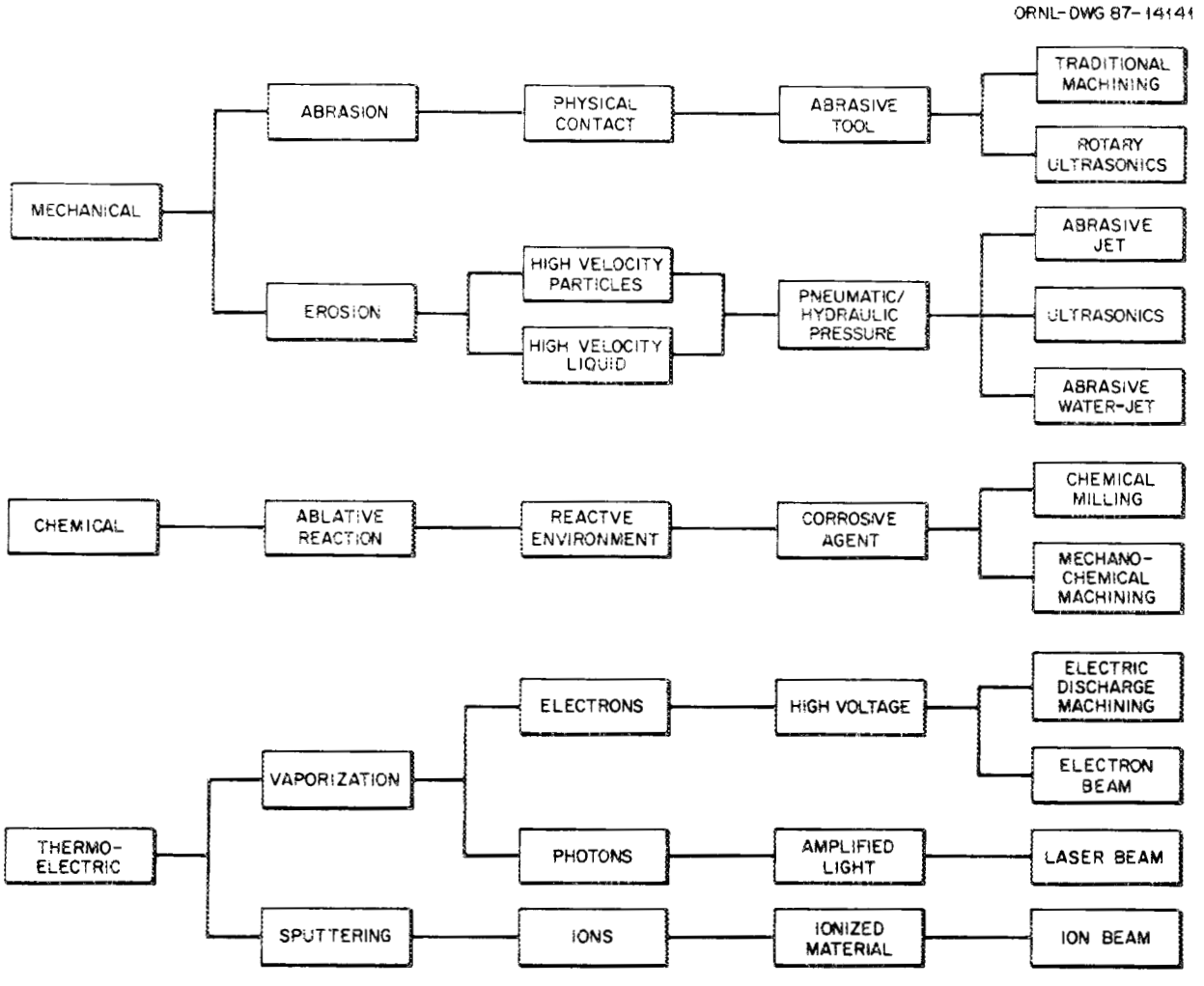

Fig. 2. Flow diagram showing that all machining processes use mechanical, chemical, or thermoelectric energy.

ORNL-DWG 87-10691

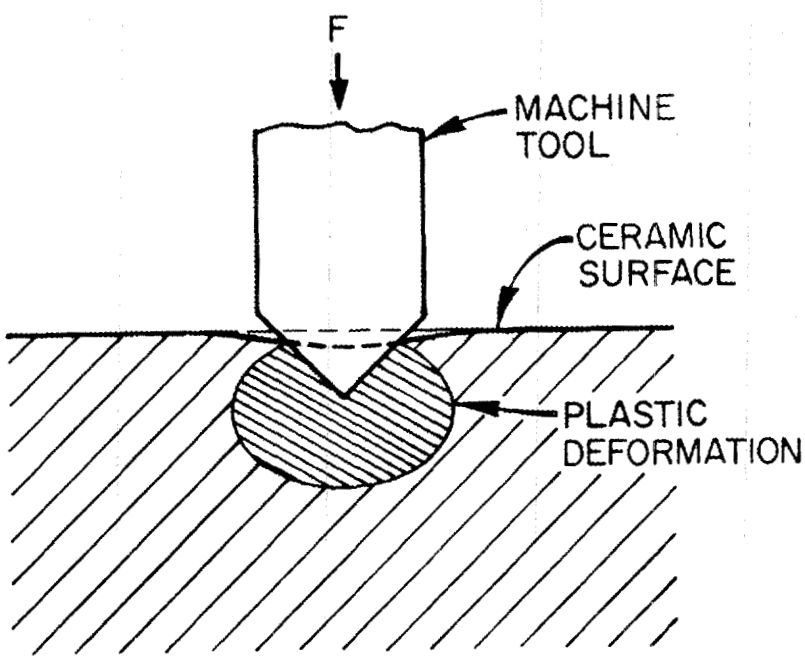

Fig. 3. Drawing illustrating the plastic deformation that occurs below the contact region during single-point machining of ceramic materials.

dense Si_3N_4 and Al_2O_3 is estimated to exceed 1200°C. Temperatures at the abrasive point/substrate interface are slightly less but still very high.

The dominant mechanism of material removal during diamond grinding, however, is brittle fracture. Careful observation of the brittle fracture during single-point grinding shows that many chips are removed in front of the point by brittle fracture. Surprisingly, a substantial number of chips are also removed behind the abrasive point. These chips result from the tensile stresses generated during the relaxation of the high compressive stresses in the plastically deformed regions in the wake of the cutting point. Both transgranular and intragranular fracture occur as these chips separate from the workpiece. In Fig. 4 note the plastic deformation that occurs within the machined groove and the brittle fracture that occurs along the groove. Similar behavior occurs with multiple-point abrasive material removal during grinding and cutting operations.

Abrasive wheels for the machining of advanced ceramics are fabricated with resin, metal, or vitrified or electroplated bonds depending on the specific application.[3,16,17] Considerable research is currently ongoing at

SS-88-233

Fig. 4. SEM photograph showing both the plastic deformation and brittle fracture that occurs during machining of aluminum oxide.

many locations to optimize the bond type, diamond type, diamond size, and concentration for rapid material removal with a minimum of surface damage. Coolant/lubricants are required when using abrasive wheels to cool both the wheel and the workpiece. Resin-bonded wheels are somewhat resilient and absorb some of the vibration present in the grinding zone. Metal forms a very strong bond with the abrasive and thereby extends the life of the wheel because it retains its shape better than resin bonds. Vitrified bonded wheels are more porous than resin or metal wheels and entrain more coolant/lubricant within the grinding wheel. Electroplated products have a thin layer of diamond particles bonded to a steel preform but are infrequently used for ceramics. Contact of the coolant/lubricant solutions with the ceramics at high temperatures creates the possibility of interaction. Such chemical effects have received little attention to date.

Climb or down grinding (Fig. 5) is the best way to machine ceramics without causing large catastrophic fractures. The workpiece is moved in the same direction as the rotating wheel so that the ground material is in

ORNL-DWG 87-10693R

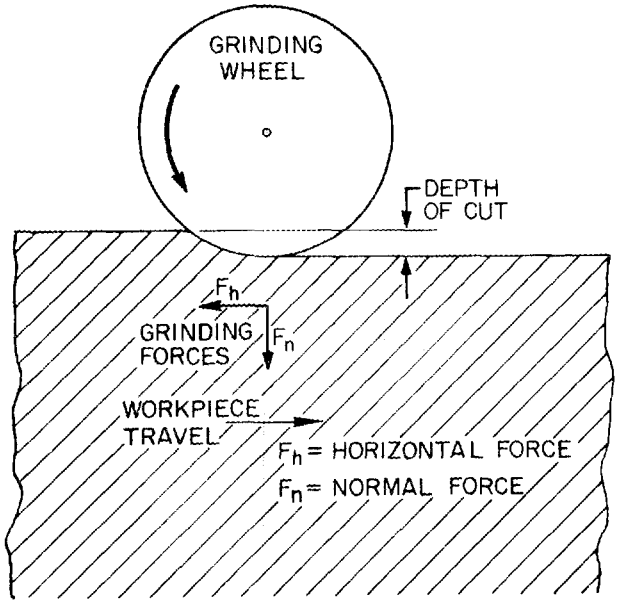

Fig. 5. Drawing illustrating climb or down grinding. Note that wheel rotation creates compressive stresses in the workpiece.

compression. For hard ceramics, the vertical grinding force is considerably greater than the horizontal grinding force. Diamond wheels appear to remove material by plastic deformation and by brittle fracture just like single point diamonds. Grinding results in considerable heat generated at the diamond/workpiece interface. Use of coolant/lubricants during machining normally reduces the grinding forces and the resulting temperature of the chip considerably.

Normal machining operations create considerable damage in the form of surface cracks in the ceramics.[18-24] A vertical crack originates directly below the plastically deformed region, as shown in Fig. 6. This crack, referred to as a median crack, runs parallel to the machining groove and perpendicular to the surface. The severity of median cracks are a function of both the applied load and the speed of the scratch. A second type of crack of somewhat less significance than median cracks is located parallel to the surface and extends away from the plastic zone (Fig. 6). These cracks, referred to as lateral cracks, initiate because of tensile stresses generated at the interface of the elastically deformed region and the plastically deformed region. Because lateral cracks are parallel to the

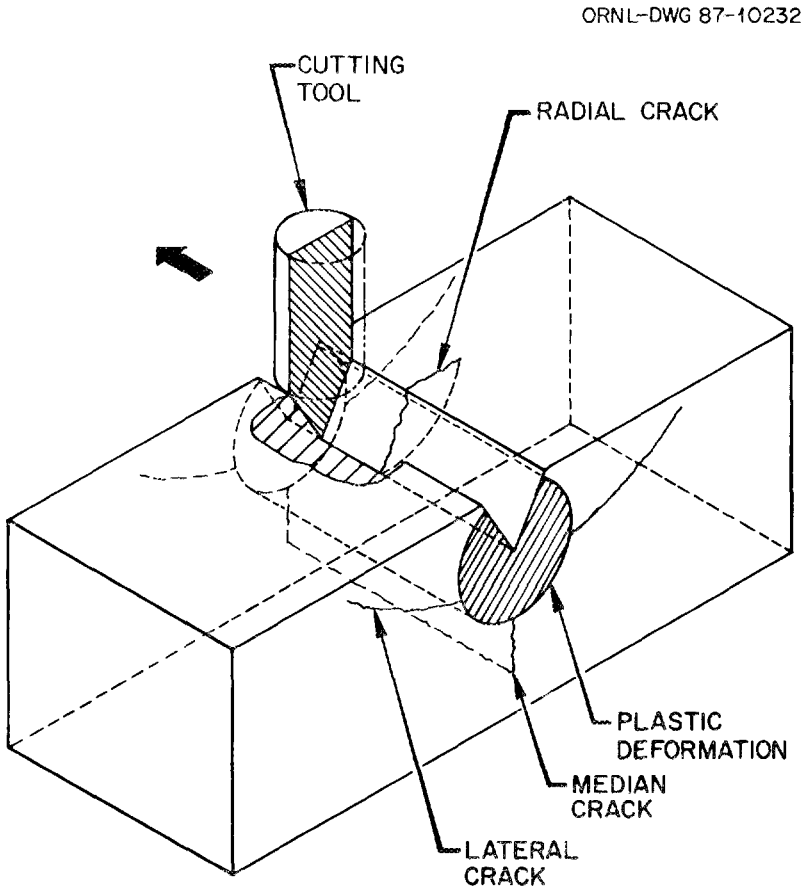

Fig. 6. Drawing showing median, lateral, and radial cracks that result from machining.

surface, they frequently curve toward the surface, resulting in chips that spall (fracture present in Fig. 4). As described previously, these spalled chips account for a significant fraction of the material removed by machining. The final type of cracks, referred to as radial cracks, are initiated at numerous points along the length of the grinding groove (Fig. 6). Radial cracks run perpendicular to the length of the grinding groove and are perpendicular to the sample surface. It is believed that they result from high tensile stresses that exist at the trailing edge of the point contact.

The damage caused by machining operations may significantly affect the strength of the ceramic, depending on its microstructure.[25-32] Very dense fine-grained ceramics require high grinding forces and long times to machine. The strengths of these types of ceramics, which are normally

quite high, degrade considerably during machining because the flaws created by machining are often larger than preexisting processing flaws in the material.[33,34] Coarse-grained material with uniformly distributed porosity is much less susceptable to strength degradation due to machining because the size of the flaws created by machining are comparable to or smaller than existing flaws in the material. Composite materials toughened by the addition of dispersed phases, whiskers, or continuous fibers are also less susceptible to strength degradation by machining than dense fine-grained ceramics. The mechanisms that toughen the composites also act to reduce the severity of the cracks caused by machining.

The orientation of the grinding operation also has a significant effect on strength.[25-29,32] As described previously, the strength of the ceramic is controlled by the size of the flaws within the tensile portion of a test specimen. Stress concentrates at the tips of cracks that are oriented perpendicular to the stress axis. Therefore, stresses concentrate at radial cracks for specimens ground in a longitudinal direction (parallel to the length of a flexure bar). For specimens ground in a transverse direction (perpendicular to the length of a flexure bar), stress concentrates at median cracks. Because median cracks are much more severe, transverse grinding will result in significantly more strength reduction than longitudinal grinding. As will be described later, postmachining treatments that could repair or reduce surface damage would be of significant benefit and are being investigated.

Now that the mechanisms for material removal have been defined, the specific techniques for machining of ceramics will be described. During the discussion of each technique, it is useful to visualize the extent of the damage that is created at the machined surface.

ABRASIVE TECHNIQUES

Traditional Abrasive Machining

Machining of ceramics with abrasive wheels requires precision machines very different from those designed for machining conventional construction materials of this century, such as steels, nonferrous metals, and various plastics.[22,35] Machines for grinding ceramics must be exceptionally stiff so that infeeding the tool results in increased chip removal and not

flexure of the machine. Submicrometer tolerances required for many advanced ceramics would also be impossible to achieve with conventional lathes because the high normal forces that result when machining hard ceramics cause severe vibration and tool fixture deflection.

Requirements of machine tools for advanced ceramics include submicrometer control of the tool infeed with respect to the workpiece. These machines must accommodate thermal drift, vibrations, and spindle runout and have a high degree of static and dynamic stiffness resulting from specially designed spindles, bearings, and work support structure. Grinding wheels must be carefully balanced to avoid vibration resulting from wheel rotation.[3,36] In addition, abrasive wheels must be precisely trued for accurate geometric shape of the wheel face and properly dressed to expose the abrasive grit for efficient grinding.[16,17,37,38] Finally, the abrasive nature of the machined chips requires a sophisticated system to remove the chips from the recirculating coolant.

Traditional abrasive machining consists of a sequence of grinding steps of decreasing severity to remove material from the workpiece.[39-44] First, a rough grinding step (high normal force) forms the material into the shape of interest but leaves the surface severely damaged. Coarse diamond wheels (100 to 150 μm diam abrasive) are used to remove material at about 25 μm/pass during rough grinding.[45] The resulting cracks often extend 100 μm into the workpiece. Greater downfeed rates are impractical because the machine stalls when the infeed rate exceeds the material removal rate or the depth of damage created becomes so great that it could not be removed by subsequent steps.[37,46] Finish grinding with fine abrasives (325 μm diam abrasive) is then performed to obtain smooth surfaces with the desired tolerances. The subsurface damage created by finish machining (about 10 μm) is considerably less than the damage produced by coarse abrasive wheels. Lapping or polishing of the part is finally performed to obtain the desired surface finish and minimize the subsurface damage (3 to 5 μm). Each step of an optimized machining operation is designed to rapidly remove the damage introduced by the previous step. A normal machining operation consists of from three to five steps. Unfortunately, abrasive machining techniques are empirically determined and highly dependent on the operator.[47,48] Very fine surface finishes are often difficult to obtain because of pullout of individual

grains during polishing or lapping. Pullout of grains occurs in ceramics because of their brittle nature and the different cohesive strengths of grain boundary regions as compared to the grains themselves.

Complex shapes such as threads or curves are normally machined using carefully contoured diamond wheels. An almost limitless number of contoured wheels for special shapes are available from the manufacturers of abrasive wheels.

Abrasive-Jet Machining

Several types of erosive techniques have been used for cutting or drilling of hard materials that use a directed stream of abrasive particles at high velocity.[5,10,49] Specially designed abrasive-jet nozzles combine compressed gases (0.55 to 0.69 MPa) with SiC or Al_2O_3 abrasive particles (25 to 50 μm diam) and transfer the momentum of the compressed gas to the abrasive particles. Very fine nozzle orifices are able to collimate the abrasive particles into a stream about 125 to 250 μm in diameter for cutting or drilling. Cutting rates are controlled by the abrasive parameters (size and hardness), standoff distance, and abrasive feed rate (up to 10 g/min). Because the abrasive particles are well collimated near the orifice, precise cuts or holes are produced only at minimum standoff distances (Fig. 7).

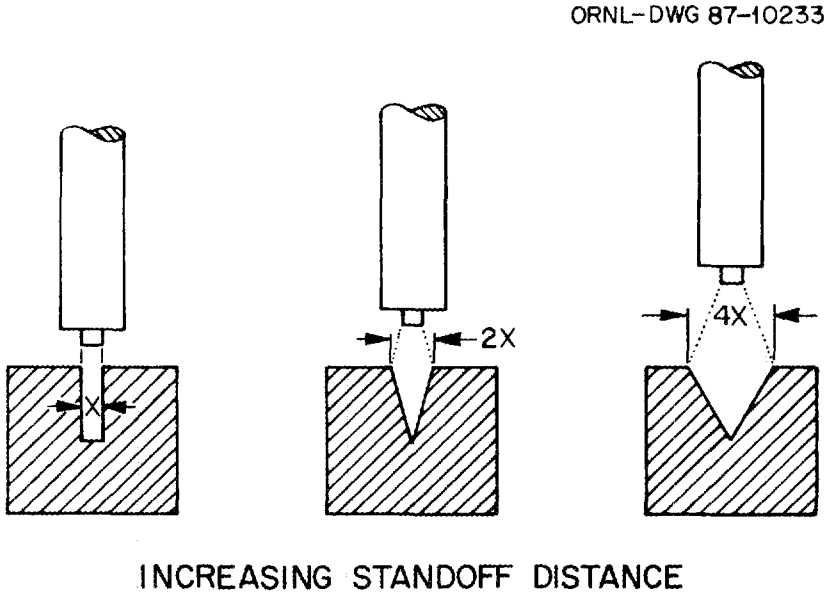

Fig. 7. Schematic of abrasive-jet machining process.

The primary advantages of abrasive-jet machining include no degradation of the cutting tool; no thermal stresses generated; and, because of the low forces generated, very little damage to the material surface. Therefore, applications of this technique include the cutting of thin (to minimize the standoff distance), very fragile, or heat sensitive materials where other techniques failed because of extensive thermal shock damage. The primary disadvantage of this technique is the lack of close tolerance at higher standoff distances (nonuniform surface), which prevents its use in applications other than cutting or drilling of small thicknesses. A second disadvantage is nozzle erosion because that affects the tolerances that can be obtained and the economics of the process.

Abrasive Waterjet Machining

A variation of abrasive-jet machining substitutes a high pressure waterjet for the stream of compressed gases.[5,10,50-53] Water is pressurized to 175 to 380 MPa and combined in a special nozzle with abrasive particles. The collimated particles exit the nozzle at high velocity and remove material from the workpiece by erosion and shearing action. The cutting rates are controlled by the abrasive feed rates, standoff distance, waterjet pressure, and abrasive parameters (size and hardness). Advantages of this technique are the same as abrasive-jet machining (no degradation of the cutting tool, no thermal stresses generated, and low forces generated in the workpiece). The technique is limited to cutting thin sheets or drilling very shallow holes because the abrasives fan out as the standoff distance increases, which results in rather rough surfaces. Because of this limitation, abrasive-jet machining and abrasive waterjet machining are rarely used for the fabrication of ceramic components.

Ultrasonic Abrasive Machining

Ultrasonic abrasive machining is a more widely used technique for the fabrication of ceramic components because of the increased machining rates and improved surface finishes.[54,55] The cutting tool is ultrasonically vibrated up and down (no rotary action) while a slurry of abrasive particles (normally boron carbide, silicon carbide, or alumina) is pumped between the tool and the workpiece (Fig. 8). The abrasive particles are accelerated thousands of times per second against the workpiece by the

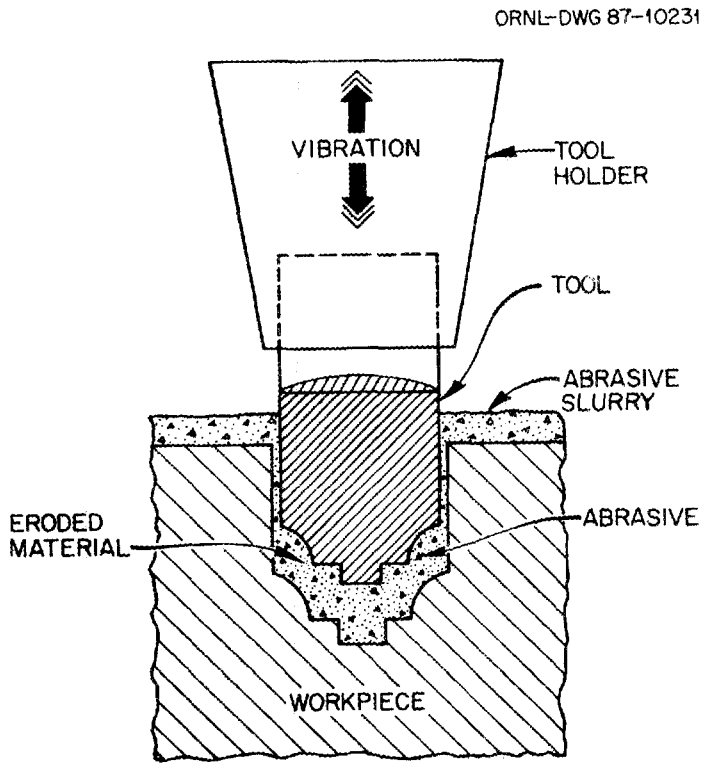

Fig. 8. Schematic of the ultrasonic abrasive machining process.

ultrasonic vibration. Therefore, machining occurs within regions where the workpiece and tool are in close proximity. The abrasive particles erode the material, and the workpiece takes on the exact form of the tool. Cutting tools are fairly inexpensive because they are made of soft materials like brass or bronze that, because of their ductility, are not cut by the abrasive. Very hard tools are unacceptable because they would fracture the abrasive particles on impact. As abrasive particles become impregnated into the soft material, the efficiency of the cutting tool increases. Because no pressure is directly applied from the tool to the workpiece, the grinding force rarely exceeds 0.1 MPa. The low force and cool abrasive slurry prevent significant thermal and mechanical stresses from building up in the material. Ultrasonic abrasive machining is ideally suited for drilling irregularly shaped holes or cavities because the tool can be fabricated to the exact shape of the cavity. This technique produces minimal tool wear and very tight tolerances and smooth surfaces. The gentle grinding forces that are used result in very little strength-limiting damage to the surface of the workpiece.

Rotary Ultrasonic Machining

Ultrasonic vibration is also being used in another machining technique. In this technique, a rotating diamond tool is ultrasonically vibrated at about 20 kHz during machining (Fig. 9).[54,56,57] The numerous advantages of this technique include much faster machining rates, superior surface finishes, and very light tool pressures. Ultrasonic vibration of the coolant provides benefits such as a cleaning action of the tool to eliminate binding and loading of the diamond matrix. The low pressures used minimize chipping and damage to the surfaces being machined and make it possible to drill very straight deep holes and adjacent holes or grooves with very thin dividing walls. Sonically drilled holes are perfectly round and very smooth because of the rotary action of the tool. Rotary ultrasonic machining can be used to drill holes with diameters varying from 250 μm to 0.04 m. Drill bits for holes from 250 μm to about 900 μm are normally solid wires, whereas the larger holes are made with a core drill.

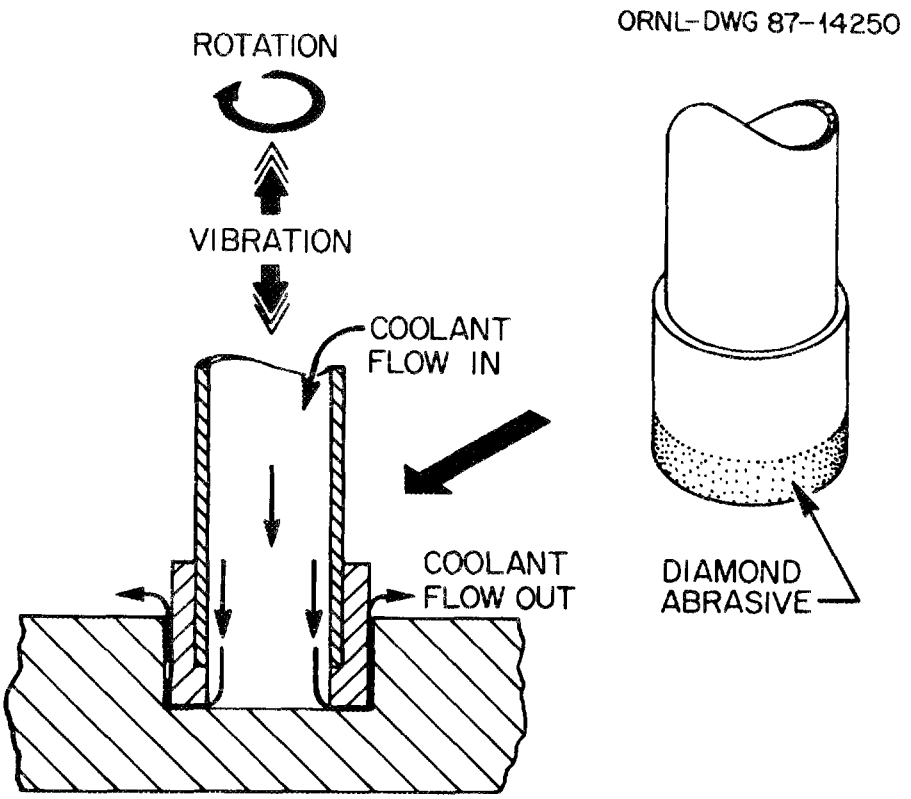

Fig. 9. Schematic of rotary ultrasonic machining process.

Cooling water is forced through the center of the core drill to prevent core jamming. The low pressures and clean cuts produced by this technique are ideal for ceramic composites because the gentle action prevents delamination of the fibers and the matrix. The length-to-diameter ratio of holes drilled by this technique can be very high (300:1) compared to other techniques.

Mechano-Chemical Machining

Mechano-chemical machining is a very gentle abrasive technique used primarily in the electronics field to polish or lap a workpiece.[58-60] A soft abrasive material that normally would not scratch or damage the workpiece is used to polish a much harder, brittle material. However, in mechano-chemical polishing the abrasive material is carefully selected to react with the workpiece and form a reaction product on surface asperities of the workpiece (Fig. 10). The very thin reaction product (100 Å) is then abraded because it is poorly bonded to the workpiece or possesses a reduced hardness. Materials polished by this mechano-chemical technique include sapphire by SiO_2; silicon nitride by Fe_2O_3; SiC by $SrCO_3$ or MgO; and B_4C by $SrCO_3$, NiO, Fe_2O_3, or SiO_2. The polishing rate can be increased by

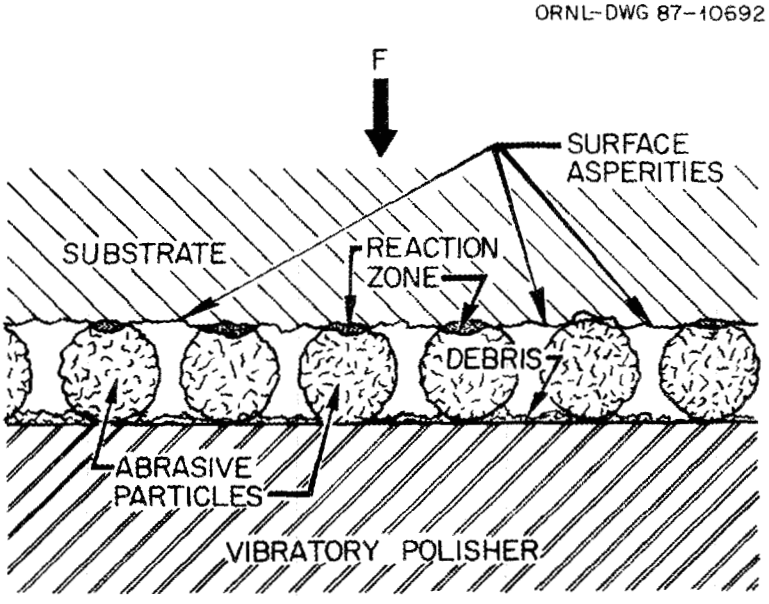

Fig. 10. Schematic of the mechano-chemical machining process.

polishing dry to generate higher temperatures. However, increased normal forces are usually preferred to increase the temperature because the amounts of edge chipping and cracking are reduced.

NONABRASIVE TECHNIQUES

Chemical Machining

Chemical machining is a technique to very gently remove or dissolve material from the surface of a glass or ceramic.[5,10,61,62] A chemical reagent is selected (HF for silicate glasses or molten $Na_2B_4O_7$ for Al_2O_3) that will dissolve the workpiece in a controlled and uniform manner. Masks are used to protect areas from the reagent, and dissolution occurs in unmasked regions. The technique is limited to very thin specimens because the reaction undercuts the mask. Chemical milling of glass specimens under appropriate conditions removes surface flaws and improves the surface finish and strength of the specimen. Chemical milling is rarely used for ceramics because reagents that uniformly dissolve polycrystalline ceramics at low temperatures are not available.

Electron Beam Machining

Electron beam machining is a thermal process that removes material by melting and vaporization.[10,63,64] Material is heated by focusing a beam of electrons (energy density of 105 to 106 W/mm^2) on the point of interest (Fig. 11). Advantages of this process include the small size of the electron beam and the speed and ease with which the beam can be positioned (electrical control of magnetic fields). The process is ideal for drilling small, deep holes in very hard materials because the hardness has no effect on material removal rates. Careful control of the electron beam allows the drilling of cylindrical holes, holes with tapered walls, or holes at any angle to the workpiece. Because electron beam machining is a thermal process, microcracks and highly stressed regions are created in the thermally affected region. Samples machined by this technique will experience significant strength reduction because of the damage to the surface.

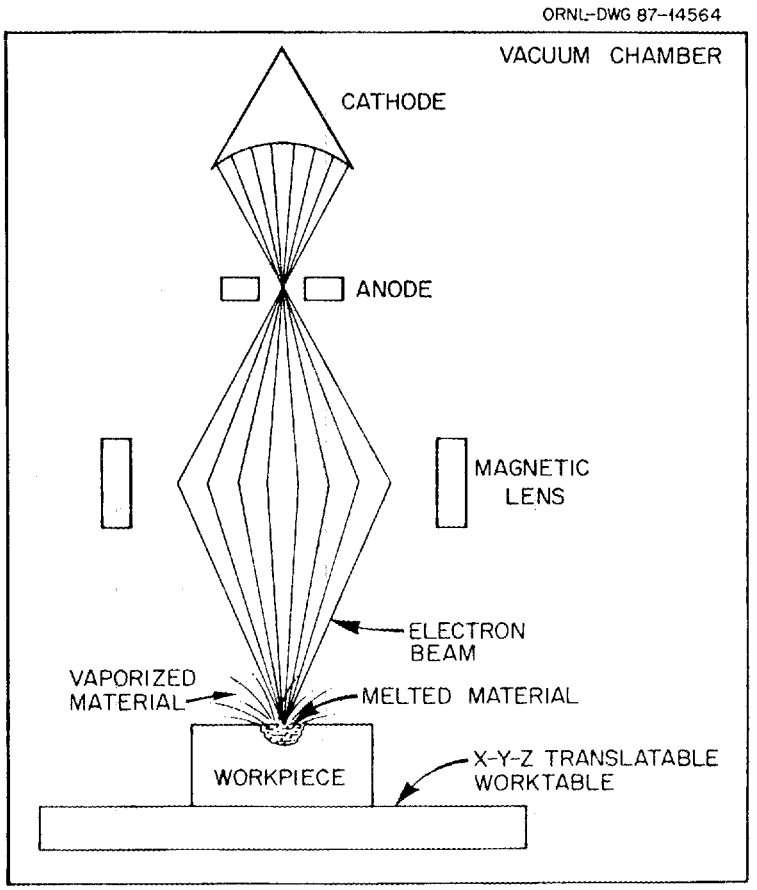

Fig. 11. Schematic of the electron beam machining process.

Electrical Discharge Machining

During electrical discharge machining, an electric arc between an electrode (cutting tool) and workpiece generates very high temperatures that melt or vaporize material in close proximity to the arc.[5,10,65,66] This process is controlled so that many small arcs are produced across a dielectric fluid between a workpiece and the tooling (Fig. 12). Machining continues until the workpiece takes the form of the three-dimensional reverse image of the tool. Cutting tools are very inexpensive because they are made of soft conductive materials like graphite. Only electrically conductive materials like certain carbides, silicides, borides, and nitrides can be machined by this technique. No mechanical loads are used in this process; however, the surface of the material is degraded considerably by residual stresses and microcracks that result from the resolidification of melted material. The damage in the thermally

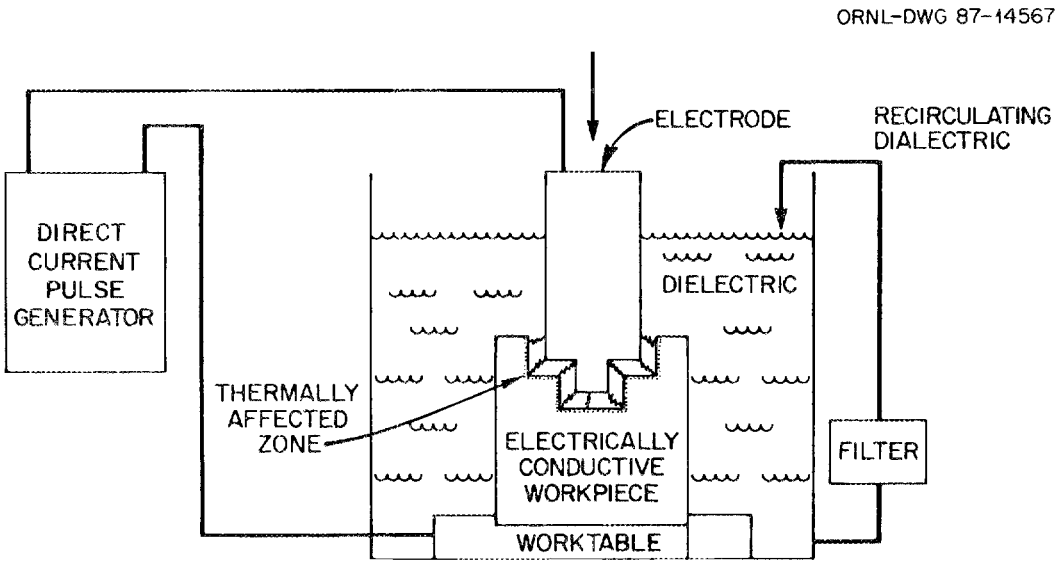

Fig. 12. Schematic of electrical discharge machining process.

affected zone is responsible for severe strength reduction that often exceeds 50%. A second disadvantage is the rather low rate of material removal. Electrical discharge machining is routinely used for metals and for the few electrically conductive ceramics as well as for ceramic composites containing an electrically conductive phase. In fact, ceramic composites are now being designed to contain electrically conductive phases to use electrical discharge machining to fabricate components.

Laser Beam Machining

Laser machining is a third process that uses thermal energy to remove material by melting or vaporization.[67-75] Laser energy is focused on a workpiece to melt or evaporate material at the focal point. High-pressure gas jets blow the melted material away from the groove or hole being machined (Fig. 13). Two types of lasers (CO_2 or Nd-YAG) are routinely used for machining because of their high power levels. Advantages of laser machining include the elimination of tool wear because it is a noncontact method. Because lasers create no cutting forces, machine tool deflections, fixturing, vibrations, and stiffness requirements are not a problem. Laser machining has the capability to drill, cut, thread, or groove a wide range of materials because the hardness has no effect on machining rates.

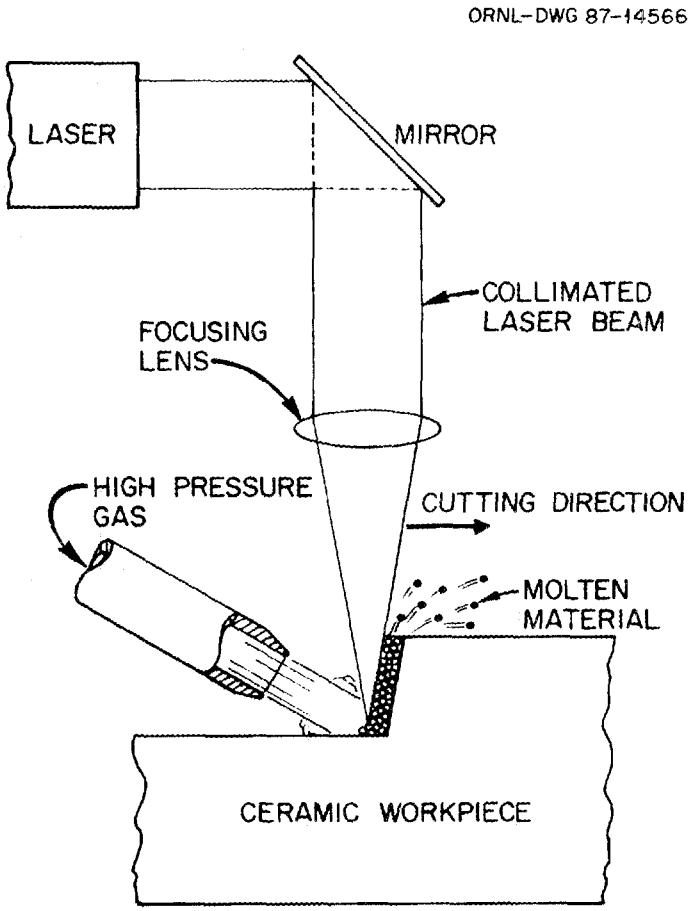

Fig. 13. Schematic of laser beam machining process.

However, laser machining is an inefficient technique because a large amount of energy is required to remove a specific volume of material. Positioning of the laser beam is slower and less precise than ion beams or electron beams because it requires a mechanical process to align the mirrors. Thermal stresses generated are small because the laser heats only a small volume of material; however, thermally affected regions are still created. Therefore, mechanical strengths of laser-machined specimens would be expected to be somewhat lower than abrasively machined specimens. It has been observed, however, that the Weibull modulus of abrasively machined Si_3N_4 specimens increased after laser machining, although strength decreased.[76]

Ion Beam Machining

Ion beam machining produces the least amount of damage to the workpiece of all the techniques described because material is removed one

atom at a time.[5,77-81] Energy from an incident beam of ions is transferred to surface atoms that are ejected from the surface (Fig. 14). Movement of the ion beam is rapid and quite simple because electrical control of a magnetic field moves the beam from one location to another. Unfortunately, ion beam machining is also the slowest of all the techniques described. However, the strength of specimens machined by this technique will normally be greater than a specimen machined by an abrasive technique. Because there is minimal surface damage, the strength of the material is then

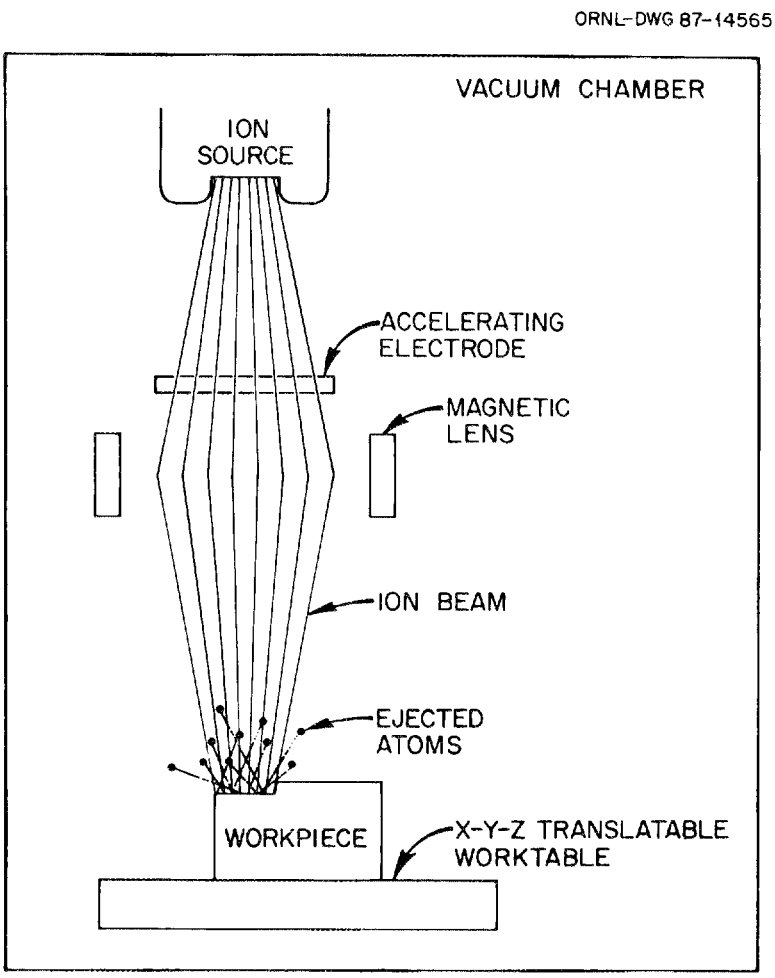

Fig. 14. Schematic of the ion beam machining process.

controlled by processing defects like large pores or inclusions. Ion beam machining is often used for producing semiconductor devices and the precision polishing of optical components (lenses). Ion beam processes are ideal because they produce a surface free of residual stresses with a depth tolerance of 1 nm.

DISCUSSION

Review of the literature identified at least eleven different techniques for the machining of ceramics. Unfortunately, it is not clear from the review which of these techniques are most economical for a specific material and are used commercially. Therefore, manufacturers of ceramic components and machining specialists such as Norton, Norton/TRW, Sohio, Coors, GTE, Ceramatec, Cummins Engine Company, Ellis Ceramtek, Insaco Inc., and many others were contacted to determine which techniques were used in the production of their products. Their unanimous response was that diamond machining was the only technique of significant commercial interest. However, they felt that current machining processes must be improved before ceramics could become a cost-effective alternative to existing materials.

Programs are under way or being planned at these companies to increase material removal rates, reduce the surface damage, and therefore reduce the cost of processes used for diamond machining of ceramics. Researchers at Norton Company are attempting to obtain a better understanding of the grinding process so that the surface damage and residual stresses could be minimized.[82] In addition, programs are under way at many locations to determine an abrasive size, matrix material, and abrasive concentration for increased grinding rates that also reduce the damage created at the surface of the ceramic.[82-86] There is also considerable interest in identifying potential postmachining treatments that could be used to repair or heal the surface damage created during machining.[87] Treatments such as annealing, oxidation, laser glazing, or etching are being investigated. There is also renewed interest in the machining of ceramics by electrical discharge machining.[88] Numerous composites are being developed that contain an electrically conductive phase that allows them to be machined by electrical discharge machining. This technique offers the potential of greatly

increased machining rates and, with further development, could increase the reliability of machined ceramics.[88] Potential reactions at elevated temperatures between diamond tools and ceramic substrates, particularly SiC and Si_3N_4, are suspected by various researchers. An investigation of special lubricants to prevent or reduce reaction was also of limited interest.[89,90]

Further investigation of the alternative techniques revealed a better understanding of the limitations of each of the techniques. Abrasive-jet machining and abrasive waterjet machining can be used for cutting or drilling very thin, thermally sensitive materials. However, these techniques cannot be used for the machining of flat or contoured surfaces because close tolerances cannot be maintained. Ultrasonic abrasive machining and rotary ultrasonic machining offer significant potential because of increased machining rates and reduced grinding stresses (surface damage). Unfortunately, the techniques are only occasionally used for drilling deep holes or for special applications because commercial equipment is just currently being marketed.

Mechano-chemical machining is rarely used outside the electronics industry because the material removal rates are slow and because soft abrasives that react with certain advanced ceramics have not been identified. Chemical machining is rarely used for the machining of advanced ceramics because of inadequate tolerances and because reagents that uniformly dissolve advanced ceramics at low temperatures are not available. Electron beam and ion beam processes are not of commercial interest because the material removal rates are very low and machining complicated shapes has not been demonstrated. Electrical discharge machining is a commercial process but only applicable to conductive materials and, therefore, not to advanced ceramics such as SiC, Si_3N_4, and whisker-toughened Al_2O_3.

For the previously described reasons and the lack of experience with recently developed techniques, commercial machining of advanced ceramics is performed by diamond machining. Unfortunately, current diamond-machining practices contribute to the high cost and poor reliability of ceramics. These processes must be improved to reduce the costs and eliminate much of the surface damage created by machining. Ceramics manufacturers are funding research in the area of diamond machining; however, additional

research in the area of diamond machining as well as other techniques may offer tremendous potential for reducing costs, improving reliability, and making advanced ceramics practical for many engineering applications.

RECOMMENDED FUTURE WORK

The following research areas are suggested for future research and development to advance the science of ceramic machining and surface finishing.

1. A systematic study of various postmachining treatments on a wide variety of materials could potentially identify a treatment or treatments that could repair or heal the surface damage created during machining. This damage is extremely important because it is responsible for the drastic strength reduction that is experienced after machining advanced fine-grained ceramics. Treatments such as annealing, oxidation, laser glazing, etching, ion implantation, controlled corrosion, and various others should be investigated.

2. Normally, ceramics cannot be machined by electrical discharge machining because they are nonconductive. However, many composites are being developed today that incorporate sufficient quantities of conductive phases (TiC, TiN, etc.) to make them conductive and, therefore, machinable by electrical discharge machining. Traditional electrical discharge machining processes cause surface pitting and corrosion, which results in residual stresses and severe strength reduction. Equipment used for electrical discharge machining processes should be redesigned to optimize the process for ceramics (minimize the resulting surface damage). If the thousands of existing electrical discharge machining machines could be retrofitted with improved components, machining of conductive ceramics could be significantly improved in a short time.

3. A study to identify ways that industry could better utilize advanced machining techniques, particularly ultrasonic methods, should be initiated. Ultrasonics offers the advantage of reduced normal grinding force and increased grinding rates and, therefore, has the potential to reduce the damage caused during machining.

4. A basic study to investigate interactions between the diamond tools and the ceramic workpieces, particularly silicon carbide and silicon nitride, could identify mechanisms causing rapid tool wear. The elevated temperature resulting from grinding operations accelerates reactions that cause wear of the diamond tools. Special lubricants might be developed that could prevent unwanted reactions and significantly increase the life of the diamond wheels.

5. A systematic study of techniques to machine ceramics in the unfired state could be beneficial. Green ceramics should be easier to machine because of their reduced hardness. Unfortunately, the abrasive nature of the particulates causes significant wear to nondiamond tools and soft green ceramics are frequently damaged by the mechanical equipment used to hold the part during machining.

6. A study to determine the effect of laser machining on the mechanical properties of ceramics is needed. It has been reported that laser machining causes some strength degradation but, more importantly, increases the reliability of ceramics.

7. Development of processes that fabricate ceramics to near net shape should be supported because the amount of diamond machining is thus minimized.

ACKNOWLEDGMENTS

The author appreciates the efforts of J. A. Hanigofsky for performing the literature search, P. F. Becher and M. K. Ferber for reviewing the manuscript, and C. A. Valentine and G. R. Carter for preparing the manuscript for publication.

REFERENCES

1. G. B. Kenney and H. K. Bowen, *Am. Ceram. Soc. Bull.* **62**(5), 590-96 (1983).

2. R. M. Spriggs, "Advanced Ceramic Materials: Applications and Opportunities," pp. 1-9 in *Intersociety Symposium on Machining of Advanced Ceramic Materials and Components*, ed. R. E. Barks, K. Subramanian, and K. E. Ball, The American Ceramic Society, Inc., Westerville, Ohio, 1987.

3. K. Subramanian, "Advanced Ceramic Components: Current Methods and Future Needs For Generation of Surfaces," pp. 10-32 in *Intersociety Symposium on Machining of Advanced Ceramic Materials and Components*, ed. R. E. Barks, K. Subramanian, and K. E. Ball, The American Ceramic Society, Inc., Westerville, Ohio, 1987.

4. Personal communication, R. H. Licht, Norton Company, High Performance Ceramics, Northboro, MA, to D. P. Stinton, ORNL, June 10, 1987.

5. R. F. Firestone, "Abrasionless Machining Methods for Ceramics," pp. 261-81 in *The Science of Ceramic Machining and Surface Finishing, II*, ed. B. J. Hockey and R. W. Rice, NBS Special Publication 562, U.S. Government Printing Office, Washington, D.C., 1979.

6. A. G. Evans, "Abrasive Wear in Ceramics: An Assessment," pp. 1-14 in *The Science of Ceramic Machining and Surface Finishing, II*, ed. B. J. Hockey and R. W. Rice, NBS Special Publication 562, U.S. Government Printing Office, Washington, D.C., 1979.

7. J. T. Hagen, M. V. Swain, and J. E. Field, "Nucleation of Median and Lateral Cracks Around Vickers Indentations in Soda-Lime Glass," pp. 15-21 in *The Science of Ceramic Machining and Surface Finishing, II*, ed. B. J. Hockey and R. W. Rice, NBS Special Publication 562, U.S. Government Printing Office, Washington, D.C., 1979.

8. H. P. Kirchner, R. M. Gruver, and D. M. Richard, "Fragmentation and Damage Penetration During Abrasive Machining of Ceramics," pp. 23-42 in *The Science of Ceramic Machining and Surface Finishing, II*, ed. B. J. Hockey and R. W. Rice, NBS Special Publication 562, U.S. Government Printing Office, Washington, D.C., 1979.

9. A. B. Van Groenou, N. Maan and J. B. D. Veldkamp, "Single-Point Scratches as a Basis for Understanding Grinding and Lapping," pp. 43-60 in *The Science of Ceramic Machining and Surface Finishing, II*, ed. B. J. Hockey and R. W. Rice, NBS Special Publication 562, U.S. Government Printing Office, Washington, D.C., 1979.

10. D. W. Richerson, *Modern Ceramic Engineering; Properties, Processing, and Use in Design*, pp. 260-73, Marcel Dekker, Inc., New York, 1982.

11. P. F. Becher, "Ceramic Machining and Surface Finishing," pp. 217-26 in *Treatise on Materials Science and Technology, Vol. 9*, Academic Press, Inc., New York, 1976.

12. O. Imanaka, S. Fujino, and S. Mineta, "Direct Observation of Material Removal Process During Grinding of Ceramics," pp. 37-44 in *The Science of Ceramic Machining and Surface Finishing, I*, ed. S. J. Schneider and R. W. Rice, NBS Special Publication 348, U.S. Government Printing Office, Washington, D.C., 1972.

13. R. W. Rice, "Ceramics for High Performance Applications," pp. 287-343 in *Proceedings of the Second Army Materials Technology Conference*, Hyannis, Mass., November 13-16, 1973.

14. A. B. Van Groenou, N. Mann, and J. D. B. Veldkamp, pp. 320-59 in "Scratching Experiments on Various Ceramic Materials," *Philips Res. Report 30*, Butterworth and Company, New York, New York, 1975.

15. H. P. Kirchner and J. C. Conway, Jr., "Mechanisms of Material Removal and Damage Penetration During Single Point Grinding of Ceramics," pp. 53-62 in *Machining of Ceramic Materials and Components*, ed. K. Subramanian and R. Komanduri, The American Society of Mechanical Engineers, New York, 1985.

16. E. Salje and H. Mohen, "Advanced Techniques in Grinding High-Strength Ceramic Materials," pp. 33-49 in *Intersociety Symposium on Machining of Advanced Ceramic Materials and Components*, ed. R. E. Barks, K. Subramanian, and K. E. Ball, The American Ceramic Society, Inc., Westerville, Ohio, 1987.

17. J. Yoshioka, M. Niyashita, A. Kanai, and M. Daito, "Applications of Grinding Wheel to Ultra-precision Machining for Precise Surface Generation on Grinding Wheel," pp. 50-69 in *Intersociety Symposium on Machining of Advanced Ceramic Materials and Components*, ed. R. E. Barks, K. Subramanian, and K. E. Ball, The American Ceramic Society, Inc., Westerville, Ohio, 1987.

18. P. F. Becher, "Abrasive Surface Deformation of Sapphire," *J. Am. Ceram. Soc.* **59**(3-4), 143-45 (1976).

19. R. Stickler and G. R. Booker, "Surface Damage on Abraded Silicon Specimens," *Phil. Mag.* **8**(2), 221-25 (1963).

20. H. Roder, H. Dumler and H. O. Juchem, "A Study of the Surface Obtained When Sawing Ceramic High-Tension Insulators," *Industrial Diamond Review*, 83-86 (March 1979).

21. R. W. Rice and J. J. Mecholsky, "The Nature of Strength Controlling Machining Flaws in Ceramics," pp. 351-78 in *The Science of Ceramic Machining and Surface Finishing, II*, ed. B. J. Hockey and R. W. Rice, NBS Special Publication 562, U.S. Government Printing Office, Washington, D.C., 1979.

22. T. Bifano, P. Blake, T. Dow, and R. Scattergood, "Precision Machining of Ceramic Materials," pp. 99-120 in *Intersociety Symposium on Machining of Advanced Ceramic Materials and Components*, ed. R. E. Barks, K. Subramanian, and K. E. Ball, The American Ceramic Society, Inc., Westerville, Ohio, 1987.

23. Y. Matsuo, T. Ogasawara, E. Yasuda, and S. Kimura, "Analytical and Experimental Study on the Bending Strength of Silicon Carbide Specimens with Ground Surfaces," pp. 235-48 in *Intersociety Symposium on Machining of Advanced Ceramic Materials and Components*, ed. R. E. Barks, K. Subramanian, and K. E. Ball, The American Ceramic Society, Inc., Westerville, Ohio, 1987.

24. L. R. Clarke, B. T. Khuri-Yakup, C. H. Chou, and D. B. Marshall, "Ultrasonic Measurement of Machining-Damage-Induced Surface Defects in Ceramics," pp. 63-68 in *Machining of Ceramic Materials and Components*, ed. K. Subramanian and R. Komanduri, The American Society of Mechanical Engineers, New York, 1985.

25. R. W. Rice, "Machining Flaws and the Strength Grain Size Behavior of Ceramics," pp. 429-54 in *The Science of Ceramic Machining and Surface Finishing, II*, ed. B. J. Hockey and R. W. Rice, NBS Special Publication 562, U.S. Government Printing Office, Washington, D.C., 1979.

26. T. E. Easler, T. A. Countermine, R. E. Tressler, and R. C. Bradt, "Surface Machining Effects on the Strength Distributions of Aluminas," pp. 455-62 in *The Science of Ceramic Machining and Surface Finishing, II*, ed. B. J. Hockey and R. W. Rice, NBS Special Publication 562, U.S. Government Printing Office, Washington, D.C., 1979.

27. C. A. Andersson and R. J. Bratton, "Effect of Surface Finish on the Strength of Hot Pressed Silicon Nitride," pp. 463-76 in *The Science of Ceramic Machining and Surface Finishing, II*, ed. B. J. Hockey and R. W. Rice, NBS Special Publication 562, U.S. Government Printing Office, Washington, D.C., 1979.

28. C. Cm. Wu and K. R. McKinney, "The Effect of Surface Finishing on the Strength of Commercial Hot Pressed Silicon Nitride," pp. 477-82 in *The Science of Ceramic Machining and Surface Finishing, II*, ed. B. J. Hockey and R. W. Rice, NBS Special Publication 562, U.S. Government Printing Office, Washington, D.C., 1979.

29. T. J. Whalen and L. L. Terner, "Surface Condition and Strength of Silicon Carbide-Silicon Materials," pp. 483-88 in *The Science of Ceramic Machining and Surface Finishing, II*, ed. B. J. Hockey and R. W. Rice, NBS Special Publication 562, U.S. Government Printing Office, Washington, D.C., 1979.

30. D. W. Richerson and M. W. Robare, "Turbine Component Machining Development," pp. 209-20 in *The Science of Ceramic Machining and Surface Finishing, II*, ed. B. J. Hockey and R. W. Rice, NBS Special Publication 562, U.S. Government Printing Office, Washington, D.C., 1979.

31. G. L. Messing, L. G. McCoy, and C. R. Hassler, "The Fabrication of Alumina Tooth Roots by Diamond Contour Grinding," pp. 247-54 in *The Science of Ceramic Machining and Surface Finishing, II*, ed. B. J. Hockey and R. W. Rice, NBS Special Publication 562, U.S. Government Printing Office, Washington, D.C., 1979.

32. R. Sedlacek, F. A. Halden, and P. J. Jorgensen, "On the Strength of Ceramics as a Function of Microstructure, Grinding Parameters, Surface Finish, and Environmental Conditions," pp. 89-97 in *The Science of Ceramic Machining and Surface Finishing, I*, ed. S. J. Schneider and R. W. Rice, NBS Special Publication 348, U.S. Government Printing Office, Washington, D.C., 1972.

33. J. J. Mecholsky, P. F. Becher, and S. W. Freiman, "Relationship Between Surface Structure, Ceramic Processing and Mechanical Properties," pp. 189-215 in *Proc. of the Sagamore Conference, Am. Mater. Res. Soc., Vol. 26*, J. J. Burke and V. Weiss, Plenum Press, New York, 1982.

34. R. E. Tressler, R. A. Langensiepen, and R. C. Bradt, "Surface-Finish Effects on Strength-vs-Grain-Size Relations in Polycrystalline Al_2O_3," *J. Am. Ceram. Soc.* 57(5), 226-27 (1974).

35. P. G. Werner and I. M. Kenter, "Work Material Removal and Wheel Wear Mechanisms in Grinding of Polycrystalline Diamond Compacts," pp. 86-98 in *Intersociety Symposium on Machining of Advanced Ceramic Materials and Components*, ed. R. E. Barks, K. Subramanian, and K. E. Ball, The American Ceramic Society, Inc., Westerville, Ohio, 1987.

36. T. Imai, "Performance of Diamond Wheel in Grinding Silicon Nitride Ceramics," pp. 138-50 in *Intersociety Symposium on Machining of Advanced Ceramic Materials and Components*, ed. R. E. Barks, K. Subramanian, and K. E. Ball, The American Ceramic Society, Inc., Westerville, Ohio, 1987.

37. M. S. Thomas, R. D. West, and W. E. West, Jr., "A Study of Selected Grinding Parameters on the Surface Finish and Strength of Hot Pressed Silicon Nitride," pp. 218-34 in *Intersociety Symposium on Machining of Advanced Ceramic Materials and Components*, ed. R. E. Barks, K. Subramanian, and K. E. Ball, The American Ceramic Society, Inc., Westerville, Ohio, 1987.

38. G. Spur, C. Stark, and T. H. Tio, "Grinding of Non-Oxide Ceramics Using Diamond Grinding Wheels," pp. 33-44 in *Machining of Ceramic Materials and Components*, ed. K. Subramanian and R. Komanduri, The American Society of Mechanical Engineers, New York, 1985.

39. B. G. Koepke and R. J. Stokes, "Grinding Damage in Ceramics," *Naval Research Reviews* 27, 1-17 (1974).

40. B. G. Koepke, "An Assessment of Surface and Subsurface Damage Introduced in Ceramics by Semifinish Grinding Operations," pp. 317-32 in *The Science of Ceramic Machining and Surface Finishing, I*, ed. S. J. Schneider and R. W. Rice, NBS Special Publication 48, U.S. Government Printing Office, Washington, D.C., 1972.

41. B. G. Koepke and R. J. Stokes, "Grinding Damage in Ceramics," Society of Manufacturing Engineers Publication No. EM77-358 (1977).

42. P. M. Stephan and S. Tuffs, "Machining of High Performance Silicon Nitride Mechanical Face Seal Rings," pp. 75-80 in *Machining of Ceramic Materials and Components*, ed. K. Subramanian and R. Komanduri, The American Society of Mechanical Engineers, New York, 1985.

43. E. D. Doyle and S. K. Dean, "The Fine Grinding of Glass and Ceramic Material Using Conventional Grinding Wheels," pp. 107-14 in *Machining of Ceramic Materials and Components*, ed. K. Subramanian and R. Komanduri, The American Society of Mechanical Engineers, New York, 1985.

44. I. A. Weinz, "The Diamond Machining of Alumina Thread Guides," *Ind. Diamond Rev.*, 306-10 (August 1970).

45. Personal communication, Peter Oberhauser, Norton/TRW, Northboro, MA, to D. P. Stinton, ORNL, May 20, 1987.

46. K. Subramanian and P. P. Keat, "Parametric Study on Grindability of Structural and Electronic Ceramics--Part I," pp. 25-32 in *Machining of Ceramic Materials and Components*, ed. K. Subramanian and R. Komanduri, The American Society of Mechanical Engineers, New York, 1985.

47. H. O. Juchem and H. Wapler, "Precision Machining of Non-Metallic Materials--Some Practical Guidelines," *Ind. Diamond Rev.*, 43-50 (February 1979).

48. K. Ishikawa and K. Ichikawa, "Study on Precise Slicing of Hard and Brittle Materials by the Vibratory Multi-Blade Cutting Method," *Bull. Jpn. Soc. Precis. Eng.* 17(2), 135-37 (1983).

49. N. LaCourte, "Abrasive-Jet Machining--A Solution Tool for Problem Jobs," *Tool. Prod.*, 104-06 (November 1979).

50. M. Hashish, "Cutting With Abrasive Waterjets," *Carbide Tool J.* **16**(5), 16-23 (Sept./Oct. 1984).

51. J. E. Field and M. B. Lesser, "On the Mechanics of High Speed Liquid Jets," *Proc. R. Soc. London, Ser. B* **357**, 143-62 (1977).

52. I. W. Farmer and P. B. Attewell, "Rock Penetration by High Velocity Water Jet," *Intl. J. Rock. Mech. Min. Sci.* **2**(2), 71-77 (1965).

53. T. J. Kim, J. G. Sylvia, and L. Posner, "Piercing and Cutting of Ceramics by Abrasive Waterjet," pp. 19-24 in *Machining of Ceramic Materials and Components*, ed. K. Subramanian and R. Komanduri, The American Society of Mechanical Engineers, New York, 1985.

54. J. B. Kohls, "Ultrasonic Manufacturing Process," *Carbide Tool J.* **16**(5), 12-15 (Sept./Oct. 1984).

55. E. D. Cordemans, B. O. Hannecart, and J. P. Gallemaers, "Developments in Ultrasonic Machining of Ceramics," pp. 131-137 in *Intersociety Symposium on Machining of Advanced Ceramic Materials and Components*, ed. R. E. Barks, K. Subramanian, and K. E. Ball, The American Ceramic Society, Inc., Westerville, Ohio, 1987.

56. W. R. Tyrrell, "A New Method for Machining Hard and Brittle Materials," *SAMPE Quart.* 1(2), 55-9 (1970).

57. D. Van Cleave, "Ultrasonics Gets Bigger Jobs in Machining and Welding," *Iron Age* 69-72 (September 13, 1976).

58. H. Vora and R. J. Stokes, *Study of Mechano-Chemical Machining of Ceramics and the Effect on Thin Film Behavior*, Office of Naval Research Report No. N00014-80-C-0437-2 (January 1983).

59. N. Yasunaga, N. Tarumi, A. Obara, and O. Imanaka, "Mechanism and Application of the Mechanochemical Polishing Method Using Soft Powder," pp. 171-82 in *The Science of Ceramic Machining and Surface Finishinig, II*, ed. B. J. Hockey and R. W. Rice, NBs Special Publication 562, U.S. Government Printing Office, Washington, D.C., 1979.

60. H. Vora and R. J. Stokes, "Study of Mechanochemical Polishing of Silicon Nitride," *J. Am. Ceram. Soc.* **65**, C-140 (1982).

61. J. Bannard, "Electrochemical Machining," *J. Appl. Electrochem.* **7**(1), 1-29 (1977).

62. S. Malkin and R. Levinger, "Electrochemical Grinding and Surface Damage for Cemented Carbides," *J. Appl. Electrochem.* **7**(1), 305-16 (1977).

63. M. A. Sturans and W. W. Koste, "Kinetic Focusing Requirements for Precision e-Beam Machining of Unfired Ceramic Material," *J. Vac. Sci. Technol.* **15**(3), 1060-63 (1978).

64. J. Drew, "Electron Beams Tackle Tough Machining Jobs," *Mach. Design* **48**(4), 94-98 (1976).

65. Anon., "Non-Traditional Machining Methods - EDM vs. DCM," *Cutting Tool Engrng.* **25**(5-6), 8-11 (1973).

66. I. A. Bucklow and M. Cole, "Spark-Machining," *Met. Rev.* **14**(135), 103-118 (1969).

67. J. Longfellow, "High Speed Drilling in Alumina Substrates with a CO_2 Laser," *Am. Cer. Soc. Bull.* **50**(3), 251-53 (1971).

68. R. Wagner, "Laser Drilling Mechanics," *J. Appl. Phys.* **45**(10), 4631-37 (1974).

69. R. K. Mosavi, "Laser, Versatile Tools in Job Shop Industries," *Carbide Tool J.* **18**(6), 3-5 (Nov./Dec. 1986).

70. S. M. Copley, M. Bass, and R. G. Wallace, "Shaping Silicon Compound Ceramics with a Continuous Wave Carbon Dioxide Laser," pp. 283-92 in *The Science of Ceramic Machining and Surface Finishing, II*, ed. B. J. Hockey and R. W. Rice, NBS Special Publication 562, U.S. Government Printing Office, Washington, D.C., 1979.

71. R. W. Rice, "Arc, Laser and Electron Beam Machining of Ceramics," pp. 193-196 in *The Science of Ceramic Machining and Surface Finishing, I*, ed. S. J. Schneider and R. W. Rice, NBS Special Publication 348, U.S. Government Printing Office, Washington, D.C., 1972.

72. B. Cockayne and D. G. Gasson, "The Machining of Oxides Using Gas Lasers," *J. Mater. Sci.* **6**, 126-29 (1971).

73. G. Chyrssolouris and J. Bredt, "Machining of Ceramics Using a Laser Lathe," pp. 70-85 in *Intersociety Symposium on Machining of Advanced Ceramic Materials and Components*, ed. R. E. Barks, K. Subramanian, and K. E. Ball, The American Ceramic Society, Inc., Westerville, Ohio, 1987.

74. T. J. Gardner and E. K. Beauchamp, "The Effect of Laser Machining on the Strength of Alumina Substrate Materials," pp. 249-255 in *Intersociety Symposium on Machining of Advanced Ceramic Materials and Components*, ed. R. E. Barks, K. Subramanian, and K. E. Ball, The American Ceramic Society, Inc., Westerville, Ohio, 1987.

75. G. Chryssolouris, J. Bredt, and S. Kordas, "Laser Turning for Difficult to Machine Materials," pp. 9-18 in *Machining of Ceramic Materials and Components*, ed. K. Subramanian and R. Komanduri, The American Society of Mechanical Engineers, New York, 1985.

76. Personal communication, S. M. Copley, University of Southern California, Los Angeles, to D. P. Stinton, ORNL, May 7, 1987.

77. O. Imanaka and M. Okutomi, "New Concepts on Surface Finishing and its Applications to Ceramics," pp. 157-70 in *The Science of Ceramic Machining and Surface Finishing, II*, ed. B. J. Hockey and R. W. Rice, NBS Special Publication 562, U.S. Government Printing Office, Washington, D.C., 1979.

78. P. G. Gloersen, "Ion-Beam Etching," *J. Vac. Sci. Technol.* 12(1), 28-35 (1975).

79. S. Somekh, "Introduction to Ion and Plasma Etching," *J. Vac. Sci. Technol.* 13(5), 1003-07 (1976).

80. J. J. Mecholsky, R. W. Rice, G. W. Anderson, and G. H. Sigel, "Effects of Sputtering on the Strength of Silicate Glasses," *J. Appl. Phys.* 47(7), 2972-74 (1976).

81. E. W. Rice, "The Effects of Sputtering on Surface Topography and Strength of Ceramics," pp. 171-88 in *The Science of Ceramic Machining and Surface Finishing*, ed. S. J. Schneider and R. W. Rice, NBS Special Publication 348, U.S. Government Printing Office, Washington, D.C., 1972.

82. Personal communication, R. Licht, Norton Co., Worcester, MA, to D. P. Stinton, ORNL, June 10, 1987.

83. Personal communication, R. Palia, Standard Oil Engineered Materials Co., Niagara Falls, NY, to D. P. Stinton, ORNL, May 18, 1987.

84. Personal communication, T. M. Yonushonis, Cummins Engine Co. Inc., Columbus, IN, to D. P. Stinton, ORNL, May 28, 1987.

85. Personal communication, B. Dinkha, Coors Porcelain Co., Golden, CO, to D. P. Stinton, ORNL, May 21, 1987.

86. Personal communication, A. E. Pasto, GTE Laboratories, Inc., Waltham, MA, to D. P. Stinton, ORNL, May 22, 1987.

87. Personal communication, D. W. Richerson, Ceramatec, Inc., Salt Lake City, UT, to D. P. Stinton, ORNL, May 25, 1987.

88. Personal Communication, J. E. Garnier, Standard Oil Engineered Materials Co., Niagara Falls, NY, to D. P. Stinton, ORNL, May 29, 1987.

89. G. A. Cooper, "Some Observations on Environmental Effects When Diamond Drilling," pp. 115-38 in *The Science of Ceramic Machining and Surface Finishing, II*, ed. B. J. Hockey and R. W. Rice, NBS Special Publication 562, U.S. Government Printing Office, Washington, D.C., 1979.

90. R. B. Cuthrell, "The Effect of Chemical Environments on the Fracture of Ceramic Surfaces," pp. 139-46 in *The Science of Ceramic Machining and Surface Finishing, II*, ed. B. J. Hockey and R. W. Rice, NBS Special Publication 562, U.S. Government Printing Office, Washington, D.C., 1979.

INTERNAL DISTRIBUTION

1-2. Central Research Library
3. Document Reference Section
4-5. Laboratory Records Department
6. Laboratory Records, ORNL RC
7. ORNL Patent Section
8-10. M&C Records Office
11. D. J. Alexander
12. R. L. Beatty
13. P. F. Becher
14. T. M. Besmann
15. P. J. Blau
16. A. Bleier
17. K. W. Boling
18. R. A. Bradley
19. V. R. Bullington
20. A. J. Caputo
21. R. S. Carlsmith
22. R. H. Cooper, Jr.
23. G. L. Copeland
24. D. F. Craig
25. J. R. DiStefano
26. J. I. Federer
27. B. E. Foster
28. R. K. Genung
29. R. S. Graves
30. C. Hsueh
31. M. A. Janney
32. D. W. Jared
33. D. R. Johnson
34. R. R. Judkins
35. H. E. Kim
36. O. F. Kimball
37. M. B. Lewis
38. K. C. Liu
39. E. L. Long, Jr.
40. C. J. McHargue
41. R. K. Nanstad
42. M. E. O'Hern
43. M. A. Schmidt
44-68. D. P. Stinton
69. R. A. Strehlow
70. J. P. Strizak
71. T. N. Tiegs
72. F. W. Wiffen
73. C. S. Yust
74. S. J. Zinkle
75. A. D. Brailsford (Consultant)
76. H. D. Brody (Consultant)
77. F. F. Lange (Consultant)
78. D. P. Pope (Consultant)
79. E. R. Thompson (Consultant)
80. J. B. Wachtman (Consultant)

EXTERNAL DISTRIBUTION

81-82. ACUREX CORPORATION, 555 Clyde Avenue, P.O. Box 7555, Mountain View, CA 94039

J. Sawyer
J. J. Schaefer

83. ADVANCED COMPOSITE MATERIALS CORP., Silag Operation, Route 6, Box A, Greer, SC 29651

J. F. Rhodes

84-85. AFWAL/MLLM, Wright-Patterson AFB, OH 45433

A. Katz
S. Szaruga

86-89. AIR PRODUCTS AND CHEMICALS, INC., P.O. Box 538T, Allentown, PA 18105

P. N. Dyer
D. P. Kramer
V. L. Magnotta
S. V. Raman

90. AMERCOM, INC., 8928 Fullbright Avenue, Chatsworth, CA 91311

W. E. Bustamante

91-92. AMERICAN MATRIX, INC., 118 Sherlake Dr., P.O. Box 23556, Knoxville, TN 37933

R. Nixdorf
S. Weaver

93-94. AMTL, Arsenal Street, Watertown, MA 02172

R. N. Katz
J. W. McCauley

95-96. ARGONNE NATIONAL LABORATORY, 9700 South Cass Avenue, Argonne, IL 60439

W. A. Ellingson
J. P. Singh

97-98. AVCO LYCOMING, 550 Main St., Stratford, CT 06497

S. Naik
T. M. Pattison

99-102. AVCO SPECIALTY MATERIALS, 2 Industrial Avenue, Lowell, MA 01851

B. Belason
T. F. Foltz
W. Foulds
J. F. Lacouste

103-105. BABCOCK & WILCOX COMPANY, Lynchburg Research Center, P.O. Box 239, Lynchburg, VA 24505

L. J. Ferrell
W. G. Long
H. H. Moeller

106-107. BASIC INDUSTRY RESEARCH LABORATORY, 1801 Maple Ave., Evanston, IL 60201-3135

J. W. Cox
R. R. Fessler

108-109. BATTELLE COLUMBUS LABORATORIES, 505 King Avenue, Columbus, OH 43201

S. P. Mukherjee
I. G. Wright

110-113. CATERPILLAR TRACTOR COMPANY, Peoria, IL 61629

D. Beahler
W. Haselkorn
G. G. Volbert
C. D. Weiss

114-115. CERAMATEC, INC., 163 West 1700 Street, Salt Lake City, UT 84115

C. W. Griffin
D. W. Richerson

116-119. CORNING GLASS WORKS, Corning, NY 14831

K. Chyung
R. C. Doman
D. C. Larson
P. Papa

120-122. CUMMINS ENGINE COMPANY, INC., 1000 5th St., Columbus, IN 47201

J. W. Patten
G. L. Starr
T. M. Yonushonis

123-124. ENGELHARD CORP., Menlo Park, CN28, Edison, NJ 08818

M. Garshasb
B. Yavuz

125. FIBER MATERIALS, INC., Biddeford Industrial Park, Biddeford, ME 04005

B. Severin

126-127. GA TECHNOLOGIES, INC., P.O. Box 81608, San Diego, CA 92138

T. D. Gulden
K. S. Mazdiyasni

128-130. GEORGIA INSTITUTE OF TECHNOLOGY, 225 North Avenue, Atlanta, GA 30332

J. A. Hanigofsky
W. J. Lackey
T. L. Starr

131-133. GTE LABORATORIES, INC., 40 Sylvan Road, Waltham, MA 02254

M. L. Huckabee
A. E. Pasto
V. Sarin

134-136. LANXIDE CORPORATION, Tralee Industrial Park, Newark, DE 19711

V. Irick, Jr.
M. Newkirk
A. W. Urquhart

137-139. LOS ALAMOS NATIONAL LABORATORY, P.O. Box 1663, Los Alamos, NM 87545

F. D. Gac
G. F. Hurley
J. J. Petrovic

140. NASA-LANGLEY RESEARCH CENTER, MS 188-B, Hampton, VA 23665

D. R. Tenney

141-143. NASA-LEWIS RESEARCH CENTER, 21000 Brookpark Road, Cleveland, OH 44135

D. H. Buckley
S. R. Levine
Harold Sliney

144-145. NATIONAL INSTITUTE OF STANDARDS AND TECHNOLOGY, 562 Fracture and Deformation, Gaithersburg, MD 20899

E. R. Fuller
S. M. Wiederhorn

146-147. NORTH CAROLINA STATE UNIVERSITY, Department of Materials Engineering, P.O. Box 5427, 232 Riddick Laboratory, Raleigh, NC 27607

Hans Conrad
R. F. Davis

148. NORTH CAROLINA STATE UNIVERSITY, P.O. Box 5995, Raleigh, NC 27607

H. Palmour III

149-150. PENNSYLVANIA STATE UNIVERSITY, Materials Engineering Research Laboratory, 201 Steidle Building, University Park, PA 16802

Karl Spear
R. E. Tressler

151-152. PRATT & WHITNEY AIRCRAFT, 400 Main St., East Hartford, CT 06108

S. Bose
O. Chen

153. REFRACTORY COMPOSITES, INC., 12220-A Rivera Road, Whittier, CA 90606

E. Paquette

154. TECHNOLOGY ASSESSMENT AND TRANSFER COMPANY, 9607 Muirfield Drive, Upper Marlboro, MD 20772

L. L. Fehrenbacher

155-156. 3M COMPANY, 3M Center, 218-35-04, St. Paul, MN 55144

M. A. Leitheiser
R. E. Richards

157-159. SOHIO ENGINEERED MATERIALS CO., P.O. Box 832, Niagara Falls, NY 14302

W. D. Boecker
J. E. Garnier
S. K. Lau

160. UNITED TECHNOLOGIES, P.O. Box 2691, West Palm Beach, FL 33402

M. I. Mendelson

161-162. UNITED TECHNOLOGIES RESEARCH CENTER, Silver Lane, MS 24, East Hartford, CT 06108

J. J. Brennan
Karl Prewo

163. UNIVERSITY OF WASHINGTON, Seattle, WA 98195

R. C. Bradt

164-166. VAPOR TECHNOLOGIES, INC., One Bradford Rd., Mount Vernon, NY 10553

J. Grumet
D. Mager
E. Pinkhasov

167-170. VIRGINIA POLYTECHNIC INSTIUTE AND STATE UNIVERSITY, Blacksburg, VA 24061

J. J. Brown
D. P. H. Hasselman
K. L. Reifsnider
W. W. Stinchcomb

171. VOUGHT CORPORATION, MSTH 83, P.O. Box 225907, Dallas, TX 75265

H. F. Volk

172-173. W. R. GRACE & COMPANY, 7379 Route 32, Columbia, MD 21044

R. W. Rice
J. P. Skalny

174. DOE, ENERGY CONVERSION & UTILIZATION TECHNOLOGIES DIVISION, Route Symbol CE-142, Forrestal Building, Washington, DC 20545

J. J. Eberhardt

175-178. DOE, MORGANTOWN ENERGY TECHNOLOGY CENTER, P.O. Box 880, Morgantown, WV 26505

R. J. Dellefield
D. Dubis
N. Holcombe
J. S. Wilson

179-181. DOE, OFFICE OF FOSSIL ENERGY, FE-14, GTN, Washington, DC 20545

D. J. Beecy
J. P. Carr
F. M. Glaser

182-183. DOE, OFFICE OF VEHICLE AND ENGINE RESEARCH AND DEVELOPMENT, Forrestal Building, 1000 Independence Avenue, Washington, DC 20585

A. A. Chesnes
R. B. Schulz

184. DOE, OAK RIDGE OPERATIONS OFFICE, P.O. Box 2001, Oak Ridge, TN 37831

Assistant Manager for Energy Research and Development

185-194. DOE, OFFICE OF SCIENTIFIC AND TECHNICAL INFORMATION, P.O. Box 62, Oak Ridge, TN 37831

For distribution by microfiche as shown in DOE/TIC-4500, Distribution Categories UC-95 (Energy Conservation).