WDB
12. Ma. 88

ornl

ORNL/TM-10864

OAK RIDGE
NATIONAL
LABORATORY

MARTIN MARIETTA

Design Guidelines for Remotely Maintained Equipment

T. W. Burgess
J. H. Evans
F. L. Peishel
S. L. Schrock
G. E. Smith
D. Macdonald

OPERATED BY
MARTIN MARIETTA ENERGY SYSTEMS, INC.
FOR THE UNITED STATES
DEPARTMENT OF ENERGY

Printed in the United States of America. Available from
National Technical Information Service
U.S. Department of Commerce
5285 Port Royal Road, Springfield, Virginia 22161
NTIS price codes—Printed Copy A06 Microfiche A01

This report was prepared as an account of work sponsored by an agency of the United States Government. Neither the United States Government nor any agency thereof, nor any of their employees, makes any warranty, express or implied, or assumes any legal liability or responsibility for the accuracy, completeness, or usefulness of any information, apparatus, product, or process disclosed, or represents that its use would not infringe privately owned rights. Reference herein to any specific commercial product, process, or service by trade name, trademark, manufacturer, or otherwise, does not necessarily constitute or imply its endorsement, recommendation, or favoring by the United States Government or any agency thereof. The views and opinions of authors expressed herein do not necessarily state or reflect those of the United States Government or any agency thereof.

ORNL/TM-10864
Dist. Category UC-526

Consolidated Fuel Reprocessing Program

DESIGN GUIDELINES FOR REMOTELY MAINTAINED EQUIPMENT

T. W. Burgess
J. H. Evans
F. L. Peishel
S. L. Schrock
G. E. Smith
Fuel Recycle Division

and

D. Macdonald
Engineering Division

Date Published – November 1988

Prepared for the
Office of Facilities, Fuel Cycle,
and Test Programs

Prepared by the
OAK RIDGE NATIONAL LABORATORY
Oak Ridge, Tennessee 37831
operated by
MARTIN MARIETTA ENERGY SYSTEMS, INC.
for the
U.S. DEPARTMENT OF ENERGY
under contract DE-AC05-84OR21400

CONTENTS

LIST OF FIGURES vii

LIST OF TABLES ix

ABSTRACT xi

1. INTRODUCTION 1

2. EQUIPMENT DESIGN FOR A NUCLEAR FUEL REPROCESSING FACILITY 3
   - 2.1 RADIOCHEMICAL PROCESS SYSTEMS 4
   - 2.2 RADIOCHEMICAL PROCESS EQUIPMENT 4
     - 2.2.1 Equipment Racks and Modules 4
     - 2.2.2 Location and Position Control for Remote Replacement of Equipment 7
   - 2.3 REMOTE MAINTENANCE PHILOSOPHY AND MANIPULATION EQUIPMENT 8
     - 2.3.1 Remote Manipulator System Equipment 9
   - 2.4 DECONTAMINATION AND CONTACT MAINTENANCE 11
   - 2.5 HOT-CELL PENETRATIONS 14

3. REMOTE MAINTENANCE SYSTEMS 15
   - 3.1 SERVOMANIPULATOR SYSTEMS 16
     - 3.1.1 ORNL Advanced Servomanipulator 18
     - 3.1.2 Central Research Laboratories Model M-2 Servomanipulator 18
   - 3.2 MECHANICAL MASTER/SLAVE MANIPULATORS 25
   - 3.3 BRIDGE CRANES 26
   - 3.4 LIGHTING 27
     - 3.4.1 General Hot-Cell Lighting 28
     - 3.4.2 Auxiliary Cell Lighting 28
   - 3.5 CLOSED-CIRCUIT TELEVISION 28
   - 3.6 SHIELDING WINDOWS 30
   - 3.7 PERISCOPES 30
   - 3.8 SUPPLEMENTARY VIEWING DEVICES 30
   - 3.9 AUDIO SYSTEMS 30
   - 3.10 TOOLS 30
   - 3.11 CELL PENETRATIONS 39

4. GENERAL GUIDELINES FOR THE DESIGN OF REMOTELY MAINTAINABLE EQUIPMENT 41
4.1 RADIATION 41
4.2 STANDARDIZATION 42
4.3 REPLACEABILITY 43
4.4 ACCESSIBILITY 43
4.5 FAILURE CONSIDERATIONS AND MALFUNCTION DIAGNOSIS 43
4.6 CALIBRATION AND ADJUSTMENT 44
4.7 DECONTAMINATION 44
4.8 STORAGE OF EQUIPMENT 45
4.9 MODULARIZATION OF EQUIPMENT 45
4.9.1 Lifting Bails 46
4.9.2 Rest Points 46
4.9.3 Alignment Features 49
4.9.4 Fasteners 49
4.10 EQUIPMENT LABELING 56
4.11 COATINGS AND FINISHES 56

5. MATERIALS GUIDELINES FOR DESIGN 61
5.1 DESIGN CODES 61
5.2 MATERIAL SELECTION 61
5.2.1 Radiation-Resistant Materials 61
5.2.2 Corrosion-Resistant Materials 62
5.2.3 Materials Resistant to Galling 63

6. MECHANICAL AND ELECTROMECHANICAL SYSTEM DESIGN 65
6.1 EVALUATIONS AND ASSESSMENTS 65
6.1.1 Remote Maintenance Evaluation 65
6.1.2 Radiation Dose Assessment 66
6.2 MECHANICAL DRIVES 66
6.2.1 Electric Motors 66
6.2.2 Gear Trains and Reducers 67
6.2.3 Mechanical Drive Shaft Couplings 67
6.2.4 Bearings 70
6.2.5 Power Screws 73
6.2.6 Electrical Pigtails 74
6.2.7 Electrical Cable Carriers 74
6.2.8 Linear Motion Devices 75
6.3 LUBRICANTS 78
6.4 SEALS 78
6.4.1 Mechanical Static Seals 78
6.4.2 Rotary Shaft Seals 84
6.4.3 Linear Shaft Seals 84
6.5 PNEUMATIC AND HYDRAULIC SYSTEMS 84
6.5.1 Pneumatic Systems 84
6.5.2 Hydraulic Systems 84

6.6 IN-CELL SENSORS AND ACTUATOR CONTROLS 86
6.7 COVERS AND ENCLOSURES 86
6.7.1 Unit Shielding 86
6.7.2 Isolation Enclosures 87
6.8 OSHA CONSIDERATIONS 87

7. CONNECTOR DESIGN CONSIDERATIONS 89
7.1 FLUID CONNECTORS 89
7.1.1 Hanford-Purex Connector 89
7.1.2 TRU Connectors 91
7.1.3 Flanges 91
7.1.4 Tube Fittings 93
7.2 ELECTRICAL CONNECTORS 93

REFERENCES 95

APPENDIX A – CHARACTERISTICS OF RADIOACTIVITY 97

REFERENCES FOR APPENDIX A 98

APPENDIX B – RADIATION EFFECTS ON VARIOUS MATERIALS AND COMPONENTS 99

APPENDIX C – ELECTROMECHANICAL DEVICES, SOME RADIATION-RESISTANCE RATINGS 107

REFERENCES FOR APPENDIX C 107

APPENDIX D – DESIGN CHECKLISTS 109
D.1 Module Design Checklist 109
D.2 Design Priorities Checklist for Large Remotely Operated Process Cells 110
D.3 Design Checklist for Equipment Installation and Removal 110

LIST OF FIGURES

Fig. 2.1. The CFRP's integrated systems design philosophy 3
Fig. 2.2. A typical chemical process equipment rack and module arrangement 6
Fig. 2.3. An example of equipment rack location and dimensional control of components on a grid system 8
Fig. 2.4. Remote maintenance schematic 9
Fig. 2.5. Typical section of a reprocessing cell in a nuclear fuel reprocessing facility showing remotely operated maintenance equipment 12
Fig. 2.6. Typical section of a remotely operated and maintained nuclear fuel reprocessing facility 13
Fig. 3.1. AIMS servomanipulator transporter 16
Fig. 3.2. The advanced integrated maintenance system 17
Fig. 3.3. Advanced servomanipulator 19
Fig. 3.4. Servomanipulator motions 20
Fig. 3.5. The model M-2 slave unit 21
Fig. 3.6. The model M-2 master control station 22
Fig. 3.7. CRL model M-2 servomanipulator motions 23
Fig. 3.8. CRL model J master/slave manipulator, side elevation 25
Fig. 3.9. CRL series 50 master/slave manipulator, side elevation 26
Fig. 3.10. CRL model J, grip hand 27
Fig. 3.11. Control-room viewing monitors and camera controls 29
Fig. 3.12. Shielding window viewing areas 31
Fig. 3.13. Wall periscope 32
Fig. 3.14. Tools adapted for hot-cell use 33
Fig. 3.15. Lift-fixtures adapted for hot-cell use 34
Fig. 3.16. Standard wrenching operation on a commercial tubing connector by electromechanical manipulator 35
Fig. 3.17. Standard ratchet wrenching operation on a special fluid-connector by an electromechanical manipulator 36
Fig. 3.18. Impact wrench used with manipulator 37
Fig. 3.19. Large impact wrench for use with overhead bridge crane 38

Fig. 4.1. Lifting bails - types I to III 47
Fig. 4.2. Lifting bails - types IV and V 48
Fig. 4.3. Mating flange guide features 50
Fig. 4.4. Guide pins 51
Fig. 4.5. Floor guide bracket 52
Fig. 4.6. Vertical hanger bracket 53
Fig. 4.7. Captive fastener - typical 54
Fig. 4.8. Captive bolt sizes 55
Fig. 4.9. Spring-loaded captive bolt for remote assembly 56
Fig. 4.10. Captive nuts 57
Fig. 4.11. Detent pin 58
Fig. 6.1. Open spur-gear shaft coupling method 68
Fig. 6.2. Motor mount for remote assembly 69
Fig. 6.3. Low-speed commercial jaw-coupling 70
Fig. 6.4. Spline coupling example with lead-in feature 71
Fig. 6.5. A fabricated coupling example 72
Fig. 6.6. Remotely replaceable bearing assembly for a large shaft 73
Fig. 6.7. Remotely replaceable pillow block assembly for small shafting 74
Fig. 6.8. Short-motion cable suspension 75
Fig. 6.9. Long-motion cable festooning 76
Fig. 6.10. Flexible cable-way for large bundles 77
Fig. 6.11. An oil-less pneumatic cylinder for in-cell service 85
Fig. 7.1. Hanford-Purex 3-jaw connector 90
Fig. 7.2. TRU connector 92
Fig. B.1 Radiation effects on electronics, textiles, and base oils 104
Fig. B.2 Sensitivity of electronic components to gamma radiation 105

LIST OF TABLES

Table 2.1 Comparative manipulation performance times 10

Table 3.1 Performance and operating characteristics of model M-2 servomanipulator 24

Table 3.2 Load capacities of the CRL master/slave manipulator 28

Table 4.1 Conservative estimates of shielding required to lower in-cell dose rates to one-tenth of original 42

Table 5.1 Material galling data 64

Table 6.1 Summary of nuclear radiation-resistant lubricants 79

Table 6.2 Static seals with hot-cell applications 81

Table 7.1 Hanford-Purex connector seal selection list 91

Table B.1 Radiation level at which various substances become appreciably altered 99

Table B.2 Radiation effects on insulators 101

ABSTRACT

The CFRP has pioneered and developed the concept of totally remote operation and maintenance of process equipment in spent fuel reprocessing, using force-reflecting master/slave servomanipulators, coupled with television viewing, to extend human capabilities effectively throughout an uninhabitable environment. This concept enhances safeguard control of nuclear materials, provides for low-exposure of personnel to radiation and reliable recovery from unplanned events, ensures high plant availability, and aids eventual decommissioning of the plant. The results of this experience have been organized in this document to enable designers to consider this technology, not only in spent fuel reprocessing, but among various other situations that may be hazardous to personnel.

This document is an expanded and updated version of an earlier design guide that was specific to fuel reprocessing requirements. The guidelines identified in the present document suggest a general approach to the design of effective, reliable, safe, remotely operated and maintained facilities. This document may be used broadly to apply remotely maintained equipment in hostile environments based on proven techniques, equipment, and well-established practices. The concepts are particularly applicable to large plant facilities where economy of scale is important. The theme emphasizes utilization of ordinary commercial tools, equipment, and materials widely available.

1. INTRODUCTION

There are many situations where direct human access to a work site is not possible because of the hazardous nature of the surrounding environment. Human access can be denied as a result of high-radiation fields, the presence of toxic or explosive chemicals, absence of a breathable atmosphere, or extremes of temperature or pressure. Facilities or situations where these hazardous environments may be encountered include nuclear installations,[1] particularly those required for spent nuclear fuel reprocessing or waste treatments, chemical and munitions plants, fusion reactors, and earth orbital (space) applications. Maintenance or replacement of equipment in these environments must either be performed remotely or supplementary protection must be provided for personnel. This guide addresses situations where human access, even with protection, is not possible at the work site; hence, tasks must be performed remotely using servomanipulators or robotic devices.

Remote maintenance or replacement of failed equipment items typically requires considerably more time than hands-on or contact maintenance. This "downtime" penalty can be minimized in two ways: (a) through the proper design of the equipment being maintained to optimize the interfaces with the maintenance system and (b) through the use of a servomanipulator-based maintenance system, with good dexterity, maneuverability, and force reflection. This design guide addresses both of these subjects.

Section 2 of this document describes design philosophies, equipment, and processes for a particular type of remotely maintained facility, specifically a nuclear fuel reprocessing plant. Section 3 describes remote handling equipment available for in-cell use to provide remote maintenance of the facility. Section 4 contains general guidelines and considerations for the design and location of remotely operated and maintained equipment. Sections 5 through 7 provide specific design details for related process and maintenance equipment. The appendixes contain supplemental information on terminology, ionizing radiation and its effect on materials utilized with process equipment, and a design review checklist. Even though several of these sections are specific to a fuel reprocessing facility, in which radiation levels are sufficiently high to preclude human access, the general approach of designing a plant or a system, from inception, to be remotely maintained is equally applicable to other industries and hazardous environments.

2. EQUIPMENT DESIGN FOR A NUCLEAR FUEL REPROCESSING FACILITY

The successful integration and operation of a remotely operated process facility and its equipment involve three mutually dependent major design elements: the facility, the equipment operation, and the remote maintenance philosophy. The operating concept and/or arrangement chosen for any major system element directly influences the other two (see Fig. 2.1). This document discusses the basis for the design of radiochemical process equipment that is operated and maintained by remote control. The goals of this document are to assist the design development of facility operation and the remote maintenance system and to guide the designer's selection and control of functional interface relationships.

ORNL–DWG 88–5647AR

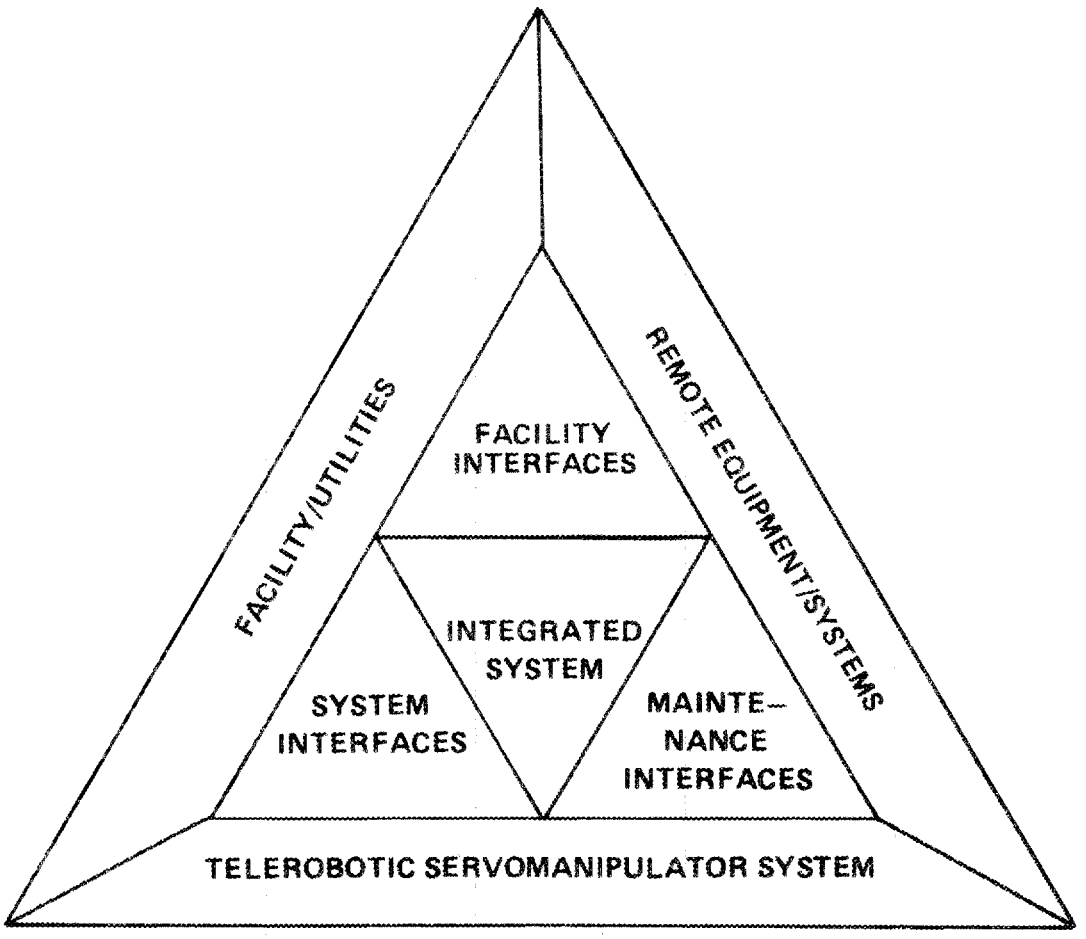

Fig. 2.1. The CFRP's integrated systems design philosophy.

2.1 RADIOCHEMICAL PROCESS SYSTEMS

This section briefly introduces the functional environment of radiochemical processing plant facility equipment operation. Radiochemical process systems, applied to nuclear fuel reprocessing plants, are designed to recover uranium and plutonium from spent power reactor fuel assemblies and to prepare process plant wastes for permanent disposal. The recovered fissile elements, uranium and plutonium, are made available for conversion to suitable fuel for recycle to power reactors. Process chemicals are recycled extensively to minimize the quantity of hazardous wastes leaving the plant. Various wastes from the process are converted to solid form and packaged for storage or shipment to a repository.

Many materials from spent nuclear fuel are highly radioactive. Ionizing rays emanate from radioactive materials, processes, and equipment. High-energy ionizing radiation is damaging to human tissue. A radiochemical process operation is conducted behind thick concrete walls to attenuate the radiation and shield operating personnel. Walls made of dense materials completely surround the hot-process system to form a shielded cell (or cells) and provide reliable integrity of containment for ionizing rays, airborne particles, and the in-cell atmosphere. Frequently, positive containment integrity is assured by lining the interior of concrete process cells with a continuous stainless steel sheet metal liner. All seams and service penetrations are sealed by gasketing or welding.

To minimize personnel exposure to the hostile environment, reprocessing plant operations and maintenance are performed utilizing electromechanical servomanipulator equipment to perform operations within the cells by remote control. Transfer of equipment and materials across the cell envelope boundary is accomplished with airlock chambers or similarly sealed transfer arrangements. The process cell walls mark the transition from hands-on contact to remote controlled operations.

The total remote operation and maintenance strategy used at the Oak Ridge National Laboratory (ORNL) protects operating personnel, preserves cell containment integrity, and guards against compromise of controlled nuclear materials security.

2.2 RADIOCHEMICAL PROCESS EQUIPMENT

The design of radiochemical process equipment for remote operation and maintenance depends on the remote repair philosophy and the remote maintenance handling equipment capabilities and limitations. All in-cell equipment must incorporate arrangements and features to optimize interfaces among the process components and the maintenance equipment. Inadequate interface control may result in reduced plant availability during routine maintenance, and extended outages can occur during unplanned events.

2.2.1 Equipment Racks and Modules

The equipment rack is one principal piece of equipment utilized to define, locate, and control interfaces among process equipment, maintenance equipment, and the plant facilities housing these items. ORNL has adapted and further developed the concept of process cell equipment racks.

A rack is described as a transportable, structural metal framework on which one or more process equipment items can be located and connected. These items, referred to as modules or subassemblies, may be permanently fastened to the rack (bolted, pinned, or welded) or positioned and attached with remotely operable fasteners for installation and removal by remote controlled handling equipment.

In general, equipment required for a specific unit operation is contained on a rack, including the associated piping, fluid pumps, wiring, and instrumentation. Interface wiring, piping, etc., leading to adjacent racks or out-of-cell services are connected to the rack via remotely operated connectors. These racks can be transferred with remote handling devices into a shielded process area, precisely located in the cell, or later removed from the cell when necessary for repair, replacement, or disposal. In some cases, a unit item of process equipment, due to large size or other characteristics such as a major waste storage tank, is treated as a single rack.

Equipment racks have been used to support process equipment in remotely operated radiochemical process facilities for many years. An outline of rack history and evolution is described by F. L. Peishel et al.[2] Rack design improvement has resulted from increases in versatility of the tools available to perform remote manipulation. The use of racks also allows prefabrication and testing of discrete groups of equipment, thereby permitting all fabrication to be performed in thoroughly equipped shop facilities. A rack also serves as the transportable entity from shop to cell location, making initial installation as well as potential replacement more effective.

The accurate grid system, described below, ensures reliable location of equipment when applied to racks and modules. The optimum equipment rack design can provide a structure that reliably interfaces with the three-dimensional grid system of the facility to ensure mutual dimensional dependability for all other cell-rack interfaces and provide for positive positioning of process equipment in functional locations. The final rack design depends on the remote handling equipment, maintenance tool suitability, and availability within the facility. These factors will control the final rack design to ensure overall plant compatibility. Hence, the dimensions of a new facility will be determined by the equipment racks, the process cell sizes, the facility aisles, transfer locks through which the racks are transported, and ancillary manned support facilities.

The remotely removable equipment modules are identified by a failure probability assessment of pieces or groups of equipment, the possibility of in-situ repair, and the remote handling abilities of the chosen manipulation equipment. For example, the bearings in a motor are difficult to replace in a shop, and nearly impossible with remote manipulators; hence, an entire motor is defined as the removable module. The coupling between a high-speed motor and the driven part is permanent, thus the entire assembly is defined as the module. The subject of motors and drives is expanded in Sect. 6.2.

Rack design should consider the arrangement of process equipment components for operability as well as maintainability. Locate removable parts on a rack at or near the periphery. Parts mounted permanently on a rack, such as piping, tanks, structural supports or the rack frame members should be arranged inboard to limit interference with the manipulation equipment. Figure 2.2 illustrates a typical chemical process equipment rack arranged to demonstrate some of these points.

The design and remote maintenance philosophy described above will be found in greater detail throughout later sections of this document.

ORNL-DWG 81-1164B

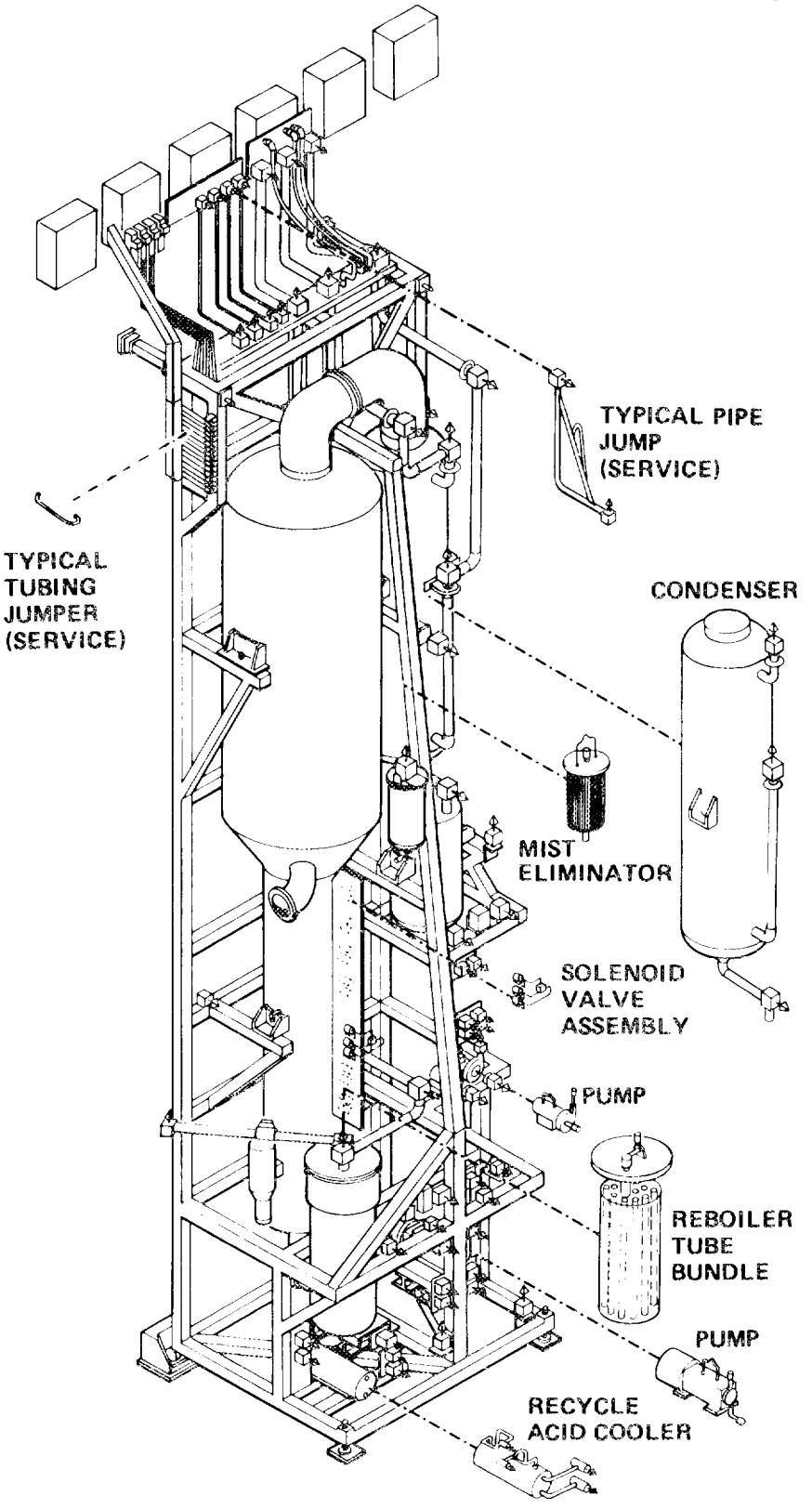

Fig. 2.2. A typical chemical process equipment rack and module arrangement.

2.2.2 Location and Position Control for Remote Replacement of Equipment

Equipment and components in any process system must be oriented and located accurately so that they will interface correctly after installation. Historically, from the initial construction of remotely operated and maintained facilities for nuclear fuel reprocessing, a precise coordinate grid was established from which the location of every piece of removable equipment was referenced. This was done to ensure that a piece of equipment could be replaced without requiring adjustments during reinstallment in a hostile environment inaccessible to personnel.

Equipment fabrication and building construction tolerances were established and maintained to accommodate the requirements. Cell floors or equipment rack basepads were located to ± 1.6 mm (1/16 in.) in elevation and ± 0.8 mm (1/32 in.) in the two horizontal axes. Placement of other cell components, interfacing with removable process equipment, was located to similar tolerances. The process equipment fabrication was controlled to matching tolerances.

Dimensional adjustments on equipment within a remotely maintained environment are both limited and difficult. In general, the remote maintenance design philosophy for a process facility should anticipate remote replacement of all equipment in the cells during the operating life of the facility. An accurate, close dimensional tolerance baseline or grid system referenced to permanent benchmarks is established at design concept. During final design, all equipment is referenced to this dimensional baseline, then verified and recorded on as-built drawings during construction, and maintained throughout the lifetime of the facility.

Figure 2.3 illustrates an example of equipment rack location and control of component interface dimensions on a grid system. Note that the waste tank is treated as an equipment rack.

The same three-dimensional X-Y-Z reference grid system points and benchmarks are used in the construction of the facility process cells, duplicated in cold-mock-ups of the hot-cell areas and permanently maintained; usually in an on-site shop. The placement of each equipment rack, the modules mounted on all racks, and all other equipment in the cell are provided with a reference point so that locations can be precisely indexed with respect to adjacent equipment as well as to the primary facility reference point. This method of chain referencing provides dimensional control, traceable from any item of equipment in the facility to any other point.

Consistent with this philosophy, a machine or unit operation is subdivided into logical assemblies or parts mounted on a main base frame or equipment rack. The subdivision is initially determined by its operating functions and then by the expected failure frequency, handling ability with the available tools, inherent repair scenarios, and the proposed repair method.

Generally, the greater the failure potential, the easier must be the replacement. Small equipment items, such as mechanical actuators and electrical switches, are designed to be replaceable in situ. The larger and heavier support racks or other massive parts requiring little or no maintenance are also removable, but with greater difficulty.

Following equipment fabrication and operational testing, prior to installation in the cell, all equipment is verified dimensionally and tested for remote maintainability in the respective mock-up before committing any equipment to the hostile environment. This ensures that all critical adjustments can be performed outside the hot process area and eliminates or limits minor adjustment requirements following final remote placement inside the hot process area. This procedure ensures confident, reliable installation of all the equipment in the remote cells initially, and the ability to expedite the accurate replacement of any component, short of the walls, during the operating life of the facility. This philosophy of process equipment design for installation in a remotely operated facility will enhance recovery success from any unplanned event.

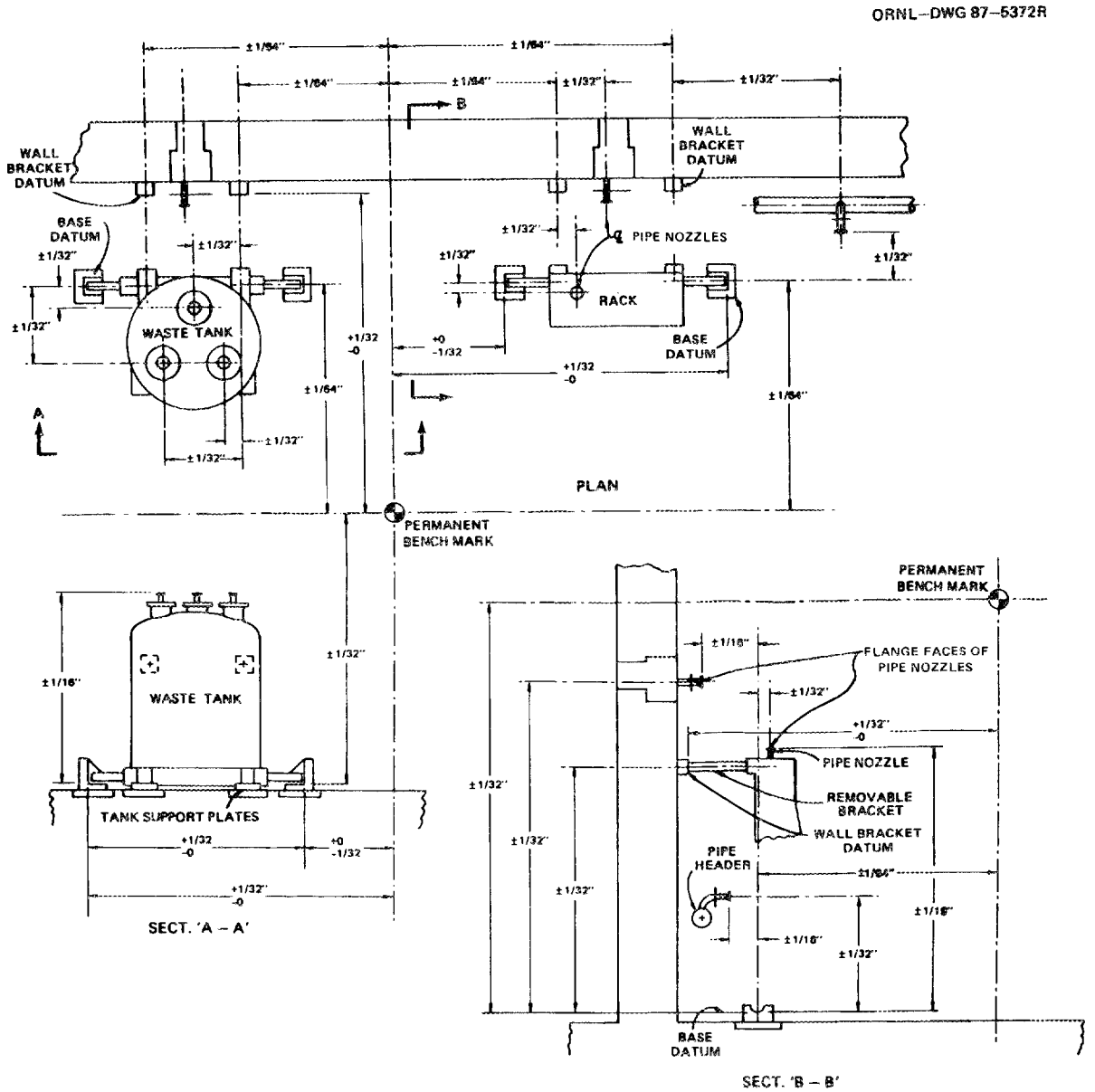

Fig. 2.3. An example of equipment rack location and dimensional control of components on a grid system.

2.3 REMOTE MAINTENANCE PHILOSOPHY AND MANIPULATION EQUIPMENT

The maintenance philosophy of process equipment for a total remote operated and maintained process facility should be selected early in the design. Decisions based on the logic network illustrated in Fig. 2.4 may be useful. Based on experience, the most frequently replaced unit is a module shown on the right side of the figure. Initially, a decision to repair or discard the item is made. If low cost or an inherent inability to repair renders an item expendable, the repair steps are bypassed and the item is sent directly to decontamination and disposal. If repairable, the repair method, tools required, and the repair site are determined. This may be in situ repair by

ORNL–DWG 86–11764

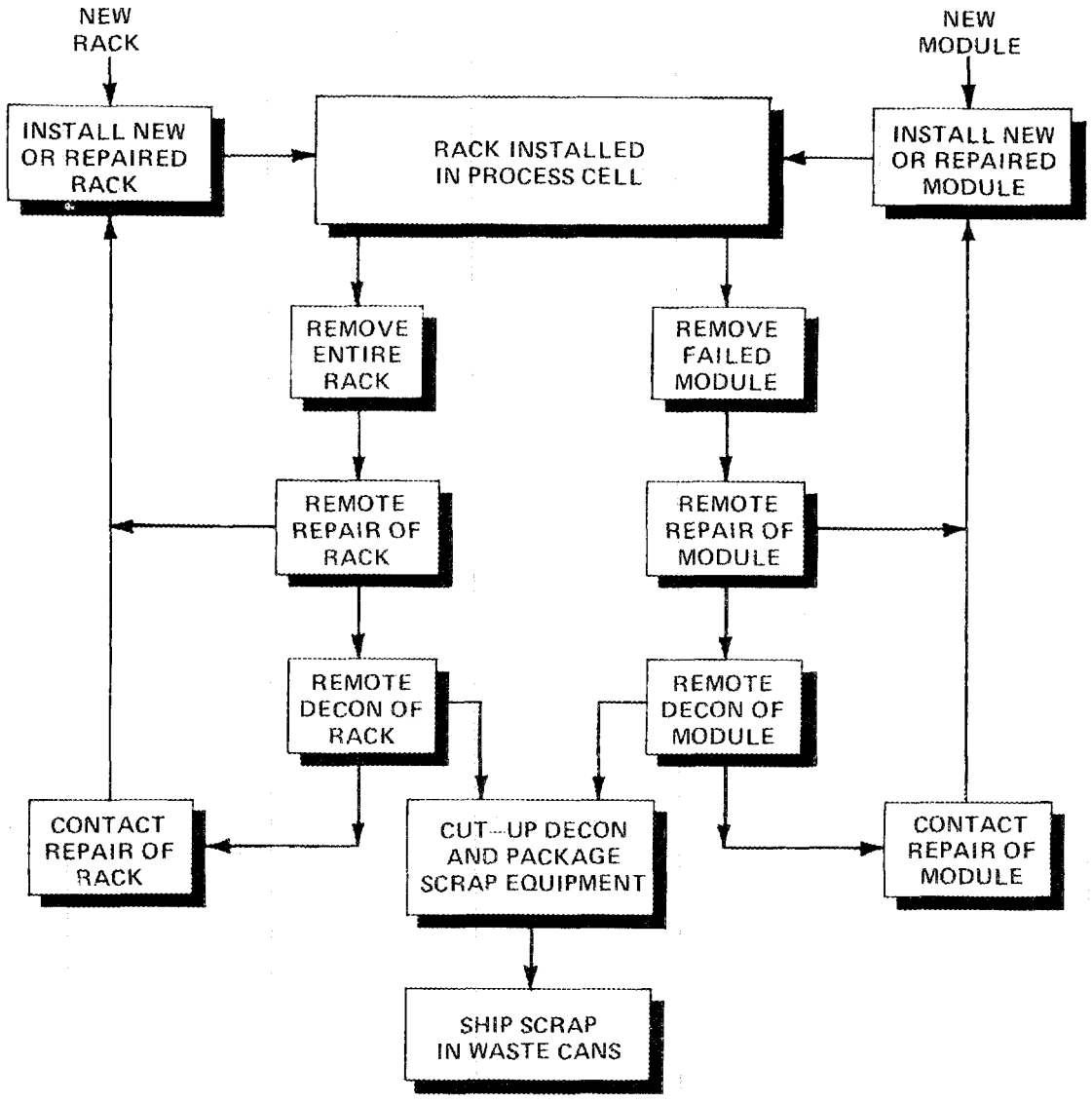

Fig. 2.4. Remote maintenance schematic.

remote controlled techniques, glovebox contact repair, or even hands-on contact repair following decontamination. The selection of the method of maintenance logic, during the initial design, is critical to success.

2.3.1 Remote Manipulator System Equipment

Remote electromechanical manipulator technology development related to nuclear facilities has resulted from the requirement to reduce the exposure of personnel to radiation and contamination to levels as low as reasonably achievable (ALARA) and to minimize potential for diversion of controlled nuclear materials.

The success of the remote maintenance philosophy is directly related to the dexterity of the remote manipulator system[3] and its viewing system.[4] Experience indicates that selection of more versatile and dexterous manipulators can result in reduced complexity of the in-cell equipment and compress the total time for repair. Many comparative tests verify the relative time to accomplish a given set of remote handling tasks among different types of manipulators, compared to "hands-on" performance. The comparisons, given in Table 2.1, show the results. These tests were performed independently by several organizations and in several countries.

Table 2.1. Comparative manipulation performance times

Manipulator type	Task completion time ratios
Skilled human operator (unencumbered)	1
Suited human (air-suit or equal)	8:1
Force-reflecting servomanipulator or master/slave manipulator (i.e., through-the-wall type)	8:1
Non-force-reflecting electromechanical manipulator (i.e., power-arm type)	20-50:1
Crane/impact wrench	50-500:1

The choice or adaptation of existing remote manipulation equipment for facility maintenance design methods depends on a number of factors; some are based on experience and others are facility design related. Based on ORNL research and development for breeder fuel reprocessing plants and equipment, the following performance attributes have been established as those needed for the remote manipulation equipment. These are provided for reference and would vary to the needs of a specific facility. Some of these attributes and the rationale for the breakdown are:

- Heavy lift requirements – greater than 450 kg (1000 lb)

  To be provided by overhead bridge cranes
- Routine requirements – lift up to 450-kg (1000 lb) range

  To be provided by an auxiliary hoist included with the servomanipulator, recognizing the needed spatial accessibility
- Dexterous equipment – Perform in situ maintenance and adjustments to manipulation

  To be provided by a servomanipulator in concert with either of the above

In addition to dexterity for manipulating the equipment being worked on, it is desirable that the manipulators be capable of accessing the process equipment from many directions, be available to operate in the major part of the cell volume, and manipulate general and special tools in any orientation in space. With more dexterous manipulators, fewer modifications are required to apply ordinary mechanical tools, and fewer special tools are needed.

Included in the design process to remotely manipulate the equipment, consideration and provisions must be included to remotely view all the operations within the cell, efficiently control all the operations of the maintenance tools, and recover from malfunctions. A system to meet these requirements would consist of the following equipment and attributes:

1. An overhead traveling trolley-bridge system supported on tracks that traverse the length of the cell. The trolley, able to move at right angles to the travel of the bridge, supports a telescoping mast. This assembly would ideally provide total volume coverage of the cell restricted only by the limits of travel inherent in the machine.
2. A manipulator system consisting of a pair of force-reflecting electromechanical servomanipulators, a 450-kg (1000-lb) capacity hoist, television cameras, and lights. This package is mounted on the vertical telescoping mast of item 1. Electronically linked to a remote control station, the combination of 1 and 2 extends task performing abilities of a human operator into the cell environment.
3. A heavy-duty overhead bridge crane to transport large equipment items.
4. Additional television cameras mounted on the overhead equipment and other selected locations for closeup and overall viewing of the operations. A longitudinal section and a cross section of a remotely operated and maintained nuclear fuel reprocessing facility showing a typical arrangement of the equipment described above is shown in Figs. 2.5 and 2.6.

Additionally, the ability to recover successfully from malfunction of any piece of the maintenance equipment must be provided. Recovery of a failed crane or manipulator transporter is accomplished by a companion, or "buddy," system. Another remote handling unit can be used to repair a failed unit or move it to a repair area. The companion unit is usually able to "manually" operate the disabled or damaged unit by remote control to release a load prior to towing.

2.4 DECONTAMINATION AND CONTACT MAINTENANCE

Design trade-offs are made against functional complexity created by a choice to either restore or replace failed equipment. The design of in-cell equipment for a radiochemical process may be greatly affected by a choice to either restore rather than replace the unit when required. Any need for manual contact maintenance service by personnel, and the associated requirements to apply decontamination procedures that guard against excessive radiation exposure, must weigh the additional overall cost.

When in-cell repairs cannot be performed by remote maintenance techniques, the failed component must be moved outside for contact maintenance or disposal. Decontamination is required before contact maintenance repair can be performed. Most equipment can be thoroughly decontaminated to reduce gamma radiation, at the surfaces, to levels below 10 mrads/h for contact repair or to levels acceptable for material disposal.

Decontamination procedures, normally done wet, employ cleaning agents ranging from water to corrosive chemical solvents. These can be applied by immersion in ultrasonic cleaning tanks, by high pressure spray, by internal flushing, or by simple surface wiping. Depending on the equipment and size, contact maintenance repair work can be performed in glove boxes or in large containment enclosures by personnel wearing protective clothing. Disposal is also normally preceded by decontamination, necessary size reduction when possible, and then packaging for temporary storage or permanent disposal.

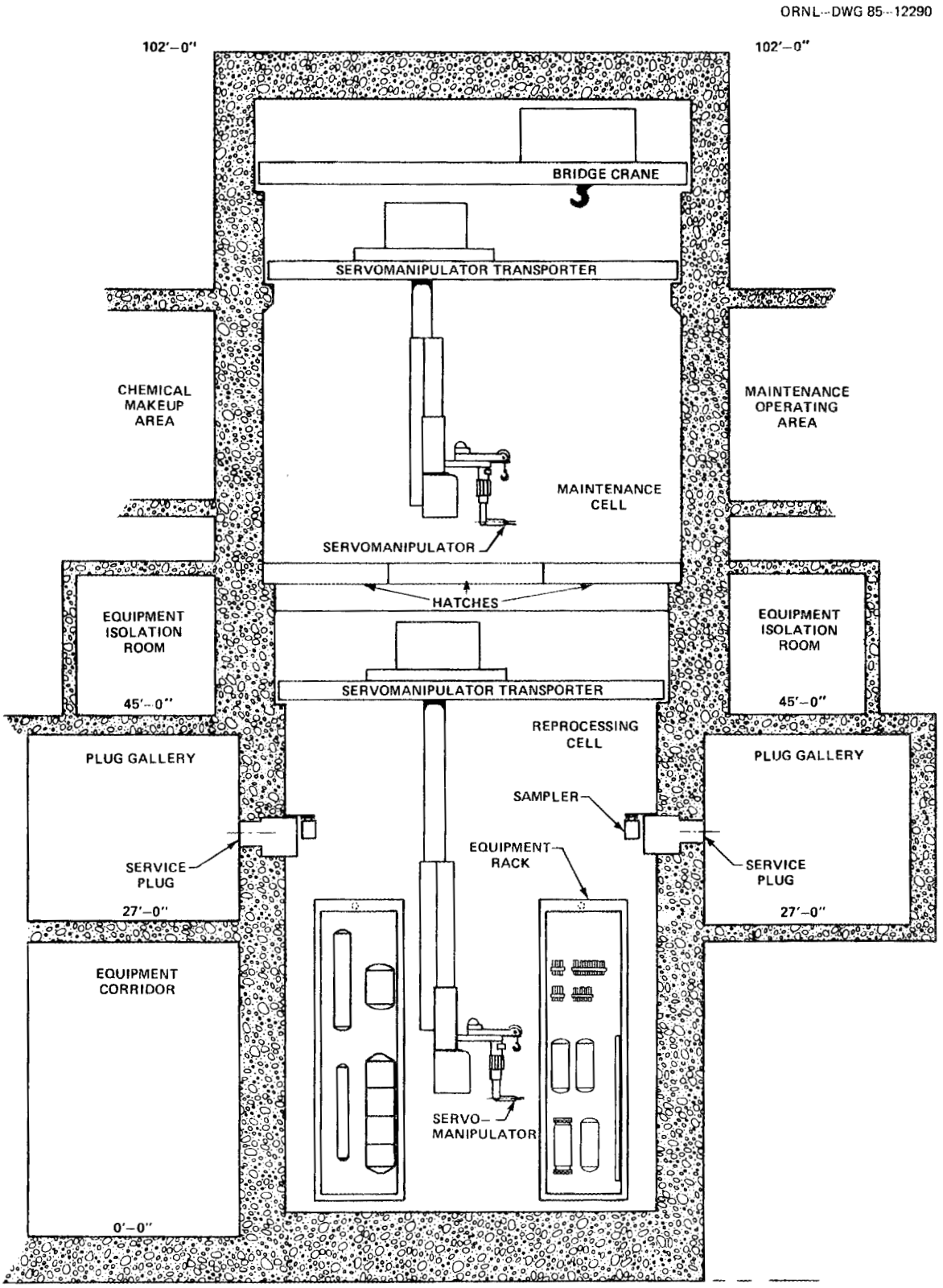

Fig. 2.5. Typical section of a reprocessing cell in a nuclear fuel reprocessing facility showing remotely operated maintenance equipment.

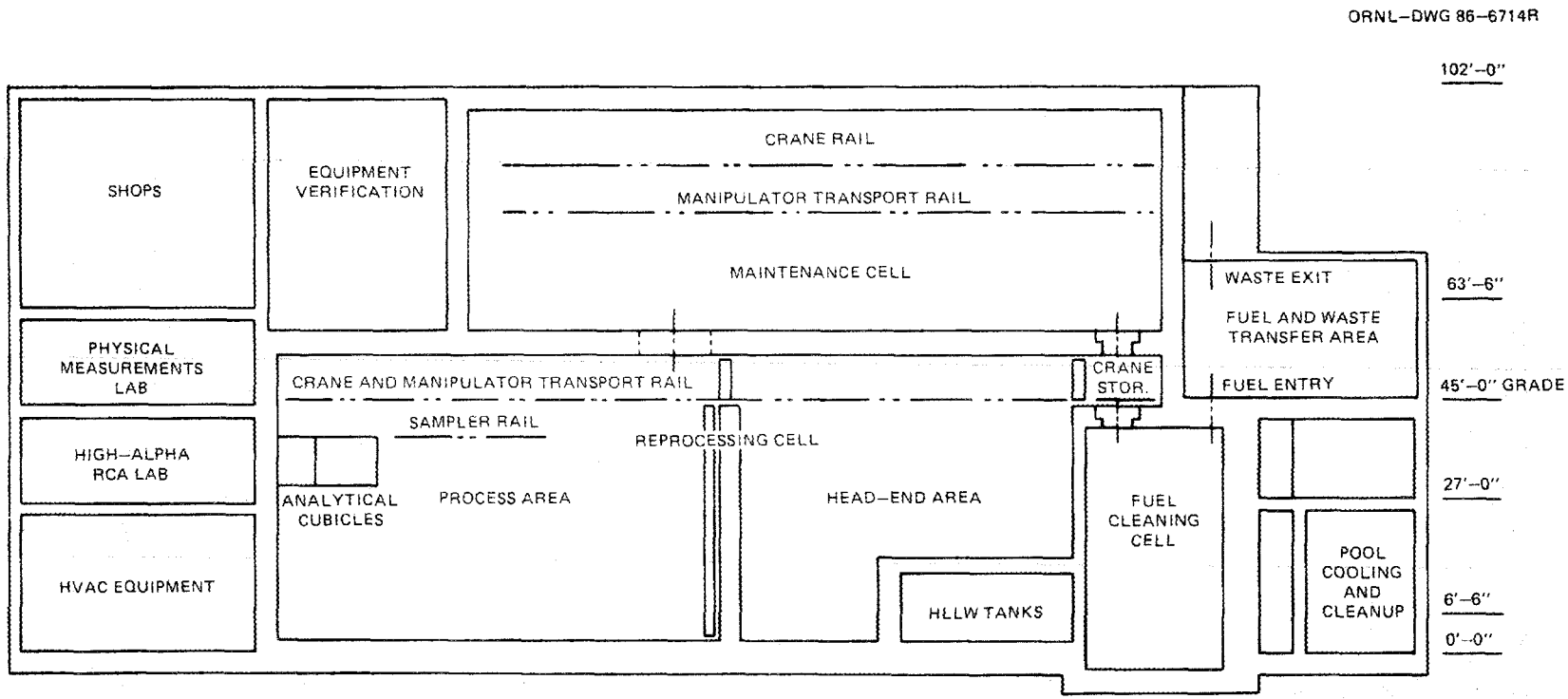

Fig. 2.6. Typical section of a remotely operated and maintained nuclear fuel reprocessing facility.

In any event, the decontamination and contact maintenance considerations affect design choices. For example, a unit to be repaired following decontamination must be designed to resist the decontamination fluids. This may raise both the fabrication cost and the cost to dispose the associated decontamination waste. In any case, the cost of disposing any item to a temporary or permanent site must also be factored into the design process.

2.5 HOT-CELL PENETRATIONS

In addition to the equipment in the hot cell, consideration must be given to the design and maintenance of the equipment that interfaces with the cell equipment and cell environment by penetrating the sealed cell walls to provide materials, services, and other support functions to the cell from outside. The penetrations are designed as part of the cell walls or other containment structure based on the functions to be performed in the cell and arranged usually in a manner to be maintained from outside the shielded area. If not, the maintenance must be conducted remotely and be performed within the capabilities of the remote maintenance equipment. This determination must occur at the design stage.

The types of cell penetrations include, but are not restricted to, air locks, pass-throughs, and bag-in ports to allow various types and sizes of materials and equipment to enter or leave a cell; service plugs or penetrations to provide a path for utilities and instrumentation; and special or standard sleeves to accommodate manipulators, windows, periscopes, or other control equipment. The trend in recent designs has been to make all utility penetrations removable for maintenance or replacement. This is a distinct deviation from past designs wherein many of these utility pipes and electrical conduits were cast into the concrete wall or otherwise permanently sealed into the confinement barrier. In addition to the intended function, the penetration must be designed to prevent the dispersal of contaminants from the cell as well as provide adequate shielding against penetrating radiation. Temporary or portable seals or shields may be required during the maintenance operation if the procedure or method entails a breach of the sealing or shielding.

The design of the penetration must also recognize the presence of a pressure differential between clean areas and contaminated areas and, in particular, during a maintenance operation on the penetration. This differential is provided and maintained to prevent the spread of contamination to any clean area in the event of a leak or other breach by maintaining a flow of air from a clean area into a contaminated zone. The maintenance procedure, which may involve opening the sealing penetration, must reduce the time and quantity of opening to prevent back diffusion and out-leakage and avoid overloading the mechanisms that maintain the pressure differential. Generally, to prevent back diffusion, an air flow velocity of 30 m/min (100 ft/min) must be maintained. The force against the sealed opening due to the differential pressure must also be accommodated.

The routing of utilities from a service plug or penetration is sometimes accomplished via a remote-disconnect jumper between the wall penetration and the destination. The design must consider the accessibility of the remote disconnects on the wall penetration end of the jumper and its manipulation with the available maintenance tools. Another common occurrence with penetrations is the replacement of elastomeric seals due to damage or deterioration. The design for this operation should be fabricated and tested in a mockup utilizing the intended tools prior to incorporation in the final design for the facility. Section 7 covers detailed design and selection considerations of connectors used in hot cells.

3. REMOTE MAINTENANCE SYSTEMS

To implement the remote maintenance philosophy effectively, it is imperative that designers of remotely maintained equipment first understand the capabilities and limitations of the remote maintenance system that will be used to service the in-cell equipment. With this information, the equipment designers can then, and only then, design reliable remote handling features into the equipment.

This section briefly describes remote handling systems that are, or could be used, in hot-cell facilities to provide for the maintenance of in-cell equipment. A variety of system types are described that are typically incorporated in a facility. However, based on the facility, its mission, and the equipment to be serviced, the actual systems employed may only be a subset of the types described here. For example, a facility may be equipped with both mobile manipulator systems (servomanipulators) and fixed, through-the-wall manipulators (master/slave manipulators), or it may only include one of these types. This, of course, greatly affects the design features of the serviced equipment and must be taken into account by the designer. In addition, it is recommended that equipment designers receive first-hand experience operating the type of system(s) (or similar systems) that will be used to service the equipment being designed. In doing so, the designer will better understand the general design guidelines presented in the previous sections and will also be better equipped to be innovative with unique situations and avoid the problems of "cookbook" design.

The primary in-cell manipulators are usually servotypes mounted on an overhead transporter bridge and telescoping mast and trolley assembly. The manipulator transporter provides positioning of the manipulator slave and television cameras at any point adjacent to the in-cell equipment to perform a repair or servicing task. The use of such systems greatly reduces the number of shielded-window workstations as found in existing fuel reprocessing facilities. Through-the-wall mechanical master/slave systems may be provided at a few shielded-window workstations. Overhead bridge cranes are provided for lifting heavy equipment items and complete process modules. Bridge cranes are also used to perform maintenance operations on equipment inaccessible to the manipulator by using impact wrenches suspended from the load hooks. The manipulator transport bridge is usually maintained by this method. Bridge cranes and manipulator systems are each provided with television and lighting systems incorporated into the overall viewing system. Manipulators are used to operate various tools in performing repair tasks. The mobile systems are controlled from a centralized control room which usually includes a manipulator operator and a second operator to control the transport and crane bridges and to assist the manipulator operator as necessary. Components of the Advanced Integrated Maintenance System (AIMS), a remotely maintainable system developed at ORNL, are illustrated in Figs. 3.1 and 3.2.

ORNL–DWG 85–6911B

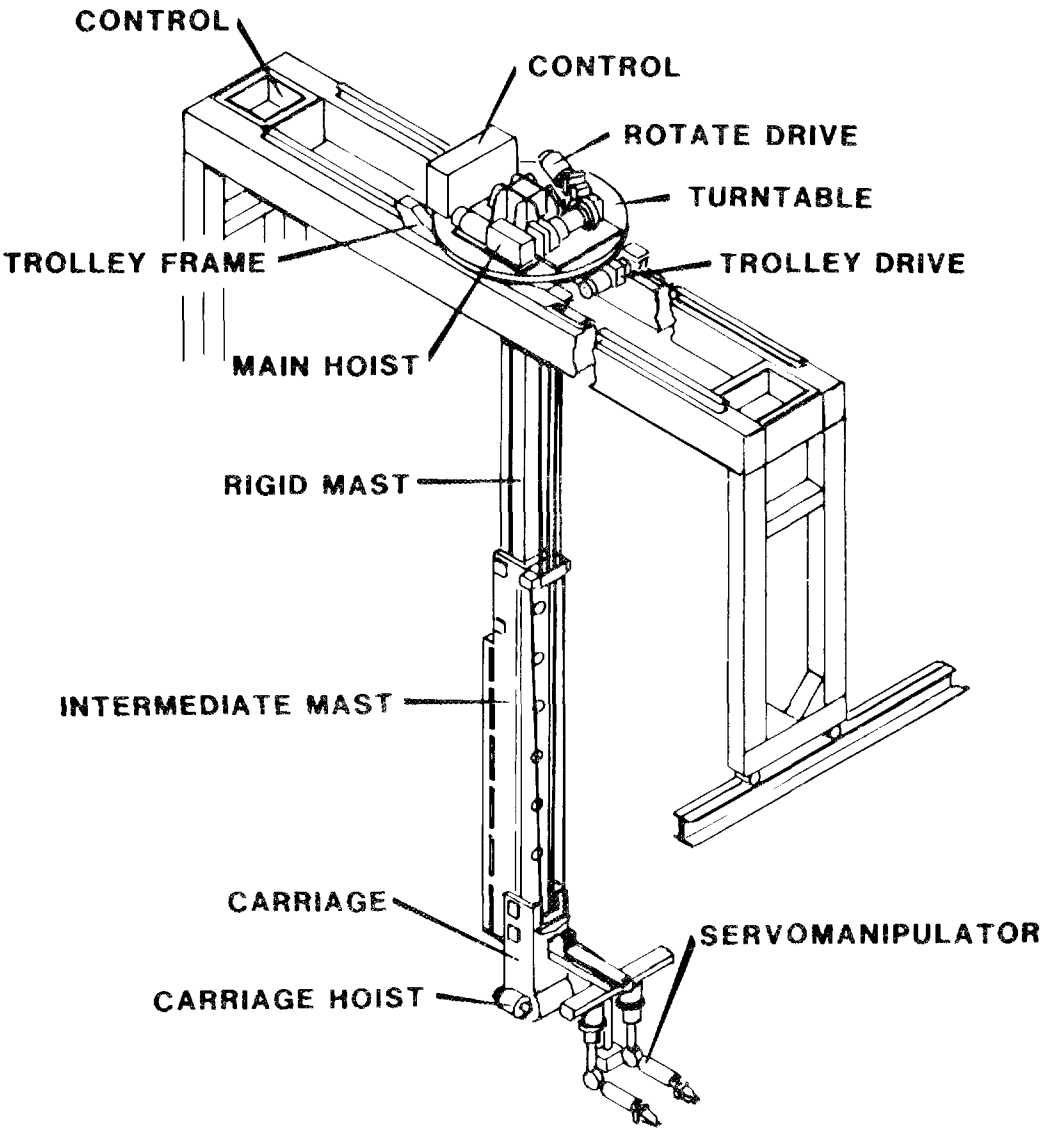

Fig. 3.1. AIMS servomanipulator transporter.

3.1 SERVOMANIPULATOR SYSTEMS

The servomanipulator system consists of a pair of multijointed slave arms (in-cell) which reproduce the movements of a pair of master control arms (out-of-cell) to provide man-like dexterity in the remote environment. The slave arm joints are driven by servomotors that follow the movement of the master arm joints under the control of an operator. The master arms are usually kinematic replicas of the slaves. More advanced systems utilize closed-loop digital control systems to enhance operating flexibility and performance and may also be capable of performing simple, structured tasks under total computer control (telerobotic operation). However, a man in the control loop (master-arm-type operation) is usually necessary due to the

ORNL–DWG 86–6706R

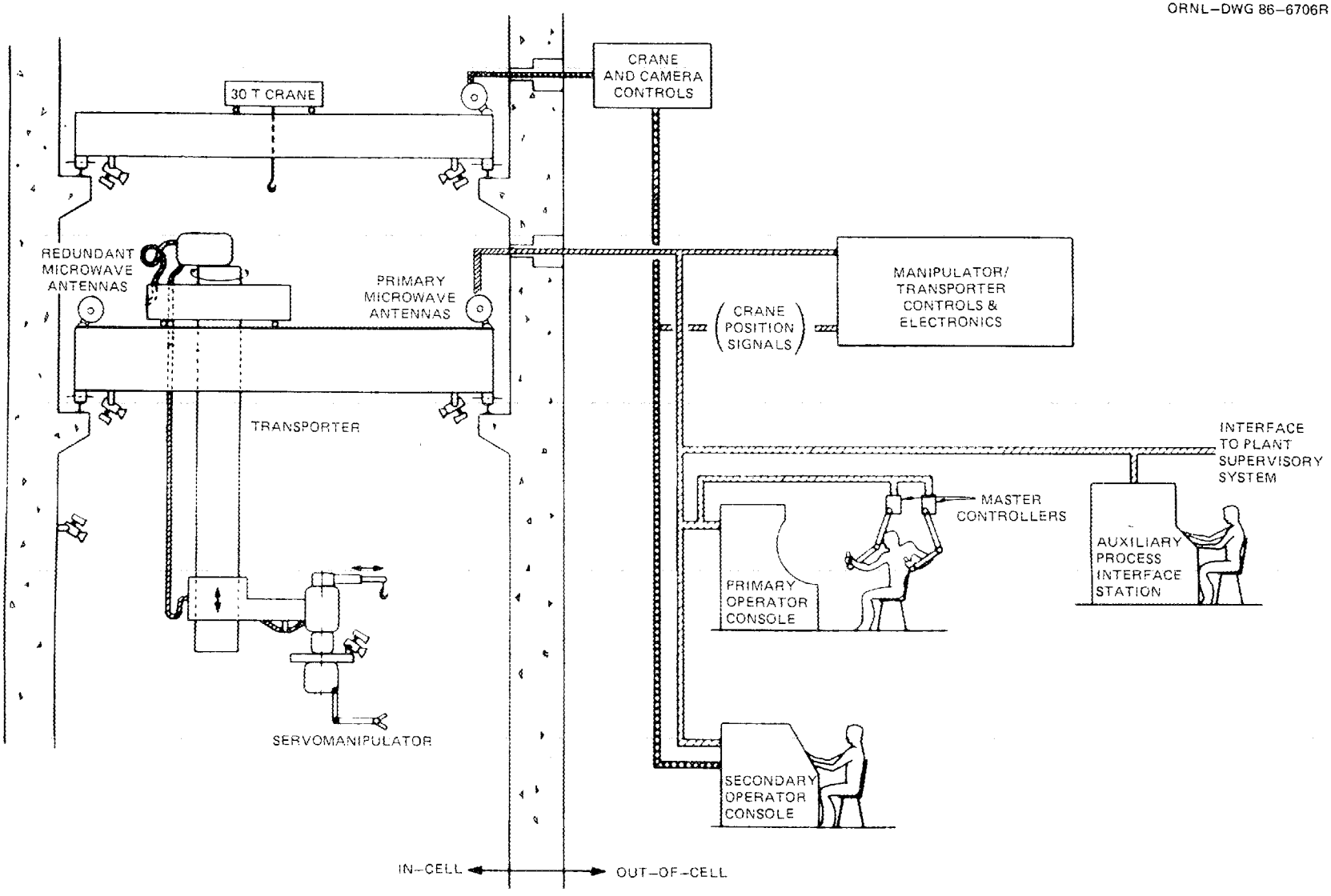

Fig. 3.2. The advanced integrated maintenance system.

complex, unstructured nature of the tasks. Retrieving a tool from a scabbard is an example of a task which can be structured for total computer control provided the tool is precisely positioned in the scabbard. Servomanipulators may also provide force-reflection to the operator at the master control station using a closed-loop control technique with servomotors to drive the master arm joints in addition to the slave joints. Force-reflection is very helpful when viewing is obscured or when the component being operated is capable of being damaged by the full-force capabilities of the manipulator slave.

Operator viewing of the in-cell work site is provided by closed-circuit television (CCTV) cameras mounted to the slave package. The cameras typically have multiple joint positioning capabilities and lens controls for viewing optimization and to enhance depth perception. Strategically placed facility and bridge-mounted cameras supplement these views but are primarily used for positioning the manipulator at the work site and for performing bridge crane operations. A hoist system may be included on board the slave for lifting component modules. Examples of two different manipulator systems are described in the following sections.

3.1.1 ORNL Advanced Servomanipulator (ASM)

The ASM is a bilateral force-reflecting master/slave servomanipulator designed by ORNL for use in advanced nuclear fuel reprocessing facilities. The ASM slave is shown in Figs. 3.3 and 3.4. A unique feature of the ASM slave is its modular construction to facilitate remote maintenance using a companion manipulator for its own repair by modular replacement in order to increase system availability and reduce radiation exposure to personnel. The system is totally digitally controlled with force-reflecting feedback to the master operator. The force-reflection ratio from the slave to the master is variable by the operator from 1:1 to 16:1 (master arm loading is adjustable between 1 and 1/16 of the slave arm loading). The slave arm has a continuous load capacity of 16 kg (35 lb) and a peak capacity of 23 kg (50 lb). Threshold force-reflection, the minimum detectable slave arm loading which can be sensed at the master control station, is about 1 kg (2 lb). Master-to-slave arm control is in real time with no detectable lag up to end-effector slewing velocities of 1 m/s (3 ft/s).

The ASM slave system includes three CCTV cameras and a 227-kg (500-lb) capacity hoist. Two of the three cameras are mounted above the slave arms on positioning arms with four degrees-of-freedom (D.F.), including the pan-and-tilt mechanisms and have standard motorized lens controls (zoom, focus, and iris). The third camera is mounted below the slave torso on a 2 D.F. pan-and-tilt mechanism and also has motorized lens controls. The elevation of the cameras cannot be adjusted. Lights are provided on the cameras. The hoist is mounted on a telescoping boom that allows adjustment of the load hook orthogonal to the slave torso.

The ASM arms have an anthropomorphic stance also known as an elbows-down configuration. This configuration is best suited for working on equipment items that are vertically stacked on racks where the arm must reach horizontally into the racks. However, equipment designers must take into account the ability to view such items in addition to their accessibility by the arm. The elbows-up configuration, found on all mechanical master/slave systems and earlier design servomanipulators, is best suited for working on equipment mounted in a horizontal plane. An example of an elbows-up system is found in the following section.

3.1.2 Central Research Laboratories (CRL) Model M-2 Servomanipulator

The CRL model M-2 servomanipulator was jointly developed by CRL and ORNL and is used for evaluating servomanipulator-based remote maintenance of hot-cell equipment at

ORNL-DWG 84-8302

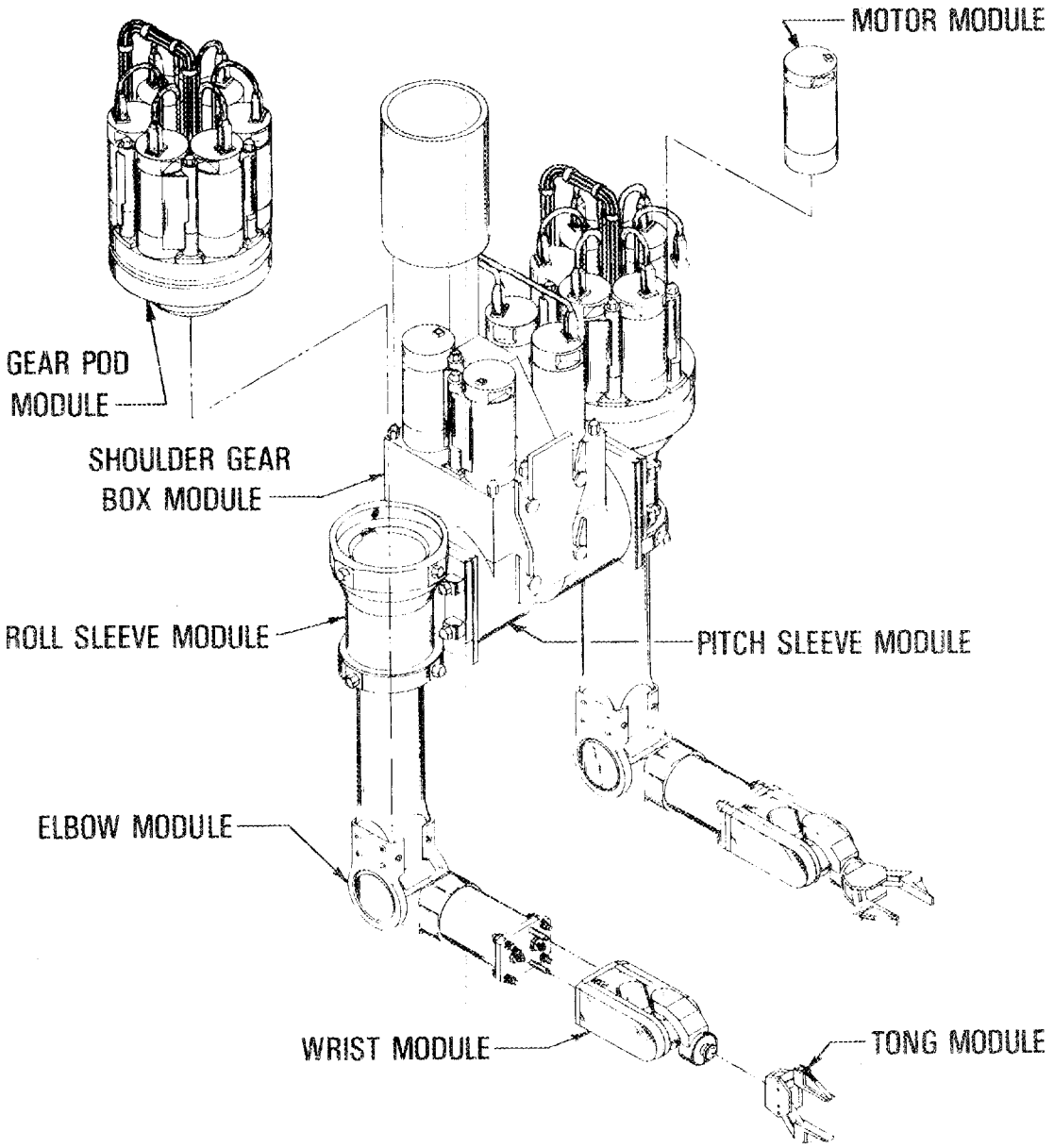

Fig. 3.3. Advanced servomanipulator.

ORNL's Remote Operations and Maintenance Demonstration Facility. The model M-2 was the first totally digitally controlled servomanipulator and is a bilateral force-reflecting master/slave system. The M-2 development preceded the ASM and was completed in early 1983 (see Figs. 3.5 and 3.6 for the M-2 slave and master control station). Note that the arms are in an elbows-up configuration and are thus best suited for working above horizontal surfaces, although they are more than adequate for working with vertical surfaces provided the components are not mounted very far in and under other equipment items.

ORNL-DWG 83-11056A

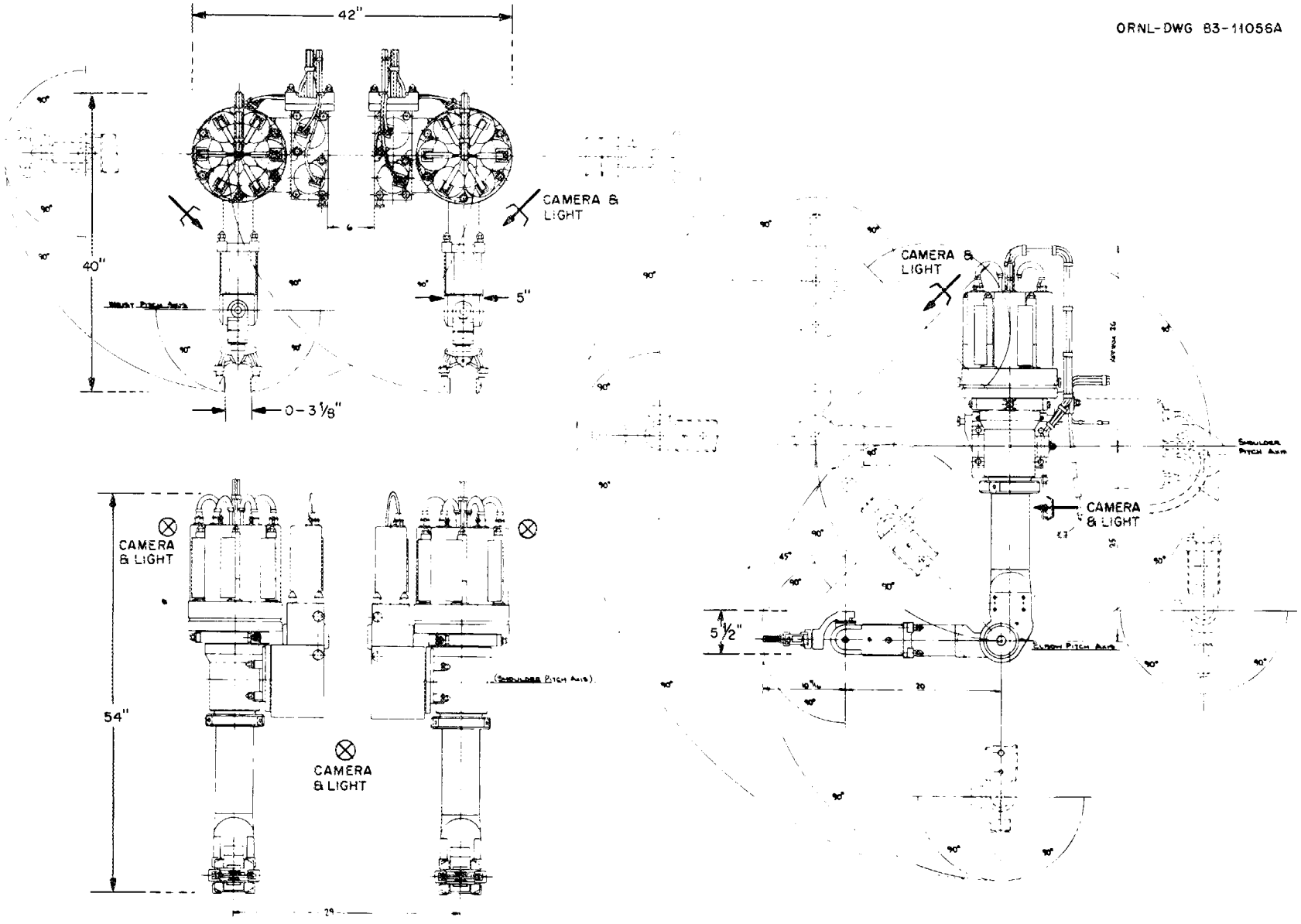

Fig. 3.4. Servomanipulator motions.

ORNL-PHOTO 3549-83B

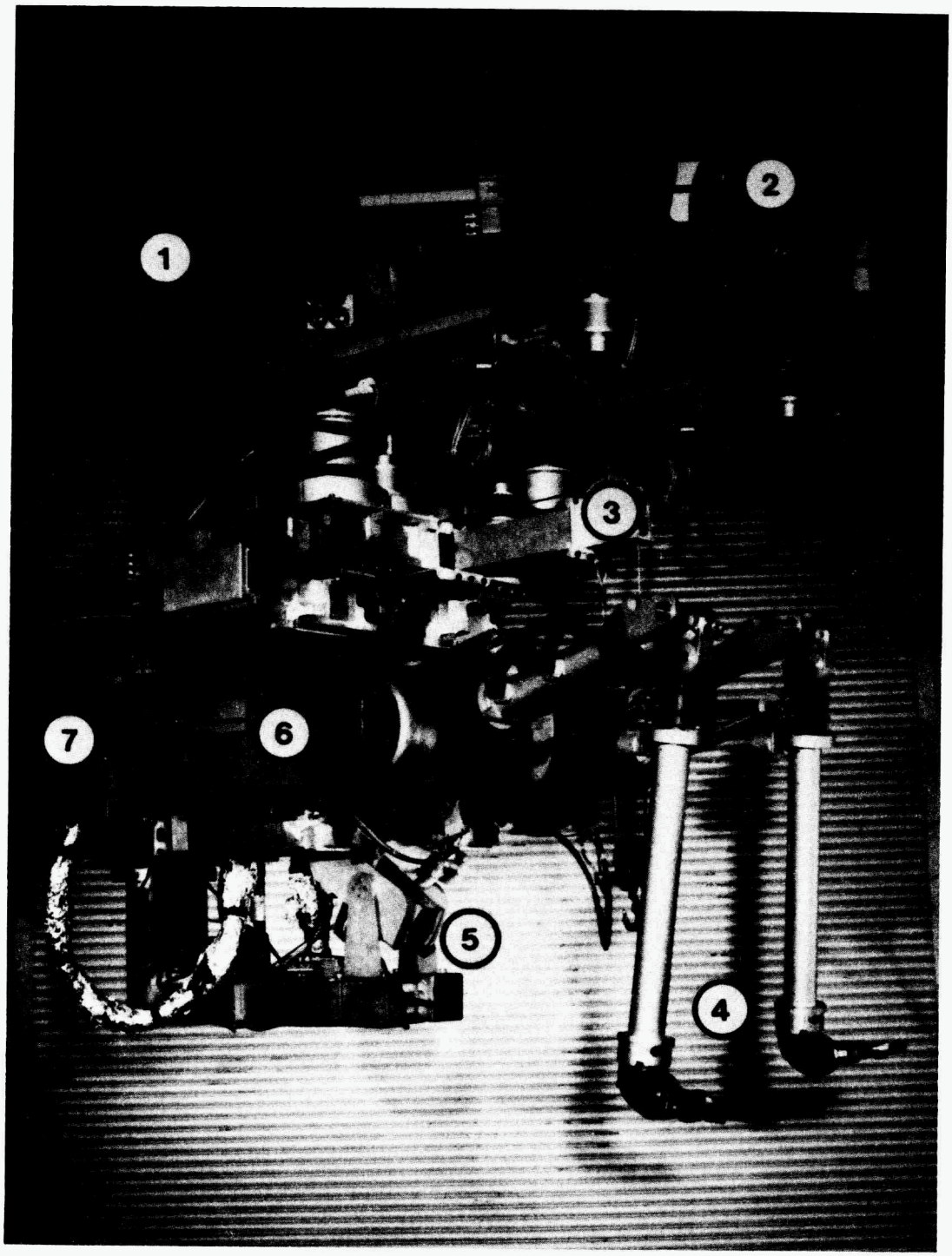

Fig. 3.5. The model M-2 slave – (1) transporter interface, (2) movable overhead cameras, (3) auxiliary hoist, (4) slave arms, (5) fixed lower camera, (6) servomotor housing, and (7) control electronics rack.

ORNL-PHOTO 5013-83B

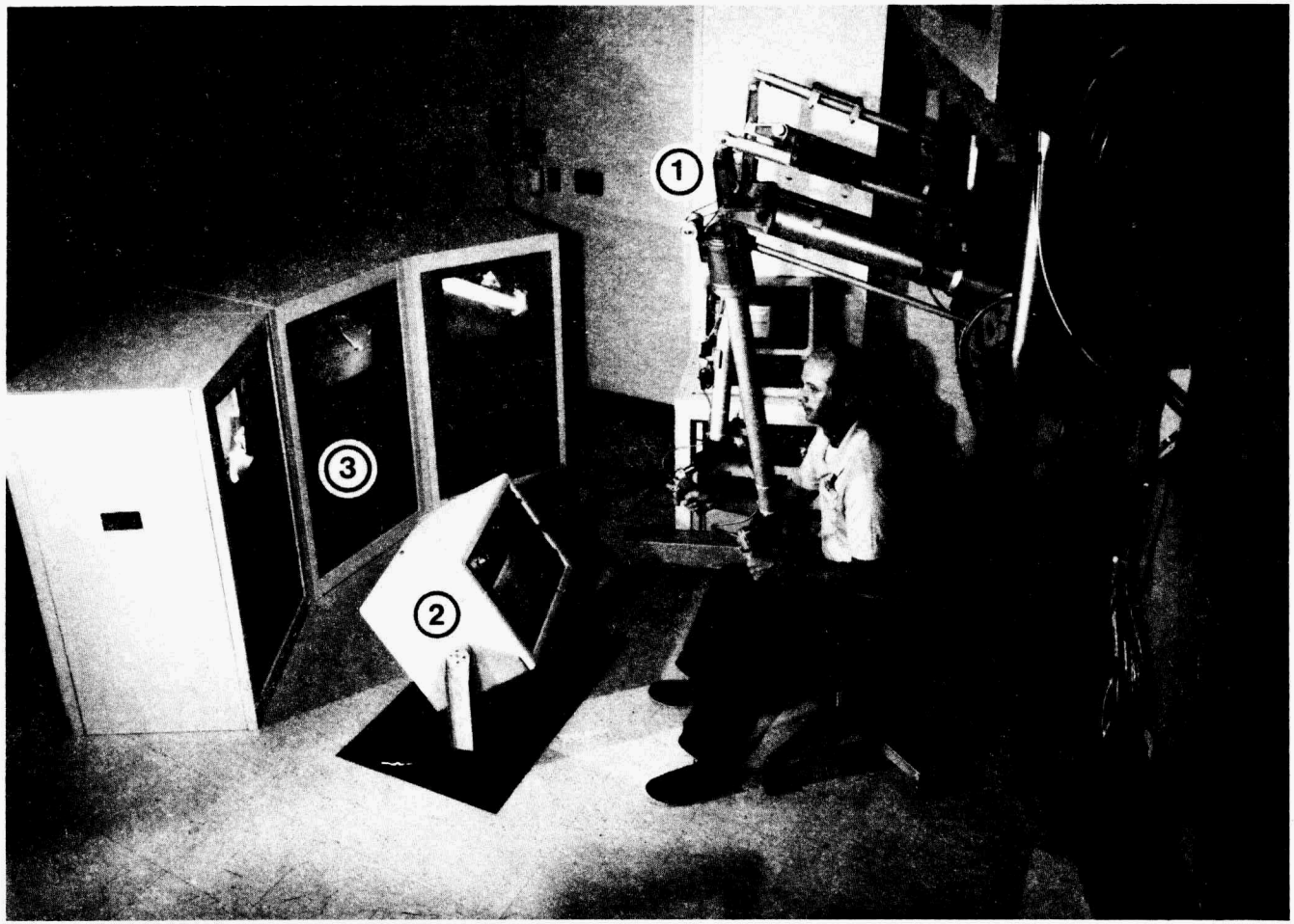

Fig. 3.6. The model M-2 master control station.

Each slave arm has six joints plus a tong-type grip end-effector and is capable of continuously handling items weighing up to 23 kg (50 lb). Peak capacity of each slave arm is 46 kg (100 lb). The master control arms are kinematically similar to the slave arms and feature real-time control of the slave, up to end-effector tip slewing velocities of 1.5 m/s (5 ft/s). Threshold force-reflection of the system is about 1/2 kg (1 lb). Force-reflection ratio of the master control arms loading to the slave arm loading can be varied between 1 and 1/8 of slave arm loading value. Unlike the ASM, the M-2 is not remotely maintainable and must be repaired by hands-on techniques. This is primarily due to the arms' conventional cable and pulley-drive design. The M-2 slave arm joint motions are illustrated in Fig. 3.7. The performance and operating characteristics of both the slave and master arms are presented in Table 3.1. Incorporated in the M-2 slave package are three on-board CCTV cameras and a 227-kg (500-lb) capacity hoist. The two overhead cameras have four positioning degrees-of-freedom and standard motorized, lens controls. The lower camera is fixed and uses a nonmotorized wide-angle lens. The elevation of these cameras is not adjustable. The hoist boom is fixed and cannot be adjusted.

ORNL–DWG 87–5543

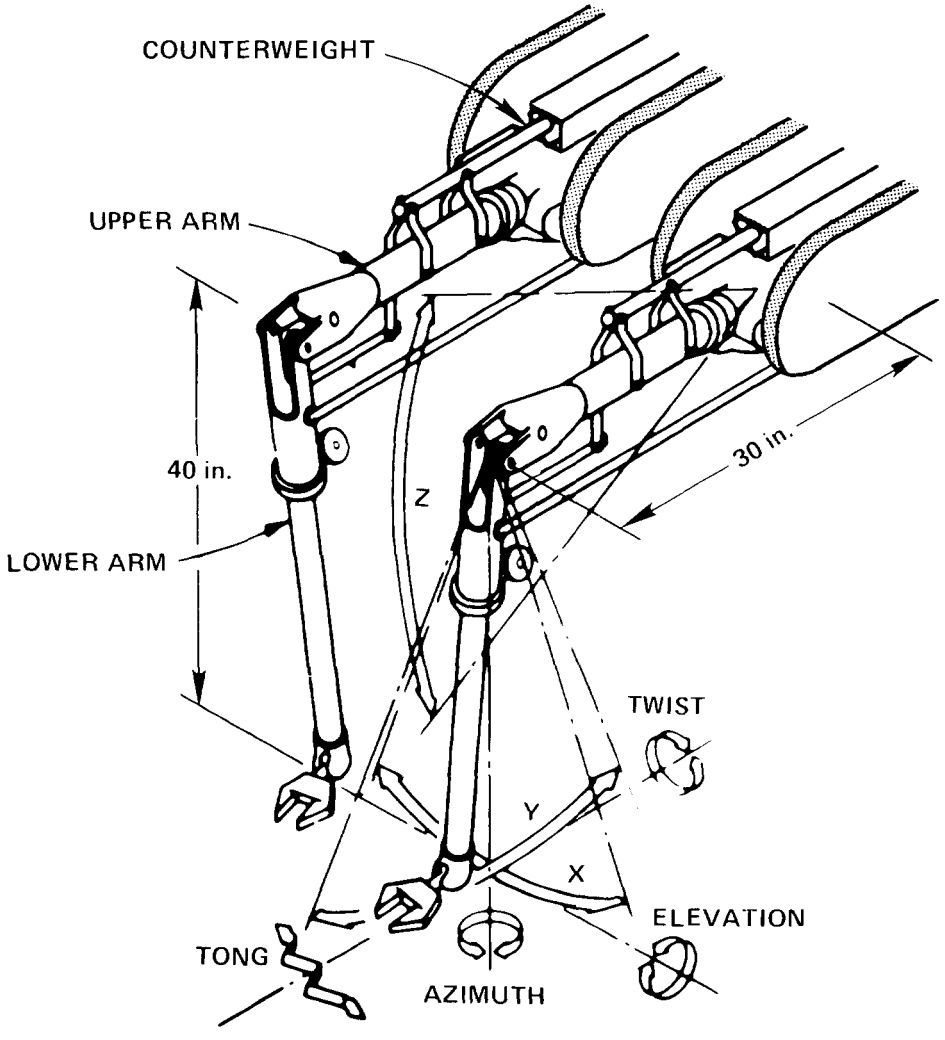

Fig. 3.7. CRL model M-2 servomanipulator motions.

Table 3.1. Performance and operating characteristics of model M-2 servomanipulator

	X (shoulder roll)	Y (elbow pitch)	Z (shoulder pitch)	AZ (yaw)	Elevation (pitch)	Twist (roll)	Tong
Master maximum torque or force	111 N	111 N	111 N	17 N·m	15 N·m	12 N·m	111 N
Slave maximum continuous operating torque or force	222 N	222 N	222 N	56 N·m	47 N·m	40 N·m	445 N Squeeze
Peak slave torque or force	445 N	445 N	445 N	108 N·m	90 N·m	77 N·m	667 N Squeeze
Maximum no-load linear or angular velocity	>1.5 m/s	>1.5 m/s	>1.5 m/s	>344°/s	>400°/s	>344°/s	>1.0 m/s
Slave arm motion range	±45°	±45°	±45°; 255° total with indexing	±210°	+40°; -125°	±180°	Tong 0.08 m; handle 0.07 m

3.2 MECHANICAL MASTER/SLAVE MANIPULATORS

Mechanical master/slave manipulators may be part of the remote operating and maintenance equipment provided at selected workstations along the process cell walls. They are used in conjunction with shielded windows to perform light-duty remote handling tasks over a limited range. Each window workstation is equipped with a pair of master/slave manipulators. These manipulators operate through a sealed through-the-wall mounting, which restricts coverage to the limit of the slave arm reach. The general design features are shown in Figs. 3.8, 3.9, and 3.10. The assembly consists of three functional components: a master arm, a slave arm, and a seal-tube assembly. Any of these can be exchanged without breaching hot-cell containment. The performance data, from CRL, on the specific equipment are given in Table 3.2.

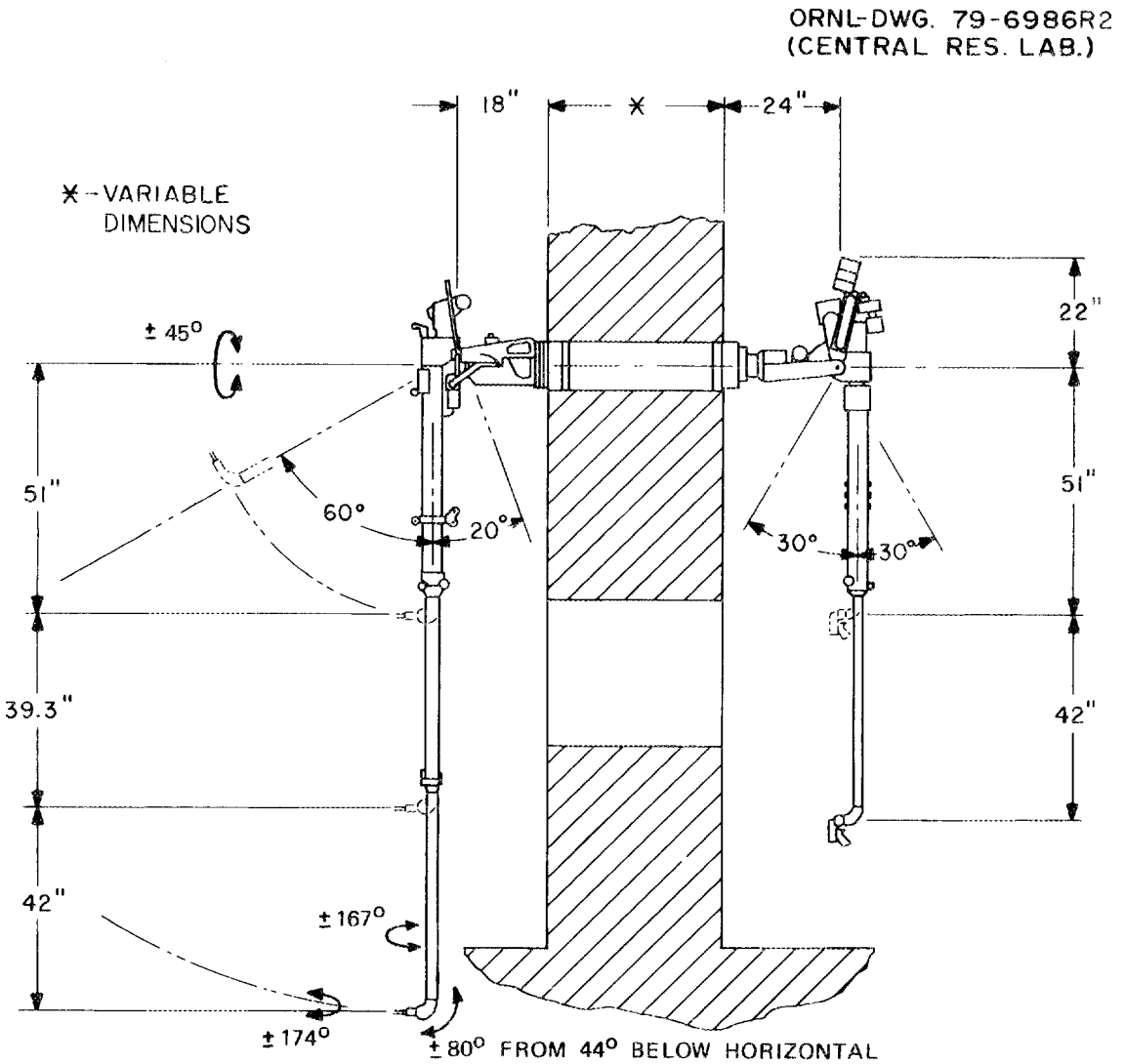

Fig. 3.8. CRL model J master/slave manipulator, side elevation.

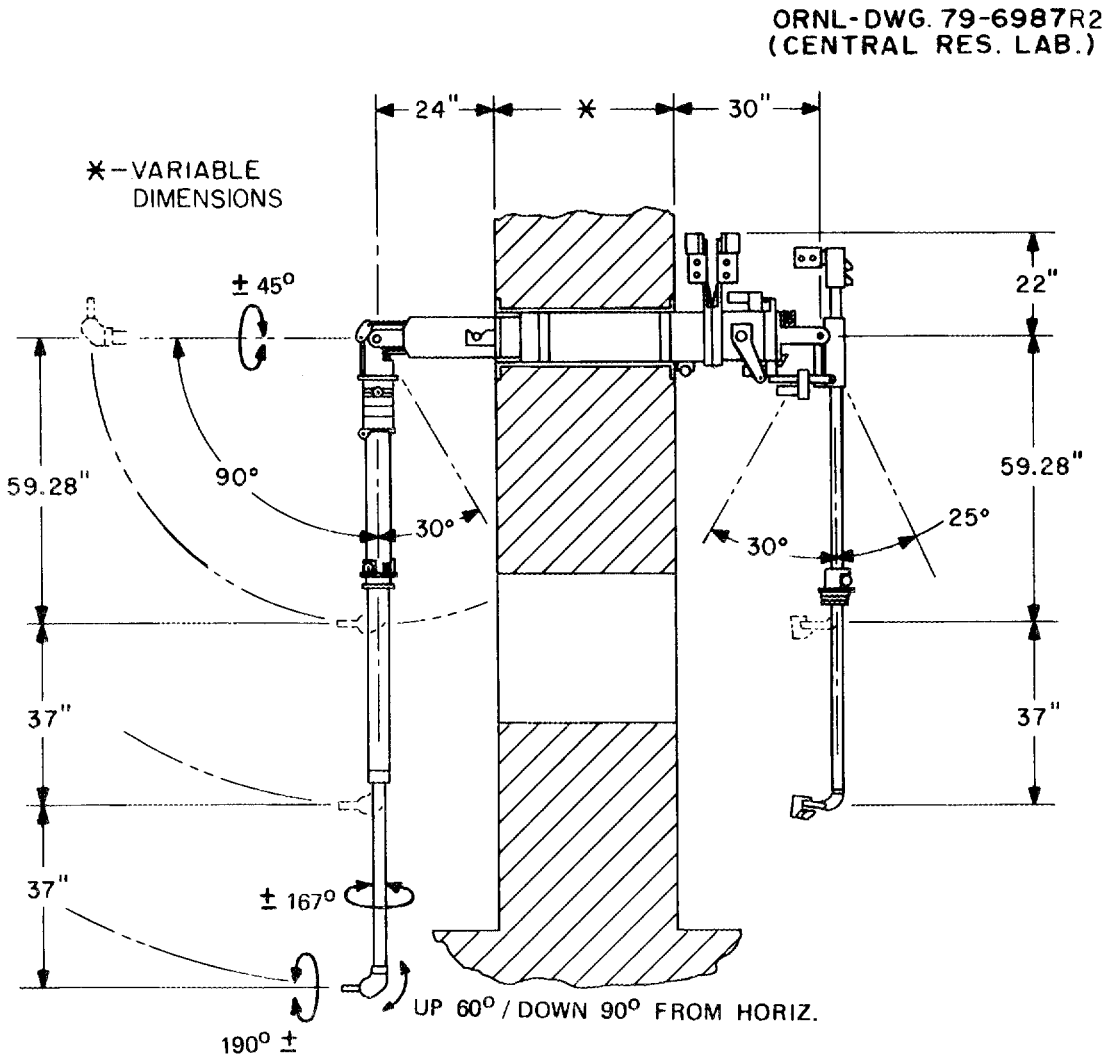

Fig. 3.9. CRL series 50 master/slave manipulator, side elevation.

3.3 BRIDGE CRANES

Overhead bridge-mounted cranes are used for transporting and positioning of heavy loads throughout the process cell areas and for performing some maintenance operations using impact wrenches suspended from the load hooks. A crane system consists of the bridge, trolley, hoist, and means for transmission of power and control signals. The cranes are remotely controlled from the maintenance control center. The CCTV cameras mounted on the bridge give close-up viewing of lifting operations.

The cranes have the capacity for transporting the largest equipment assembly in the cell and the spacial coverage necessary to transport any piece of in-cell equipment to a transfer port or repair area. The bridge cranes must be provided with remotely maintainable design features for recovery from all potential failure events.

ORNL-DWG. 79-6988R

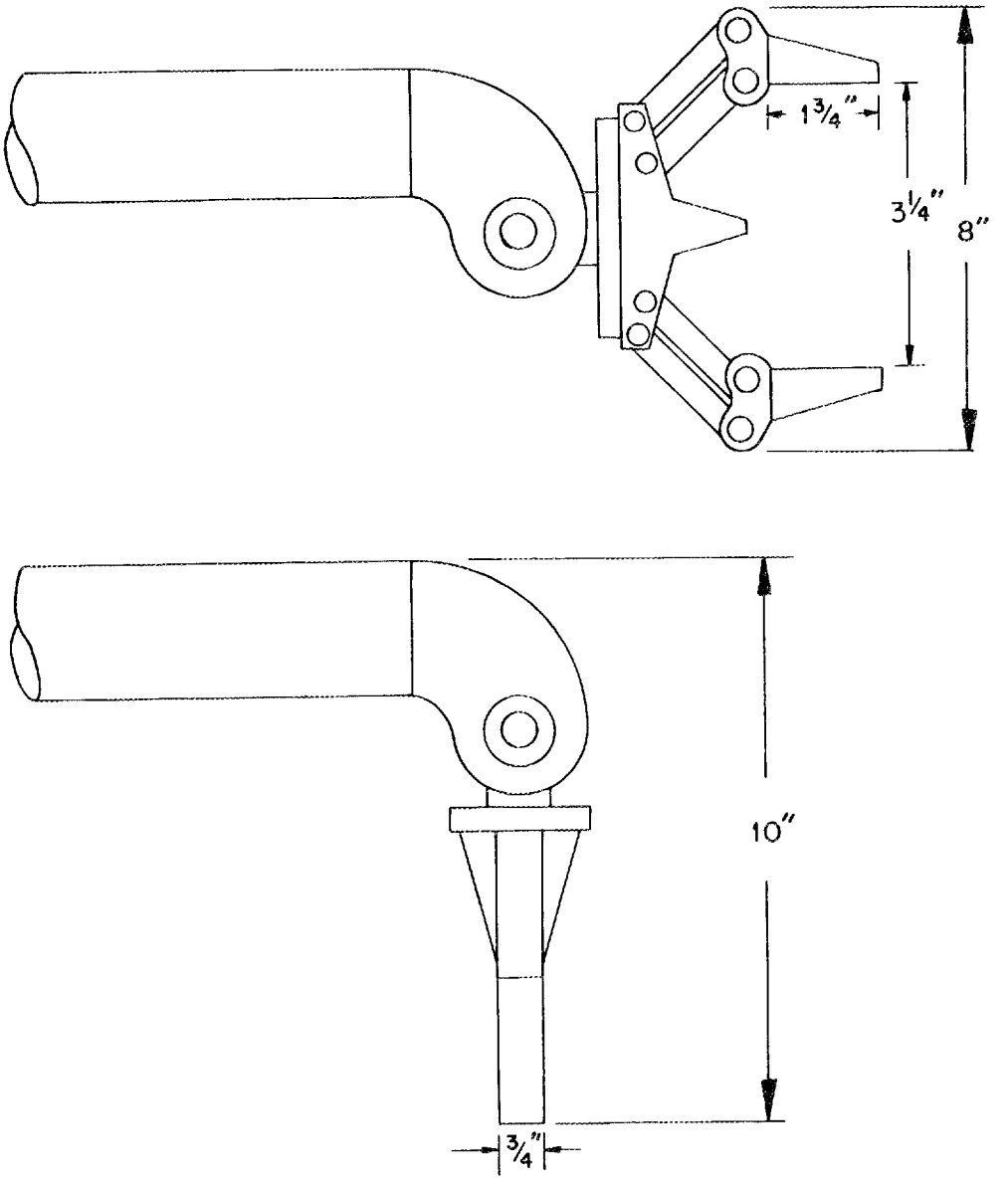

Fig. 3.10. CRL model J, grip hand.

3.4 LIGHTING

The in-cell lighting system provides fixed lights for general cell illumination and for intermittent duty at window stations and supplementary lights on mobile handling equipment.

Table 3.2. Load capacities of the CRL master/slave manipulator[a]

Capabilities	Model J, standard duty, extended reach	System 50, heavy duty, extended reach
Handling capacity at tong tips		
X motion, lb	20	50
Y motion, lb	20	50
Z motion, lb	20	50
Elevation rotation, lb/in.	125	300
Azimuth rotation, lb/in.	150	300
Twist rotation, lb/in.	120	300
Tong opening, in.	3.25	3.25
Grip force, lb	20	150
Handling capacity with a load hook accessory, lb	60	120

[a]Courtesy of Central Research Laboratories, Inc., Red Wing, Minn.

3.4.1 General Hot-Cell Lighting

The cell lighting system provides sufficient illumination for viewing and performing remote operations within the cells. The system includes light fixtures closely placed around the viewing windows and an emergency light fixture located at each workstation/rack. All fixtures use commercially available lamps. Circuit-breaker panel boards and control switches are located outside the cell.

3.4.2 Auxiliary Cell Lighting

Lighting is provided on the in-cell maintenance system. This allows system operation independent of the facility lighting and also allows for the use of controlled lighting to enhance depth perception. The lighting arrangement selected is one that can best enhance the perception of depths in a televised scene achieved through the use of both bright and diffuse lights offset from the camera line of sight, in conjunction with a backlight to enhance the feeling of depth.

3.5 CLOSED-CIRCUIT TELEVISION

The primary means for viewing remote operations in the process cell is through CCTV systems. In-cell equipment includes camera-mounting structures and in-cell cabling. Viewing monitors and camera controls are located in the maintenance control room as shown in Fig. 3.11.

Viewing for maintenance operation using the in-cell maintenance system is via CCTV cameras mounted on the mobile manipulator systems and the overhead bridges. These cameras have remotely operated pan and tilt positioning as well as motorized zoom lenses. Wall-mounted CCTV cameras provide an overview of all equipment in the cell but may supplement cameras used for maintenance operations.

ORNL-PHOTO 0378-86

Fig. 3.11. Control-room viewing monitors and camera controls.

Standard-resolution black-and-white television systems are used for general viewing. High-resolution black-and-white or color equipment may be used for special purposes.[4] Cameras mounted on movable support stands may be used to provide additional viewing flexibility.

3.6 SHIELDING WINDOWS

A shielding window is an optically transparent material having roughly the same radiation protection properties as the surrounding shield; the windows will be glass. A shielding window assembly consists of a wall tank or liner and one or more pieces of glass. The interface surface reflections from the spaces between the pieces of glass are almost completely removed by filling the space between the plates with mineral oil having a refractive index approximately equal to that of glass. However, because of the thickness of the window, distortion and blind areas are present. Figure 3.12 shows the useful viewing area of typical glass windows. The area that surrounds, or is outside of the normal viewing area, distorts objects severely (i.e., a round object will appear to be elliptical).

3.7 PERISCOPES

A periscope is a viewing device that uses mirrors or prisms to direct light rays so that a user can see a given field from a particular position or location where observation would otherwise be impossible. Periscopes are available in monocular, binocular, and stereoscopic configurations. These come equipped with lenses of different resolving powers for telescopic viewing (Fig. 3.13). Periscopes provide high-quality viewing, so they are frequently used to photograph items inside the hot cell.

3.8 SUPPLEMENTARY VIEWING DEVICES

Conventional binoculars and monoculars may be used in conjunction with windows for detailed viewing with improved depth perception. They can be placed on a fixed mount in front of the window.

Spotting-telescopes and opera glasses can also be used with a viewing window to obtain additional perspective.

Borescopes are used for special viewing. They are modified periscopes which have been optically lengthened by the addition of extender lenses that magnify the object closest to the object lens.

In-cell mirrors can be positioned to supplement views provided by other devices.

3.9 AUDIO SYSTEMS

Microphones are used to assist operators with audio feedback while moving equipment or performing remote maintenance operations in a hot cell. The sounds improve the "feel" of the activity. The microphones may be either fixed or mobile. Unidirectional microphones are frequently attached to CCTV cameras. Microphones are also used to monitor sounds of functioning equipment to compare normal versus abnormal operations.

3.10 TOOLS

The requirement for special tools for individual equipment items should be minimized by using standardized maintenance features outlined in the previous sections of this guide. Restriction of special tools, which also includes lift fixtures, is important since any tool entering a cell environment must be designed for manipulator/crane use, for special environmental conditions in the cell, for cell storage, and for eventual decontamination or disposal. The

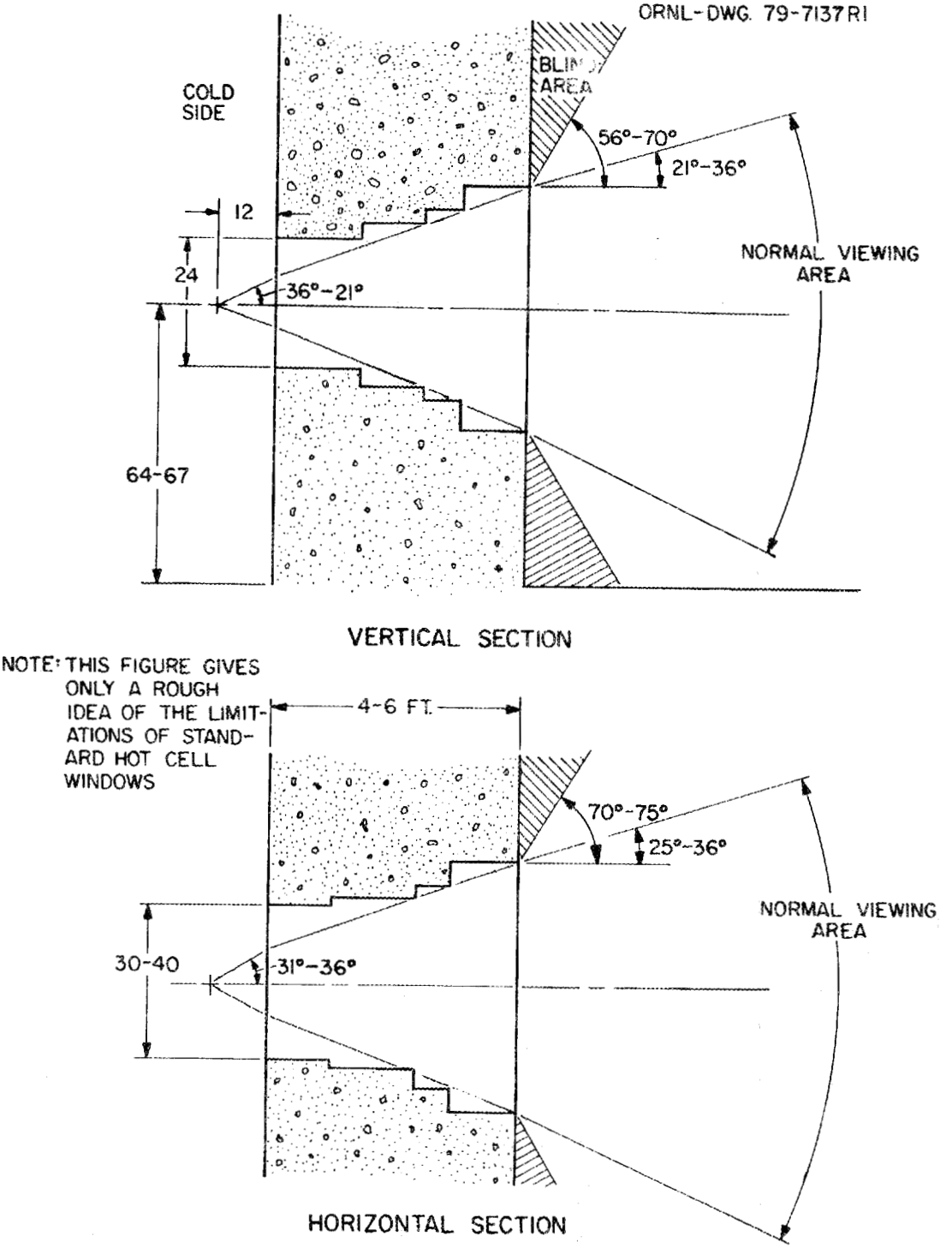

Fig. 3.12. Shielding window viewing areas.

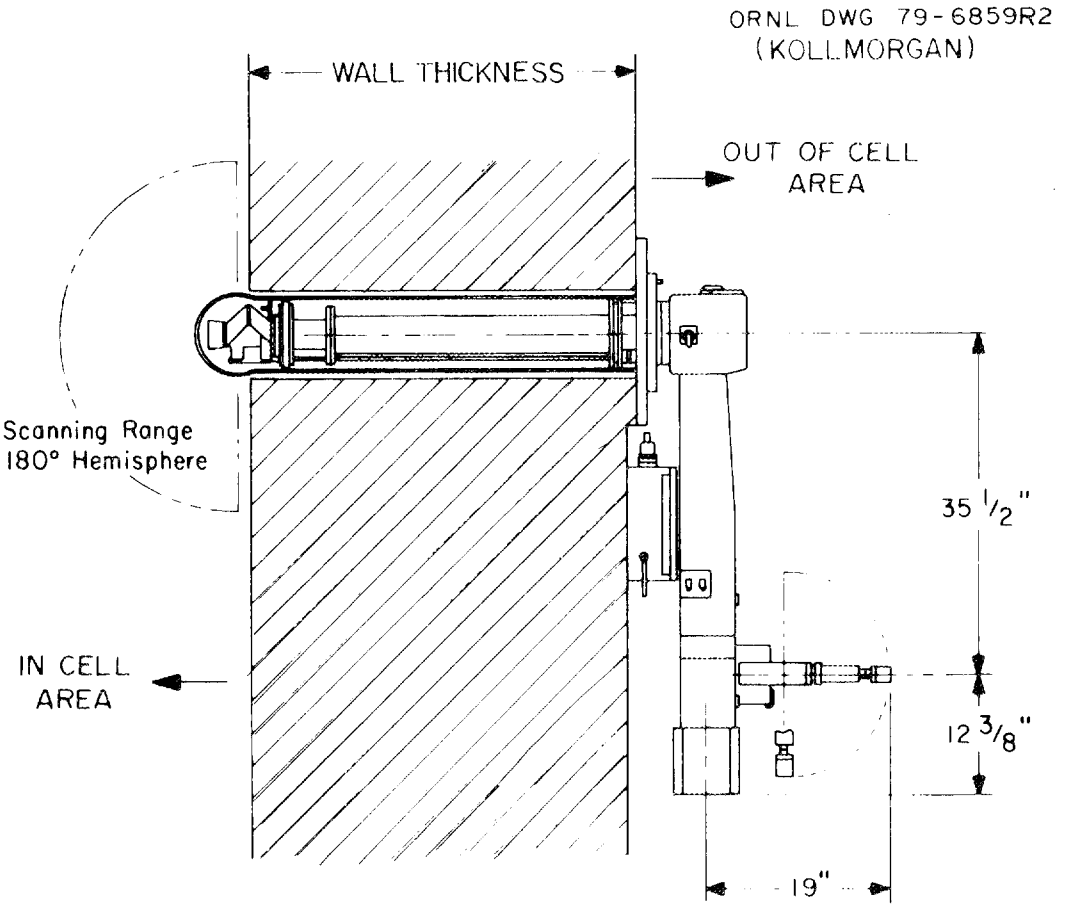

Fig. 3.13. Wall periscope.

standardization of equipment designs inherently minimizes the number and types of tools needed. Equipment designers must ensure that component modules can be removed and replaced using standard hot-cell tools where possible.

The general approach at ORNL has been to use commercially available tools adapted to manipulator or crane hook use through special handling features. Specific types of tools in this category can be operated manually, electrically, or pneumatically.

Tools commonly used with manipulators include impact wrenches, ratcheting tubing wrenches, standard ratchet wrenches, torque wrenches, and nut-runners. On a less frequent basis, tools such as hammers, pry-bars, saws and grinders, bolt cutters, and nut-splitters are also used. Lifting eyes, shackles, and wire- or chain-slings are examples of rigging items that can be handled by manipulators. Fixed lifting bails or eye-bolts should be provided for component modules where possible. For examples of various tools adapted for hot-cell maintenance use, see Figs. 3.14 through 3.17.

Impact wrenches in nominal 10- to 20-mm (3/8- to 3/4-in. U.S. standard) drive sizes are used with manipulators and provide 170 to 340 N·m (125 to 250 ft-lb) maximum torque,

ORNL-PHOTO 5964-86A

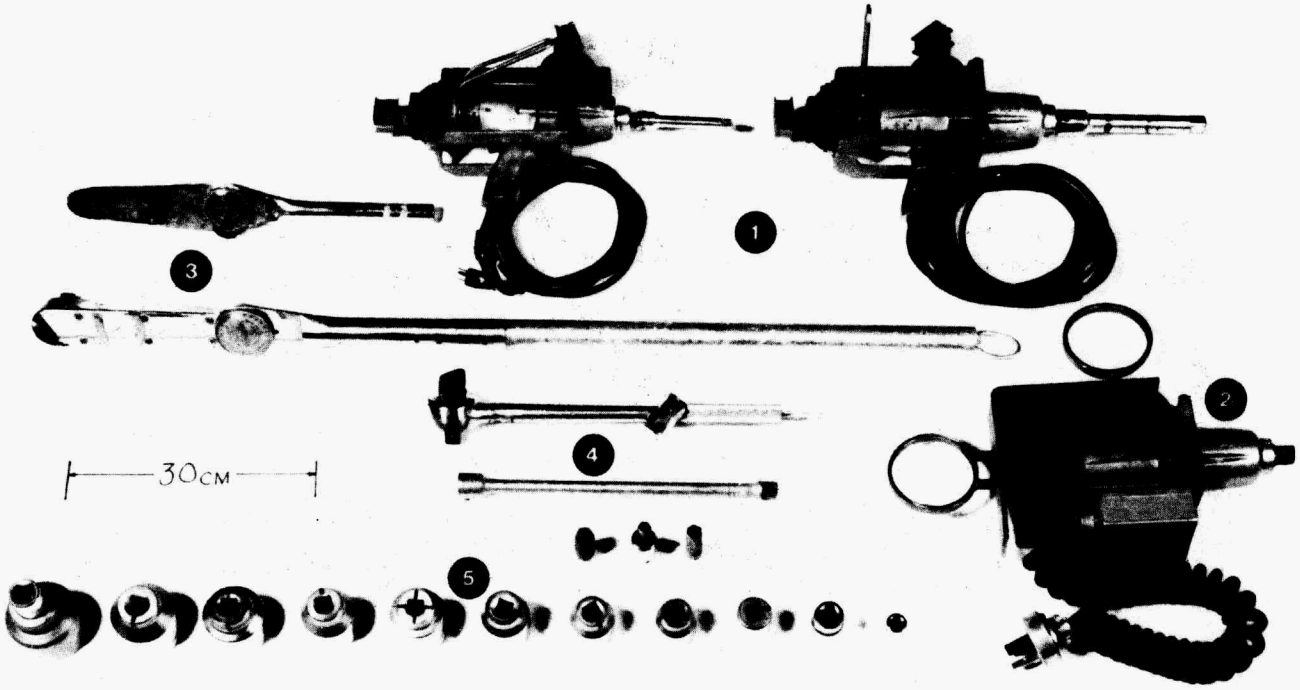

Fig. 3.14. Tools adapted for hot-cell use.

ORNL-PHOTO 5693-86A

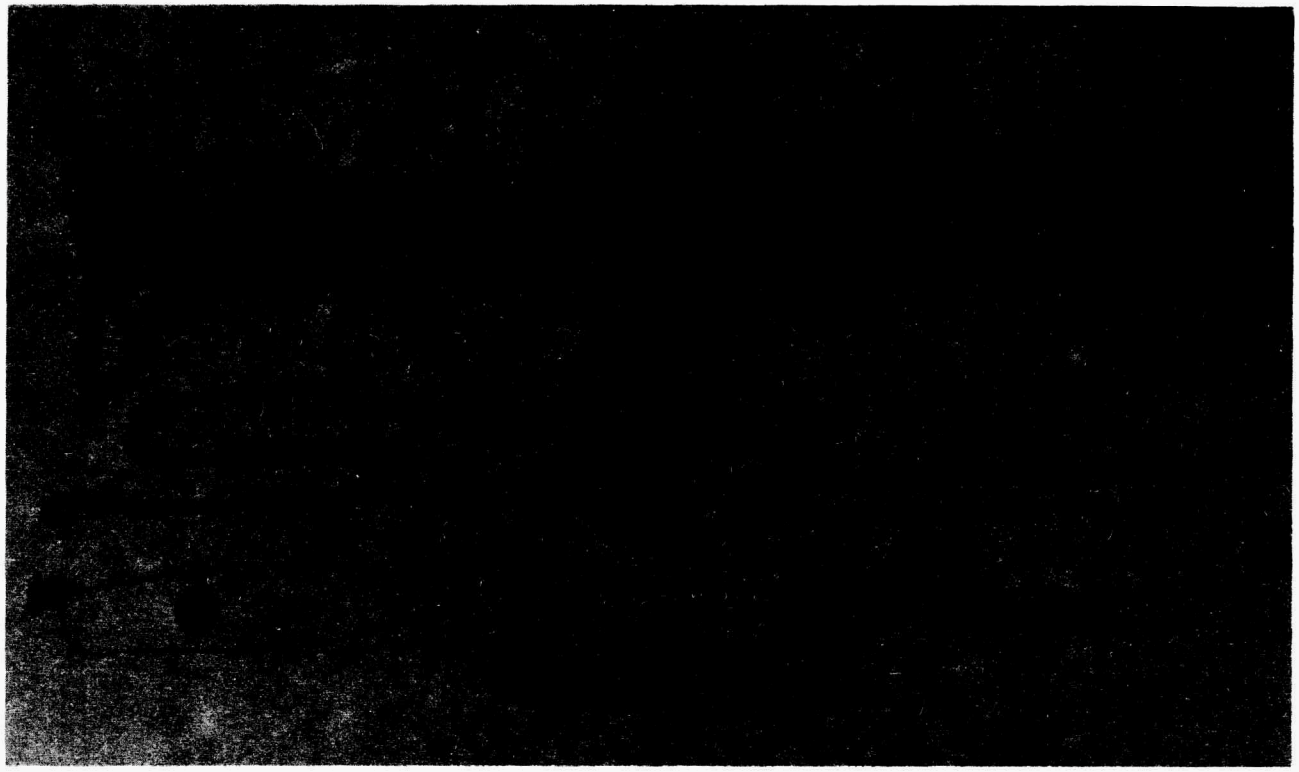

Fig. 3.15. Lift-fixtures adapted for hot-cell use.

ORNL-PHOTO 6718-87

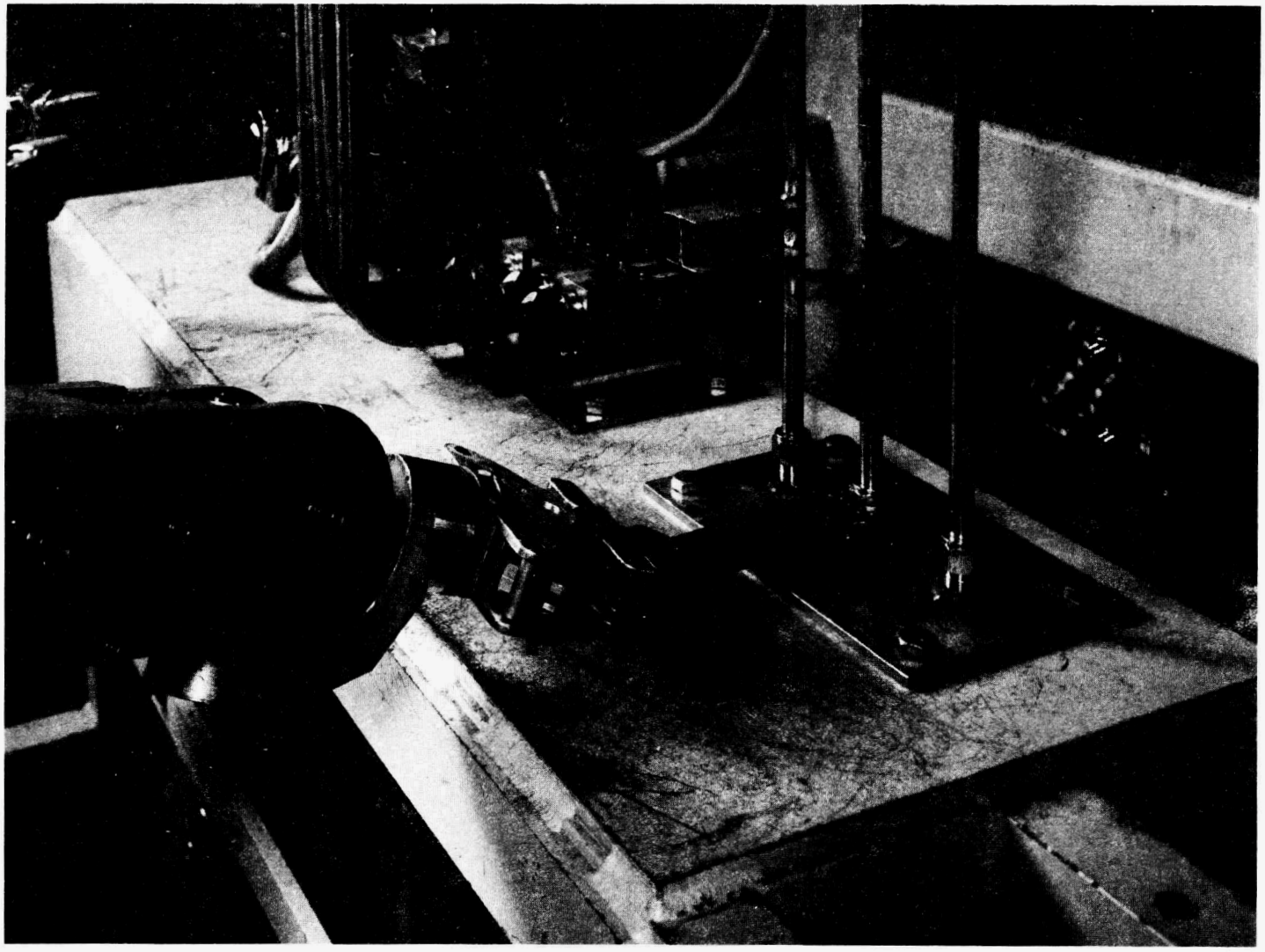

Fig. 3.16. Standard wrenching operation on a commercial tubing connector by electromechanical manipulator.

ORNL-PHOTO 6719-87

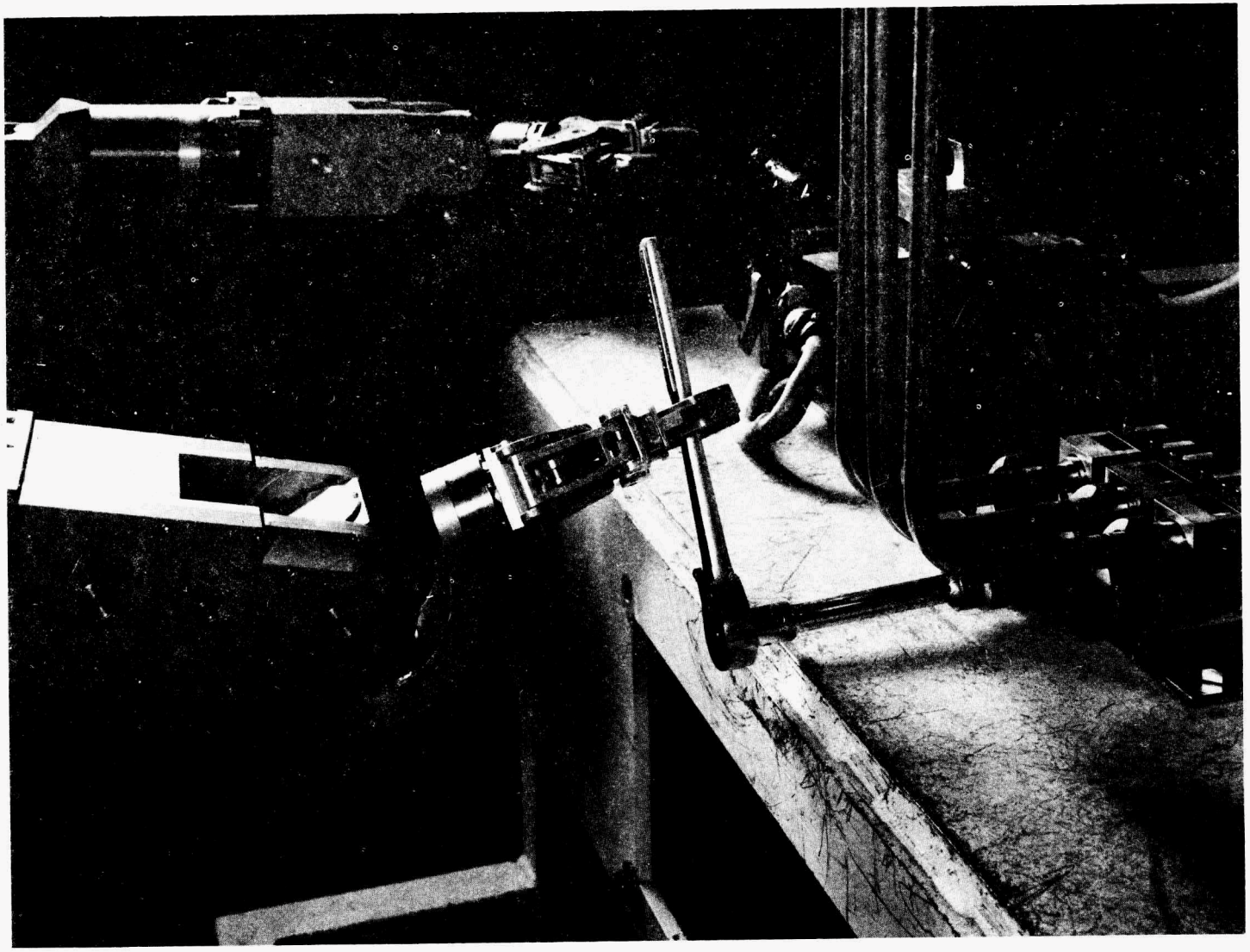

Fig. 3.17. Standard ratchet wrenching operation on a special fluid-connector by an electromechanical manipulator.

respectively. A 25-mm (1 in.) drive impact wrench suspended from a crane hook can develop up to 1000 N·m (750 ft-lb) of torque. Smaller drive wrenches are also adapted for crane hook use. Precision component joints requiring very accurate torque values should be avoided where possible to improve reliability and reduce change-out time. This is absolutely necessary for crane-and-impact-wrench type operations. Figs. 3.18 and 3.19 show two different sizes of electric impact wrenches. The large unit is rigged with crane hook lift-points to ensure that nut- or bolt-chasing occurs in either a vertical or horizontal direction, requiring the crane operator to make only single-control adjustments of the crane hook position to follow a screw thread engagement.

ORNL-DWG 80-15099R

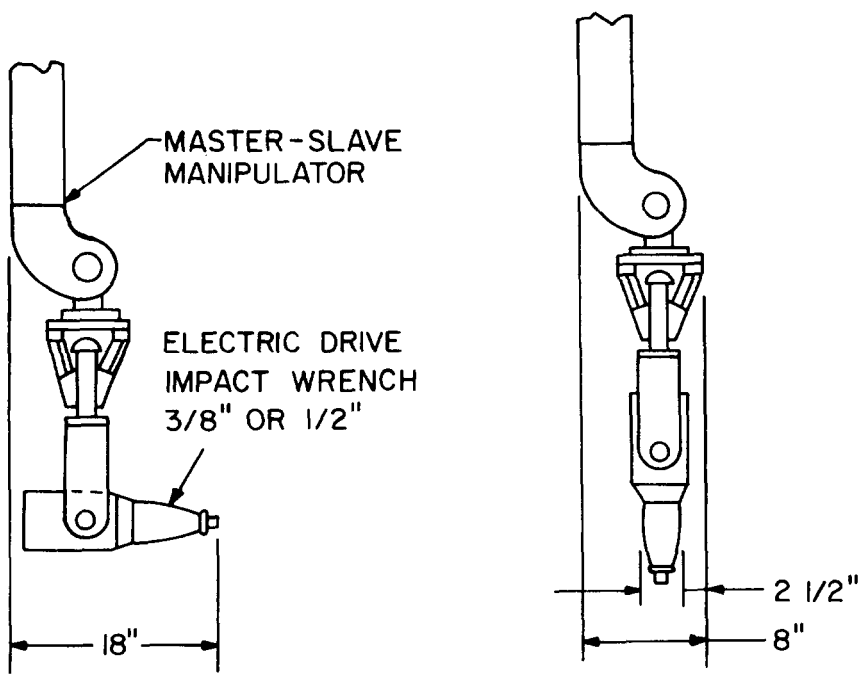

Note Dimensions typical

Fig. 3.18. Impact wrench used with manipulator.

Lift fixtures commonly used with crane hooks include strong-backs with adjustable lift points, primary crane hook extensions, and general purpose lift fixtures equipped with multiple slings. All tools and fixtures are designed with the ability to be passed clearly through the transfer locks in and out of the process areas.

ORNL–DWG 80–15101R2

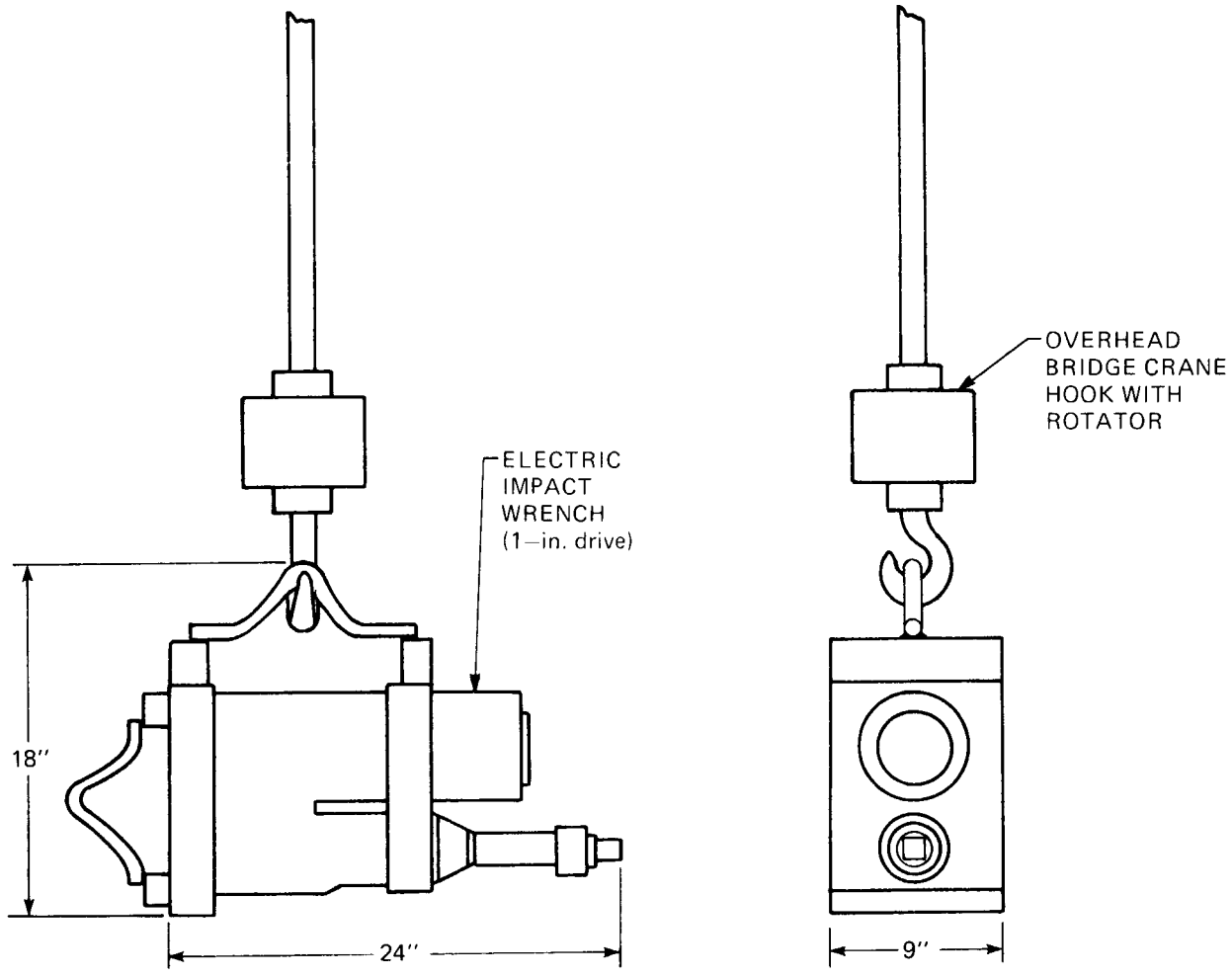

Note: Dimensions typical

Fig. 3.19. Large impact wrench for use with overhead bridge crane.

3.11 CELL PENETRATIONS

A general discussion of hot-cell penetrations to provide services through the shielded containment walls of a facility is covered previously, in Sect. 2.5, and mentions air-locks and pass-through openings which are designed as confinement barriers with double doors or plugs to ensure the airtightness required to maintain pressure differentials of the cell atmosphere. Standard service penetrations are designed to accommodate utilities, master/slave manipulators, and periscopes.

Special penetrations are provided to expedite transfer of tools and spare parts. The designer must be familiar with the size, location, and configuration of these penetrations to ensure that all tools and equipment modules can be easily moved into the cells to service remote maintenance activities.

4. GENERAL GUIDELINES FOR THE DESIGN OF REMOTELY MAINTAINABLE EQUIPMENT

This section discusses remotely maintained equipment to guide an understanding of the capabilities and limitations of remote maintenance systems available to access and service in-cell equipment.

Operations in radiochemical processing facilities utilize equipment designed to function by remote control and to be maintained by remote handling equipment. This is based on considerations to isolate the operating personnel from high radiation and contamination hazards.[1] These design guidelines are based on concepts, ideas, and requirements gained through remote handling equipment operating experience. It is imperative for the designer to be familiar with the characteristics, capabilities, and limitations of the systems that will be used to perform the remote maintenance on the process equipment before undergoing final design. This includes cranes, manipulators, and support equipment such as lighting, viewing systems, and the range of tools available (Sect. 3).

The designer must ensure that the process equipment can be maintained remotely with adequate access (Sect. 4.4) to any given unit and provide sufficient space and clearances to illuminate and view the entire maintenance procedure. An equipment mock-up area as a design aid is both useful and desirable for proof testing of the remote maintenance procedures and handling operations under realistic conditions. Beyond the initial equipment installation and plant facility startup, personnel are excluded from hands-on access; hence, equipment designed to be operated and maintained remotely must also be installed remotely.

4.1 RADIATION

Process systems that handle radioactive materials are required to be remotely maintainable to minimize personnel exposure and to be assembled with components of economically useful durability in the ionizing radiation environment. The characteristics of radioactivity are discussed in more detail in Appendix A.

The designer of a radiochemical process facility is concerned about the protection of personnel from sources of harmful types of ionizing radiation. The types and intensity of radiation in a process cell at any given time depend on the source materials present—spent fuel, the process stream, induced radioactivity, surface contamination—and their locations.

Spent fuel is a source of intense high-level radiation usually comprised of three major components: (1) actinide elements (uranium, neptunium, plutonium, americium), which are the major sources of alpha and neutron radiation; (2) fission product elements, which provide most of the beta and gamma radiation; and (3) structural materials in the fuel assembly, which provide significant beta and gamma radiation from induced activity. Surface contamination consists of spent fuel solutions or particles that may escape from the normal process stream and deposit on external surfaces or become entrained in other process streams. Surface contamination is usually a secondary radiation source in the presence of normal fuel process streams but is still significant when the normal process stream is removed (Sect. 2.4).

The designer of radiochemical process plant equipment is chiefly concerned about gamma radiation effects on its many materials of construction. Generally, most metals are unaffected. However, electronic components and organic materials such as elastomers, oils, and plastics may be severely affected and may have very limited use in areas of high gamma intensity. Protection against radiation damage can be provided with local metal shielding when the use of organics in the design is critical or alternative materials are unavailable. Weight, space, and cooling penalties usually result when shielding is utilized. The amount of shielding required is a function of both the radiation resistance of the design material and its location in the process cell environment. Table 4.1 lists shielding materials and thicknesses required to reduce radiation dose rates to one-tenth of the unshielded value.

Table 4.1. Conservative estimates of shielding required to lower in-cell dose rates to one-tenth of original

	Density		One-tenth dose rate thickness	
Material	g/cm^3	$lb/in.^3$	cm	in.
Concrete	2.4	0.087	23.11	9.1
Iron	7.94	0.287	6.86	2.7
Tungsten	19.64	0.710	1.78	0.7
Lead	11.34	0.410	2.79	1.1
Uranium	18.76	0.678	1.37	0.54

The designer should be familiar with shielding material selections to optimize design decisions. Appendix B includes tables that list the effects of gamma radiation on numerous materials and various electrical components.

4.2 STANDARDIZATION

Standard equipment selection reduces overall design and construction costs of a plant, reduces spare parts inventories, and minimizes operator training time for maintenance. General standardization guidelines for equipment designers include the following:

1. Commercially purchased components, modified if necessary, are preferred to specially designed and fabricated components. In general, manipulators with enhanced capabilities (see Sect. 3) require fewer adaptations to standard equipment.
2. Limit the number of different types of commercially purchased components (further guidelines are contained in Sect. 6).
3. Utilize standard design solutions, as described in this manual, wherever possible in preference to creating new design solutions.

4.3 REPLACEABILITY

The following list entails some recommended design practices to provide for the replaceability of modules (Sects. 2.3 and 4.9):

1. Design modules to be remotely maintained using the available maintenance equipment; avoid special tools, jigs, and fixtures, if at all possible.
2. Provide as-built dimensions of all modules or replaceable components.
3. Mark and label (Sect. 4.10) modules to identify where they mate to the parent machine.

4.4 ACCESSIBILITY

There is a significant difference in the accessibility requirements for equipment to be repaired by force-reflecting servomanipulators rather than by humans. For instance, an impact wrench modified for in-cell manipulator use would typically have overall dimensions of 41 to 46 cm (16 to 18 in.) long by 30 to 41 cm (12 to 16 in.) high by 15 to 20 cm (6 to 8 in.) wide. Use of the wrench to remove or loosen a bolt on an equipment module would not only require sufficient access space near the bolt but also a clear path of sufficient size to bring the tool into the work space from a direction accessible to the maintenance equipment. Other considerations include leaving sufficient clearance to accommodate thread travel as the bolt is loosened and ensuring that the bolt head is visible with the in-cell viewing equipment. Some general guidelines to ensure accessibility include the following:

1. Modules should be designed to ensure adequate viewing via shielded windows, periscope, or CCTV television systems.
2. Modules should be designed to be reached, disconnected, and handled by available remote-handling equipment, taking into consideration location in the cell and the relation of other modules and equipment.
3. Modules weighing more than 454 kg (1000 lb) should be accessible by an overhead bridge crane; modules weighing up to 454 kg (1000 lb) should be accessible to any auxiliary hoist on the manipulator package, since manipulators and their associated hoist systems are limited in load capacity and reach.
4. Modules should be designed to be disconnected and removed with a minimum of disturbance to other equipment.
5. The module equipment should be designed for ease of inspection and maintenance within the surrounding cell space provided.
6. Modules must be designed to be transferred through available cell transfer tunnels and penetrations.

4.5 FAILURE CONSIDERATIONS AND MALFUNCTION DIAGNOSIS

The designer must anticipate unplanned events such as malfunctions and failures. When failures do occur, the resulting effects must be controlled to assure a safe shutdown that will not cascade to cause other failures. Provide the following for all equipment designs:

1. A method to effectively detect failures and identify the specific malfunctions or failures and their respective causes.
2. Prescribe methods to recover from and repair all failures.
3. Prescribe methods to stop flows or bypass process materials and to drain (and flush, if possible) components prior to removal.

4. Specify methods for removal and storage of process or product materials from the failed system.
5. Assure that the design and associated maintenance time periods meet plant operating availability requirements.
6. Recommend in-service preventive maintenance inspections and operations and methods for accomplishing them remotely.
7. Assure that the equipment meets the modular design criteria.
8. Perform malfunction/failure analysis of equipment operations to assure that failure modes do not lead to more failures, etc.

4.6 CALIBRATION AND ADJUSTMENT

The calibration and adjustment of instruments and components by remote manipulation and viewing are difficult tasks. In-cell sensors, used to measure position, speed, force, temperature, and flow present special problems. These components are subject to failure due to radiation and corrosion effects, as well as from normal use. Some general guidelines in this area include the following:

1. Designers should minimize in-cell use of calibration and adjustment mechanisms wherever possible. Consider redundant in-cell sensors to provide opportunity to remove one unit for repair/recalibration or replacement while the second unit covers ongoing operations.
2. Provide means to remotely calibrate in-cell sensors from outside the cell. The techniques depend on the sensor applications. Frequently, redundant sensors are used to measure a given parameter continuously, and portable sensors are used periodically to confirm the fixed sensor output accuracy. Fixed gage points would apply to a position-measuring sensor.
3. If in-cell sensors are unavoidable, then adjustment and calibration operations should be performed in-situ using the servomanipulators wherever possible. Performing these operations by contact means, in most cases, will require removal from the cell and decontamination of the sensor or mechanism.

4.7 DECONTAMINATION

Equipment taken outside the process cells must be decontaminated (Sect. 2.4). Most equipment can be thoroughly decontaminated to reduce the gamma radiation at the surface to levels of acceptance prior to performing contact maintenance or disposal preparation. The following considerations are important:

1. Choose construction materials for equipment, scheduled to be decontaminated for contact maintenance and later reused, which resist degradation by the decontamination fluids and procedures.
2. Equipment, not to be reused, may be constructed of lower grade materials not necessarily resistant to the decontamination reagents.
3. Consider the decontamination procedures so the design of the equipment can reflect the following features:
   - no blind holes unless provided with drain ports,
   - specify continuous welds to fill cracks and crevices,
   - use smooth or polished metal surfaces (electropolishing is a common finishing technique used widely in the nuclear industry),

- avoid porous materials, if possible, and
- eliminate joints that may trap material, where possible.

4. The primary method of in-cell maintenance is replacement of failed modules by remote handling and manipulation techniques. Subsequent repair of failed modules will, in many cases, require contact maintenance. There are three basic techniques to reduce ionizing radiation contamination to acceptable levels and permit contact maintenance on complex items such as television cameras and manipulator arms:
   - Install gastight and watertight shrouds that protect mechanisms and joints but do not impair operation. These can be placed around certain equipment before transferring the unit into the cell. The shrouds can prevent contamination from entering the joints and mechanisms and can be decontaminated effectively.
   - A shroud can be placed around the equipment prior to transfer into the cell and removed before the item is transferred into the contact maintenance shop. This is commonly referred to as "booting."
   - Decontaminate unshrouded equipment to acceptable levels (see Sect. 2.4). In this case, complete equipment rebuilding to replace items such as bearings and connectors, which are susceptable to damage by decontamination solutions, is usually required.

4.8 STORAGE OF EQUIPMENT

General guidelines established for equipment storage include the following:

1. Most uncontaminated spare module subassemblies and components will be stored out-of-cell in controlled storage areas.
2. Where failure of a component must be corrected rapidly, spare parts must be stored in-cell in controlled storage areas. Spare parts should be stored in the immediate vicinity of use to minimize transfer distances. Consideration must be given to radiation damage to equipment inventoried in-cell.
3. Storage of special tools and fixtures used infrequently for the installation, removal, and calibration of in-cell equipment must be considered. These items will become contaminated and can be stored in a number of places, including the following:
   - on or in the vicinity of the equipment they service,
   - in the controlled storage areas within the cells,
   - in the contact-maintenance shop storage area (after decontamination), and
   - out-of-cell in gastight bags or containers (after decontamination).
4. Spare parts, tools and fixtures, and storage needs must be identified as part of the equipment design.

4.9 MODULARIZATION OF EQUIPMENT

Previous sections discuss why certain types of components are mounted in remotely replaceable modules or subassemblies. This section covers some basic guidelines and special tools used to enable the installation and replacement of modular units by remote maintenance handling techniques.

Special tools may be designed for specific maintenance tasks. As an example, a special lift fixture, used on a specific module unit not frequently moved, is a special tool. Special tools may be difficult to store and to relocate later when needed. The designer should minimize the need for

special tools, fixtures, and gages required to maintain remote equipment. Use special tools and fixtures only where there is no viable alternative.

4.9.1 Lifting Bails

All replaceable modules or subassemblies require lifting for transport, installation, and replacement in the process cells. General guidelines for lifting include the following:

1. Install fixed lifting bails on the modules where possible. This avoids special lift fixtures and helps to minimize the maintenance task time.
2. Provide tapped holes at the module lift points for threaded eyebolts when a fixed bail interferes with installation or operation. This choice depends on the dexterity of the servomanipulator type available to install and remove the eyebolts or the hole plugs. Commercial designs of standard eyebolts include both rigid-eye and swing-bolt choices in a wide range of sizes.
3. Whether lifting bails, eyebolts, or slings are used, the design strength analysis should be based on the worst case loading to avoid failure of the lifting means when the lift is applied abnormally. A design safety factor of two or more is recommended for all lifting bails, fixtures, eyebolts, and cable slings based on yield strength and 150% of the test load rating.
4. Provide the required access space around the lifting bail for ease of crane hook engagement.
5. Ensure that the lift point is visible to the in-cell television cameras during crane hook engagement and disengagement operations.
6. Locate the lift point over the center of gravity to enhance removal and installation by enabling the module to hang in its normal installed attitude. This normally requires installation of bails after module fabrication. Single point lifts that require no special rigging are preferred where possible, but if a module is configured so its center of gravity is abnormally offset, then multiple point lifting may be necessary.
7. Design rigid lifting bails to ensure stable engagement between the bail and the crane hook. This controls free pivoting of the module or the crane hook at the point of contact between the bail and the hook. Examples of good bail design for hook and grip control are shown in Figs. 4.1 and 4.2.
8. Design lifting bails for straight vertical hoisting. In general, good practice crane operations apply a vertical force, only, when lifting a load.
9. Design small modules, normally handled by the manipulator, with features to enhance the grasp of the manipulator tongs for a positive hold and maneuverability. Examples of channels to aid tong gripping and control are shown in Fig. 3.14.

4.9.2 Rest Points

All remotely replaceable modules require rest points to:

1. Assure that the unit remains upright guarding the equipment from falling over or tipping in any manner preventing lift access by a crane hook or manipulator. The use of special maintenance stands is discouraged for the same general reasons special tools should be avoided, as discussed in Sect. 4.9.1.
2. Prevent damage to critical elements on the module.
3. Although most modules rest in place by gravity, if hold-down fasteners are used, the rest points must stabilize the unit for self-support when the mounting fasteners are disengaged,

ORNL--DWG 87-5531

CAP	"A" MIN.	"B" MIN.	"C" MAX.
1 TON	3 3/4	1 1/4	3/4
2 TON	4	1 1/2	3/4
5 TON	6 1/2	2 3/4	1 1/4
10 TON	10	4	2
25 TON	13	6	3 1/4
50 TON	18	8 1/8	4 1/2

Note: Dimensions in inches.

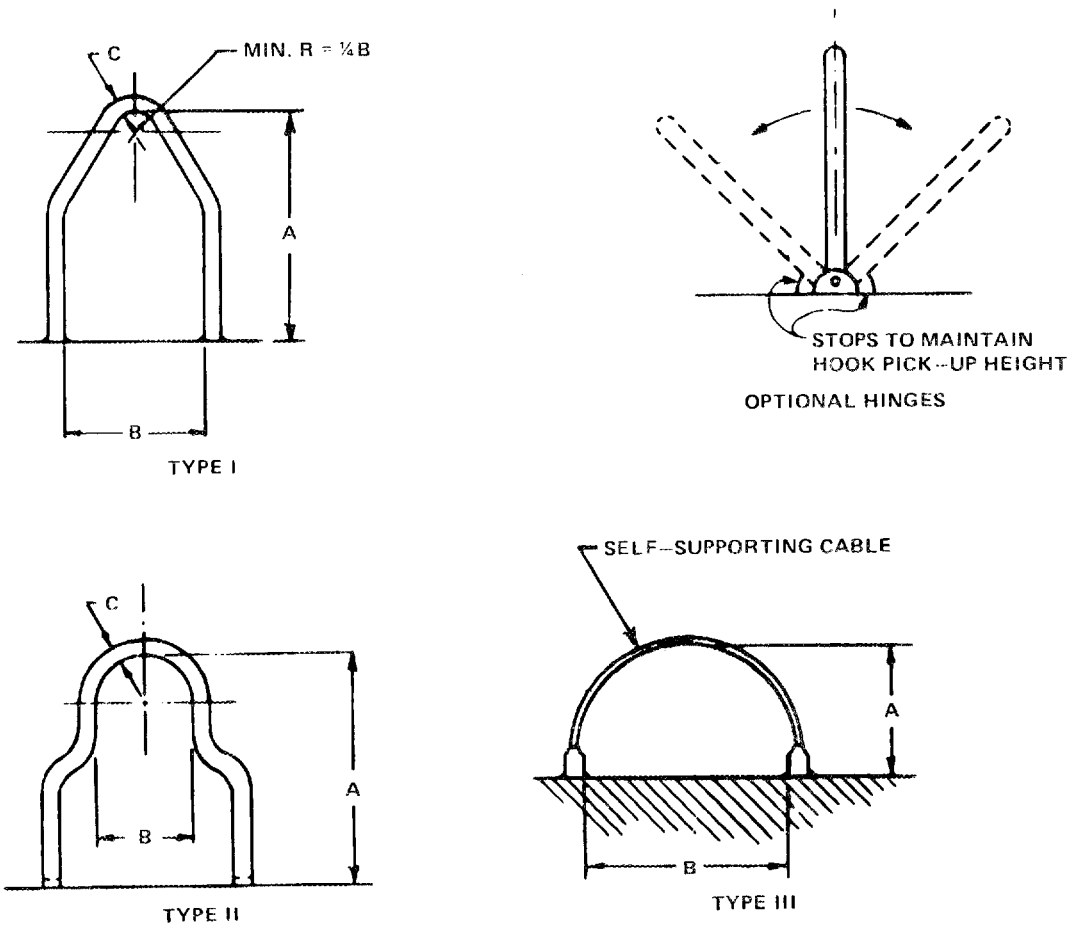

Fig. 4.1. Lifting bails - types I to III.

ORNL–DWG 87–5532

CAP	A	B	C	D	E	F
1 TON	1	2 1/2	1	1	6	4
2 TON	1	2 1/2	1	1	6	4
5 TON	1 1/2	1 1/2	1 1/2	1 1/2	8	6
10 TON	2	5	2	2	10	8
25 TON	3	8	3	3	12	10
50 TON	3 1/2	10	5	4	14	12

Note: Dimensions in inches.

BOTH TYPE IV AND V BAILS ARE TO BE USED WHERE HOOK IS TO BE USED TO ROTATE MODULE

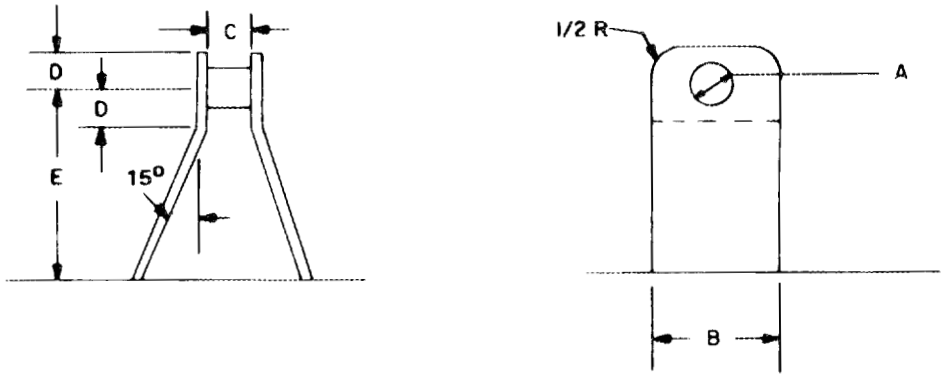

TYPE IV

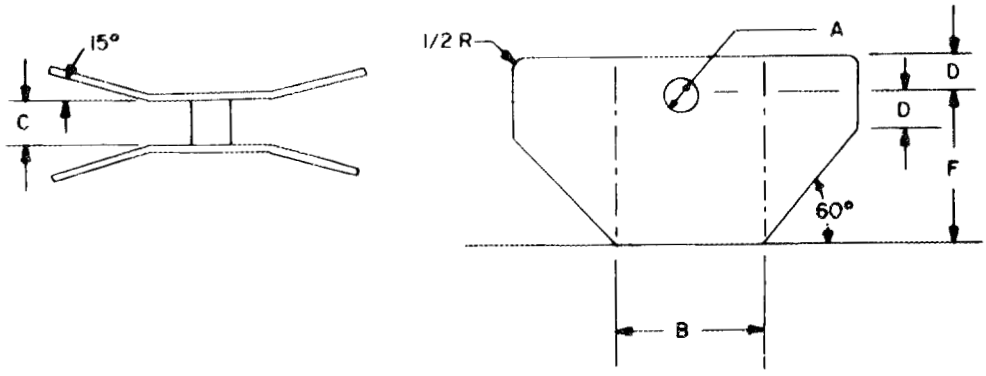

TYPE V

Fig. 4.2. Lifting bails - types IV and V.

since a manipulator may be required to help rig a hoisting hook at the lift point after the fasteners are loosened; especially, when an overhead bridge crane lift is required.

4.9.3 Alignment Features

All remotely replaceable modules and assemblies require built-in alignment guides to simplify installation. General guidelines suggest:

1. It is common practice to use two companion sets of guides to locate a module. The first set does gross positioning and leads the module into the second, more precision guide set, which may be a set of close tolerance pins and holes to ensure a precise gear engagement, or a shaft coupling engagement. A well chosen, two-stage guidance can lead a unit squarely in place using only a hoist, without requiring a manipulator system for alignment assistance.
2. The design of a precision guide and locating procedure avoids undue tilt, binding, or seizing during installation and removal. Precise alignment of a module should occur over the last 3 to 5 mm (1/8 to 3/16 in.) of vertical travel to avoid binding. Close fitting guides made from metals dissimilar to the module case material can effectively reduce the occurrence of galling or binding.
3. Alignment operations rely on in-cell television camera viewing. Provide a clear view by the in-cell television cameras for proper module engagement and mating. Avoid blocking the line-of-sight view of the guides with the module itself.
4. Both gross and precision alignment guides may be comprised simply of one set of alignment pins, but staggered in height, to aid the engagment process.
5. Some examples of alignment schemes for remote placement are shown in Figs. 4.3 through 4.6. Remotely replaceable modules should be installed and located by guides and pins in a manner so that the manipulator or crane hook can be detached before fasteners are engaged. The locating system (see Sect. 2.2.2) is required to be accurate enough to ensure that the screws can then be engaged without damage to the screw threads or other fasteners.

4.9.4 Fasteners

Fasteners commonly used successfully in remotely maintained cells include various bolts, nuts, screws, clamps, and pins. For purposes of standardization (see Sect. 4.2), the following guidelines have been established:

1. Choose commercially available fasteners wherever possible to minimize cost. Some modifications to fasteners, such as the addition of pilot nosed ends, may be useful. The design and fabrication of special fasteners are usually unnecessary.
2. In most cases, screws and bolts used to fasten remotely replaceable modules and subassemblies are expected to be loosened or tightened by motorized impact wrench or nut runner guided by a manipulator or a crane hook. The following guidelines are useful in selecting fasteners:
   - Choose a common mounting bolt size, if possible, to minimize tool changeout during module installation or maintenance.
   - Limit bolt and screw sizes to 6 mm (0.25 in.) diameter or greater and avoid screws with sloted or socket heads due to manipulator dexterity limitations and the high probability of tool damage to smaller screws.
   - Specify coarse series threads to lessen the hazard of cross-thread damage using manipulator tools. Recommend threads to be deburred and cleaned to resist galling.

ORNL-DWG. 79-6977R4

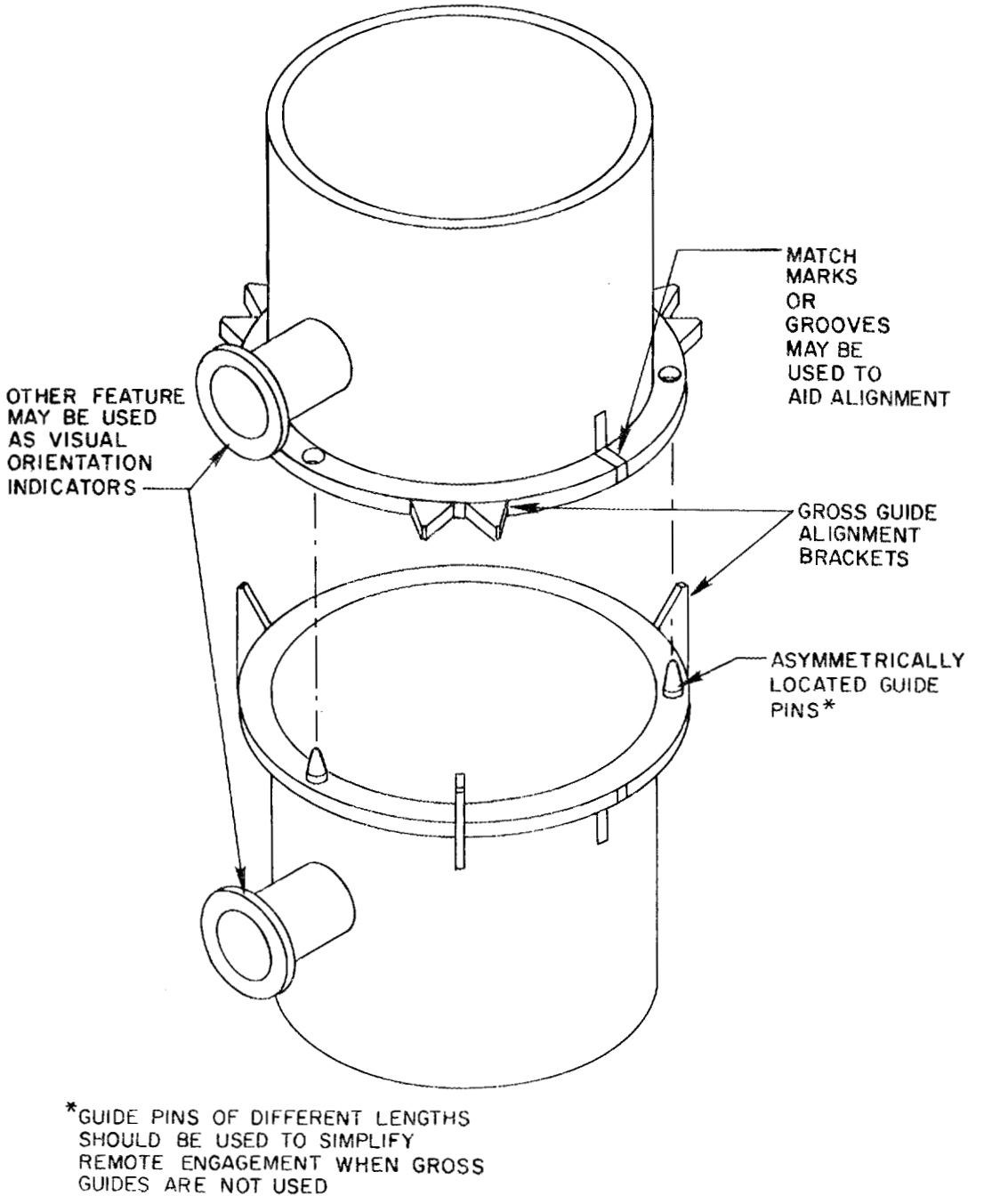

Fig. 4.3. Mating flange guide features.

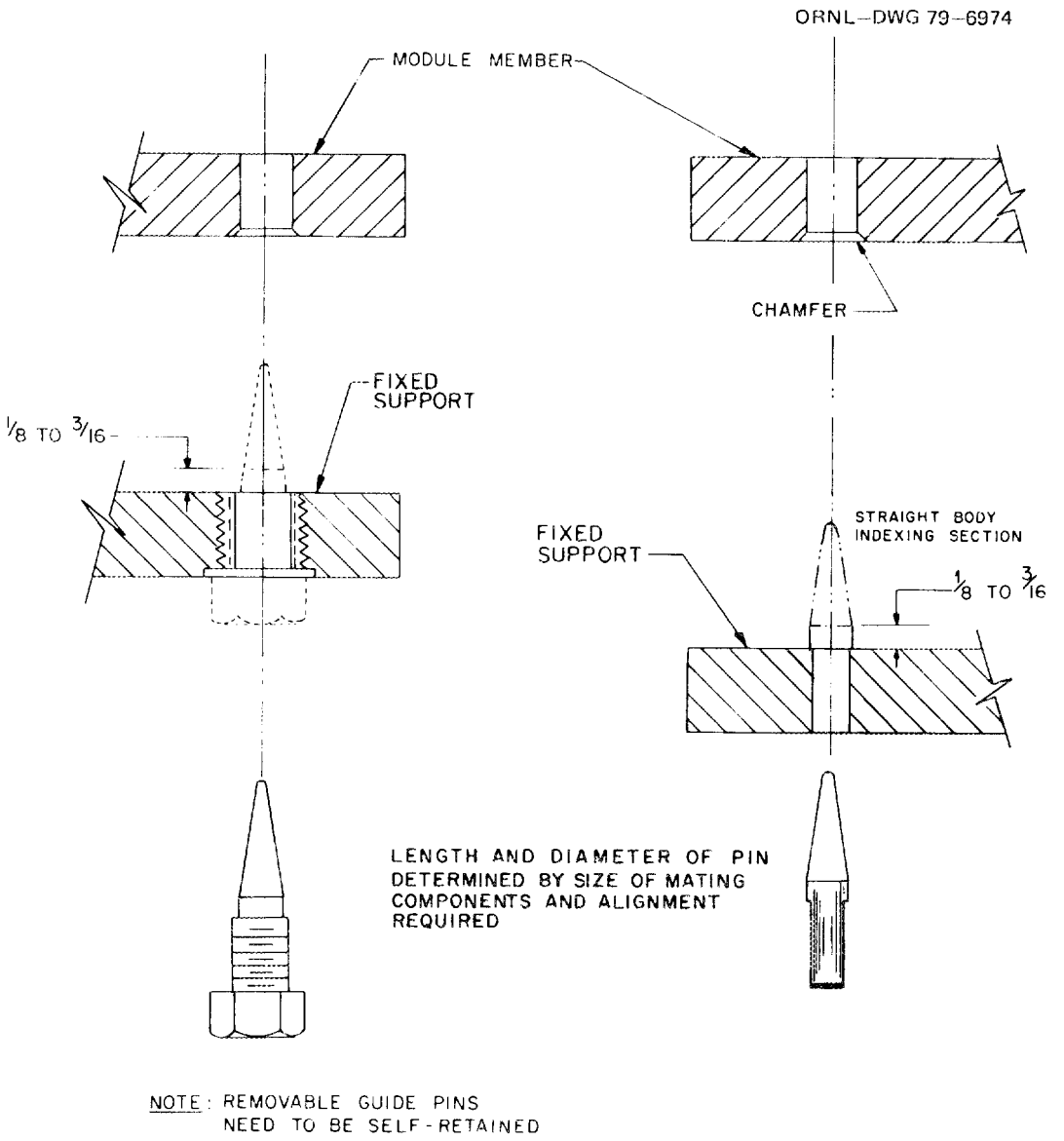

Fig. 4.4. Guide pins.

- Make provisions to avoid cross-threading damage at the start of screw engagement. Specify a slight chamfer or thread blunting on the screw end or furnish a counterbore or countersink to lead a screw into a tapped hole.
- Plan to use ACME threaded fasteners in applications requiring screw threads for frequent fastener removal.
- Fastener metals require a minimum hardness of Rockwell C45 to resist tool damage.
- Mating threads should resist galling without lubrication. Bolts and nuts, or screws and threaded seats, of dissimilar materials or of dissimilar hardnesses, resist galling. However, continuous vibration in service may cause some abrasion and fretting if mating threads are

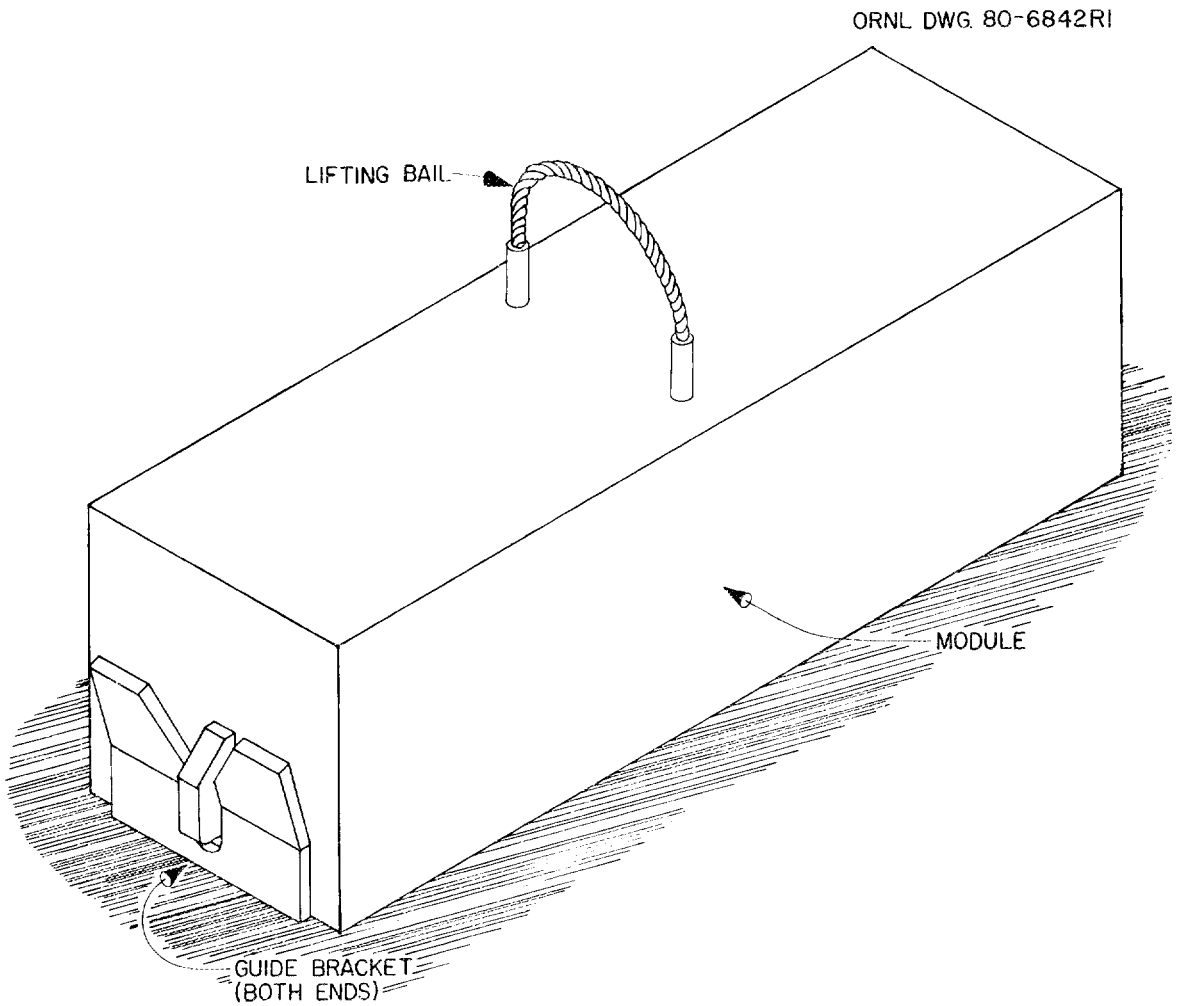

Fig. 4.5. Floor guide bracket.

unlubricated. Where permitted, lubricants can prevent thread surface metal transfer, one primary cause of galling (see Sect. 6.3 for recommended lubricants and surface treatments).

- Design fasteners to be captive in the module structure to avoid loss after unseating or transport. Avoid loose bolt or nut usage. Machine screws may be captive like the fastener design examples in Figs. 4.7 through 4.10. When bolts are used for low precision assembly, the nuts may be captured like the examples in Fig. 4.10.
- Spring load captive bolts, particularly when vertically mounted, to help indicate when disengagement occurs and to avoid interference and bolt damage during module transport and installation. Where a vertical captive bolt is loose, a spring will prevent engagement due to vibration when companion bolts are loosened by an impact wrench. A spring-loaded captive bolt design example is shown in Fig. 4.9.

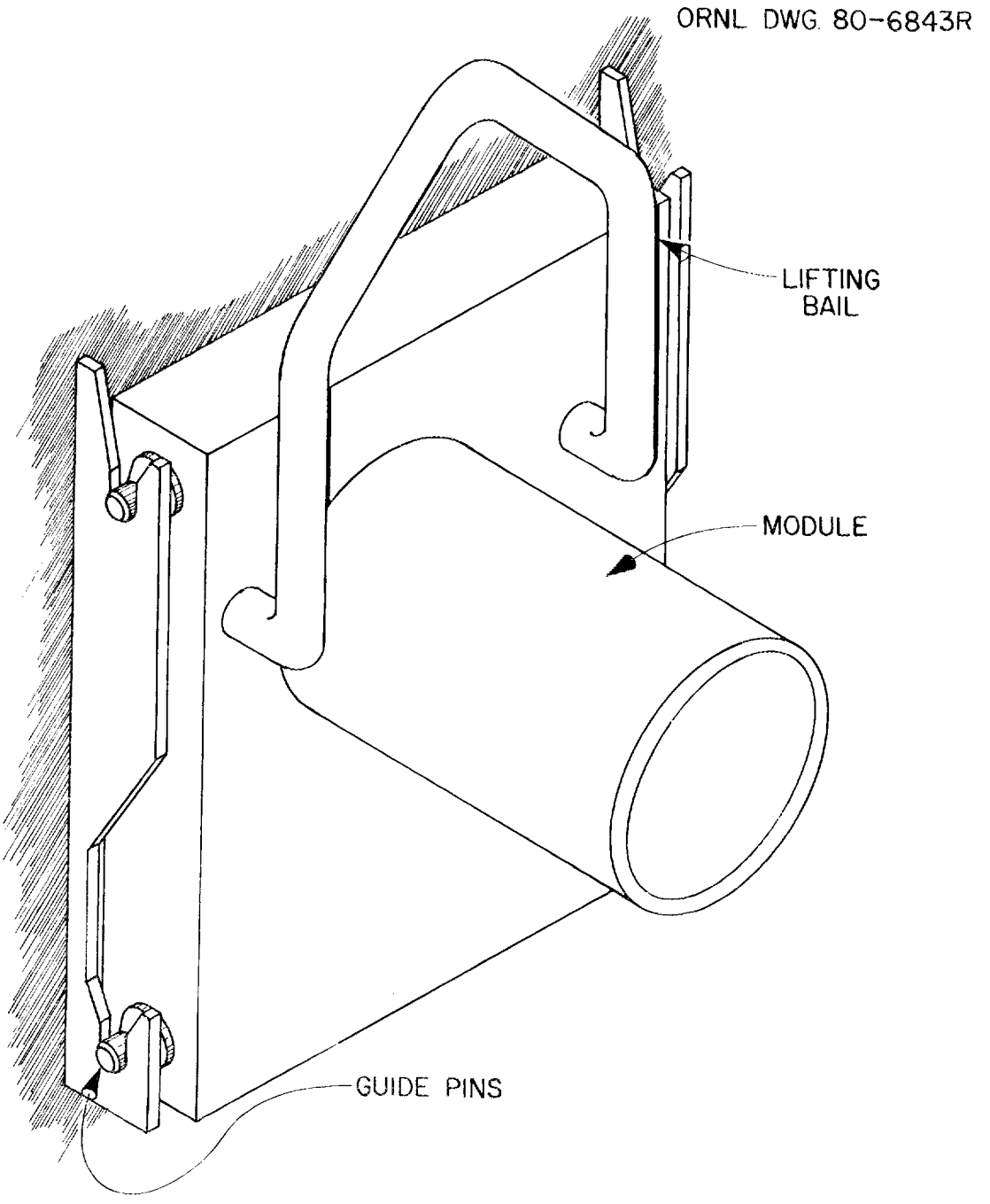

Fig. 4.6. Vertical hanger bracket.

- Provide pins or shoulders to ensure alignment and to apply only tensile force in a manner to load any bolt only along its axial centerline. Never load a fastener heavily to "pull" an assembly into alignment.

ORNL-DWG.80-6850R3

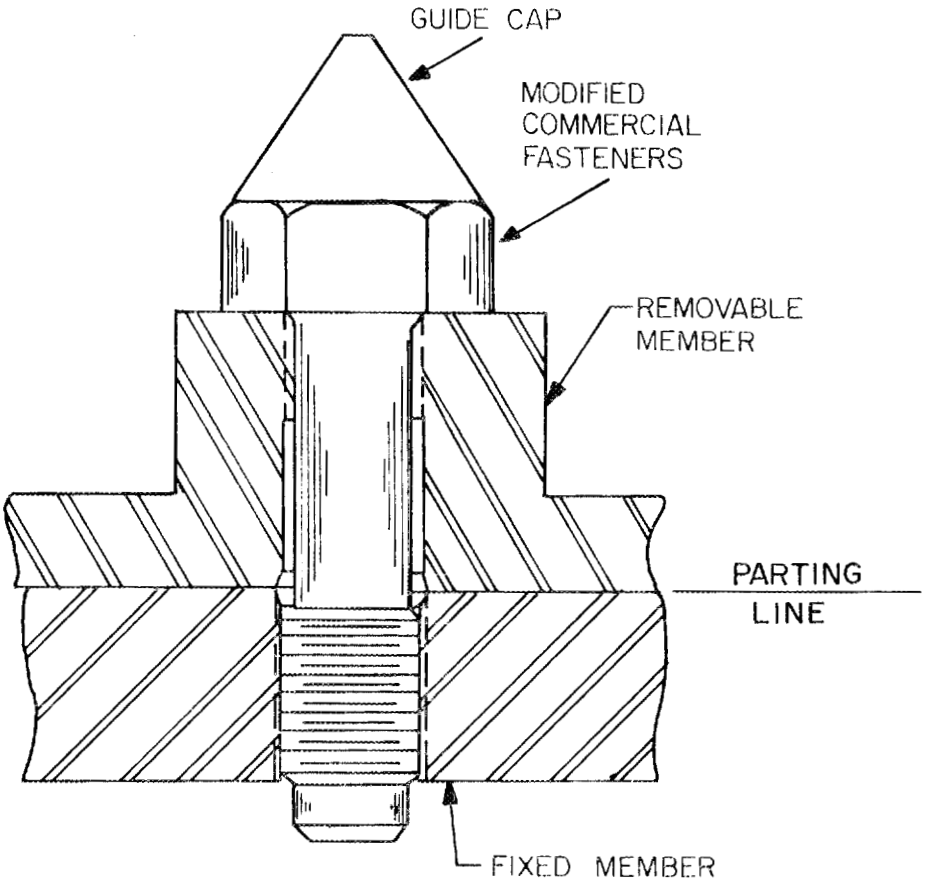

Fig. 4.7. Captive fastener - typical.

- Plan to install any screw fastener, requiring a hook-mounted impact wrench, in either a vertical or horizontal direction. Inclined operation of the wrench requires screw chasing in two dimensions with the hoist to maintain tool position.
- Use the magnetic properties of the mating parts to help retain and/or position fasteners, when possible.
- Consider commercial ball-lock pin fasteners. However, the pins should be modified to provide a gripping head for push-pull operation by the manipulator tongs as shown in Fig. 4.11. To retain loose pins, either attach the pins to the module using a tag chain or provide a captive housing, as shown in the example.
- Commercially available toggle and swing clamps are acceptable to fasten a module expected to be moved frequently. Plan to provide access to the clamping adjustment mechanism by the manipulator tools.
- Consider very limited use of other fasteners such as snap rings, roll pins, cotter pins, and spring clips to secure remotely replaceable units. Limit the use of these fastener types to hands-on maintenance equipment planned for service outside the cell.

ORNL-DWG 80-6851R2

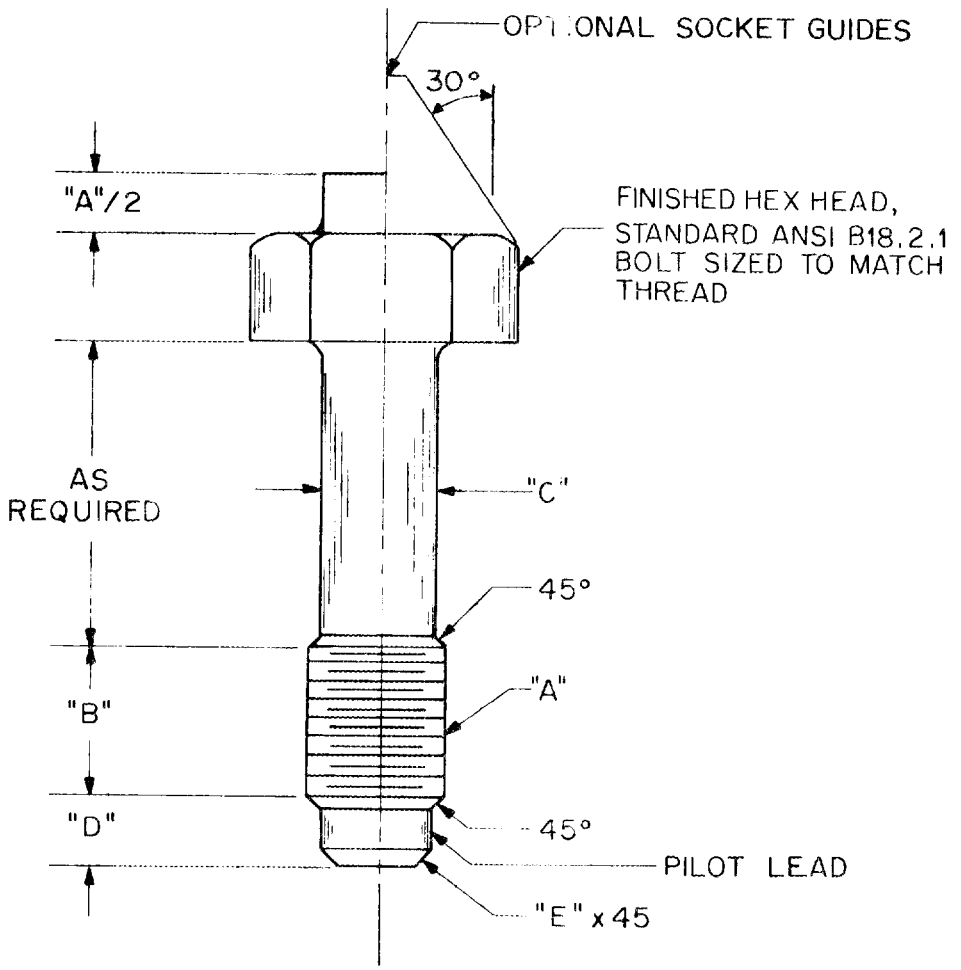

BOLT SIZE ("A")	"B"	"C"	"D"	"E"
3/8 UNC 16-2A	0.38	0.30	0.28	0.06
1/2 UNC 13-2A*	0.50	0.40	0.38	0.06
3/4 UNC 10-2A	0.70	0.63	0.50	0.06
1 UNC 8-2A	0.90	0.85	0.50	0.12
1 1/4 UNC 7-2A	1.10	1.07	0.63	0.12

*A MINIMUM OF CLASS 2A THREADS ARE REQUIRED WITH 3A OPTIONAL.

Fig. 4.8. Captive bolt sizes.

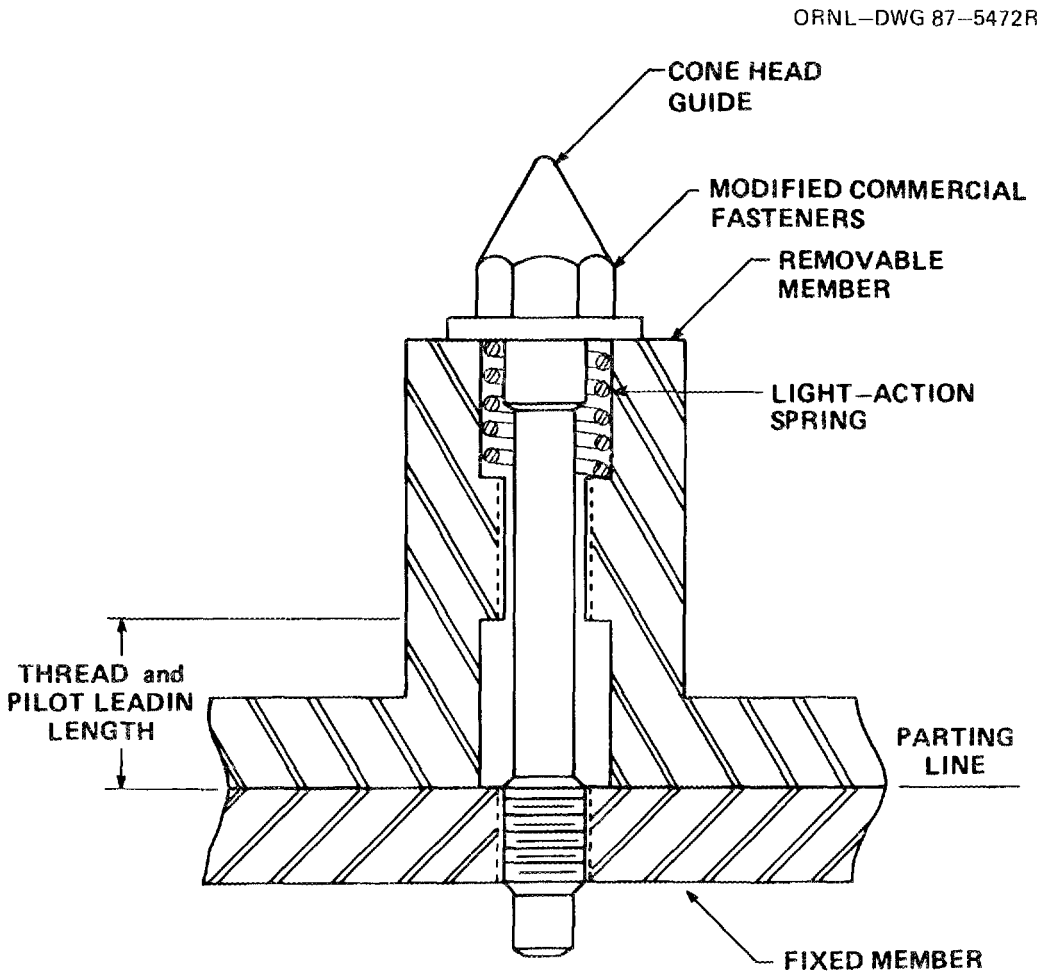

Note: Recommended fasteners, 3/8", 1/2", 3/4", 1", or 1 1/4"
American National Standard Thread

Fig. 4.9. Spring-loaded captive bolt for remote assembly.

4.10 EQUIPMENT LABELING

All in-cell modules and components should be clearly marked for identification. Accountability of components and modules will be required for numerous purposes: including spare parts inventories, in-cell equipment identification, equipment refurbishment, and equipment packaging and disposal.

The modules are to be permanently labeled (i.e., stamped in stainless steel plates for protection from the cell environment). The labels or markings are to be placed in locations that are clearly visible to remote viewing cameras. More than one label may be required on a large module.

4.11 COATINGS AND FINISHES

Decontamination procedures require material surfaces (Sect. 5.2.2) that are free of pits and grooves. Cast parts may require a suitable coating, for the service environment, to cover the pits

ORNL-DWG 80-6852R2

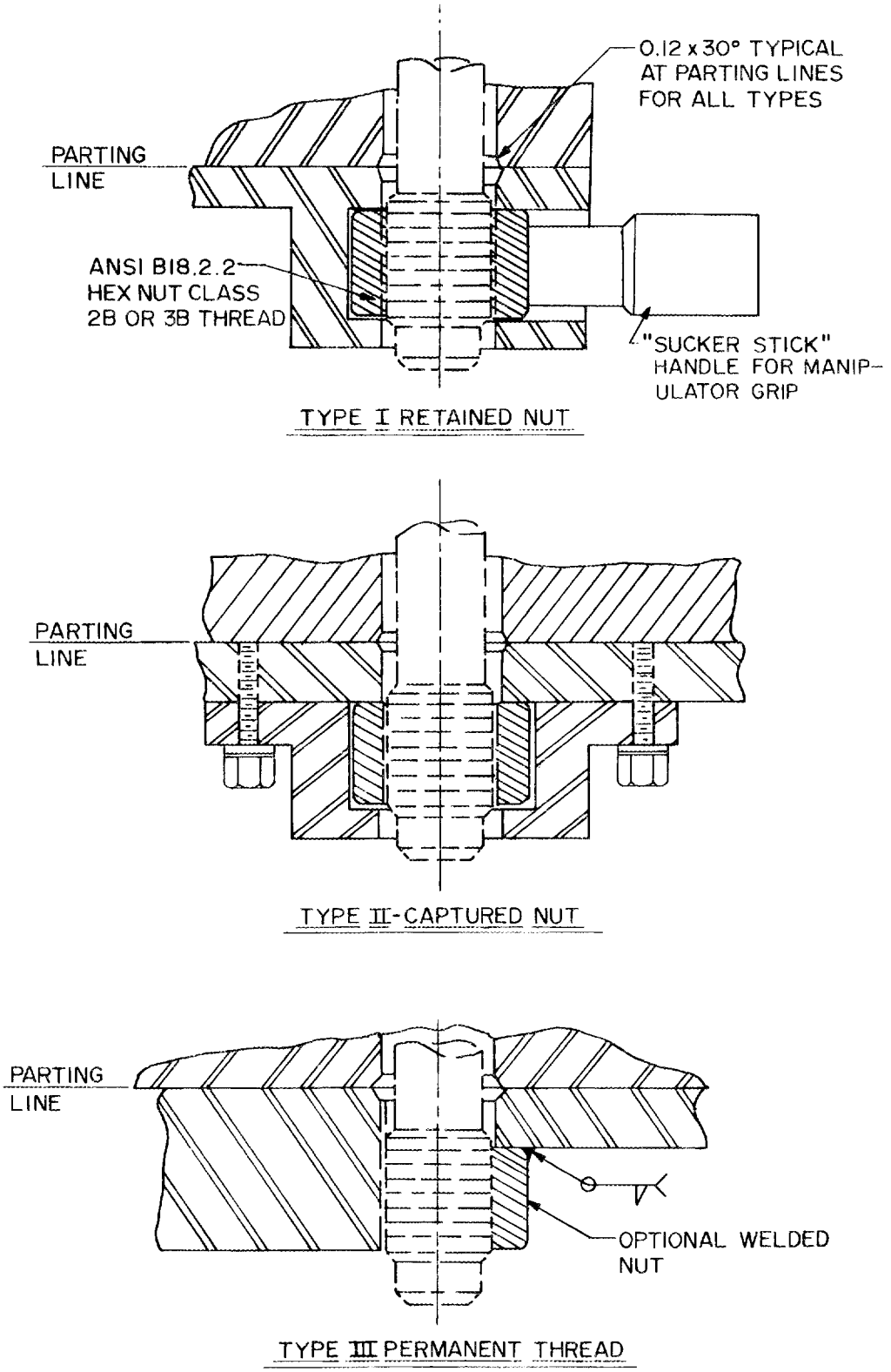

Fig. 4.10. Captive nuts.

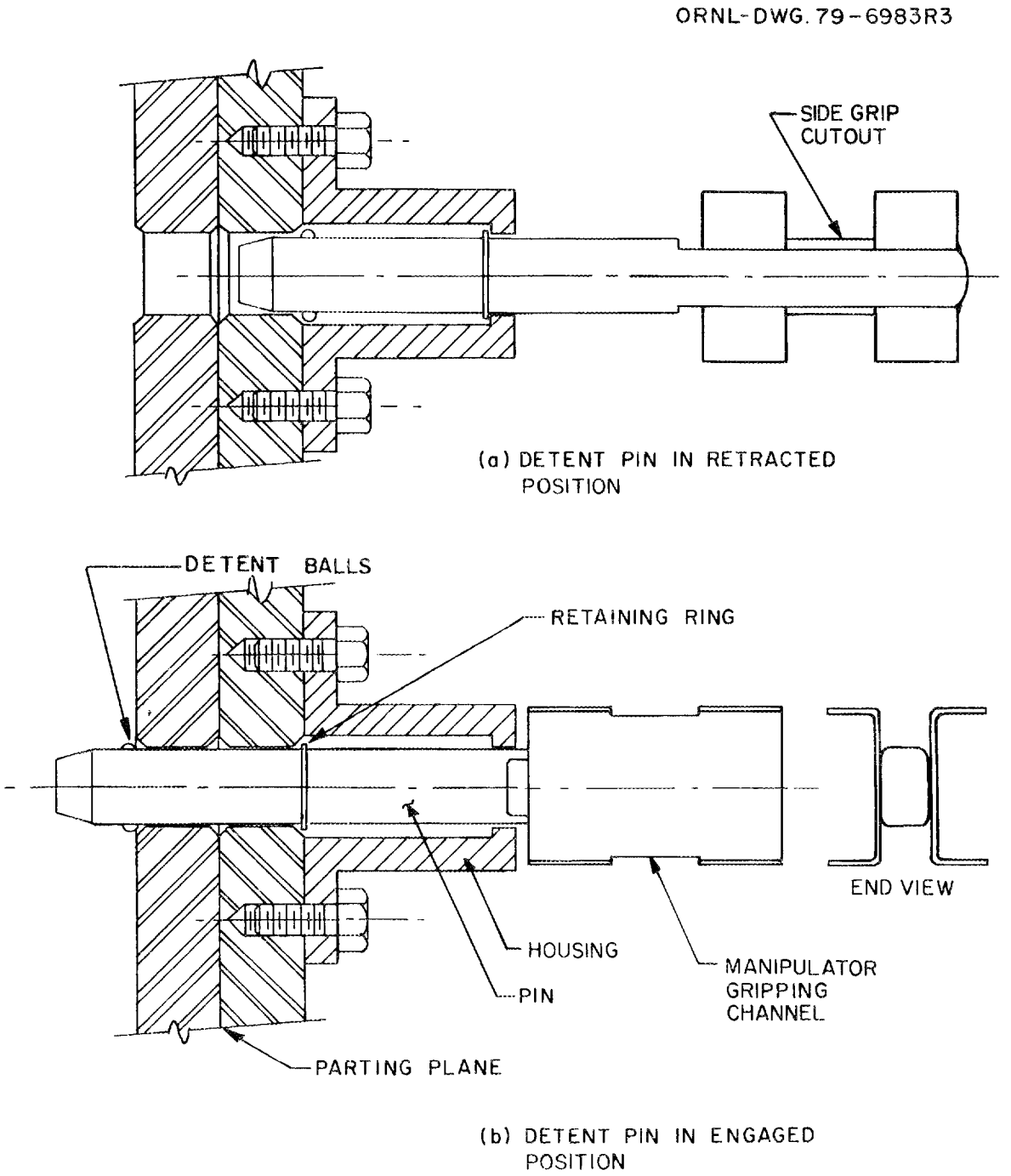

Fig. 4.11. Detent pin.

that frequently result from the casting process. All stainless steel parts should be electropolished, if possible, since this process has been shown to greatly enhance the decontamination properties of stainless steel. Coarse grinding is an unacceptable finishing process since it tends to smear metal and create pockets that retain contaminants.

The process cell will have acids and moisture present in most areas that will attack unprotected and vulnerable materials. All such materials must be coated with a radiation- and chemical-resistant paint. Many commercial products will have to be stripped and repainted with an acceptable paint.*

Surface finishes should be used to enhance viewing wherever possible. Different colors may be used to distinguish between modules or components. Windmill or strip patterns can be used on moving parts to improve the operator's ability to monitor equipment. To reduce operator fatigue, surface glare must be held to a maximum reflectance of 0.35 ± 25%. This requirement must be balanced with electropolishing surface treatment of stainless steel components for decontamination.

---

*Paints should conform with U.S. Nuclear Regulatory Commission Regulatory Guide 3.30, "Selection, Application, and Inspection of Protective Coatings (Paints) for Fuel Reprocessing Plants."

5. MATERIALS GUIDELINES FOR DESIGN

This section contains general guidelines for the selection of materials for the in-cell environment of radiochemical process facilities to meet requirements for resistance to ionizing radioactivity and the corrosive atmosphere that can develop due to spills or leakage from the process equipment. The wetted parts of the process equipment are primarily stainless steel or other materials designed to resist corrosion by the process fluids.

5.1 DESIGN CODES

Standard codes such as those published by the American Society for Testing and Materials (ASTM) and the American Society of Mechanical Engineers Pressure Vessel and Boiler Code (ASME Code) are used extensively for the design of all the equipment. These and other applicable codes should be referenced in the specification or criteria for each item of equipment.

5.2 MATERIAL SELECTION

5.2.1 Radiation-Resistant Materials

When a material is exposed to ionizing radiation, absorption of the high-energy particles can produce microscopic changes in the composition and structure of the material. The minute changes caused by a single reaction has almost no observable effect on the physical, chemical, or biological properties of the material. However, if the material continues to be exposed to radiation, a sufficient number of reactions can occur and cause the properties of the material to change.

The nature, extent, and influence of radiation effects on the operational capabilities of a component depend on many factors, such as (1) the type of material being exposed, (2) the amount of radiation it absorbs, (3) the environmental conditions other than radiation, and (4) the physical application of the material.

Radiation effects may alter the performance of components in a variety of ways. In many cases, irradiated materials deteriorate much as they would in the absence of radiation, except at an accelerated rate. Materials other than metals and ceramics tend to deteriorate far more rapidly. Some components and materials are especially sensitive to radiation effects and may require special design features and/or special maintenance programs. Examples are components fabricated from organic materials, such as plastics and elastomers; light-transmitting components, such as lenses and viewing windows; electrical and electronic equipment; and mechanical, hydraulic, and pneumatic systems components, such as lubricants, seals, hoses, and hydraulic fluids.

For example, elastomer seals and hoses in hydraulic equipment normally have a reasonably long lifetime, but when they are exposed to a radiation environment, deterioration is accelerated and the useful lifetime may be reduced. Physical changes caused by radiation can include swelling and changes in strength and elasticity and lead to faulty operation of hydraulic systems. A change in the viscosity index of some organic liquids can impair lubricity. Radiation can

produce transient as well as permanent changes in electronic circuits and equipment. Evolution of gases produced from irradiated organic insulation and potting materials can increase pressure in, and rupture the cases of, hermetically sealed electrical and electronic components.

Generally, metallic or ceramic component materials resist radiation effects well and can be selected for the service life of the entire system without periodic maintenance. However, selection of metal components or structures requires some caution. Certain alloys are subject to embrittlement. General purpose load-bearing equipment systems such as cranes may need to be down-rated over the life of the plant because of accelerated embrittlement of parts. Optical lenses have a finite life under exposure to high-radiation fields.

Where possible, the designer should select components of known resistance to high-radiation exposure. The choice of qualified radiation-resistant materials and components ensures greater plant operating life, reliability, and availability by reducing the frequency of maintenance.

Radiation resistance is conventionally stated as the total dose of ionizing radiation exposure that the component can absorb and still remain functional. For gamma radiation, which is of the greatest concern in a reprocessing facility, this dose is normally measured in rads; for example, a particular component may be able to absorb 10^8 rads. The expected life of the component before failure caused by radiation damage may be calculated by dividing the allowable dose by the dose rate. For example, if a component that can absorb 10^8 rads is exposed to a hot-cell dose rate of 10^5 rads/h, the expected life would be $10^8/10^5 = 1000$ h. The effects of radiation on various materials and components are presented in Appendix B.

5.2.2 Corrosion-Resistant Materials

Like conventional chemical processes, radiochemical process equipment is fabricated from materials that resist process fluid corrosion. In a nuclear fuel reprocessing plant, the prime materials of choice are austenitic stainless steels, particularly the lower carbon content "L" grades since these are less susceptible to carbide precipitation and sensitization, particularly when welded. It may not always be possible to use the 300 series stainless steels, primarily when mechanical properties to avoid galling and wear resistance, etc., are required.

Other materials may be susceptible to corrosive damage by material in the process cell environment. The normal environment in the process cell can be modified by leaks or spills. Further, materials used for equipment items that are to be periodically decontaminated, contact-maintained, and then returned to service must be resistant to damage by the decontamination methods and procedures.

The plant designer must anticipate unplanned events as well, such as leaks and spills, which occur in the form of liquids or fumes. The most severe corrosive environment normally encountered by hot-cell components and remote-handling equipment consists of nitric acid fumes and vapors and/or liquid nitric acid from spills and decontamination procedures. The choice of compatible materials and coatings to resist and survive these occasional exposures is based on these corrosion/decontamination factors, as well as the selection of components, such as bearings, couplings, seals, shafts, etc., from suitable materials to assure functional performance.

Certain methods to overcome material incompatibilities may be used. Also discussed in Sect. 4.11, corrosion- and radiation-resistant barrier coatings and sealants can be applied to less qualified materials to enhance performance. In some cases, an economic trade-off may allow the choice to accept corrosion and plan for replacement of the component on a regular schedule, in place of a severe and costly decontamination procedure. The trade-off options depend on factors of operability, service life, ease of replacement, downtime, and overall cost (initial cost, operating delay costs, and disposal costs).

Past operating experience with in-cell equipment has qualified many of the materials, and some of their properties, described below. History indicates that use of the best available materials, such as stainless steel for structures, provides long service life and minimizes corrosion products and other waste materials that must be removed and eventually disposed.

In general, stainless steel is the material of choice for metal components for in-cell processes. The corrosion rates of all stainless steels increase with nitric acid concentration and temperature. Types 304L and 347, in the as-welded condition, show good resistance to nitric acid corrosion and may be used for field-welded fabrication. Types 316 and 316L in the annealed condition have about the same resistance to nitric acid as 304L and 347; however, unless required for other than corrosion resistance, the higher cost may preclude their use.

The resistance of high chromium steels to nitric acid is directly related to the chromium content of the steel; the corrosion rate decreases as the chromium content is increased. With the exception of type 430, the 400-series are not widely used in nitric acid service. Type 446 is comparable to type 304 in corrosion resistance but is more difficult to fabricate. The use of 400-series steels or cast chromium steels is not recommended.

High-silicon cast irons containing up to 3.5% molybdenum are highly resistant to nitric acid corrosion. These irons, however, have poor mechanical properties and particularly low thermal and mechanical shock resistance. They are also difficult to cast and are extremely difficult to machine. High-chromium cast irons, containing 20 to 30% chrome, are exceptionally resistant to nitric acid. This material has better mechanical properties than silicon iron and may be heat-treated readily.

Aluminum alloys are resistant to nitric acid and may have applications in the fabrication of hot-cell components.

Nonmetallic materials, resistant to attack by nitric acid, include glass, polyesters, polyethylene, polyvinyl chloride, butyl rubber, saran, and styrene copolymers.

5.2.3 Materials Resistant to Galling

Stainless steel is used extensively to fabricate hot-cell equipment. Because of the broad use of stainless steel, which is highly prone to galling between mating parts, attention to design against galling is important since galling is not readily detected when it begins to occur with remote manipulation. The galling problem is most prevalent between mating parts of heavily stressed screw fasteners. It is generally avoided by specifying the use of dissimilar mating materials. The following is a list of several causes for galling, along with suggested ways to avoid them:

1. **Poor surface finish** – Screw threads should be deburred and cleaned.
2. **Inadequate lubrication** – There may be a certain amount of abrasion and fretting if bolt threads are not lubricated. Although not always feasible, lubrication will prevent material transfer and thus galling (see Sect. 6.3 for recommended lubricants and certain surface treatments).
3. **Improper selection of materials** – Some material combinations have a high propensity to gall. Nitronic 60 is a trade name antigalling material used primarily for bolt and pin fasteners in high corrosion applications. Table 5.1 presents information generated by ARMCO Steel Corporation, indicating that Nitronic 60 is recommended for components prone to galling and requiring high corrosion resistance. Tests have shown that a precipitation-hardened (17-4 PH) bolt with a Nitronic nut is much better than a Nitronic bolt with a hardened nut.

Table 5.1. Material galling data

Stainless steel couple (hardness – BHN)	Galling pressure (psi)	Wear factor[a]
Nitronic 60 (213) vs Type 17-14 PH (313)	50,000+	4.3
Nitronic 60 (205) vs Type 316 (150)	50,000+	
Nitronic 60[b] vs Type 316 (150)	38,000	
Nitronic 60 (205) vs Nitronic 50 (205)	50,000+	3.5
Nitronic 60 (205) vs Type 440C (560)	50,000+	
Nitronic 60 (205) vs Nitronic 60 (216)	50,000+	2.8
Nitronic 60 (205) vs Type 304 (140)	50,000+	
Type 304 (140) vs Type 316 (150)	2,000	10.5
Type 17-4 PH (311) vs Type 304 (140)	2,000	
Type 17-4 PH (415) vs Type 316 (150)	2,000	18.5
Type 440C (560) vs Type 440C (604)	11,000	3.8
Type 301 (169) vs Type 440C (560)	3,000	
Type 410 (352) vs Type 316 (150)	2,000	
Type 17-4 PH vs Type 17-4 PH	2,000	52.8

[a]The wear factors are weight loss in milligrams after 1000 cycles on a Taber metal abrader machine.
[b]Data obtained from ARMCO Product Data Bulletin S-56A.

The following design hints can help to avoid galling:

1. **Cross-threading** – To avoid cross-threading, prepare bolt threads as shown in Fig. 4.8. Blunting the starter threads is a common practice.
2. **Improper alignment** – Misalignment when beginning to engage threads or when tightening fasteners will increase the potential for galling. Design examples and procedures to ensure positive alignment prior to tightening bolts securely are covered in Sect. 4. Every effort should be made to ensure that bolts are loaded in tension only and not in shear. Pins or shoulders ensure proper alignment and are designed to carry shear loads. A screw fastener used to "pull" an assembly into alignment shows poor design practice.

6. MECHANICAL AND ELECTROMECHANICAL SYSTEM DESIGN

The guidelines in this chapter supplement good machine design practice and apply it to remote maintenance manipulating techniques and limitations in hostile radiochemical process environments. The guidance does not replace or supercede practices, analyses, and evaluations necessary for sound, functional, and reliable designs.

In general, conventional parameters used to develop design- and working-stress specifications, acceptable deflection limits, fits, and finishes are adequate for most remotely maintained equipment except when controlled by exposure factors of high corrosion or radiation embrittlement. Good design practice avoids requirements to perform adjustments using manipulators inside the hostile in-cell areas because of the extreme difficulty. Also, the use of special or single purpose tools or fixtures to perform remote maintenance generally complicates procedures.

6.1 EVALUATIONS AND ASSESSMENTS

6.1.1 Remote Maintenance Evaluation

A technique that has been found to ensure that in-cell electromechanical equipment is remotely maintainable is to prepare a formal remote maintenance analysis during design. This evaluation is performed by developing remote maintenance procedures to a prescribed level of detail. The first step is to identify in-situ removable modules. Next, rank operations required to remove and replace each module in order of execution. It is only necessary to identify specific tools required to perform each operation if, for rare cases, a certain special tool is needed to perform that operation. For each operation, the following questions expect affirmative answers:

1. Can the applicable maintenance system gain access to reach the area and perform the operation?
2. Does the operator have adequate visibility through the camera to perform the task?
3. Are the lift points properly positioned for the module to either hang level or in another orientation necessary for installation or removal?
4. Can the module be set down and remain stable without damage to components?
5. Does the module have provisions for guiding into place and can the operator see the guides?
6. Is there adequate clearance to allow installation and removal?

If maintenance operations are expected in-cell, at a hands-on workstation, or outside in a glovebox, use permanent labels to identify the components to be removed and replaced. List the procedural steps required for removal, disassembly, and replacement.

Occasional adjustments, such as shimming, etc., are made outside on replacement modules before they are transported into the cell for installation. For success, it is generally good practice to record the actual "as-built" dimensions of interfacing parts that remain permanently in-cell. It is recommended that such dimensions are measured and recorded during fabrication. The remote maintenance evaluation should identify the required dimensions. These should also be specified on the engineering drawings and the inspection plan.

6.1.2 Radiation Dose Assessment

A radiation dose assessment is to be conducted for in-cell mechanical systems except those that are all metal, unlubricated, and under low stress conditions. This assessment includes calculating or estimating the radiation dose or exposure to which the equipment will be subjected. Include both general cell background radiation and any contribution from local sources such as fuel assemblies, high-level waste storage tanks, and process solutions. From both the assessed radiation exposure and data from sources such as Appendix C, the expected life of components subject to radiation degradation can be estimated. If the expected life is unacceptable, add shielding or limit exposure time in the radiation field by moving the component to a location where the field strength is reduced to an acceptable level when not in use or adopt design factors adjusted to compensate for reduced capability.

6.2 MECHANICAL DRIVES

Mechanical drives should be designed with the motor or prime mover as the weakest link. The motor should not have sufficient torque to overload other components, even in a stalled condition. Fuses or circuit breakers are located out-of-cell for motor protection, but these devices will not protect the motor-driven components based on time delays to actuate. In the event that it is impractical to comply with these guidelines, the drive should be protected by a torque-limiting clutch or remotely replaceable shear pins.

It is frequently useful to provide a method of remotely driving the unit with manipulator tools. This may be accomplished by specifying a double-ended motor shaft with one hexagonal end. This is useful to diagnose failure and/or to drive the unit into a more favorable position for maintenance.

6.2.1 Electric Motors

Electric motors located in-cell are generally configured as remotely replaceable modules since replacement is likely during the life of the plant. Motor life is short compared to plant life. The major causes of electric motor failure in high-radiation fields are degradation of the electrical insulation and/or the bearing lubricant. Techniques to reduce insulation failure can be stated in order of preference, which include:

1. mounting the motor as far as possible from high-level radiation sources,
2. using a standard high-temperature-resistant motor, with a silicon-free Class H insulation,
3. placing supplemental shielding around the motor,
4. using standard motors with replacement intervals consistent with in-cell life expectancy, and
5. using a high-radiation-resistant, nuclear-qualified motor.

Motor shaft bearing lubrication can be improved (see Sects. 6.2.4 and 6.3) by using radiation-resistant lubricants.

The nominal radiation-resistance ratings of recommended motors are given in Appendix C. Nuclear-qualified motors, satisfactory for reactor containment service, are very expensive and frequently have long delivery schedules. If the radiation dose assessment indicates a life expectancy less than acceptable, consider motors rated for high-temperature service. These provide better radiation stability than ones for standard service and are far below the cost of nuclear-qualified motors. If a motor cannot be located at a suitable distance from the radiation source, supplemental shielding (see Sect. 6.7.1) may be placed around the motor. Depending on the shielding design, motor cooling may be required.

6.2.2 Gear Trains and Reducers

In-cell gear drives are divided into two categories, enclosed and open. Enclosed gearing, chosen for in-cell use in the past, has almost always been from commercial gear reducer or gear box suppliers. This is appropriate because the potential small performance improvement, which might be realized by designing and fabricating a special gear box, is usually not worth the substantially higher cost. As in the case of motors, the useful life of gear train components is limited by the gamma radiation cross-linking of the lubricants and seal materials. The lubricants thicken and the seal elastomers harden, which leads to early failure.

With the aid of the radiation dose assessment, the useful life of gear boxes can be estimated based on the ratings of the lubricant and seal material. If this life is less than acceptable, it can be improved in the same manner as for electric motors (see Sect. 6.2.1). In some cases, it is possible to improve the shaft seal life by replacing the stock seals with more radiation-resistant ones. The useful life of the gear lubricant can be enhanced by replacing the standard lubricant, supplied with the unit, using a radiation-resistant type (See Table 6.1) prior to placement in the process cell area. Systems have been devised for in-cell replacement or replenishment of gear box lubricant. However, these have not been found to be very successful and are not recommended but may be acceptable in specific applications.

It is almost always appropriate to design a motor and gear reducer combination to be replaced as a module to avoid shaft alignment problems associated with remote manipulation. The seals and lubricants of both units may be serviced at the same time, as required.

Open gearing, as shown in Fig. 6.1, is generally designed to operate dry or with a dry-film lubricant and is appropriate for low-speed and/or intermittent applications, but the drive motor must be derated to compensate for the lack of lubrication. The classic machine design approach of having a hardened pinion mating with a softer gear should be followed. To achieve adequate alignment, correct center distances are controlled by careful and precise dimensions. This problem can be minimized by utilizing large-tooth gears, (i.e., minimum diametral pitch).

6.2.3 Mechanical Drive Shaft Couplings

Rotary mechanical drive shaft couplings vary widely, and selections are mutually dependant on alignment, torque, and speed. Motor drives are coupled mechanically in various schemes. Encased gear drives typically have input and output couplings to connect both motors and equipment. Some examples of mechanical drive coupling methods in hot-cell use are shown in Figs. 6.1 through 6.5.

Low-speed couplings can easily be connected and disconnected using remote maintenance techniques when the mating parts are designed with self-aligning features. Such couplings are typically used in low-speed applications and are commonly found in process cell equipment design. Recommended designs are all metal, and hence, do not significantly degrade under gamma radiation.

The method used to remotely connect or disconnect a coupling is limited only by the ingenuity of the designer. Proven, simple designs are usually the best choice. One method is illustrated in Fig. 6.2, relying on coupling engagement by gravity.

High-speed rotary drives generally require precisely aligned motor couplings. Installation and replacement cannot be performed remotely by conventional means. When high-speed is required, as for centrifuge units, the module should be designed to include the drive motor, coupling, and mechanical load without any further subdivision for remote maintenance unless

ORNL–DWG 88–5739

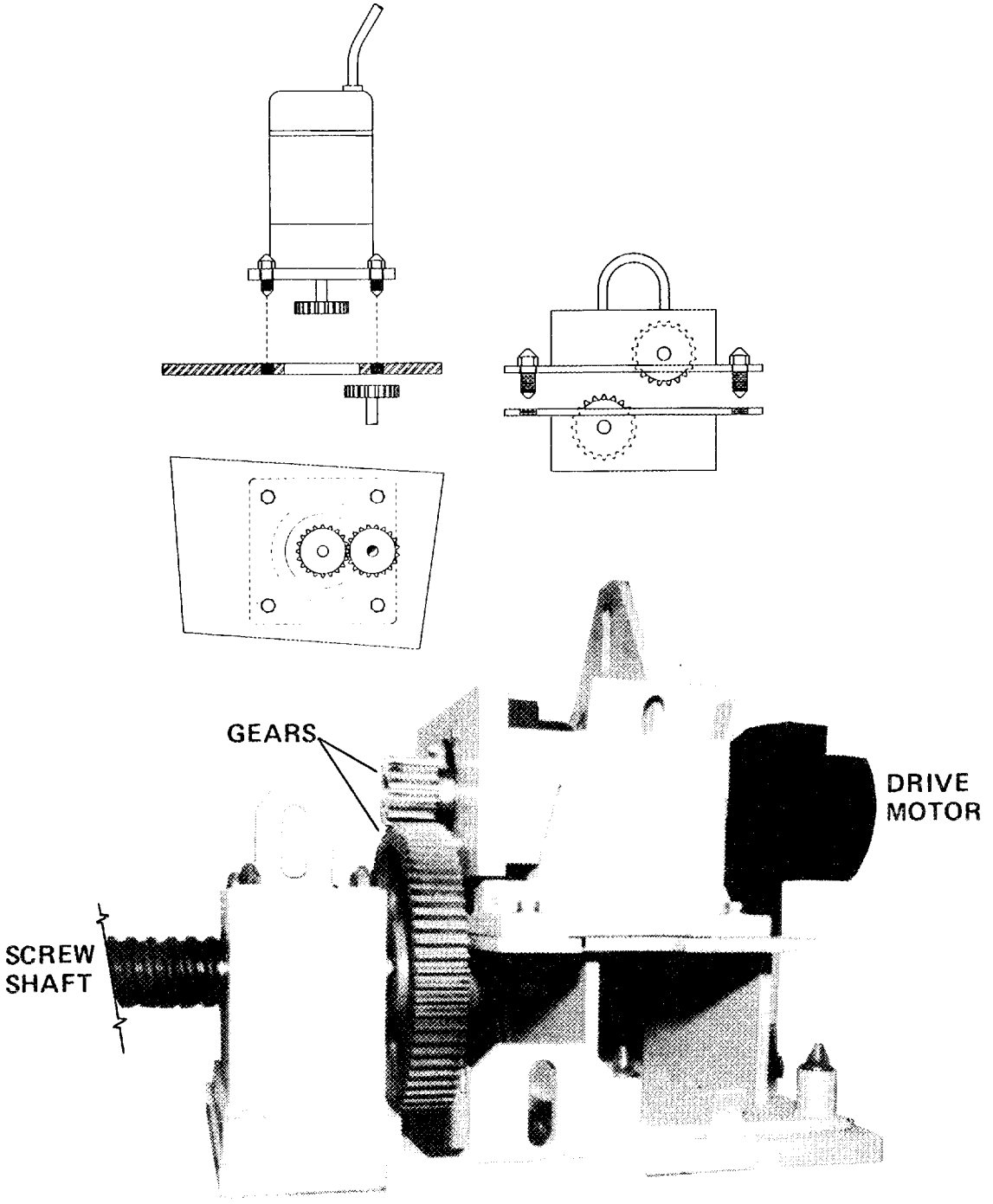

Fig. 6.1. Open spur-gear shaft coupling method.

ORNL–DWG 80–6732A

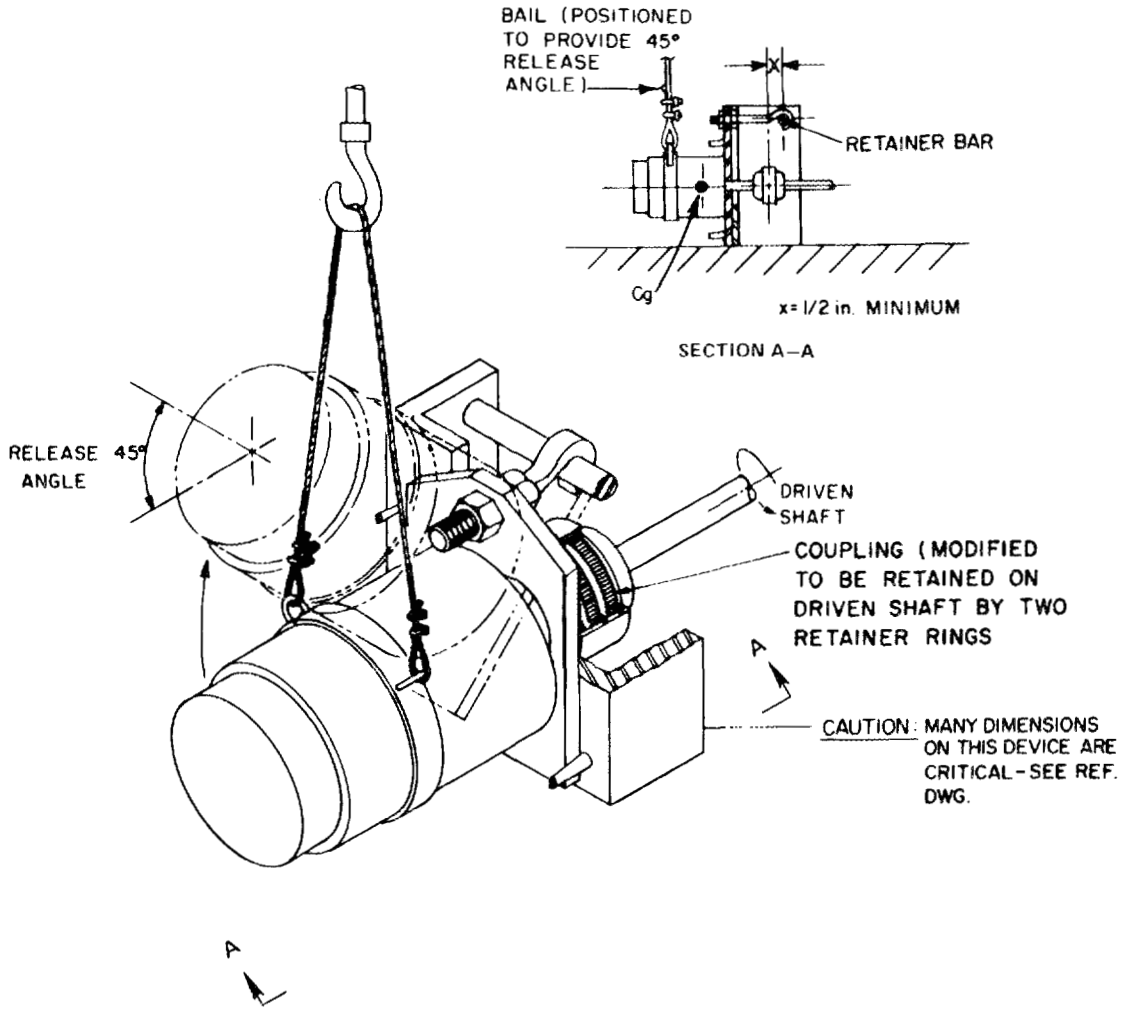

Fig. 6.2. Motor mount for remote assembly.

limited by weight and size. Motor failure would then be corrected by replacing the entire module. Some high-speed motors can be coupled by remote means. These are special designs with tapered engagements to ensure vibration-free shaft connection.

Coupling alignment may also be aided by providing features, like the double-ended motor shaft discussed above, to allow a manipulator to manually rotate the drive shafts.

Commercial low-speed jaw couplings (see Fig. 6.3) are widely available in both carbon steel and, to a lesser degree, stainless steel. When this type of coupling is used in-cell, each half should be pinned or otherwise permanently fixed to the shaft. If the axis of the shafts is horizontal, some horizontal movement of a module is required after it has been lowered to the operating elevation. Instead of pinning, this type coupling may be spline-guided, on one shaft, and spring loaded to automatically engage, after positioning, upon motor startup.

ORNL–DWG 88–5721

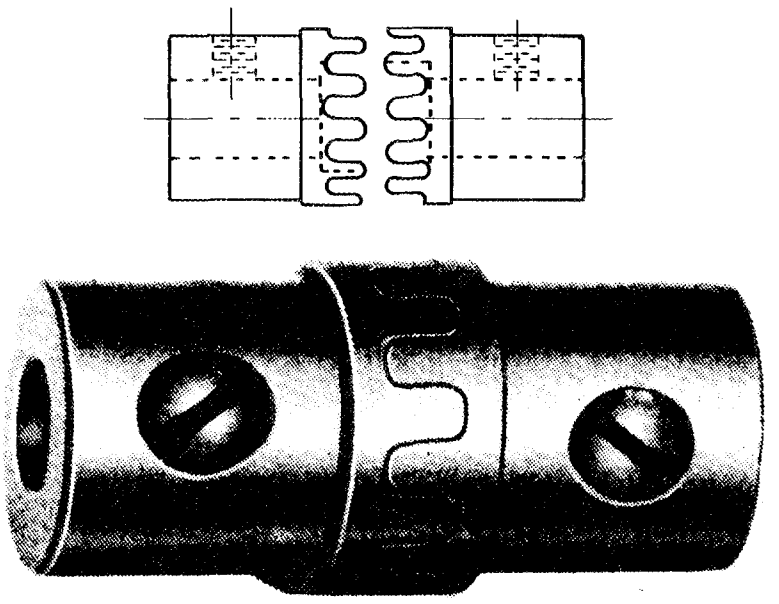

Fig. 6.3. Low-speed commercial jaw-coupling.

Male/female spline shaft couplings are applicable for in-cell use. The lead-in or remote features illustrated in Fig. 6.4 are considered appropriate to facilitate remote installation. As in the case of jaw couplings discussed above, splines require horizontal movement when the axis of the shafts is horizontal.

Pairs of open-spur and bevel gears have been used to couple shafts that have to be decoupled and recoupled remotely. The discussion in Sect. 6.2 on open gearing is relevant when gears are used to couple shafts. Figure 6.1 illustrates this solution. A fabricated coupling that has been successfully tested is shown in Fig. 6.5. The removal and/or replacement of this coupling requires that the shaft be oriented with the opening aligned with the direction of removal.

6.2.4 Bearings

Commercial motors and speed reducers are used dependably for in-cell service. These are nearly always equipped with ball or roller type antifriction bearings, which are found to be the best suited for most applications in hot cells. The use of standard bearings in hot cells is complicated by radiation effects on lubricants and some bearing materials. The bearing lubricant (Sect. 6.4) and seals (Sect. 6.5) are subject to degradation. But, in many cases, the design choice is restricted to accepting the standard bearings and seals in the motors and reducers, as received. The radiation dose assessment (Sect. 6.1.2) can help determine the need to upgrade the expected life of the equipment by improving the radiation resistance of the shaft bearings and seals. New bearings can be flushed and relubricated with radiation-resistant lubricant prior to installation in the process cell areas.

ORNL-DWG 88-5737

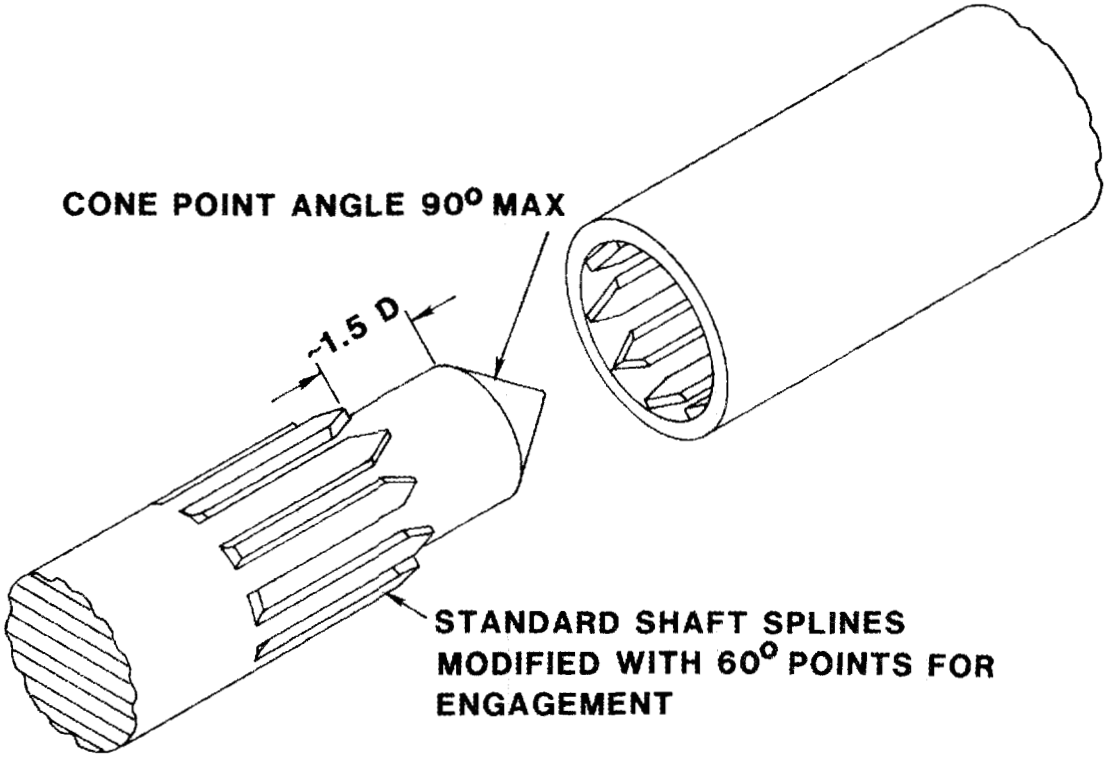

Fig. 6.4. Spline coupling example with lead-in feature.

Unimpregnated graphite bushings are not subject to radiation degradation, offering an alternative for high-radiation locations. Graphite requires a small amount of water, or moisture (50 ppm), in the atmosphere for lubrication. Unfortunately, graphite bushings have several major drawbacks. They can only be used for low loads and speeds, and they require precision fits and alignments. Impregnated or alloy graphite bushings are significantly stronger but are adversely affected by very high-radiation doses because of the radiation effects on the resin used in the impregnating process.

Many types of journal bearing materials are available. The most common are soft metal alloys, brass (or bronze), and plastic. The advantages and standard uses of each of these are well known. The designer should also be cognizant of the following disadvantages in radiochemical process-cell service: (1) soft metal alloys are usually susceptible to severe acid damage and require lubricants that are susceptible to radiation damage, (2) brass or bronze bearings are also subject to acid attack and radiation damage to the lubricant (many of these bearings may require close tolerance alignment that cannot be maintained in the process cell where there is no

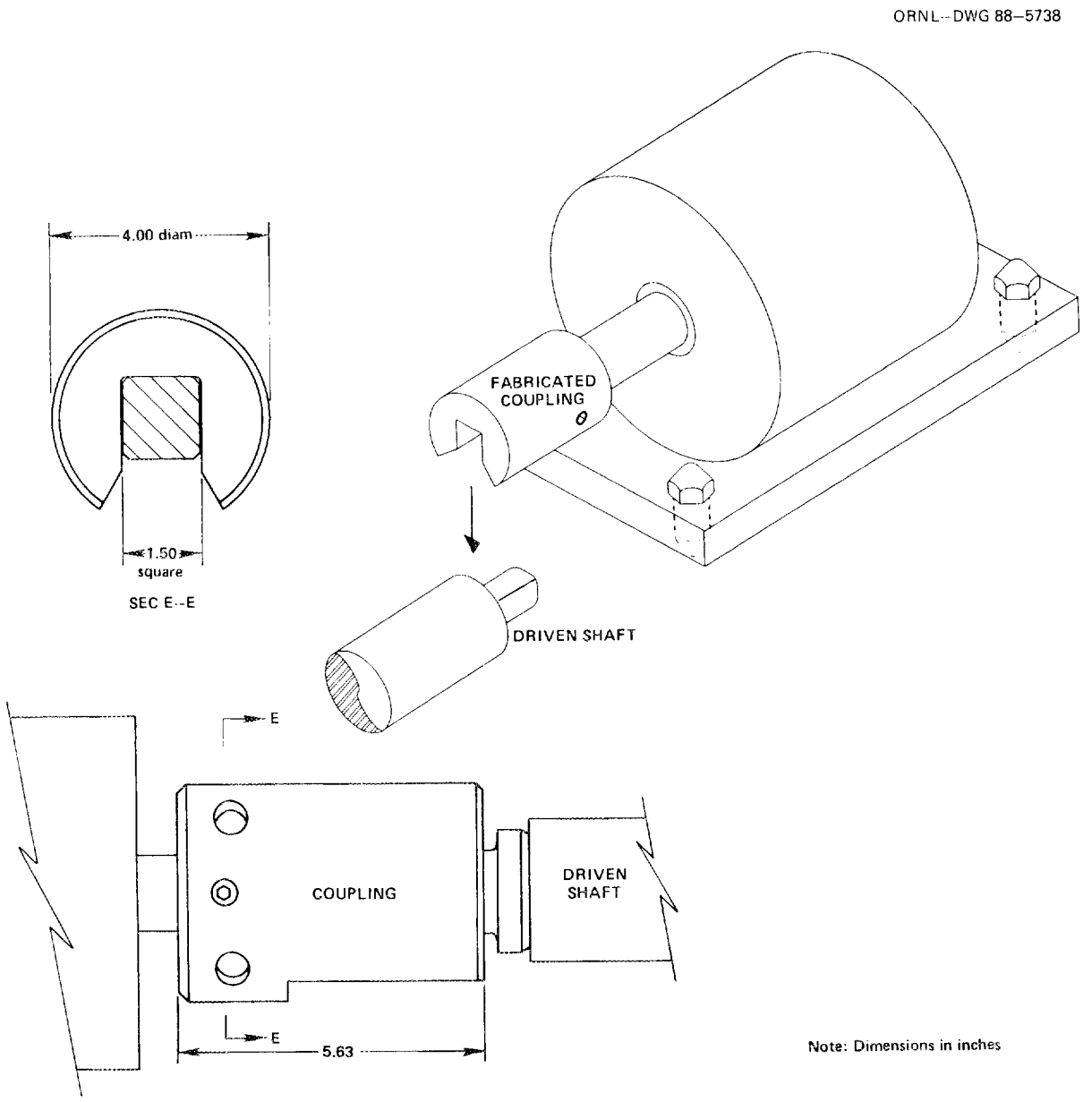

Fig. 6.5. A fabricated coupling example.

capability for machine adjustment), and (3) plastic bearings may have excellent acid resistance but are degraded by radiation. In some slow speed, low-level radiation applications, the bearings may be designed to require no lubrication, thus eliminating a potential problem.

Figures 6.6 and 6.7 illustrate arrangements designed to use commercial, split-housing, pillow-block bearings to be remotely replaceable. These designs increase the size of the bearing assembly. They should be utilized only in cases when it is desirable to provide the capability to replace a bearing independent of a larger or more complex module. The bearing cartridge, tapered insert, and spanner nut would be assembled out-of-cell and replaced as an assembly.

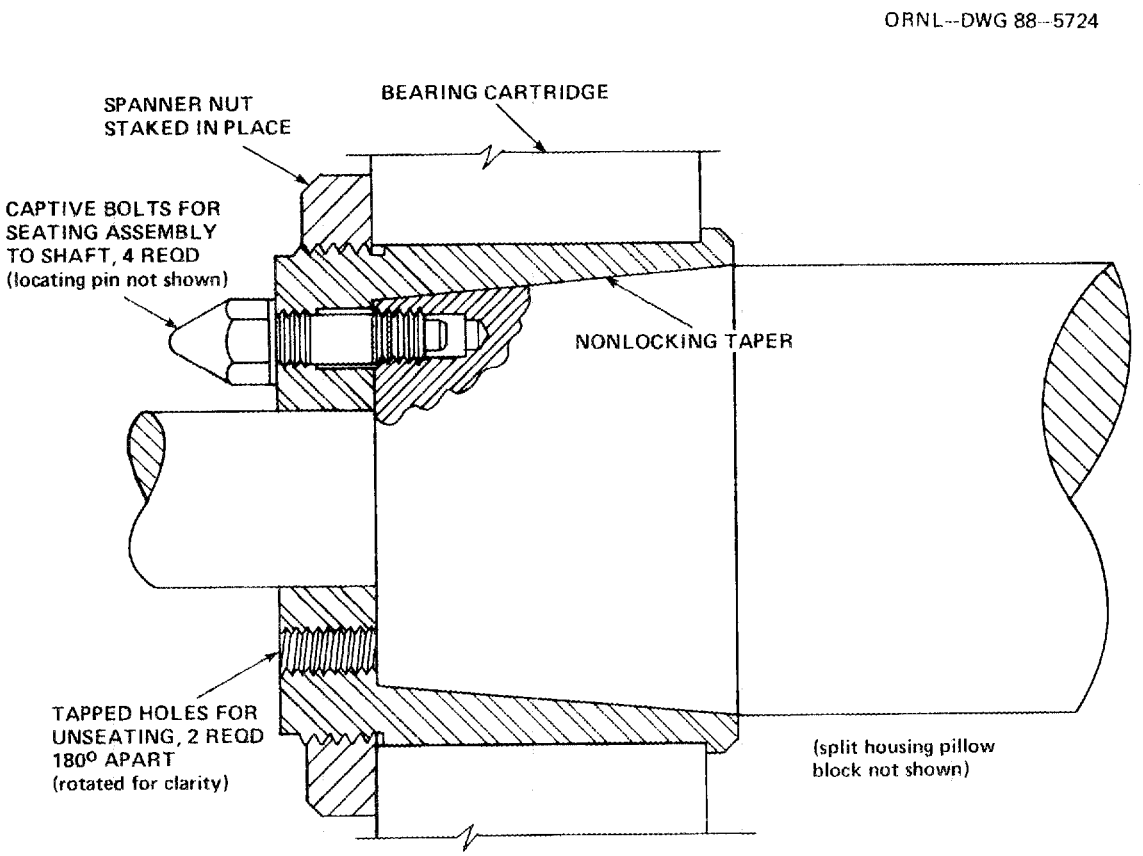

Fig. 6.6. Remotely replaceable bearing assembly for a large shaft.

6.2.5 Power Screws

Power screws have been widely used in hot-cell applications. These offer a convenient, economical way to change the rotary motion and torque of a motor into linear thrust. Both ACME- and ball-type screws have been used in hot-cells. ACME screws and nuts are designed in accordance with ASA Standard B1.3. Ball screws and mating nuts are available from a number of commercial vendors. Both are limited by the need for periodic lubrication of the screw and supporting bearings. Also, the design of power screw systems is complicated by the problem of material selection with both corrosion resistance and wear resistance hardness.

ORNL-DWG 88-5723

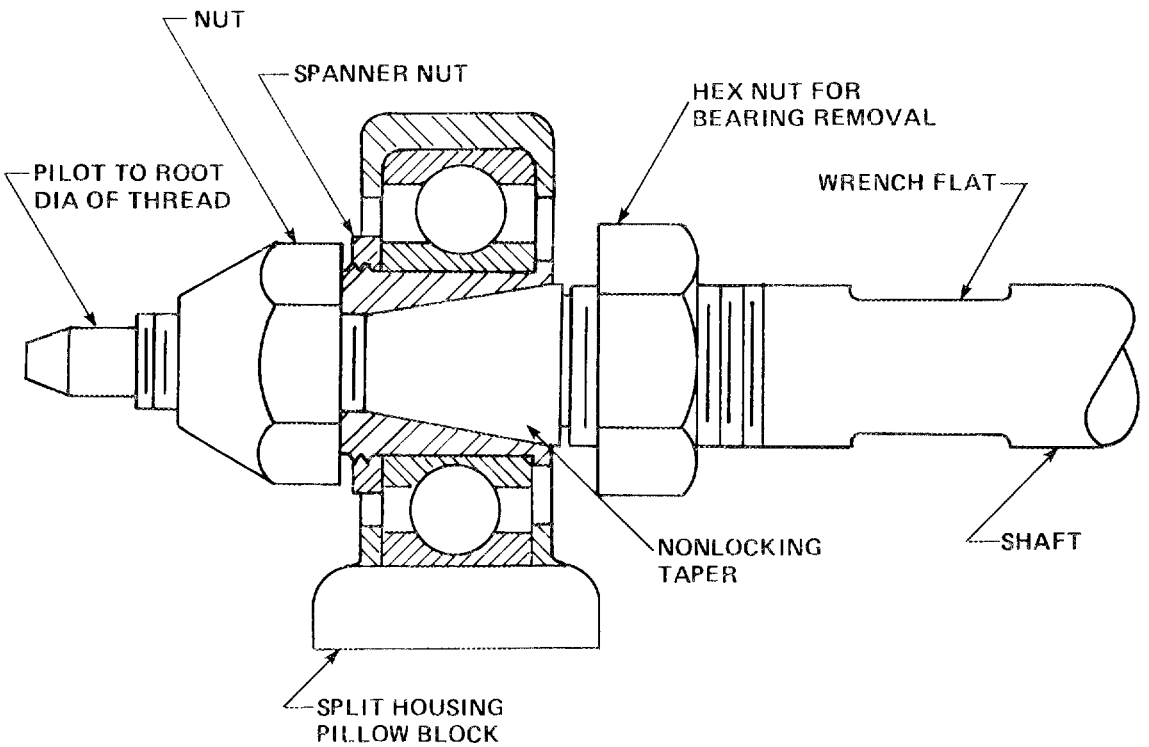

Fig. 6.7. Remotely replaceable pillow block assembly for small shafting.

As in open gear drive design (Sect. 6.2.2), power screws should be designed and sized for dry operation. The screw, nut, and bearings supporting the screw are packaged in a single, replaceable module to facilitate remote maintenance. Recommended practice is to float the nut in the transverse planes with respect to the axis of the screw. This compensates for sag in the case where the screw is horizontal and eliminates the need for precise alignment of the nut and screw.

6.2.6 Electrical Pigtails

A pigtail is the cable bundle that runs from a motor, other electrical device, or instrument component to a junction box. Electrical connections should be made up at the device in a conventional, nonremote manner (i.e., soldered screw terminals). The cable bundle should be structurally secured to the electrical component with a strain relief device or bushing. This arrangement should ensure that no pulling force is applied between the electric junction box and the equipment. An electrical connector (see Sect. 7) designed for remote manipulation is connected to the junction-box end of the pigtail. The cabling in the pigtail should have a radiation resistance sufficient to ensure that failure will occur in the device before a cable failure due to radiation damage. If the pigtail is required to flex as a part of normal operation, it should comply with Sect. 6.2.7.

6.2.7 Electrical Cable Carriers

When there is relative movement between the cable ends in normal operation, support to limit the cable flexing should be provided according to National Electrical Code guidelines with

no less than the minimum radius based on cable diameter. If the relative movement is small, adequate support can be achieved by supporting the bundle as shown in Fig. 6.8. For greater movement, cable festoons have been used as seen in Fig. 6.9; however, these systems represent a remote handling problem unless a method of securing festoon carriers for maintenance is included. Commercially available "flexible cable-ways" have been successfully employed to manage and protect large cable bundles in motion (Fig. 6.10). Remote maintenance testing has demonstrated satisfactory removal and replacement by servomanipulators and an overhead crane.

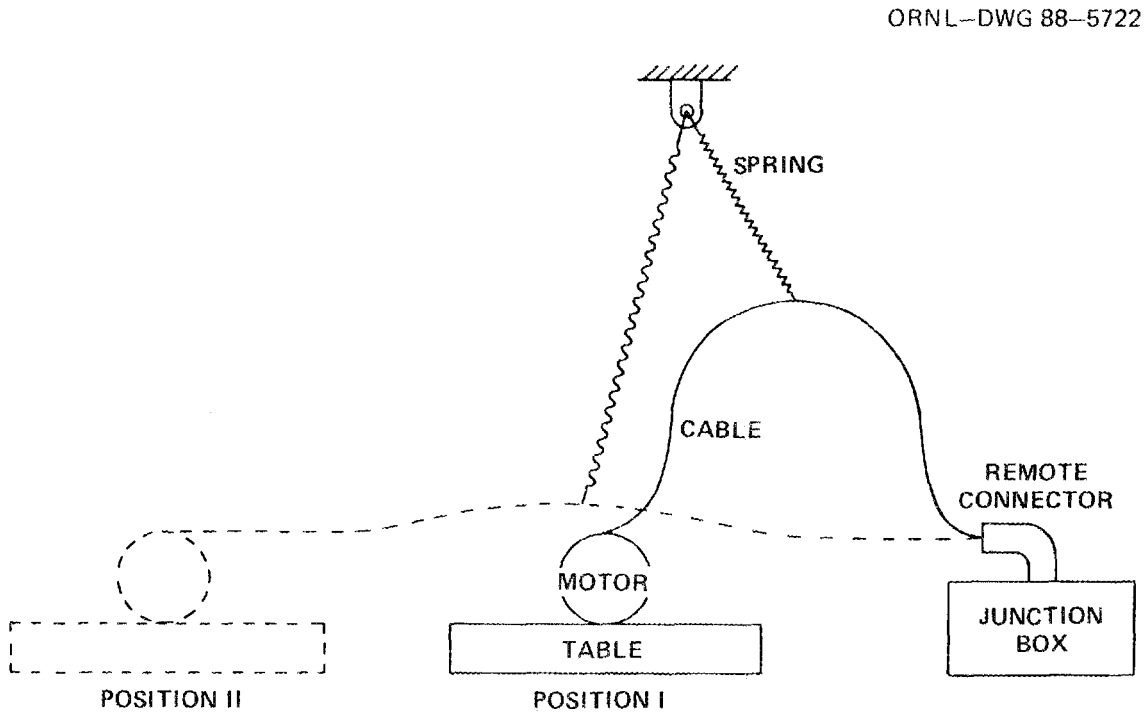

Fig. 6.8. Short-motion cable suspension.

6.2.8 Linear Motion Devices

Several techniques have been successfully utilized in providing for linear movement in remotely maintained machinery. Wheels running on tracks have perhaps been used most often. The combination of V-grooved wheels and track on one side and cylindrical or crowned wheels on a flat track for the opposite side is acceptable. Cylindrical or crowned wheels on flat tracks for both sides, with similar wheels perpendicular to the load bearing wheels for guidance, have also been successfully employed. The conventional practice of hardened wheels running on tracks fabricated from as-rolled stock is satisfactory. The major problem that the designer will encounter is the recurring of bearings and their lubrication (Sect. 6.2.4).

Commercial ball bushings and shafts can be used for some in-cell applications. The bushings, their housing structure, and the shafts with their mounting structure should be in the same replaceable module. Difficulties have been experienced with remote assembly of ball-bushing and shaft assemblies. Designers face two problems with ball bushings. First, there is

ORNL–DWG 88–5735

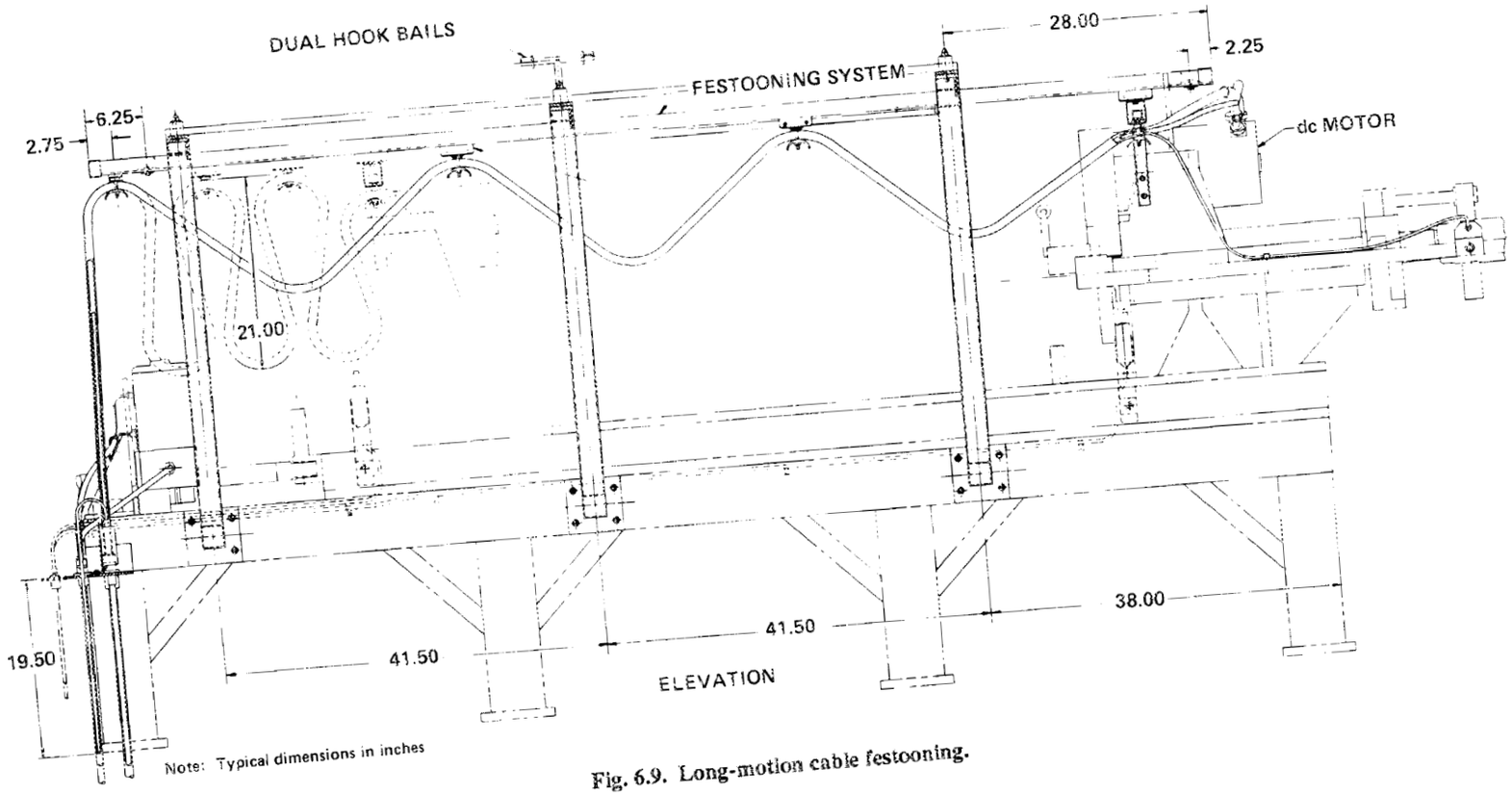

Fig. 6.9. Long-motion cable festooning.

ORNL–DWG 88–5736

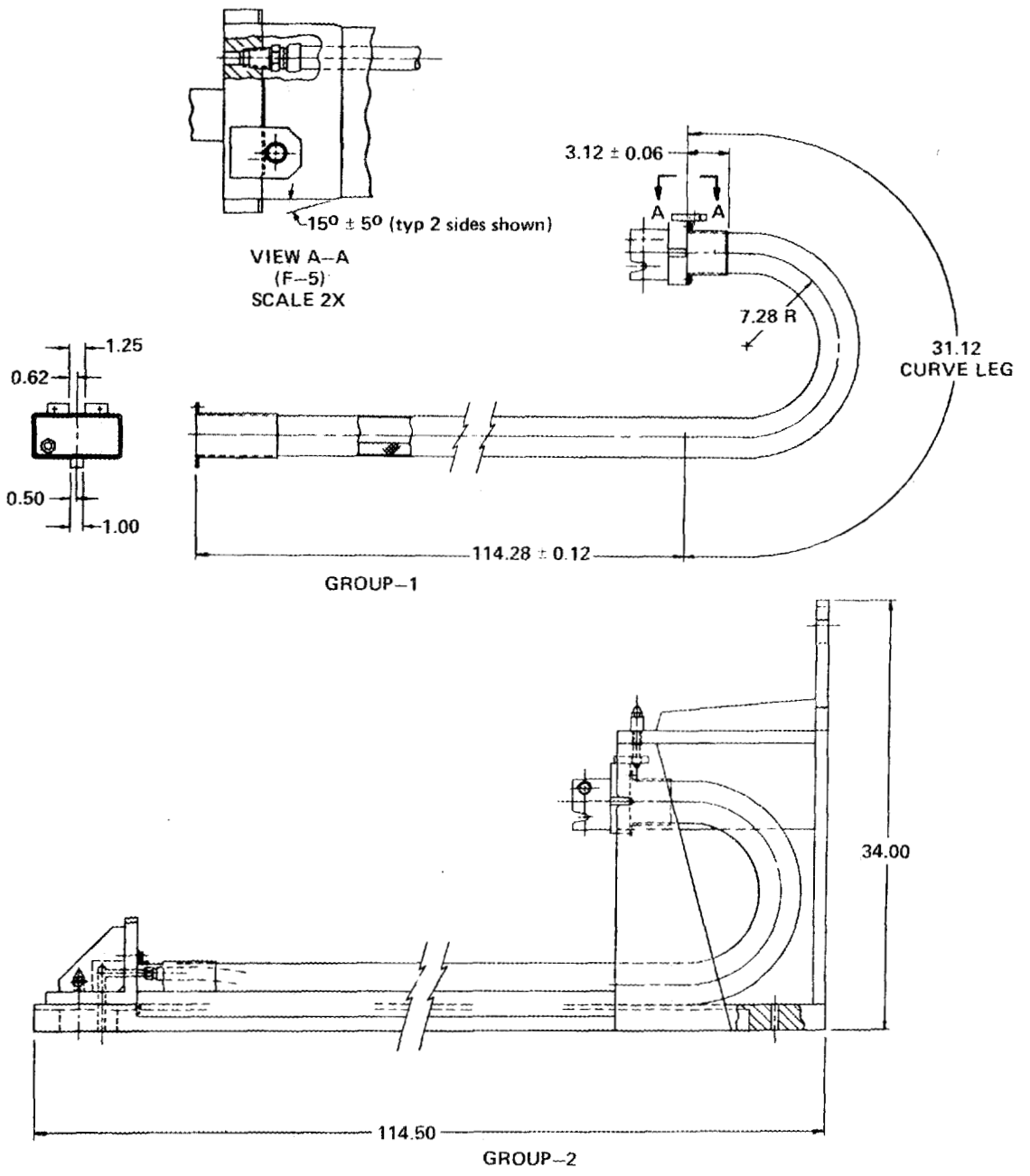

Note: Typical dimensions in inches

Fig. 6.10. Flexible cable-way for large bundles.

the problem of periodic relubrication, which generally requires a lower service factor in the design of the components to compensate for this phenomena. Second, there is the question of procuring the components in corrosion-resistant materials since selection is limited.

Round-ways have also been successfully used in-cell to a limited degree. With round-ways it is not necessary to package the round-way bearings and the track in the same module because alignment is less critical than with ball bushings; however, the problems with lubrication and corrosion resistance do exist.

6.3 LUBRICANTS

Remote manipulator application of lubricants in the process areas of hot cells is not recommended. Rather, the practice has been to use radiation-resistant lubricants during initial lubrication of the equipment. This is usually done before the equipment enters the process cell. Table 6.1 lists a summary of nuclear radiation-resistant lubricants.

One recommended design practice to select components that are expected to receive poor lubrication is to apply a severe service factor of 1-1/2 to 2. This reduces wear on poorly lubricated parts and extends life.

Many applications such as fastener threads, jack screws, or slide-ways may require an uncured layer of graphite or molybdenum disulfide. For low-use applications, this type of lubricant may be preferred over radiation-resistant grease since dry films do not trap airborne contamination.

Special-purpose, dry lubricants with good radiation resistance such as soft metal films, phosphating, flame spray, silicates, and ceramics are also available. All of these are difficult to apply and could not practically be replaced in-cell. For this reason, they should be used only under circumstances where application outside the cell is possible.

6.4 SEALS

6.4.1 Mechanical Static Seals

The design of static seals is basically the same for both inside and outside the hot cells. Several additional constraints are placed on hot-cell seals, for example:

1. **Elastomeric Seal Rings** – Many conventional elastomers and thermoplastic resins may be used where the radiation level is 10^8/rad or greater. Appendix B contains information on the effects of radiation on these materials. Often an encased plastic will continue to seal despite severe damage. For this reason, the degradation levels listed in Appendix B should be considered conservative for static seals that experience no translational forces. For higher radiation levels, Adiprene Cm* urethane rubber is suggested for static O-rings. It exhibits good properties beyond 10^9 rad dose levels and has a proven record in hot-cell equipment. Elastomeric O-rings are very difficult for hot-cell maintenance equipment to handle. Provisions should be made for rings more than 5 cm (2 in.) in diameter to be installed with the O-ring groove horizontal. In addition, captive O-ring grooves should be used if the module is to be handled in-cell with the seal exposed.
2. **Metallic seal rings** – Metallic seal rings (Table 6.2) may be required in high-radiation fields. The high sealing forces and high-quality contact surfaces required for metallic seal rings tend to offset their usefulness. An additional constraint on metallic rings is that they must be installed and handled by the in-cell maintenance equipment. This may mean the addition of a "sucker stick" (a flat-tab handle attachment to the ring that can be gripped by a manipulator, as in Fig. 4.10) or an access slot in the ring groove. A method of retaining the seal while the module is transported or under repair may also be required.
3. **Packing** – Two types of stranded commercial packing, asbestos-graphite (John Crane†) and graphite (Grafoil‡), offer excellent radiation resistance. However, packing presents two major

---

*E. I. duPont de Nemours & Co., Inc., Elastomer Chemicals Dept., Wilmington, DE 19898.
†John Crane Packing Corp., Morton Grove, IL 60053.
‡Union Carbide Corp., Carbon Products Division, Chicago, IL 60606.

Table 6.1. Summary of nuclear radiation-resistant lubricants

Product	Operating range[a] °F (°C)	Radiation dose limit (10^8 rads)	Product description	Recommended use
NRRG-159 (NLGI Grade 2-1/2)	-10 to 325 (-23 to 163)	30	Special synthetic aromatic oil; sodium amate thickener; selenide oxidation inhibitor	Antifriction bearings; motors; pumps; accessories
NRRG-235 (NLGI Grade 2)	0 to 200 (-19 to 93)	50	Synthetic aromatic oil, silica thickener; selenide oxidation inhibitor. Contains graphite and molybdenum disulfide as "residual lubricants"	Low-speed, high-load sliding surfaces, screw mechanisms; Provides residual lubrication in remote machinery, such as remote valves
NRRG-335 (NLGI Grade 2)	0 to 250 (-18 to 121)	50	Synthetic aromatic oil, sodium amate thickener; selenide oxidation inhibitor	Antifriction bearings, valve actuating and screw mechanisms
NRRG-509 (NLGI Grade 0)	0 to 200 (-19 to 93)	50	A soft (ASTM worked penetration 360 to 380) version of NRRG-335 containing molybdenum disulfide	Special product for enclosed gear trains or any services including a semifluid lubricant
Chevron Industrial Grease Medium[b] (NLGI Grade 1-1/2)	-10 to 325 (-23 to 163)	10	Mineral oil;sodium amate thickener, oxidation and rust-inhibited; excellent worked stability	Antifriction bearings; motors; pumps; accessories
Chevron SRI Grease 2[b] (NLGI Grade 2)	-10 to 325 (-23 to 163)	5	One medium grade; mineral oil; polyurea thickener, oxidation and rust inhibited	Antifriction bearings; motors; pumps; accessories

Table 6.1. (continued)

Product	Operating range[a] °F (°C)	Radiation dose limit (10^8 rads)	Product description	Recommended use
NRRO-358	+20 to 225 (-7 to 107)	50	Low viscosity aromatic base oil plus selected polymers (some split and some crosslink) to provide a "constant viscosity" effect; selenide-inhibited	Hydraulic pumps and accessory equipment; gear trains; control mechanisms
NRRO-360	+20 to 225 (-7 to 107)	50		
Chevron OC Turbine Oil[b]	+20 to 225 (-7 to 107)	0.5	Various viscosity grades; blends of solvent refined paraffinic mineral oils; oxidation-inhibited	Industrial steam turbines and related uses; general purpose oil lubrication

[a]In air; can be extended in inert atmosphere.
[b]Conventional lubricant which provides satisfactory lubrication under low dosage radiation.
Source: Chevron Technical Bulletin No. 10, Chevron U.S.A., Inc., 1978.

Table 6.2 Static seals with hot-cell applications

Seal	Composition	Size range		Make-up force	Seal press	Temperature range (°F)	Noncircular	Phone number (FTS number)	Manufacturer(s)
		Diameter	Cross section						
E-Seal	Coated Inconel	11/4/12	0.108/.218	20 100 lb/in.	ATM/4000	70 to 1200	No	301-937-4010 on net	Press Science, Inc.
X-Seal				-DISCON-TINUED-				213-269-9181 on net	Wiggins Conn. Div.
V-Seal Mk 1	Coated 300 or Hast	1/4/19	1/32 / 1/8	400	ATM/15000	-450 to 1900	No	213-837-5101 on net	Parker Seal Div.
V-Seal Mk II	Coated 718N or 321	5/8/00	3/64 / 1/18	350	10^{-6}/30000	-450 to 1900	No		Parker Seal Div.
O-Ring (Elas)	Plastics	Infinite		Very low	10^{-6}/10000	-175 to 500	Yes		Parker Seal Div.
Integral	Elastomer metal base	All custom	0.050	Very low	10^{-10}/20000	-65 to 450	Yes		Parker Seal Div.
K-Seal	Coated metal	1/2/72	0.090/0.300	18/280	ATM/20000	-450 to 1200	No	213-843-4000 on net	Haskel Eng. & Supply Co.
Grayloc	Metal	1/2/40	0.125/0.750	Very high	/10000	-450 to 1700	No	713-747-1240 88-527-4011	Grayloc Tool Co.
Hydrodyne	Coated metal	1/4/24	1/16 / 1/4	Very low	10^{-4}/75000	-450 to 2200	No	213-764-0570 on net	Hydrodyne Div. of FPI, Inc.
Spiral-wound	Coated metal filled	Standard flg. 2 → 24	1/8 / 11/4		/2500			609-963-1130 88-488-5000	Flexitallic Gasket Co.

Table 6.2 (continued)

Seal	Composition	Size range		Make-up force	Seal press	Temperature range (°F)	Noncircular	Phone number (FTS number)	Manufacturer(s)
		Diameter	Cross section						
fusible metal	Low melt point alloys	Infinite	Up to 2 in.	*a*	Vac/35	-600	Yes		None
Conoseal	Metal	1/12			Vac/20000	-450 to 2000	No	213-478-0921	Aeroquip
UAP C-Ring	Coated metal	0.126/280	0.032/1 / 3/8	Half of O-Seal 250/750	10^{-10}/50000	-450 to 3000	Yes	803-783-1880 on net	UAP Components, Inc.
J-Ring (Mt)	Coated metal	0.250/300	0.031/0.625		10^{-10}/50000	-450 to 2200	Yes		UAP Components, Inc.
Lo load seal	Coated metal	0.250/6	0.036/0.093	25/600		-450 to 2500	No	203-239-3341 88-643-8111	Advanced Products Co.
Corrugated PL	304 stainless steel	0.375/10		700/800	Vac/6000	-450 to 1300	Yes		Advanced Products Co.
Solid wire	Metal wire	0.312/300		6900	$>10^{-6}$	-450 to 1200	Yes		Advanced Products Co.
Sprg. energ.	300 Series SS	1/120	0.125/0.500	600/2100	10^{-10}/100000	-450 to 1200	Yes		Advanced Products Co.
Clam seal				-DISCON-TINUED-					Advanced Products Co.
Flat washer	Copper	1/10	~1/2	Very high	10^{-11} ATM	-450 to 950	No	482-1746 Local	Varian Associates

Table 6.2 (continued)

Seal	Composition	Size range		Make-up force	Seal press	Temperature range (°F)	Noncircular	Phone number (FTS number)	Manufacturer(s)
		Diameter	Cross section						
Wheeler	Metal wire	To order		Very high	10^{-11}/ATM	-450 to 900	No		Varian Associates
Gamah	Metal	1/2/60	0.125/0.750	300	0/60000	-320 to 3180	Yes	303-364-6411 88-234-3131	Gamah Div. of Stanley Aviation Corp.
K-Seal (S/II)	Plated metal	25/60	0.082/0.375	100	Vac/70000	-423 to 1800	No	213-849-6581 on net	Sierracin/Harrison
Condren	ASB-SS	2/24 std. flg. or special order	3/16	Very high	Vac/200000	-360 to 1200	Yes	201-247-6800 342-5500	Condren Corp.
Grafoil	Graphite packing	To order		Very low	ATM/2000	-400 to 1200	Yes	On net	John Crane Parking Co.
Omega	Monel, 17-4 Inconel	0.27/18	0.29/0.104	300	Vac/25000	1420 to 1750	Yes	716-633-5990 437-4411	Servotronics, Inc.
Apex	Monel, 17-4 Inconel	0.27/18	0.29/0.104	300	Vac/25000	-420 to 1750	Yes		Servotronics, Inc.
Graphite metal insert	Graphite SS	27/32/20	1/32 / 1/16	<24,000		-240 to 1600	Yes	312-454-2000 on net	Union Carbide Corp.
ASB gasket	Asbestos	Infinite					Yes		

[a]Not applicable.

problems to the hot-cell equipment designer. First, it is very difficult to remove used packing and clean the packing cavity adequately. Second, repacking a seal is very difficult. For these reasons, packing is generally used only with disposable equipment items such as valves.

6.4.2 Rotary Shaft Seals

There are several commercially available seals that are generally acceptable for hot-cell service. These are usually flat face-to-face seal ring shaft assembly cartridges in a variety of radiation-resistant ring material combinations to suit the type of service (i.e., carbon-versus-carbon, or versus-ceramic, or versus-stellite, or ceramic-versus-graphite, etc.) selected for temperature, pressure, and fluid-type service. One ring is fixed to the shaft and the opposing ring is attached to the housing with a metal bellows to compensate for linear and slight angular movement. The standard versions of these seals generally utilize elastomeric gaskets to seal the cartridge to the housing. In high radiation they may have to be replaced with metallic static seals. Labyrinth seals are acceptable for some in-cell applications. These are all-metal seals and usually have no special problems associated with in-cell service.

6.4.3 Linear Shaft Seals

Metal bellows seals are the most effective means for sealing linear motion shafts in hot-cell applications. The designer must recognize the pumping action of the bellows and avoid an overpressurized condition during operation. Elastomeric wiper seals have also been used. However, these do not operate very well without lubrication and are subject to radiation damage.

6.5 PNEUMATIC AND HYDRAULIC SYSTEMS

The use of pneumatics and hydraulics in hot-cell systems has been limited. For this reason the experience base in this technology is also limited.

6.5.1 Pneumatic Systems

There are several disadvantages to in-cell pneumatic systems. First, if the system is sizeable and/or the pressure significant it represents a source of stored energy, which could have serious side effects in the event of equipment failure. Also, commercial pneumatic components are designed to operate with oil added to the air or gas. Unless a closed loop system is used, the oil is discharged into the cell atmosphere and can collect on windows or TV lens and impair viewing. Commercial components have numerous elastomeric parts that have a limited life in high gamma fields.

Even with these disadvantages, pneumatics do have some applications in-cell. Cylinders are attractive for relative small linear motions, such as actuating valves, operating toggle devices, etc. Commercial cylinders can be used if the reduced life caused by operating without lubrication and deterioration of components due to radiation is acceptable.

Cylinders that do not use elastomeric or organic materials and are designed to operate on oil-less pneumatics have been produced and tested (see Fig. 6.11). It is noted that this cylinder will leak operating gas into the cell because the rod seal requires some leak rate for dry-film lubrication.

6.5.2 Hydraulic Systems

The utilization of hydraulics in hot cells has been practically zero. The primary reason for this has been that most hydraulic systems exhibit leakage, and cleaning up and disposing of organic-based fluids is difficult at best. Conventional, hydraulic fluids are very susceptible to

ORNL-DWG 88-5740

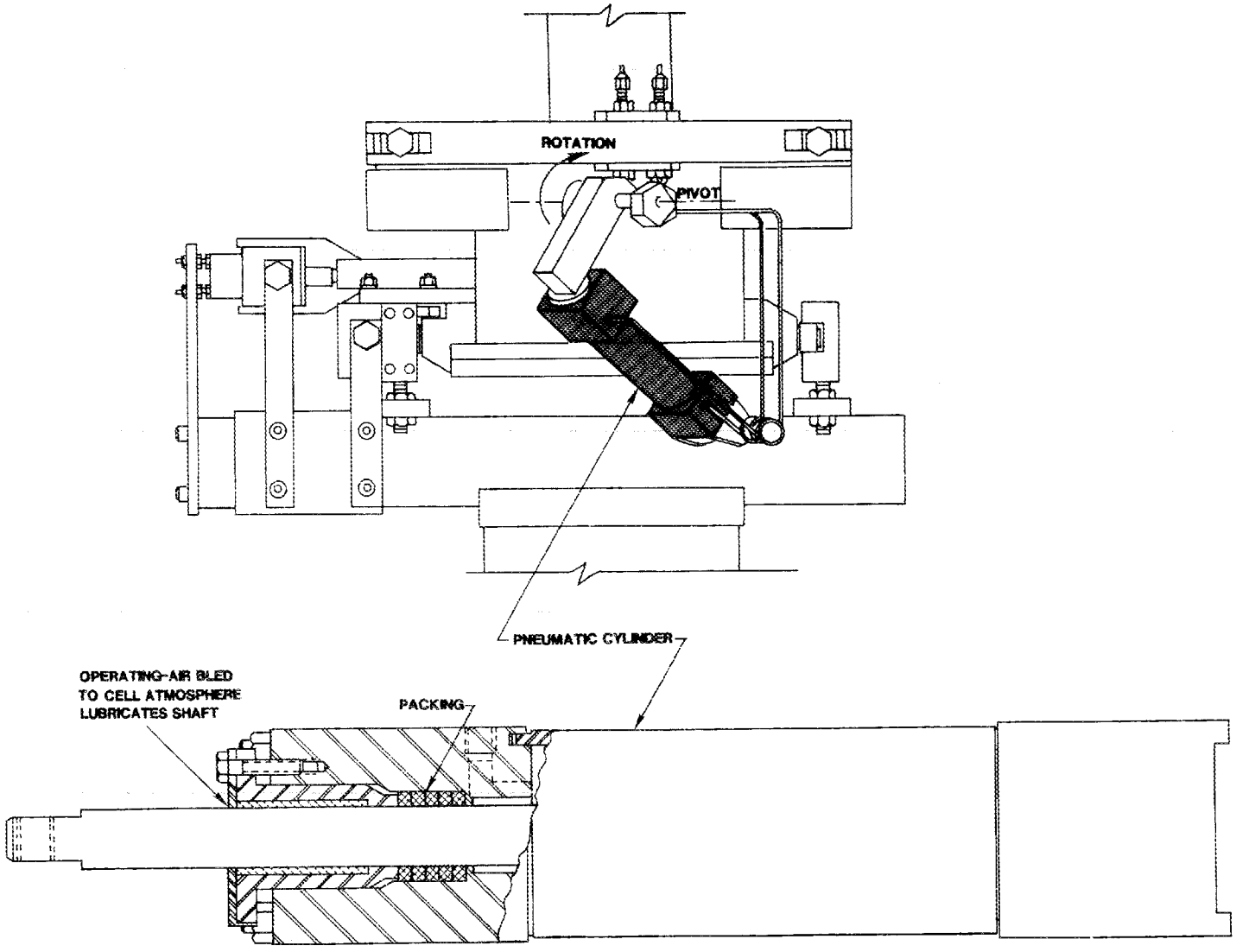

Fig. 6.11. An oil-less pneumatic cylinder for in-cell service.

radiation damage. Recent developments in high water-base hydraulic fluids[5] would eliminate many of these objections, and several systems that use these fluids, including a fuel-assembly shear, have been designed, fabricated, and cold-tested. However, in-cell experience with hydraulics is limited; hence, these should be utilized with caution.

6.6 IN-CELL SENSORS AND ACTUATOR CONTROLS

In-cell sensors should be selected from the types that require no in-cell adjustments during recalibration. These adjustments should be made out-of-cell. Sensor systems should provide a continuation of correct measurement output upon returning to a powered-up condition following a total loss of power including any back-up battery system. Any sensor that can be isolated from its source of measured variable (for instance, the closing of a valve in a process line to a pressure transducer) must have limit-of-travel sensors monitoring the position of the isolation device.

All in-cell limit switches should have the wires from both the normally closed and normally open contacts brought out-of-cell for monitoring. Control logic should be written to detect either open or shortened wiring conditions, and the opening of a normally closed limit switch should be the end-of-travel detected actuation. All in-cell limit switches should be energized by 24 V dc to minimize the insulation requirements on the in-cell wiring. Critical actuators should have three independent limit-of-travel sensors at each end of the actuator travel. Each set of three sensors would then be used in the control system in a two-of-three voting scheme.

Each end-of-travel of a drive system should have two sequentially actuated end-of-travel sensors. The first actuated should be used as a zero or full stroke indicator for position transmitter calibration. The second actuated at each end should be used as an over-travel system shutdown.

Each rotary actuator should have a resolver type of position transmitter for position monitoring when required by the control system to be positioned at locations other than the end-of-travel limits. All mechanical drives should have some type of signal flag, which indicates that the drive is in motion and can be seen from a system monitor if available. Each actuator motor should have current monitoring of its power, so shutdown can be accomplished on an overload condition. Software timers should be provided to detect excessive actuator operation times. Certain actuator systems, which depend on their position monitoring systems for ability to be driven to one of the end-of-travel limit sensors for position measurement recalibration, should have a mechanical counter or a mechanical position indicator such as a pointer which moves across a visible seal and can be seen from a system monitor in case the position monitoring system fails. These would be used to reset the position transmitter to the correct position after position monitor maintenance.

6.7 COVERS AND ENCLOSURES

6.7.1 Unit Shielding

In preceding sections, discussions covered local or unit shielding to protect components from radiation. There are three materials that are generally employed for such shielding: steel, lead, and depleted uranium. Steel presents few design or fabrication problems and is the most economical. However, it is the least effective from the standpoint of providing protection.

Lead metal is a more effective shielding material than steel but is more difficult to design and fabricate. Lead is frequently encased in stainless steel for protection and to facilitate handling. If the shielding enclosure is of rectangular geometry, lead plate may be stacked in an open stainless steel box and the top welded in place. When the shape of the shield is cylindrical or

complex, a steel or stainless steel shell is fabricated and filled with molten lead or lead shot. Lead pouring is a unique fabrication technique; hence, when designing cast-lead shields, seek guidance from an experienced lead fabricator.

Depleted uranium is a more effective shielding material than lead, but the design and fabrication problems associated with uranium are far more complex. Consequently, the cost is also higher than for lead or steel shields. As with lead pouring, it is imperative that competent advice be sought before proceeding to design depleted uranium shields.

6.7.2 Isolation Enclosures

It is frequently necessary to isolate systems or subsystems of mechanical equipment from each other or the cell atmosphere. This is generally accomplished by designing and fabricating metal enclosures that have access doors or panels that are opened or removed for maintenance. The problems encountered with enclosures are in sealing the doors and panels. The material problems associated with gaskets are discussed in Sect. 6.4.1. The second difficulty encountered is in achieving the degree of flatness necessary on the sealing surfaces. This is due to combinations of physical size of the openings and designers not recognizing the rigidity requirements for machining the surfaces.

6.8 OSHA CONSIDERATIONS

There are no OSHA requirements on hot-cell equipment after it is installed in the process cell area as long as human access to the cell has ceased. However, if mechanical equipment is to undergo a development or cold-testing phase, compliance with applicable OSHA regulations is required. The required personnel guards and shields generally interfere with remote maintenance and should be removed once the equipment is installed in cell.

7. CONNECTOR DESIGN CONSIDERATIONS

This section discusses characteristics and design considerations for both electrical and fluid connectors utilized in hot cells. Connectors provide controlled break points in electrical or fluid lines and are normally used in pairs on ends of removable lines known as jumpers. Jumpers enable convenient disconnecting of other equipment modules from the process systems for repair or replacement. Jumpers and their associated connectors exert a strong influence on plant design, operation, and availability. They are basic in most remote maintenance operations and their use in large numbers, coupled with the spatial envelope required for access and operation, often affects equipment design, the layout of the equipment and piping systems, and ultimately influences the cell size.

Various tests have been conducted to examine the handling and performance characteristics of connectors. There is also an extensive experience base from the use of connectors in existing hot cells. This section briefly summarizes the results of these tests and operating experience, particularly as they influence equipment design.

The choice of a connector for a particular application depends to a very great extent on the characteristics of the available remote maintenance equipment. With advanced servomanipulators with force-feedback capabilities or with through-the-wall mechanical manipulators, the choice of connectors is somewhat greater than it is with power arms or crane hooks.

7.1 FLUID CONNECTORS

7.1.1 Hanford-Purex Connector

Several fluid connectors have been specifically developed for remote operations. The Hanford-Purex connector has been widely used for pipes with diameters in the 50 to 100 mm (2- to 4-in.) range. This connector is similar to a 3-jaw gear puller and uses a single bolt to achieve the required sealing force between self-aligning male and female hubs. This requires an angled connector design and is not available as an in-line, straight-through connector. All process wetted parts can be made of corrosion-resistant materials. The original design of this connector used either Teflon, glass-reinforced Teflon, or other plastic/elastomeric seals; hence, its usage was restricted to relatively low accumulated gamma dosages (less than 10^6 rad). This connector design has been improved by ORNL and several seal manufacturers to accept several types of more radiation-resistant seals, including metallic- and graphite-based materials. This connector is very rugged and can be handled by all types of remote maintenance equipment including power arms and impact wrenches suspended from crane hooks.

The drawing of a Hanford-Purex, 3-jaw connector (Fig. 7.1) shows the design modifications required for the connector to accept radiation-resistant seals. The Gamah seal is a product of Stanley Aviation Corporation, and the Grayloc seal is made by Gray Tool Company, Inc. The Grafoil seal is a commercially available, soft-laminated graphite material that, although radiation resistant, is somewhat fragile, difficult to handle with manipulators, and may leave

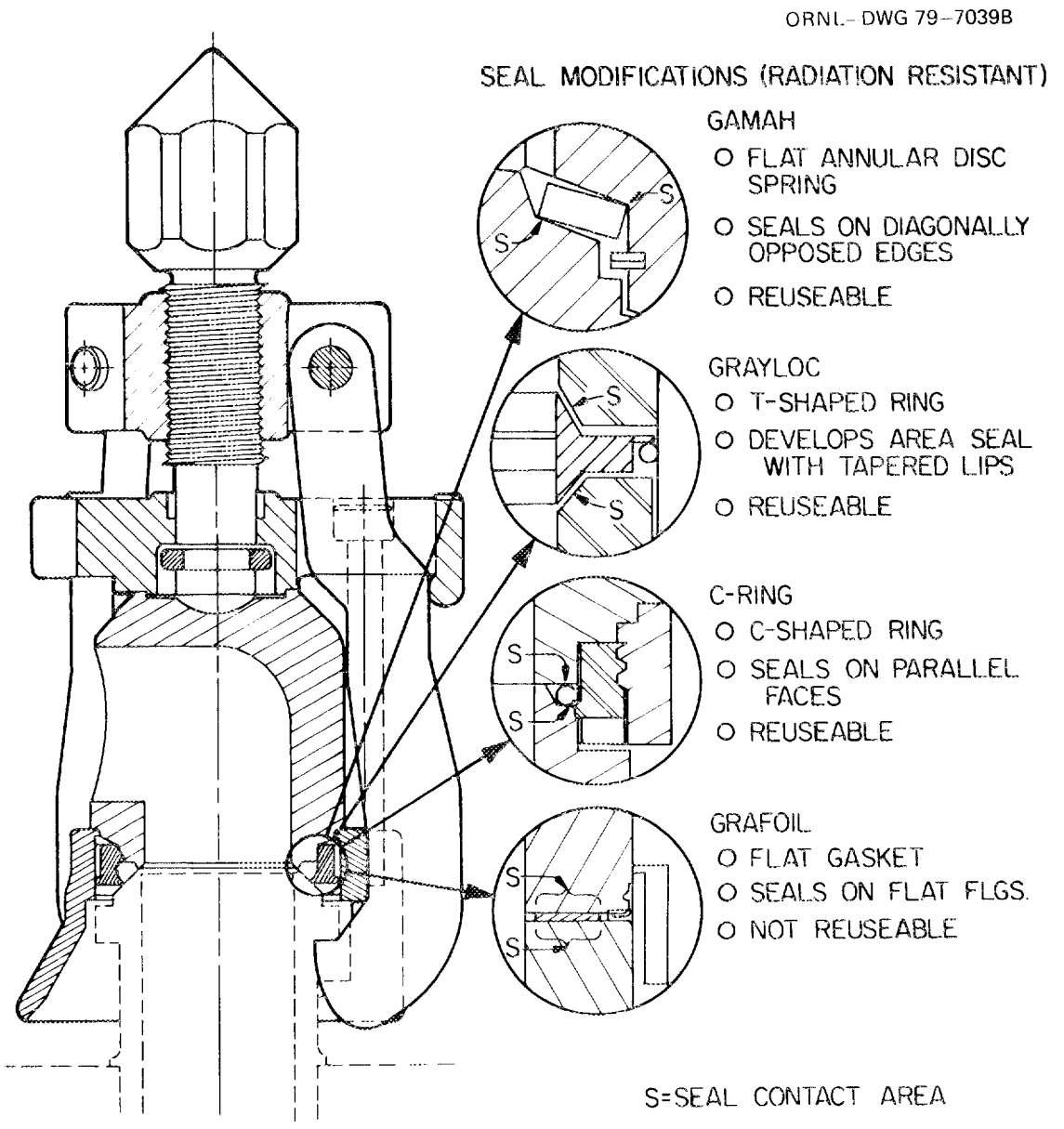

Fig. 7.1. Hanford-Purex 3-jaw connector.

excessive wear debris in the seal area. Typical leak rates for these various seals in the Hanford-Purex connector are given in Table 7.1. If these connectors use these radiation-resistant seals, then seal holders and retainers are also required to protect the seal from damage in handling and to ensure that the seals are suitable for installation with manipulators.

Table 7.1. Hanford-Purex connector seal selection list

Seal type	Leak rate[a]	Compression force on connector hubs kN (1b-ft)
Teflon, glass reinforced	5.5×10^{-10}[b]	*b*
Gamah	0.5×10^{-10}	0.44 to 22 (99 to 4970)
Grayloc	$>1 \times 10^{-7}$[c]	below 0.67 (below 150)
	0.3×10^{-10}	0.89 to 31 (199 to 6960)
"O" ring		
stainless	$>1 \times 10^{-7}$[c]	*b*
gold-plated	1×10^{-9}	*b*
Grafoil[d]	$>1 \times 10^{-7}$[c]	0.44 to 22 (99 to 4970)

[a]Leak rate using bagging technique to provide helium atmosphere on exterior of connector.

[b]Tested with connector 3-jaw clamp torqued to 203 N·m (150 ft-lb).

[c]1×10^{-7} L/s is the maximum readable leak rate for the leak detector used.

[d]The Grafoil seal is permeable to helium so representative leak rates cannot be obtained.

7.1.2 TRU Connectors

An all metal, remotely operable, in-line connector has been developed at ORNL for smaller piping or tubing. A drawing of one of these connectors is shown in Fig. 7.2. This connector is available in a variety of tubing and piping sizes from 6 to 12 mm (1/4 to 1-1/2 in.) outside diameter. The connector uses a single bolt to operate a swing clamp to force conical male and female ferrules into mating positions. The ferrules are tapered and are rolled onto the connecting tubing or piping. Typically, the female ferrule has a 20° conical taper, and the male ferrule has an 18° conical taper. The mating surfaces are polished and burnished to a 4-10 rms finish. These connectors do not have a separate, replaceable seal and are reasonably resistant to damage during handling. They have proven to be quite reliable at line pressures normally encountered in reprocessing applications up to 700 kPa (100 psig), but they have not been used in high-pressure applications. These types of connectors can be fabricated from a variety of corrosion-resistant materials. They are not as rugged as the Hanford-Purex connectors but with the proper care are also usable with most types of maintenance systems.

7.1.3 Flanges

In general, flanges have been used for large diameter piping in reprocessing applications. However, when used to facilitate remote handling, several design modifications are desirable:

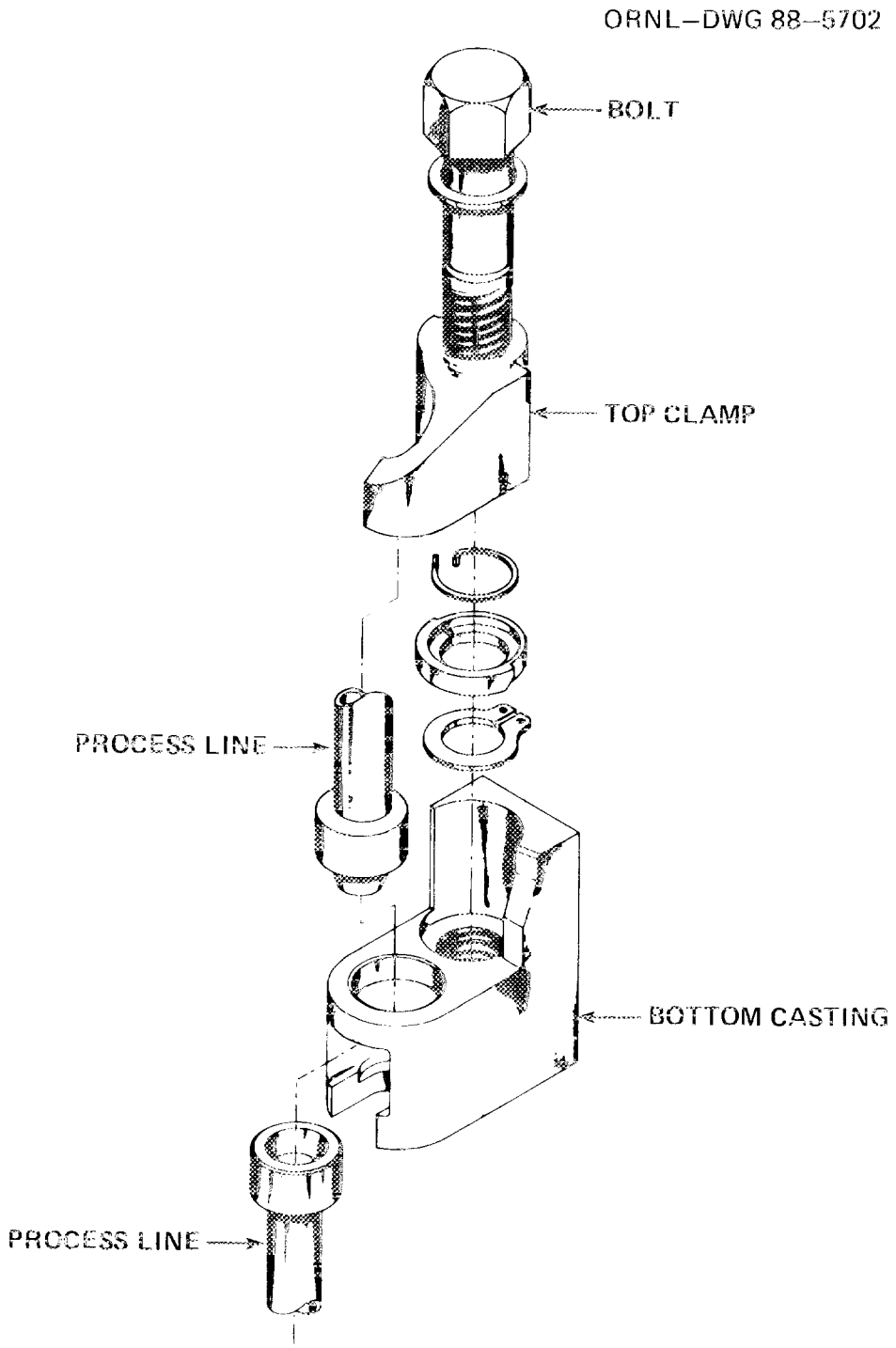

Fig. 7.2. TRU connector.

1. Bolts on the flanges should be designed with a captured feature, as described elsewhere in this document and, if possible, spring loaded. Spring loading prevents a previously loosened bolt from rethreading itself due to vibration while other bolts are being loosened.
2. Also, as described in Sect. 4, guide pins are required to assist in the remote mating of the two flange faces. Two guide pins of different lengths should be used.
3. Flanges that mate horizontally with overhead access to the bolt heads are much easier to handle remotely than vertically mated flanges. If vertically mated flanges are necessary, then a method of supporting the jumper/flanges in the proper position is required. Guide pins should not be used to support vertically mated flanges in the proper position.
4. Since flanges require seals that must be replaced periodically, a method of replacing this seal remotely without damage to the seal or sealing surfaces must be devised. The method selected depends on the size of the flange, the capabilities of the maintenance system, and the ingenuity of the equipment designer.
5. Flanges with the least number of bolts should be used. For remote operations, several types of 3-bolt flanges have been successfully used. Also, flanges which require detailed tightening sequences or precision torquing of the bolts should be avoided.

7.1.4 Tube Fittings

Many standard, commercially available tube fittings in sizes up to 1-in. outside diameter have proven to be remotely operable in cell applications using servomanipulators or through-the-wall mechanical manipulators. Fittings with double ferrules give a better seal (i.e., less torquing force required to give a good seal) than single ferrule fittings. Cross-threading does not appear to be a problem. Standard tools, modified only to give a flat gripping surface, are usable with the manipulators. The design of the jumpers should recognize that ferrule replacement is very difficult with manipulators and that ferrules should be seated on the tubing prior to bringing the jumper into the cell.

7.2 ELECTRICAL CONNECTORS

Two general types of electrical connectors are used in hot cells; those for transmission of electric power and those for signal or data transmission. Dual function connectors are rare due to the noise and interference problems. As was noted for fluid connectors, the choice of an electrical connector depends on the capabilities of the remote maintenance system available to handle the connector. For the maintenance systems installed in many of the older process cells, rugged, bulky, especially designed connectors with precision mating features must be used to prevent damage to the connector bodies and pins. For servo or mechanical manipulators, more conventional electrical connectors can be used. Recent tests at ORNL, using dexterous, force-reflecting servomanipulators demonstrated that several commercially available connectors can endure repeated handling without damage to the connector pins or bodies. These tests also identified several desirable features for electrical connectors that are applicable to both special and commercially available units:

1. Connectors that require a push-pull type motion for operation are preferred over those requiring rotary motions for mating. If rotary motion is necessary, then the number of revolutions should be minimized.

2. Angled connectors (90°) of the push-pull design promote ease of handling compared to in-line straight connectors. The pigtail on an angled connector does not conflict with the manipulator grip, and remote viewing of the handling operation is improved. Rotary locking types are not well suited to angle models. A connection to the underside of a horizontal face should be avoided but, if necessary, favors an in-line connector.
3. Connector bodies with flat, parallel surfaces are easier to grip with manipulator tongs than cylindrical bodies. Knurling on the gripping surfaces aids remote operability. A connector with a lanyard design for unplugging provides an alternative way to disconnect but introduces a potential tangling hazard, while a gripping surface is still required for rejoining.
4. Connectors with stepped inserts containing both pins and sockets in each mating half are preferred over pins only in one half and all sockets in the other. The stepped feature provides an alignment feature that can be "felt" by a force-reflecting servomanipulator and effectively minimizes pin damage.

Several design guidelines, covered in Sect. 6, also apply to electrical connectors and jumpers, which include:

1. Provide sufficient length for strain relief to minimize cable damage, however, not so much as to encounter a tangling hazard during operation/replacement.
2. Position the mounting of the electrical connectors for ease of viewing by the remote operator.
3. Avoid the use of set screws.
4. Use visible and permanent alignment marks to promote engagement of mating pieces.
5. Select materials compatible with the process cell environment (i.e., austenitic stainless steels for connector bodies, ceramic inserts, noble metal plating on pins and sockets, hermetically sealed units, etc.).

REFERENCES

1. Compiled by D. R. Doman, "Design Guides for Radioactive Materials Handling Facilities and Equipment," *Am. Nucl. Soc.*, La Grange Park, Illinois, 1988.

2. F. L. Peishel and R. W. Mouring, "Evolution of Design Concepts For Remotely Maintainable Equipment Racks," *Proc. Am. Nucl. Soc. Int. Topical Meeting Waste Management and Decontamination and Decommissioning*, September 14-18, 1986.

3. J. V. Draper et al., *Test Results: The Manipulator Operator Skill Test*, ORNL/TM-10524, Oak Ridge National Laboratory, November 1987.

4. J. V. Draper et al., *Evaluation of High-Definition Television for Remote Task Performance*, ORNL/TM-10303, Oak Ridge National Laboratory, April 1987.

5. E. C. Bradley and S. A. Meacham, *High-Water-Base Hydraulic Fluid Irradiation Experiments*, ORNL/TM-7969, Oak Ridge National Laboratory, October 1981.

APPENDIX A
CHARACTERISTICS OF RADIOACTIVITY

Naturally occurring forms of the great majority of elements are stable. However, a few elements of high atomic weight, such as uranium, exist entirely as unstable radioactive isotopes.[1,2] Some elements, such as lead, consist mainly of stable isotopes but also have some radioactive species. The unstable substances undergo spontaneous change, sometimes called radioactive disintegration or decay. This decay is associated with the emission from the atomic nucleus of an electrically charged particle, either an alpha particle (a helium nucleus) or a beta particle (an electron). In many instances, gamma radiation accompanies the particle emission. Frequently, the decay products themselves are radioactive, subsequently expelling an alpha or a beta particle. After a few disintegrations, an atomic species with a stable nucleus is finally formed.

In addition to the naturally occurring radioactive species, there are more than 800 artificial radioisotopes of the known elements. These radioisotopes have been obtained either by bombardment of stable elements with charged particles in accelerators, by capture of neutrons, or as a result of nuclear fission.

Alpha and beta particles, depending on their kinetic energy, can usually be stopped by the outer layers of the skin and are most harmful to humans if the radioactive materials are ingested with eating of food or by breathing contaminated air. These particles can cause damage to internal organs. Many elements, depending on their particular characteristics, are attracted to various organs and have a definite lifetime in the body.

Gamma rays are more penetrating than charged particles and constitute a health hazard whether internal or external to the body. Gamma radiation is reduced or attenuated most effectively by shields or materials consisting of heavy elements. The attenuation processes for high-energy gamma-ray photons are complicated and consist of several reactions. Usually, the attenuation properties of a material are proportional to the atomic number and density. Thus, uranium shields gamma rays better than lead, and lead shields better than iron. Lead is a common gamma-ray shield, but in most cases larger thicknesses of structural materials (such as steel and concrete) can be more cost-effective and still do an adequate job of shielding.[3]

Neutrons are also extremely penetrating. To reduce neutron dose, it is necessary to lower their energy or slow them down. The slower, less energetic neutrons then have a higher probability of being absorbed. A hydrogen nucleus is the most effective moderator of neutrons because a neutron can lose nearly 100% of its kinetic energy in one collision. Heavier nuclei are not as effective in slowing down neutrons. Therefore, lighter shields with high hydrogen content are the most effective. Examples of these materials are water, polyethylene, and most organic materials (compounds of carbon and hydrogen). Concrete is a good, all-around shield because it contains some water that moderates neutron energy and other intermediate weight elements that attenuate gamma rays and absorb neutrons.

Contamination is primarily a surface effect except where extremely porous surfaces are involved; therefore, decontamination of properly designed equipment or structures usually involves surface removal. Activation, on the other hand, can occur at distances inside the material, depending on the distance that neutrons can penetrate. Subjecting a material or shield to a stream of neutrons can activate the material, thus causing part of it to become radioactive. The material will then produce its own source of gamma rays. This is usually not a problem except where high-intensity neutron sources are involved, such as in nuclear reactors or experimental facilities.

REFERENCES FOR APPENDIX A

1. *General Handbook of Radiation Monitoring*, U.S. Atomic Energy Commission, 1958.

2. *Radiological Health Handbook,* U.S. Department of Health, Education, and Welfare, 1970.

3. S. Glasstone and A. Sesonske, *Nuclear Reactor Engineering,* Van Nostrand, New York, 1967.

APPENDIX B
RADIATION EFFECTS ON VARIOUS MATERIALS AND COMPONENTS

Tables B.1 and B.2 and Figs. B.1 and B.2 present data on how radiation can affect various types of materials and components. Designers are cautioned, however, that the information given here should be considered general and used for "rough" material selection. For more specific

Table B.1. Radiation level at which various substances become appreciably altered[a]

Material	Rads[b]
Transistors Glass Teflon	10^5
Lucite Water	10^6
Butyl rubber Natural rubber Organic liquids	10^7
Vespel Graphite Polyethylene	10^8
Mineral-filled phenolic polymer Hydrocarbon oils	10^9
Polystyrene Ceramics	10^{10}
Plastics (some) Carbon steels Stainless steels	10^{11}
Aluminum alloys	10^{12}

[a]Data developed from high-energy accelerators.
[b]Approximate values that will vary with types of applications.

information, the designer should consult vendor data that can be obtained by consulting the vendors listed in the Nuclear News Buyers Guide, published annually by the American Nuclear Society.*

The designer will also need to understand the meaning of radiation measurement units used in the following tables and in similar types of tables. The amount of energy absorbed in a material because of nuclear irradiation is referred to as the radiation dose and is measured in several different units. However, gamma ray is the type of radiation to be considered in the design of advanced fuel reprocessing facilities. The dose from gamma rays is measured in terms of the amount of energy absorbed per unit mass of material. The units are usually ergs per gram or rads.

One rad is equal to 100 erg/g absorbed in any material. When using rads, the material must be specified [that is, rad (tissue), rad (carbon), etc.]. Many of the doses in the tables are for carbon, and the units are rad (C).

Table B.1 shows that (1) normal glass changes color at very low levels, (2) water decomposes at about 10^6 rad, (3) polymeric materials are among the lowest resistant to radiolysis, and (4) inorganic materials are highly radiation resistant.

*Copies can be obtained from the American Nuclear Society, Inc., 555 Kensington Avenue, La Grange Park, IL 60525.

Table B.2. Radiation effects on insulators[a]

Material	Radiation exposure or threshold		Parameter measured	Effect
	rads	ergs/g		
Teflon	3.7×10^4	3.7×10^6	Elongation	Degrades by 25%
Teflon	4.4×10^6	4.4×10^8		Solid-disk-developed layer forms; outer layer more opaque than inner; some crazing and spalling
Teflon	4.0×10^9	4.0×10^{11}		Powders to finely granulated condition
Vinyl	4.0×10^9	4.0×10^{11}	Color and hardness	Severely discolors; some hardening; used as cable insulation
Polyethylene	1.0×10^8	1.0×10^{10}	Elongation	Changes 25%
Polyethylene	4.0×10^9	4.0×10^{11}	Color and hardness	Darkens; much harder and more brittle; breaks when probed with a pick
Mylar (magnetic tape)	4.0×10^9	4.0×10^{11}		Darkens slightly; magnetic coating sticks occasionally; no loss of record; strong elastic
Mylar film	1.3×10^8	1.3×10^{10}	Elongation	Degrades by 25%
Polypropylene	8.7×10^8	8.7×10^{10}	Tensile strength	Loses all elongation and tensile strength up to 10^{10} ergs/g (C); becomes flexible and softer at 10^{11} erg/g (C)
Silicone rubber	1.5×10^8	1.5×10^{10}		Becomes brittle; 25% damage level approximately 10^9 ergs/g (C)
Glass/paper	1.3×10^9	1.3×10^{11}	Insulation resistance	Decreases by factor of 10^2 to 10^3 in insulation resistance to 3.6×10^{15} neutrons/cm^2, then steady
Glass/cloth	1.3×10^9	1.3×10^{11}	Insulation resistance	Decreases by factor of 10^2 to 10^3 in insulation resistance to 3.6×10^{15} neutrons/cm^2, then steady
Mica paper	1.3×10^9	1.3×10^{11}		Decreases by factor of 10^2 to 10^3 in insulation resistance to 3.6×10^{15} neutrons/cm^2, then steady
Pyrex 707	1.3×10^9	1.3×10^{11}	Volume resistivity	Threshold

Table B.2. (continued)

Material	Radiation exposure or threshold		Parameter measured	Effect
	rads	ergs/g		
Phosphoasbestos paper	1.1×10^{9}	1.1×10^{11}	Abrasion resistance	Degrades by 35% of initial value
Mica (tape)	5.4×10^{8}	5.4×10^{10}	Mean breakdown	Degrades by 61% of initial value
Phenol formaldehyde-Bakelite (paper filler)	2.6×10^{7}	2.6×10^{9}	Tensile strength	Degrades by 25%
Polyvinyl chloride	2.2×10^{8}	2.2×10^{10}	Elongation	Degrades by 25%
Cellulose nitrate-Pyralin	5.1×10^{6}	5.1×10^{8}	Elongation	Degrades by 25%
Methyl methacrylate-Lucite	1.1×10^{7}	1.1×10^{9}	Tensile strength elongation	Degrades by 25%
Monochlorotrifluor-ethylene-Duralon	3.6×10^{9}	3.6×10^{11}	Water absorption	Degrades by 25%
Fluorothene	2.0×10^{7}	2.0×10^{9}	Elongation	Degrades by 25%
Phenol formaldehyde-Karbate	7.8×10^{7}	7.8×10^{9}	Elongation	Degrades by 25%
Polystyrene-Amphenol	6.8×10^{8}	6.8×10^{10}	Water absorption	Degrades by 25%
Polyvinyl formal-Formvar, Formex	3.0×10^{8}	3.0×10^{10}	Tensile strength	Degrades by 25%
Mycalex	5.8×10^{8}	5.8×10^{10}	Power factor	Threshold
Anodized aluminum	1.3×10^{9}	1.3×10^{11}	Insulation resistance	Decreases by factor of 10^{2} to 10^{3} after 3.6×10^{15} neutrons/cm^{2}, steady operation thereafter
Phenol formaldehyde-Micarta	6.6×10^{7}	6.6×10^{9}	Impact strength	Degrades by 50%; threshold approximately 3.5×10^{17} ergs/g (C)
Melamine formaldehyde-Melmac	1.8×10^{8}	1.8×10^{10}	Water absorption	Threshold
Nyclad	3.4×10^{7}	3.4×10^{9}	Insulation resistance	Decreases of 10^{3} to 10^{4} in insulation resistance in-pile
Nyform	3.4×10^{7}	3.4×10^{9}	Insulation resistance	Exposure rates 2.6×10^{9} neutrons·cm^{-2} s^{-1} (epicadmium); 2.5×10^{12} (nv$_{o}$) and 2.1×10^{8} ergs/g^{-1} (C) h^{-1}
Thermaleze	3.4×10^{7}	3.4×10^{9}	Insulation resistance	Considerable recovery after removal from reactor

Table B.2. (continued)

Material	Radiation exposure or threshold		Parameter measured	Effect
	rads	ergs/g		
Boron nitride				None when shielded from thermal neutrons
Refrasil				No net change
Asbestos				No net change
Dow-Corning 997 on grass cloth	3.1×10^7	3.1×10^9	Dielectric strength	35% less in dielectric strength
Neonvacite potting	5.4×10^9	5.4×10^{11}	Color and hardness	No appreciable damage
Dow-Corning S-2071	2.0×10^7	2.0×10^9	Surface study	Embrittles and cracks badly
Dow-Corning S-675	1.0×10^7	1.0×10^9	Elongation	Some reduction in elongation
Maraset 622E			Dielectric constant	Approximately 20% decrease in dielectric constant
Kish 412-M			Dielectric constant	Approximately 20% decrease in dielectric constant
Kish 420-A			Dielectric constant	Approximately 20% decrease in dielectric constant
Kish 458-G			Dielectric constant	Approximately 20% decrease in dielectric constant
Scotchcast 212			Dielectric constant	Approximately 20% decrease in dielectric constant
Scotchcast 5			Volume resistivity	Large variation in volume resistivity

*This table contains the results of a number of experimental efforts and may be used as a guide for the tentative selection of both organic and inorganic insulations. The main design problem encountered by electronic circuit designers in selecting insulation materials or insulators is determining whether commercially available items designated by trade names contain materials that resist radiation damage.

ORNL-DWG. 79-18939 R2

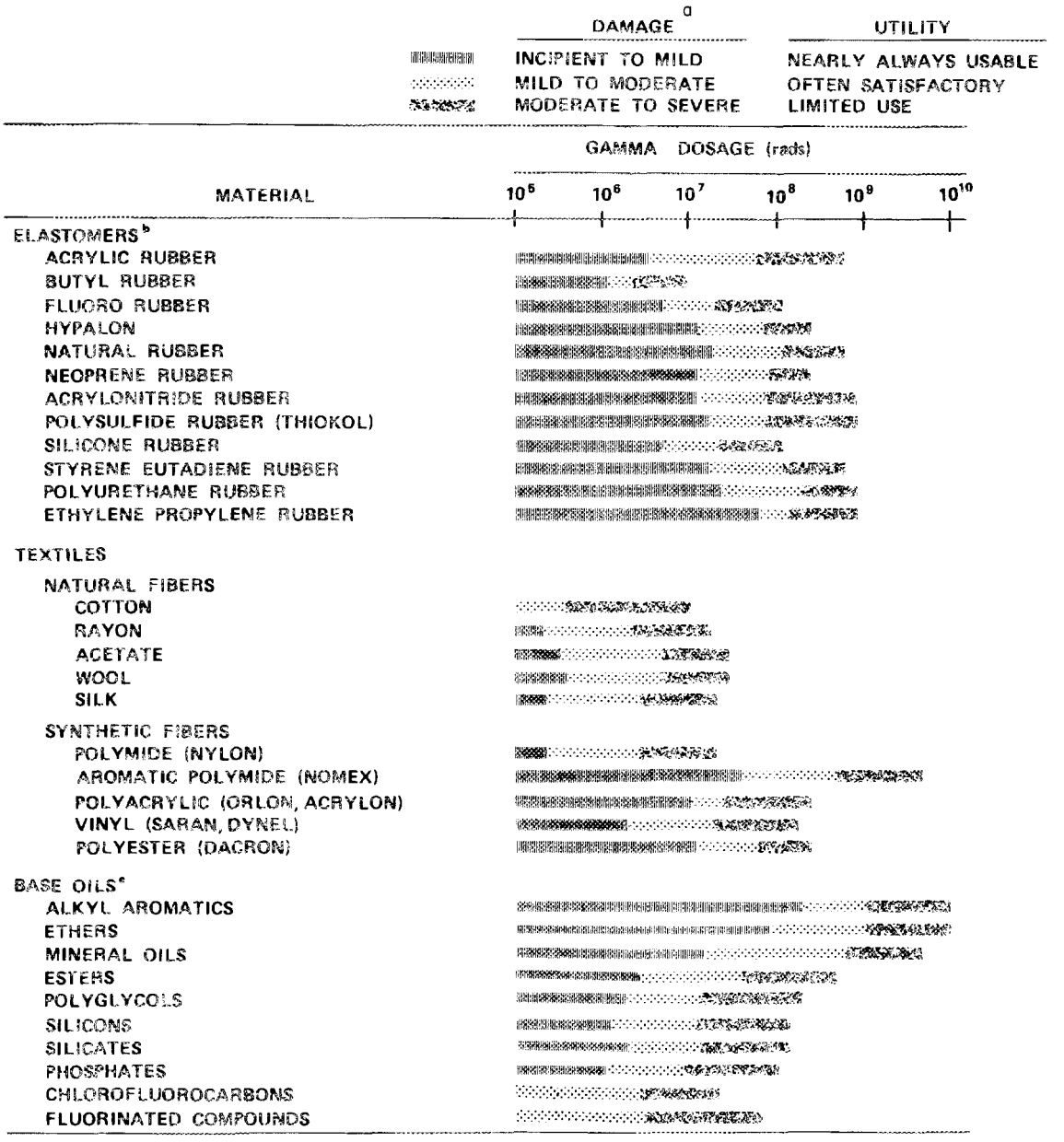

[a] ALTHOUGH RADIATION STABILITY (IN THIS TABLE) APPLIES PRIMARILY TO MECHANICAL PROPERTIES, ALL OF THE PHYSICAL PROPERTIES ARE ALMOST ALWAYS MODIFIED AT THE SAME DOSE LEVEL.

[b] ELASTOMERS ARE THE ORGANIC MATERIALS MOST SENSITIVE TO RADIATION.

[c] OXIDATION DRASTICALLY REDUCES THE LIFE OF A LUBRICANT, AND RADIATION ACCELERATES THE OXIDATION PHENOMENA.

Fig. B.1. Radiation effects on electronics, textiles, and base oils.

ORNL DWG. 79-18897R1

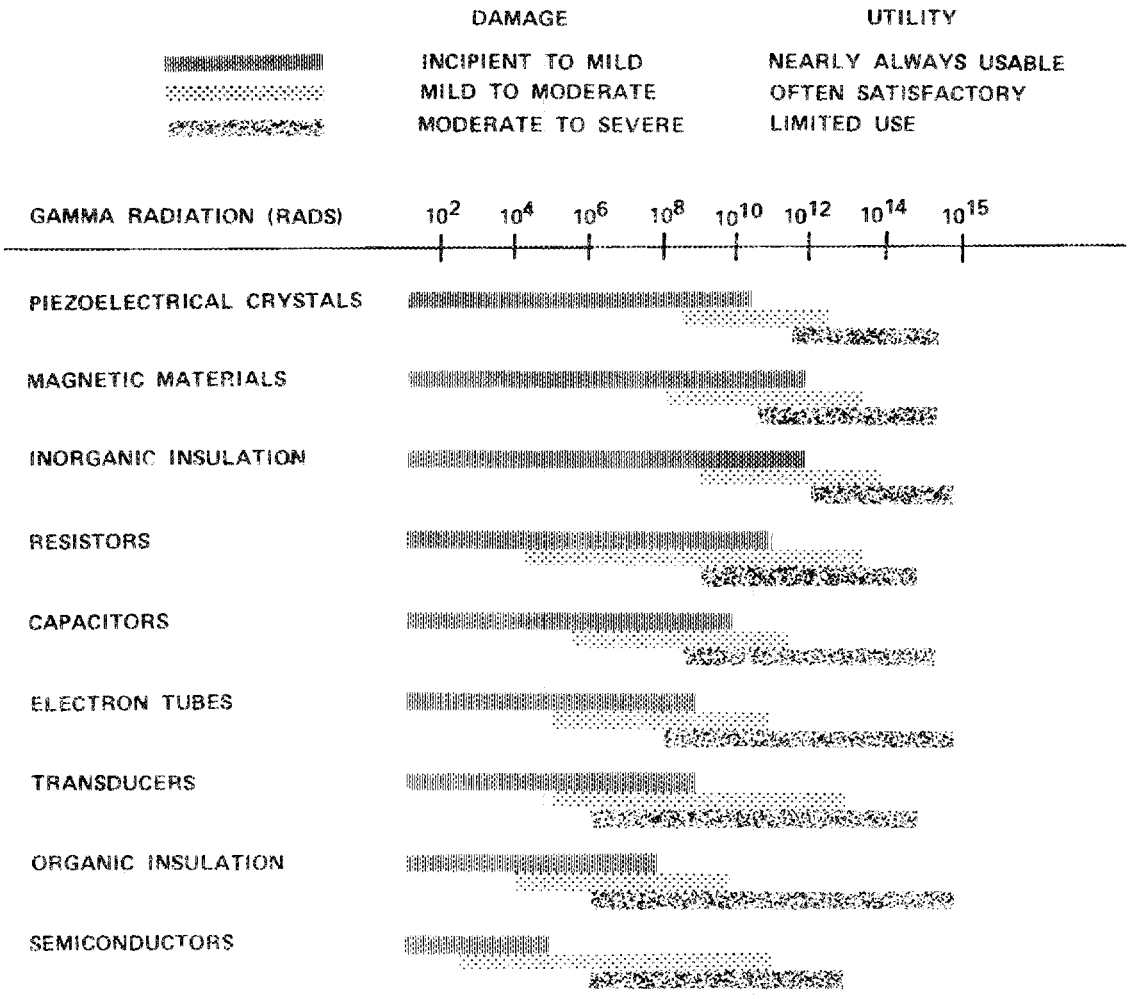

Fig. B.2. Sensitivity of electronic components to gamma radiation.

APPENDIX C

Electromechanical devices, some radiation-resistance ratings[a,b,c]

Item	Sources	Rated rad	Comments
AC Motor Class R w/service RH	Reliance Electric	 1×10^8	 for 0-600 V for >600 V
Servo motor AC DC	Inertial Motor		
Actuators	Limit torque	2×10^8	Uses reliance electric motors
Resolvers	Northern Precision Laboratories	1×10^9	Used at HETF
Limit switches	Minneapolis-Honeywell	1×10^8	
LVDT	Schoeritz	1×10^{12}	
Electrical connectors	Lemo	1×10^9	
Electrical wire cable	Kyle Technologies	6×10^{14}	Fixes and flexible
Electrical wire cable	Boston insulated wire	2×10^8	Power and instrument cable, wide selection
Optical encoders	Itek measurement systems	1×10^6	
Proximity detectors	Honeywell Capacitek	1×10^9	Depends on sale

[a]National Electric Manufacturer's Association (NEMA) Standards, MG-1, 1978.

[b]Institute of Electrical Electronic Engineers (IEEE) Standards, IEEE 323, IEEE 334, IEEE 469, 1980.

[c]American National Standards Institute (ANSI) Standards, N45.2-2, N101.4.

REFERENCES FOR APPENDIX C

1. National Electric Manufacturer's Association (NEMA) Standards, MG-1, 1978.
2. Institute of Electrical Electronic Engineers (IEEEE) Standards, IEEE 323, IEEE 334, IEEE 469, 1980.
3. American National Standards Institute (ANSI) Standards, N45-2.2, N101.4.

APPENDIX D
DESIGN CHECKLISTS

D.1 Module Design Checklist

The following checklist is included to aid the designer in reviewing a preliminary equipment design for compliance with remote-maintenance design guidelines.

1. The modules must incorporate specific design features that limit the need for specially designed, in-cell, remote-maintenance handling equipment peculiar to one piece of equipment.
2. The modules should be designed to be removed, preferably vertically, from their operational location. Compound motions (combinations of vertical and horizontal) must be avoided.
3. Bolted remote interface separation joints should be designed so that close tolerances are not required.
4. Maximum removal torque must be considered as a design requirement to ensure that the remaining in-cell part of the fastener interface is stronger.
5. Fasteners to be operated in the process cells must be captive.
6. The use of counterweights to balance equipment during lifting is to be avoided; however, if necessary, the counterweights must be an integral part of the equipment designs and not added as part of the remote-maintenance operation.
7. The designs must provide for unobstructed viewing of remotely separable interfaces so that any tools or equipment needed to perform the in-cell maintenance functions can be engaged, disengaged, or positioned in full view.
8. The designs will be evaluated from the standpoint of system downtime during maintenance operations. The minimum downtime should usually take precedence over the cost of the design feature(s). The time period for the evaluation of downtime spans starts when the malfunction is detected and extends through all operations necessary to restart the system.
9. All designs must consider possible decontamination features. The cost of decontamination and disposal of an item as radioactive waste is also an important design factor.
10. Modules defined as remotely repairable should have design features that permit remote disassembly, repair, reassembly, and checkout. Special tooling may be required; however, the equipment design should be directed to minimize the need for special tooling.
11. Modules defined as repairable by hands-on contact after decontamination must have the necessary features to allow all preceding remote maintenance steps to be accomplished remotely; that is, lifting, handling, decontamination, and disassembly from parent parts.
12. Where applicable, diagnostic equipment must be provided to aid in the determination of equipment malfunctions. Determination of the cause of the malfunction is not a primary objective of diagnostic equipment; therefore, a "go," "no-go" approach to diagnostic equipment and/or instruments is preferred.

D.2 Design Priorities Checklist for Large Remotely Operated Process Cells

The design of any equipment to be remotely operated and maintained in radioactive areas necessarily involves trade-offs of one design feature for another. The following design priorities are to be considered:

1. The item must fulfill functional requirements.
2. The item must be maintainable with the remote maintenance equipment available.
3. The item should be as reliable as possible.
4. The item should be maintainable in as short a time as possible.
5. The cost of the item should be considered in terms of lifetime costs; that is, its original cost plus the cost of maintenance and the loss attributed to downtime (when its failure frequency is taken into account).

Reliability and maintainability go hand in hand. There is a trade-off or an assessment that must be made by the designer; that is, whether to use more costly components that fail less frequently or to use less costly components that must be replaced more frequently.

D.3 Design Checklist for Equipment Installation and Removal

1. Have the reaction loads and forces generated by the equipment items (particularly at the mounting location) been considered?
2. Can the equipment item be mounted without bolts (i.e., guide pins and gravity) and satisfy stress and maintenance requirements?
3. Does the equipment item require frequent removal or is it semipermanent (i.e., if the item has a high removal frequency, pins or nonbolted clamping devices should be used instead of bolts)?
4. Is there sufficient clearance to and around fasteners and lifting bails to permit the impact wrenches and other maintenance equipment to reach the fastener or lifting bail?
5. Have the utility requirements (electric, pneumatic, instrumentation) and the connecting locations (i.e., in relation to utility stations) been considered?
6. Are the fastener-torque requirements within the rated load capacity of the maintenance equipment item?
7. Can an adapter plate or similar device be used to permit the use of commercial equipment?
8. Have allowable clearances caused by interfacing and adjacent equipment maintenance movement been considered?

The following guidelines should be considered in establishing design requirements:

1. Each equipment item should use a maximum of two guides for close alignment and as many as necessary for gross alignment. Guides should be of different lengths, engaging sequentially one at a time.
2. Installation and disassembly forces and loads must be predetermined to prevent damage to the component and maintenance equipment. Specifically, electromechanical manipulators should not routinely be loaded beyond 50% of their rated capacity, whereas cranes should not be loaded in excess of 100% of their rated capacity.
3. The use of external fastening devices or guides at semipermanent locations should be minimized. Where this is not feasible, these components must either be protected, designed to withstand damage caused by probable accident situations, or designed to be replaced with a minimum of cell downtime.

4. Fasteners used on or with mounting equipment should be designed to remain with the equipment when loosened (i.e., captive).
5. Fasteners must be self-aligning, with lead and clearances; threads, when used, must be selected to reduce the possibility of cross-threading and galling.
6. Blind holes should be avoided; however, when necessary, the holes must have provisions for removing or draining of sediments and liquids.
7. Adequate materials should be selected for the intended purpose (i.e., corrosion resistance, decontamination, radiation resistance, shielding).

ORNL/TM-10864
Dist. Category UC-526

INTERNAL DISTRIBUTION

1. J. F. Alexander
2. D. E. Benker
3. J. E. Bigelow
4. J. F. Birdwell
5. E. C. Bradley
6-7. W. D. Burch
8-12. T. W. Burgess
13. W. A. Camp
14. R. H. Chapman
15. J. E. Chesser
16. E. Collins
17-18. F. C. Davis
19-23. J. H. Evans
24. M. J. Feldman
25. R. W. Glass
26. W. S. Groenier
27. M. J. Haire
28. W. R. Hamel
29. J. H. Hannah
30. J. E. Hardy
31-40. W. F. Johnson
41. R. T. Jubin
42. M. V. Keigan
43. R. K. Kibbe
44. L. J. King
45. L. N. Klatt
46. E. H. Krieg, Jr.
47. C. T. Kring
48. L. D. Ladd
49. B. E. Lewis
50. D. Macdonald
51. S. A. Meacham
52. C. F. Metz
53. D. R. Moser
54. M. W. Noakes
55. R. E. Norman
56. F. L. Peishel
57. B. E. Prince
58-107. S. L. Schrock
108. S. P. Singh
109. B. H. Singletary
110-115. G. E. Smith
116. B. B. Spencer
117-118. J. G. Stradley
119. D. B. Trauger
120. R. W. Tucker, Jr.
121. K. U. Vandergriff
122. V. C. A. Vaughen
123. J. W. Wachter
124. B. S. Weil
125. C. R. Weisbin
126. H. R. Yook
127-128. Laboratory Records
129. Laboratory Records ORNL-RC
130-131. FRD Publications Office
132. ORNL Patent Section

EXTERNAL DISTRIBUTION

133. D. E. Bailey, Director, Division of Fuels and Reprocessing, Office of Facilities, Fuel Cycle, and Test Programs, NE-471, U.S. Department of Energy, Washington, DC 20545.
134. F. P. Baranowski, 657 Fairfax Way, Williamsburg, VA 23185.
135. J. E. Dunn, ORNL/CFRP On-Site Representative, USDOE/PNC Collaboration Program, Reprocessing Technology Development Division, Tokai Works, Power Reactor and Nuclear Fuel Development Corporation, Tokai-Mura, Ibaraki-ken, Japan, Post No. 319-11.

136. M. J. Ohanian, Associate Dean for Research, College of Engineering, 300 Weil Hall, University of Florida, Gainesville, FL 32611.
137. M. J. Rohr, Program Manager, Consolidated Fuel Reprocessing Program, Energy Programs Division, Energy Technology Branch, Oak Ridge Operations Office, U.S. Department of Energy, P.O. Box 2001, Oak Ridge, TN 37831.
138. J. L. Scott, USDOE Representative, Power Reactor and Nuclear Fuel Development Corporation, Sankaido Building, 9-13, 1-Chome, Akasaka, Minato-ku, Tokyo 107 Japan.
139. Office of Assistant Manager for Energy Research and Development, DOE-ORO, Oak Ridge, TN 37831.

140-211. Given distribution as shown in TIC-4500 under UC-526, Consolidated Fuel Reprocessing Category.