ORNL
MASTER COPY

APR 1 2 1988

ORNL-6462

ornl

OAK RIDGE
NATIONAL
LABORATORY

MARTIN MARIETTA

SCINFUL: A Monte Carlo Based Computer Program to Determine a Scintillator Full Energy Response to Neutron Detection for E_n Between 0.1 and 80 MeV: User's Manual and FORTRAN Program Listing

J. K. Dickens

OPERATED BY
MARTIN MARIETTA ENERGY SYSTEMS, INC.
FOR THE UNITED STATES
DEPARTMENT OF ENERGY

Printed in the United States of America. Available from
National Technical Information Service
U.S. Department of Commerce
5285 Port Royal Road, Springfield, Virginia 22161
NTIS price codes—Printed Copy: A11; Microfiche A01

This report was prepared as an account of work sponsored by an agency of the United States Government. Neither the United States Government nor any agency thereof, nor any of their employees, makes any warranty, express or implied, or assumes any legal liability or responsibility for the accuracy, completeness, or usefulness of any information, apparatus, product, or process disclosed, or represents that its use would not infringe privately owned rights. Reference herein to any specific commercial product, process, or service by trade name, trademark, manufacturer, or otherwise, does not necessarily constitute or imply its endorsement, recommendation, or favoring by the United States Government or any agency thereof. The views and opinions of authors expressed herein do not necessarily state or reflect those of the United States Government or any agency thereof.

ORNL–6462

Engineering Physics and Mathematics Division

SCINFUL: A Monte Carlo Based Computer Program to Determine a Scintillator Full Energy Response to Neutron Detection for E_n Between 0.1 and 80 MeV: User's Manual and FORTRAN Program Listing

J. K. Dickens

DATE PUBLISHED — March 1988

Prepared for the
Office of Energy Research
Nuclear Physics

NOTICE: This document contains information of a preliminary nature. It is subject to revision or correction and therefore does not represent a final report.

Prepared by the
OAK RIDGE NATIONAL LABORATORY
Oak Ridge, Tennessee 37831
operated by
MARTIN MARIETTA ENERGY SYSTEMS, INC.
for the
U.S. DEPARTMENT OF ENERGY
under contract DE–AC05–84OR21400

CONTENTS

ABSTRACT v
1. INTRODUCTION 1
2. CALCULATIONAL DETAILS 2
3. INPUT DATA 5
4. OUTPUT DATA 8
5. POTENTIAL EXTENSIONS 22
6. LISTING OF THE COMPLETE SCINFUL PROGRAM 24
7. THE SUBSIDIARY PROGRAM SCINSPEC 209
REFERENCES 217

ABSTRACT

This document provides a complete listing of the FORTRAN program SCINFUL, a program designed to provide a calculated full response anticipated for either an NE-213 (liquid) scintillator or an NE-110 (solid) scintillator. The incident design neutron energy range is 0.1 to 80 MeV. Preparation of input to the program is discussed as are important features of the output. Also included is a FORTRAN listing of a subsidiary program applicable to the output of SCINFUL. This user-interactive program is named SCINSPEC from which the output of SCINFUL may be reformatted into a standard spectrum form involving either equal light-unit or equal proton-energy intervals. Examples of input to this program and corresponding output are given.

1. INTRODUCTION

The purpose of the computer program SCINFUL is to compute by Monte Carlo methods the complete reponse of a scintillator detector to incident neutrons. There are a number of existing computer programs[1−12] designed to predict, if not complete responses, at least the efficiencies of such detectors for a few selected thresholds. A well used, and copied, program is the 20-year-old ORNL program O5S[1]. As originally written, O5S was an adaptation of an earlier general-purpose neutron-transport code O5R;[13] indeed, O5S incorporated many of the features of the parent code. O5S was tested for incident neutron energies up to 20 MeV,[2] and was used primarily for the liquid scintillator NE-213 (made by Nuclear Enterprises, Ltd.). Although O5S was not particularly designed for $E_n > 20$ MeV, it seemed reasonable to expect that it could be extended to higher energies with modifications to the existing computer program. However, demanding the program to provide adequate computed responses even for E_n up to 40 MeV (the original goal) required substantial new additions as well as substantial revisions (for example, substituting relativistic for non-relativisitic transformations). As a consequence, although a few of the programming techniques of the "parent" O5S were kept, the present program is sufficiently new to warrant a new name: SCINFUL, for <u>scin</u>tillator <u>full</u> response to neutron detection.

2. CALCULATIONAL DETAILS

SCINFUL is written for a scintillator of NE-213 (a liquid) or NE-110 (a solid) in the shape of a right circular cylinder; the cartesian coordinate axes, as shown in Fig. 1, have their origin in the center of the front face of the detector. The physics aspects and program construction of SCINFUL are documented in a separate report (Part II). Comparisons with measurements and other computer-code predictions for E_n up to 90 MeV are also exhibited and discussed in Part II.

There are several features in SCINFUL not found in O5S which should be mentioned before discussing preparation of input to the program. In the first place, impinging neutrons are assumed to emanate from a point and not as a parallel beam. In addition, the point source may be placed at any location with respect to the detector, even inside it (a "diagnostic" message is typed out for this situation.). However, a source placed behind the detector is moved to an equivalent position in front of the detector, since no provisions are made in the program to compute effects of any attached light pipe, photomultiplier tube or other peripheral material.

A second feature is the ability to define a "collimator" for the front face of the detector, i.e., a centered circular area smaller than the circular area of the front face. This infinitely-absorbing, zero-thickness "collimator" may also be used to mask the curved surface of the detector from a source placed at an angle with respect to the detector axis such that emanating neutrons illuminate both the front face and the curved surface.

A third important feature is the ability to choose from a neutron distribution as well as to being able to specify a monoenergetic source. The two distributions available are (a) a uniform distribution and (b) a Maxwellian distribution.

A fourth important feature, for an NE-213 calculation, is the capability of performing the computational equivalent of electronic pulse-shape-discrimination (PSD). In this mode if any type of event in the detector (such as inelastic scattering from ^{12}C) is followed by photon production, and if the program determines that this photon subsequently interacts in the detector, then the complete history for that neutron is discarded. Thus, each implementation of this software PSD reduces by one the total number of recorded events from the total number expected by the (input) number of histories desired.

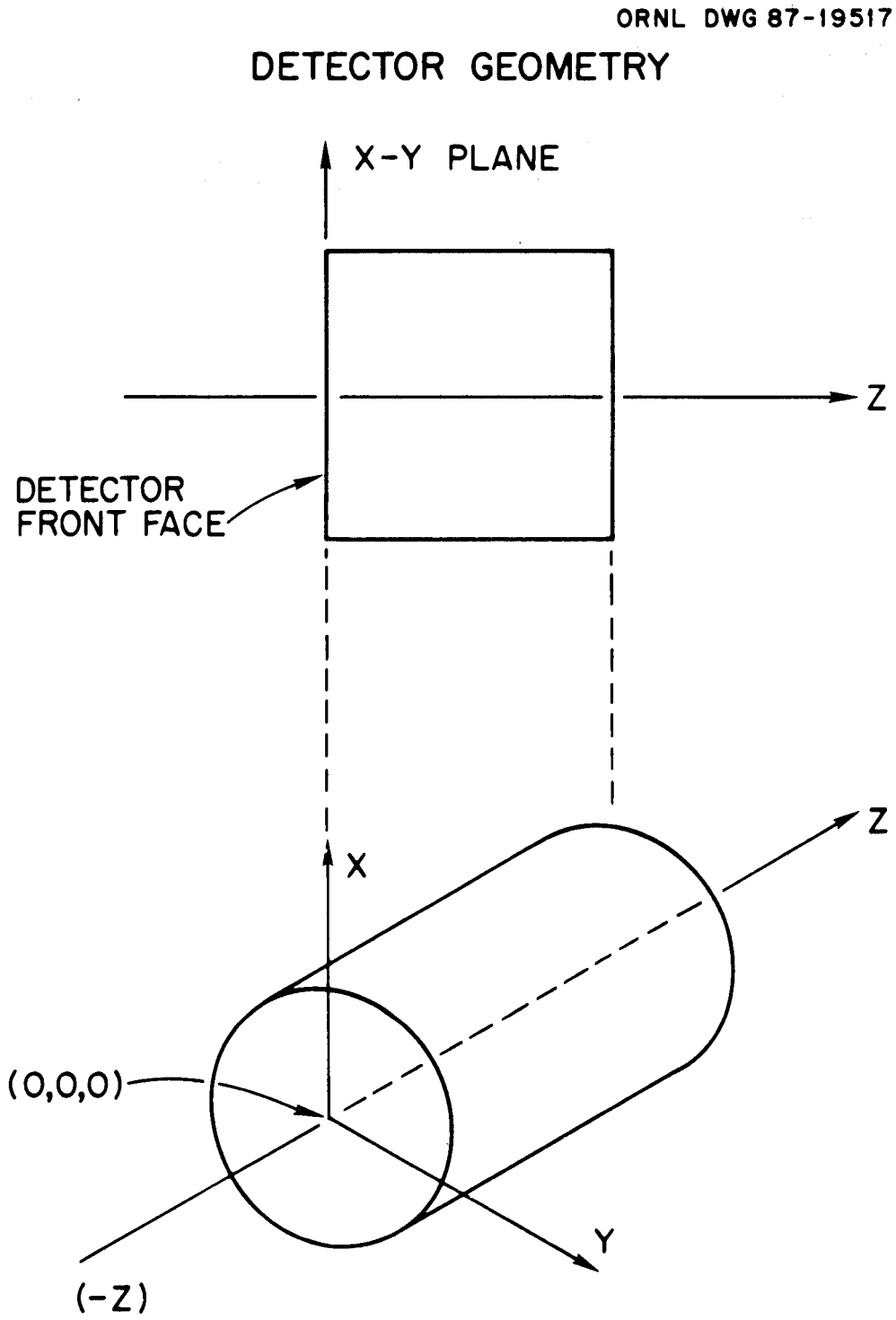

Fig. 1. Geometry of cylindrical scintillator exhibiting the specific delineation of the cartesian coordinate axes. The origin is defined as the center of the front face of the detector; the photomultiplier tube or intervening light pipe is attached to the back face of the cylinder, at $z = +H$eight.

A fifth feature of the present program is the first-order computation of the attenuation of the light by the detector before the light reaches the photocathode. It is evident from study of the literature that this contribution to the response is not well understood; one should probably not use this capability built into SCINFUL without careful study of the specific detector and source configuration being modeled by the calculation.

3. INPUT DATA

The input parameters are prepared in a file labelled INPUT.DATA in a semi-free-form format recognized by the VAX/VMS (Digital Equipment Corp.) FORTRAN compiler. Field lengths are not needed, although type specifications are required; numerical values are separated by commas. A sample data set follows:

```
 Uwamino et al., Nucl. Instrum. Meth. 204 (1982) 179; En = 62 MeV
48000,-213.,0.0
62.0,0.0,0.0,0.01
-3
0.0,0.0,-1000.0
3.8,7.6,3.8
0.015
```

Interpretation of the data values in the 7 lines of input are as follows (see Subroutine INPUT of the program):

```
CARD READ NO. 1   ---  a title, up to 80 characters
      Read (20,100,End=99) (Title(I),I=1,20)
  100 Format(20A4)
CARD READ NO. 2   --- (1)  Nhist: No. of histories (an integer .LE. 100000);
c    (2) Scntyp: Scintillator type - either 110. or 213. (or -213.; see
c                comment below) for NE-110 or NE-213, respectively;
c    (3) Grho:   Light attenuation factor (in cm**-1) for light attenuation
c                by the scintillator.
      Read (20,102,End=99) Nhist,Scntyp,Grho
  102 Format(I,2F)
      IF (Scntyp .EQ. 213.) goto 3
      IF (Scntyp .EQ. 110.) goto 92
c       If program counter gets to here, input SCNTYP was -213., indicating
c         a desire to use "pulse-shape-discrimination" computer methods to
c         exclude events which result in gamma rays being detected.
```

```
CARD READ NO. 3   ---  Neutron source energy information
    4 Read (20,104,End=99) Esourc,E1,T,Ecutoff
  104 Format(4F)
c       If T=0  Esourc = Energy of Monoenergetic Neutron Source
c       If T<0  Choose from uniform distribution of neutron energies
c                between E1 and Esourc
c       If T>0  T is a Maxwellian temperature used for choosing neutron
c               energies between E1 and Esourc from a Maxwellian distribution
c       Ecutoff = Low-energy bound for the colliding neutron in the detector
c               (Neutron energies in MeV...)
CARD READ NO. 4   ---  IRX: Starting random number (if < 0 program chooses one)
      Read (20,109) Irx
  109 Format(I)
CARD READ NO. 5   ---   source position (in cm) with respect to the center
c        of the front face of the detector
      Read (20,114) Xsourc,Ysourc,Zsourc
  114 Format(3F)
CARD READ NO. 6   ---   detector geometry information, in cm
      Read (20,114) Radius, Height, Rcolim
c        Radius:  Detector radius
c        Height:  Detector height (length)
c        Rcolim:  Front collimator radius
CARD READ NO. 7   --- Light-unit binning variable (if = 0 program chooses)
      Read (20,113) Wbox
  113 Format(F)
      If (Wbox .GT. 0.0) goto 15
c       If variable -WBOX- .LE. 0.0 then compute a value so as
c          to use most of the 475 light-unit bins.
```

The interpretation of the sample input file is as follows: the case is a calculation of 62-MeV neutrons incident normal to the face of a 7.6-cm-diam by 7.6-cm-long NE-213 detector.[12] To represent a "parallel beam" of neutrons for the present case, the 62-MeV neutron source is positioned 10 m on the z-axis, and so the input $z = -1000$, while input $x = y = 0$. The minus sign with the 213 entry (second

card) indicates requesting the software "PSD" to exclude events which resulted in gamma-ray emission and subsequent detection. The source is monoenergetic with a low-energy cutoff of 10 keV. No attenuation of the light by the scintillator is requested.

The program was requested to determine an initial random number by the -3 (any negative number could have been used) entry for the variable IRX, card read no. 4. Finally, based on an earlier computation, a value of 0.015 was chosen for the pulse-height light-unit variable WBOX. Often, a value of 0.0 is entered for WBOX to request the program to compute an optimal value for this variable.

4. OUTPUT DATA

Output is provided in two files, one labelled NEW.LPT and the other NEW.PCH. In addition, there are a few lines of information typed to the monitor/printer as follows:

```
$ run main
 THE TIME IS 11:08:06
              The First Random Number is  0.6181194E+00
 Finished first part.  Domega =   4.5364E-05 sr.
 THE TIME IS 11:11:49
 THE TIME IS 12:04:13
Completed files NEW.LPT and NEW.PCH
$
```

The interpretation of this printer/monitor information is as follows: the "$" character is a prompt from the VAX monitor; the command "run main" is entered. ("MAIN" is the name assigned to the primary routine of the complete SCINFUL program.) The next line, and the first output line, is the time-of-day from the VAX monitor. Since the INPUT for the starting random number, Card No. 4, was -3, the program chooses an initial random number which is typed out as shown. The program then commences the first part of the calculation which is to impinge the surface of the detector with a sufficient number of incident neutrons to register NHIST (from Card No. 2) initial interactions in the detector. Output to the printer/monitor signals the completion of this task, gives the computed solid angle (Domega) subtended by the detector as observed from the source position, and gives the time of day. The program commences the second task which is to follow each of the NHIST events to a conclusion and to determine and record light-unit amounts for each collision which are also summed for each event. At the end of this task, which required about 14 min of CPU time on the ORELA VAX 11/785 computer, all information is output to the two disk files, and upon completion of this output phase the time is once again output to the printer/monitor along with the final message. Control then returns to the VAX monitor.

The first line of the LPT file (which starts on page 11) is the date of the calculation (the Write command is in the Main routine). The next 12 lines are

documentation of the input parameters (the Write commands are in the subroutine INPUT). Then follows the complete computation before any further output other than to the monitor/printer. The majority of the Write commands are in the subroutine BANKR (similar to O5S); much more information is available in the SCINFUL output than was available in the O5S output, however. Referring to the LPT output listing, the next lines of information are interpreted as follows:

No. of Neutrons used=	This is the number of neutrons from the source which intercepted some surface of the detector.
Zero-bias efficiency=	Number of neutrons detected divided by the number of neutrons used.
Subtended Solid angle=	Monte-Carlo determined solid angle of the exposed surface of the detector with respect to the source position.
(Optional) NE-213 PSD On;...	Self explanatory.

Next follows a listing of counts of types of events grouped by major type. For the NUMBER OF ELASTIC HYDROGEN COLLISIONS there is an added output (to the right of the numerical value) of the distribution of these events along the Z-axis (length) of the detector. One may quickly observe that major types of events are given in all capital letters, whereas the subsidiary types are indented and in lower case. There is some overlapping of subsidiary types; the separate listings (and tabulations) are given under different major types according to where in the SCINFUL program the particular subsidiary type is computed.

Then follows information on the number of PHOTON interactions, number of escaped PROTONS and escaped DEUTERONS, and the number of NEUTRONS which underwent a sufficient number of collisions to reduce their energies below the Ecutoff input parameter.

The last information on the first page of NEW.LPT relates to keeping track of numbers of neutron collisions in the detector as determined by the calculation, a useful feature retained from the O5S program.

The next eight pages of NEW.LPT present a complete event tabulation similar to O5S, but having more information than given by O5S. The first two columns give

the LIGHT RANGE for the rows of the table; the bin widths increase with light range so as to remain approximately a constant times light. The TOTAL column tabulates the total light summed for all neutron histories, and IS NOT the sum of the row of data in the next 12 columns. The next 12 columns give the light determined for individual scatterings for each of the 12 major types of events in the detector. Under the column headed by "n,n3a", for example, will be the total light generated for this type of event for each pass through the subroutine NN3ALF, that is (for most events) the sum of light recorded for the three alphas. The final three columns tabulate charged- particle energies (up to 100 MeV) equivalent to the average light given by the bins in the first two columns under LIGHT RANGE.

Information in this complete event tabulation is also output into the file NEW.PCH suitable as input for further analyses of the computed results, for example, by the program SCINSPEC discussed later.

At the end of the complete event tabulation is a row of summed data for each column. Note that in the present example the sum for the TOTALS column is less than the number of histories by an amount determined from implementing the "PSD" portion of the program.

Finally, on pages 20 and 21, there is a table of angle-integrated charged-particle spectra calculated for events of the type:

$$^{12}C + n \rightarrow \text{ charged particle} + \ldots$$

The results in this table represent what might be expected from a measurement following neutron interactions with a thin sample of carbon, similar to the experiment of Subramanian et al.[14]

(Text continues on page 22)

```
                                        Today is  2/ 2/1988
  Uwamino et al., Nucl. Instrum. Meth. 204 (1982) 179; En = 62 MeV
Monoenergetic Source Energy is   62.0000 MeV
Scintillator Type NE-213              Light-attenuation factor is 0.0000/cm
Low-energy Cut-off =    0.0100 MeV
Initial Random Seed =  1110080007 (Base 10)
Neutron Source is at
     X=    0.000 cm,       Y=    0.000 cm,       Z=-1000.000 cm
        Where the front face of the detector is in the X-Y plane.
Geometry Specifications
     Radius =  3.80000 cm       Height =  7.60000 cm
     Collimator radius =  3.80000 cm
L.U. width parameter -WBOX- =   1.50000E-02

No. of Neutrons used=     199990
Zero-bias efficiency=      0.240012
Subtended Solid angle=  4.53641E-05 sr

 Ne-213 PSD On; No. of photon rejects=        736

NEUTRONS HAVING AT LEAST 1 COLLISION=       48000
NEUTRONS HAVING A HYDROGEN COLLISION=       10225
NUMBER OF ELASTIC HYDROGEN COLLISIONS=      13138
NEUTRONS HAVING ELASTIC C COLLISIONS=       30253
NUMBER OF ELASTIC CARBON COLLISIONS=        33131
NUMBER OF INELASTIC CARBON COLLISIONS=       1301
NEUTRONS HAVING AN (N,ALPHA) COLLISION=       239
NEUTRONS HAVING AN (N,N-3ALPHA) COLLISION=   2064
  Neutrons having (N,Alpha P) Reactions=       16
  Neutrons having (N,Alpha PN) Reactions=      25
  Neutrons having (N,Alpha P2N) Reactions=     19
  Neutrons having (N,2Alpha PNT) Reactions=     5
  Neutrons having (N,2Alpha P2ND) Reactions=   37
NEUTRONS HAVING AN (N,P 12-B) COLLISION=      463
  Neutrons having (N,P ALPHA) Reactions=       66
NEUTRONS HAVING AN (N,PN 11-B) COLLISION=    1685
  Neutrons having (N,PN ALPHA) Reactions=     226
  Neutrons having an (N,P2N) Reaction=        827
  Neutrons having (N,P2N ALPHA) Reactions=     79
  Neutrons with (N,PD2N 2ALPHA) Reactions=     63
  Neutrons with (N,PNT 2ALPHA) Reactions=       4
  Neutrons having (N,2P 11-Be) Reactions=      37
  Neutrons having (N,2PN 10-Be) Reactions=    392
  Neutrons having (N,2P2N 9-Be) Reactions=    209

NEUTRONS HAVING AN (N,D 11-B) COLLISION=     1253
  Neutrons having (N,D Alpha) Reactions=       30
  Neutrons having an (N,DN 10-B) Reaction=    409
  Neutrons having (N,DNP 9-Be) Reactions=     243
  Neutrons having (N,DND 2ALPHA) Reactions=   189
  Neutrons having (N,DN ALPHA) Reactions=     107
NEUTRONS HAVING AN (N,2N) COLLISION=         1063
  Neutrons Having an (N,2NP) Collision=       785

NO. OF COLLISIONS PER COLLIDING NEUTRON=   1.2641
COLLISION DISTRIBUTION:
      0      1      2      3      4      5      6      7      8      9     10     11     12     13     14     15     16     17     18     19    >19
 151990  39992   5758   1221    444    237    150     79     57     23     15     14      5      4      1      0      0      0      0      0      0
```

```
 Hydrogen-Collision Depth Distribution in Steps of 0.1*   7.6 cm
Front Face      -->                  -->                 -->   P.M. Tube
    1251   1334   1394   1366   1367   1392   1302   1283   1257   1192
```

```
NEUTRONS HAVING AN (N,T 10-B) COLLISION=          99
  Neutrons Having an (N,TP 9-Be) Reaction=        65
  Neutrons Having an (N,TD 2ALPHA) Reaction=     753
  Neutrons Having an (N,T ALPHA 6-Li) Reaction=   53
  Neutrons Having an (N,TPN 2ALPHA) Reaction=    711
  Neutrons having an (N,TPD 7-Li) Reaction=       22

NEUTRONS HAVING AN (N,3-He 10-Be) REACTION=       43
  Neutrons having (N,3-He N 9-Be) Reactions=      68
  Neutrons having (N,3-He 2N 2Alpha) Reactions=  726
  Neutrons having (N,3-He NP 8-Li) Reactions=     30
  Neutrons having (N,3-He 2NP 7-Li) Reactions=     3
  Neutrons having (N,3-He 2NPT Alpha) Reactions=   0

Number of PHOTON Interactions=          736
Number of Escaped PROTONS =            2511
Number of Escaped DEUTERONS =           248
Number of NEUTRONS below Cutoff=        654
```

OUTPUT DATA 11

LIGHT RANGE	TOTAL	HYDGN	C-ELAS	INEL	n,alfa	n,3-He	n,n3a	n,p	n,d	n,t	n,pX	n,2n	Gamma Rays	Equivalent Energy (MeV) Proton	Alpha	Carbon
0.0E-4 - 2.3E-4	128	36	410	1	0	0	0	0	0	0	0	0	0	0.000523	0.002943	0.00381
2.3E-4 - 9.0E-4	971	228	1936	27	0	0	0	0	0	0	0	4	0	0.004837	0.026902	0.04299
0.0009 - 0.0020	1933	381	3050	75	0	0	0	0	0	0	0	16	0	0.0170	0.0882	0.1550
0.0020 - 0.0036	2725	309	3693	93	0	0	0	0	0	0	0	30	0	0.0394	0.1758	0.3429
0.0036 - 0.0056	3656	242	4746	119	0	0	0	0	0	0	0	22	0	0.0684	0.2840	0.6455
0.0056 - 0.0081	3764	199	4599	129	0	0	0	0	0	0	0	47	0	0.1022	0.4060	1.0558
0.0081 - 0.0110	3461	169	3994	129	0	0	3	0	1	0	0	56	0	0.1392	0.5411	1.5803
0.0110 - 0.0144	2956	132	3272	113	0	0	3	0	0	0	0	70	0	0.1776	0.6864	2.2143
0.0144 - 0.0182	2203	111	2285	106	0	0	1	0	0	0	0	63	0	0.2185	0.8306	2.9389
0.0182 - 0.0225	1594	99	1537	86	0	0	1	0	0	0	0	69	0	0.2601	0.9775	3.7145
0.0225 - 0.0272	1220	117	1097	61	1	0	1	0	0	0	0	69	0	0.3024	1.1291	4.5726
0.0272 - 0.0324	917	85	789	44	0	0	3	0	0	0	0	84	0	0.3471	1.2881	5.5165
0.0324 - 0.0380	680	71	560	46	4	0	1	0	0	0	0	67	0	0.3905	1.4207	6.5369
0.0380 - 0.0441	488	75	383	33	4	0	2	0	0	0	1	63	0	0.4322	1.5478	7.6333
0.0441 - 0.0506	337	68	234	29	4	0	4	0	1	0	0	68	0	0.4740	1.6757	8.8003
0.0506 - 0.0576	202	66	91	21	4	1	10	0	1	0	1	69	0	0.5175	1.8039	10.0225
0.0576 - 0.0650	138	80	39	24	3	0	12	0	1	0	0	52	0	0.5624	1.9340	11.2933
0.0650 - 0.0729	165	62	71	27	4	1	6	0	0	0	0	64	0	0.6066	2.0650	12.5991
0.0729 - 0.0812	172	60	114	13	1	0	17	0	0	0	1	47	0	0.6516	2.1962	13.9010
0.0812 - 0.0900	175	55	124	14	1	0	7	0	0	0	0	35	0	0.6944	2.3285	15.1457
0.0900 - 0.0992	97	47	43	4	3	1	13	0	0	0	0	32	0	0.7370	2.4615	16.4171
0.0992 - 0.1089	49	41	10	2	4	1	8	0	0	0	1	17	0	0.7803	2.5953	17.7335
0.1089 - 0.1190	45	65	0	0	0	0	16	0	0	0	1	11	0	0.8246	2.7297	19.0326
0.1190 - 0.1296	30	55	0	0	0	0	7	0	0	0	2	12	0	0.8689	2.8651	20.3755
0.1296 - 0.1406	27	43	0	0	2	2	11	0	0	0	0	11	0	0.9136	3.0014	21.7717
0.1406 - 0.1521	16	41	0	0	0	0	9	0	1	0	2	4	0	0.9601	3.1349	23.1499
0.1521 - 0.1640	25	57	0	0	1	0	8	0	1	0	1	8	0	1.0073	3.2712	24.5609
0.1640 - 0.1764	26	58	0	0	3	3	12	0	0	0	2	8	0	1.0540	3.4102	26.0225
0.1764 - 0.1892	24	49	0	0	3	0	7	0	0	0	0	6	0	1.1012	3.5485	27.4538
0.1892 - 0.2025	37	51	0	0	0	0	16	1	1	0	1	10	0	1.1501	3.6863	28.8784
0.2025 - 0.2162	22	45	0	0	2	0	9	0	1	0	1	5	0	1.1995	3.8241	30.3136
0.2162 - 0.2304	35	62	0	0	4	3	8	0	0	0	0	5	0	1.2482	3.9637	31.7992
0.2304 - 0.2450	19	42	0	0	1	1	9	0	0	0	0	3	0	1.2973	4.1049	33.1983
0.2450 - 0.2601	25	57	0	0	1	2	9	0	0	0	1	9	0	1.3467	4.2470	34.5830
0.2601 - 0.2756	31	31	0	0	3	2	8	0	1	0	0	6	0	1.3964	4.3895	35.9634
0.2756 - 0.2916	26	44	0	0	1	2	6	0	1	0	0	8	0	1.4484	4.5302	37.3948
0.2916 - 0.3080	38	45	0	0	2	8	9	0	1	1	1	5	0	1.5010	4.6710	38.8623
0.3080 - 0.3249	34	29	0	0	4	3	12	1	2	0	1	11	0	1.5527	4.8123	40.3628
0.3249 - 0.3422	39	42	0	0	0	6	12	0	1	0	0	12	0	1.6047	4.9546	41.8872
0.3422 - 0.3600	35	41	0	0	1	4	9	0	0	0	0	15	0	1.6567	5.0973	43.4279
0.3600 - 0.3782	20	36	0	0	0	7	6	0	0	0	1	7	0	1.7093	5.2408	44.9548
0.3782 - 0.3969	34	38	0	0	2	2	10	0	0	0	2	12	0	1.7638	5.3859	46.4783
0.3969 - 0.4160	32	30	0	0	0	5	7	2	3	0	1	14	0	1.8182	5.5315	48.0144
0.4160 - 0.4356	27	44	0	0	0	5	10	0	1	0	0	7	0	1.8720	5.6767	49.4658
0.4356 - 0.4556	33	48	0	0	0	3	7	0	0	0	2	8	0	1.9266	5.8217	50.9265
0.4556 - 0.4761	25	36	0	0	0	5	8	1	1	0	0	7	0	1.9820	5.9671	52.3978
0.4761 - 0.4970	40	50	0	0	1	6	6	0	2	1	2	10	0	2.0381	6.1130	53.8815
0.4970 - 0.5184	34	31	0	0	2	6	9	0	3	0	2	7	0	2.0946	6.2593	55.3743
0.5184 - 0.5402	31	41	0	0	0	4	7	0	2	1	3	8	0	2.1515	6.4060	56.8773
0.5402 - 0.5625	43	47	0	0	0	2	10	2	0	0	3	13	0	2.2089	6.5530	58.3899
0.5625 - 0.5852	43	43	0	0	0	7	12	1	2	1	2	11	0	2.2682	6.7004	59.9113
0.5852 - 0.6084	40	42	0	0	0	8	7	0	3	1	4	8	0	2.3278	6.8483	61.3977
0.6084 - 0.6320	37	46	0	0	1	3	9	0	1	0	3	8	0	2.3878	6.9965	62.8886
0.6320 - 0.6561	38	38	0	0	0	8	6	1	0	1	0	10	0	2.4496	7.1450	64.3866
0.6561 - 0.6806	39	46	0	0	0	4	6	0	2	1	1	7	0	2.5121	7.2934	65.8915
0.6806 - 0.7056	37	33	0	0	0	10	10	0	1	1	1	9	0	2.5751	7.4418	67.3454

LIGHT RANGE	TOTAL	HYDGN	C-ELAS	INEL	n,alfa	n,3-He	n,n3a	n,p	n,d	n,t	n,pX	n,2n	Gamma Rays	Equivalent Energy (MeV) Proton	Alpha	Carbon
0.7056 - 0.7310	38	42	0	0	2	5	6	1	0	0	1	9	0	2.6388	7.5905	68.8001
0.7310 - 0.7569	39	38	0	0	0	10	10	0	2	2	0	7	0	2.7032	7.7395	70.2599
0.7569 - 0.7832	47	39	0	0	0	6	6	2	2	0	0	9	0	2.7681	7.8891	71.7247
0.7832 - 0.8100	41	44	0	0	1	12	4	0	0	0	2	8	0	2.8332	8.0393	73.1667
0.8100 - 0.8372	34	41	0	0	0	11	5	0	1	0	3	5	0	2.8987	8.1898	74.6065
0.8372 - 0.8649	42	39	0	0	0	8	7	0	3	1	1	3	0	2.9645	8.3405	76.0504
0.8649 - 0.8930	53	38	0	0	0	6	10	0	1	0	2	7	0	3.0305	8.4911	77.4982
0.8930 - 0.9216	42	32	0	0	0	18	12	0	1	1	1	4	0	3.0968	8.6416	78.9823
0.9216 - 0.9506	51	40	0	0	0	10	9	1	5	1	4	9	0	3.1635	8.7923	80.4883
0.9506 - 0.9801	30	34	0	0	0	9	10	0	0	0	1	7	0	3.2301	8.9433	81.9993
0.9801 - 1.0100	35	26	0	0	0	8	9	0	2	1	3	3	0	3.2964	9.0946	83.5150
1.0100 - 1.0404	44	33	0	0	0	11	8	1	3	0	1	7	0	3.3631	9.2464	84.9348
1.0404 - 1.0712	44	29	0	0	0	10	5	1	1	0	1	8	0	3.4301	9.3992	86.3095
1.0712 - 1.1025	53	33	0	0	0	14	9	0	2	1	5	11	0	3.4972	9.5522	87.6862
1.1025 - 1.1342	42	36	0	0	0	5	9	1	0	0	1	9	0	3.5646	9.7055	89.0646
1.1342 - 1.1664	41	31	0	0	0	9	8	0	4	1	4	6	0	3.6326	9.8590	90.4449
1.1664 - 1.1990	45	35	0	0	1	11	10	0	1	0	2	9	0	3.7011	10.0123	91.8269
1.1990 - 1.2321	50	29	0	0	0	9	15	2	1	2	5	8	0	3.7699	10.1602	93.2955
1.2321 - 1.2656	35	27	0	0	1	9	9	0	0	0	2	5	0	3.8393	10.3082	94.7795
1.2656 - 1.2996	43	27	0	0	1	10	15	0	0	0	3	3	0	3.9091	10.4564	96.2669
1.2996 - 1.3340	44	29	0	0	0	10	7	0	2	0	3	9	0	3.9792	10.6047	97.7576
1.3340 - 1.3689	53	39	0	0	1	8	15	1	1	1	4	11	0	4.0514	10.7532	99.2516
1.3689 - 1.4042	52	37	0	0	0	9	15	0	2	3	3	4	0	4.1246	10.9018	100.0000
1.4042 - 1.4400	54	38	0	0	0	14	12	0	1	1	3	9	0	4.1982	11.0503	100.0000
1.4400 - 1.4762	63	32	0	0	0	17	17	0	4	2	3	4	0	4.2721	11.1985	100.0000
1.4762 - 1.5129	58	35	0	0	1	10	17	0	2	1	4	9	0	4.3464	11.3469	100.0000
1.5129 - 1.5500	62	19	0	0	0	8	18	0	1	3	3	13	0	4.4216	11.4954	100.0000
1.5500 - 1.5876	59	31	0	0	0	15	14	1	1	3	6	6	0	4.4984	11.6440	100.0000
1.5876 - 1.6256	54	36	0	0	0	11	5	1	3	1	4	2	0	4.5755	11.7927	100.0000
1.6256 - 1.6641	55	28	0	0	0	14	7	1	5	2	5	6	0	4.6531	11.9415	100.0000
1.6641 - 1.7030	57	33	0	0	1	11	13	1	2	1	5	5	0	4.7311	12.0969	100.0000
1.7030 - 1.7424	44	28	0	0	0	9	10	0	0	2	1	2	0	4.8097	12.2566	100.0000
1.7424 - 1.7822	43	31	0	0	0	9	6	0	6	3	4	3	0	4.8910	12.4166	100.0000
1.7822 - 1.8225	44	26	0	0	0	8	5	1	5	3	6	3	0	4.9727	12.5768	100.0000
1.8225 - 1.8632	45	29	0	0	0	7	8	0	3	0	4	6	0	5.0548	12.7373	100.0000
1.8632 - 1.9044	50	33	0	0	0	10	11	0	1	2	3	5	0	5.1374	12.8980	100.0000
1.9044 - 1.9460	47	25	0	0	0	11	6	1	2	2	6	5	0	5.2210	13.0542	100.0000
1.9460 - 1.9881	57	35	0	0	0	14	10	0	6	2	3	4	0	5.3066	13.2022	100.0000
1.9881 - 2.0306	48	27	0	0	0	8	15	0	3	3	2	9	0	5.3928	13.3503	100.0000
2.0306 - 2.0736	69	30	0	0	0	10	10	1	4	4	9	2	0	5.4794	13.4984	100.0000
2.0736 - 2.1170	41	34	0	0	0	3	6	1	5	2	6	3	0	5.5665	13.6467	100.0000
2.1170 - 2.1609	48	37	0	0	0	14	13	0	0	1	7	2	0	5.6550	13.7950	100.0000
2.1609 - 2.2052	63	35	0	0	0	10	7	0	5	3	5	6	0	5.7445	13.9434	100.0000
2.2052 - 2.2500	53	33	0	0	0	5	9	0	4	5	3	7	0	5.8346	14.1083	100.0000
2.2500 - 2.2952	46	34	0	0	0	8	10	0	2	2	5	3	0	5.9251	14.2836	100.0000
2.2952 - 2.3409	59	34	0	0	0	6	11	0	3	6	7	3	0	6.0154	14.4594	100.0000
2.3409 - 2.3870	46	25	0	0	0	6	6	2	3	4	3	3	0	6.1027	14.6356	100.0000
2.3870 - 2.4336	39	20	0	0	0	10	6	2	4	5	4	4	0	6.1903	14.8121	100.0000
2.4336 - 2.4806	58	34	0	0	0	8	6	0	4	3	7	4	0	6.2784	14.9891	100.0000
2.4806 - 2.5281	44	23	0	0	0	8	5	1	4	4	3	3	0	6.3669	15.1465	100.0000
2.5281 - 2.5760	57	30	0	0	0	5	15	0	4	7	6	0	0	6.4557	15.3027	100.0000
2.5760 - 2.6244	55	24	0	0	0	5	10	1	5	9	4	0	0	6.5450	15.4590	100.0000
2.6244 - 2.6732	55	26	0	0	0	7	18	1	3	10	8	4	0	6.6357	15.6155	100.0000
2.6732 - 2.7225	52	25	0	0	0	7	10	0	4	1	9	1	0	6.7287	15.7721	100.0000
2.7225 - 2.7722	67	36	0	0	0	8	9	1	5	2	10	3	0	6.8220	15.9288	100.0000
2.7722 - 2.8224	64	25	0	0	0	14	7	2	5	6	10	4	0	6.9158	16.0928	100.0000

LIGHT RANGE	TOTAL	HYDGN	C-ELAS	INEL	n,alfa	n,3-He	n,n3a	n,p	n,d	n,t	n,pX	n,2n	Gamma Rays	Equivalent Energy (MeV) Proton	Alpha	Carbon
2.8224 - 2.8730	55	39	0	0	0	3	9	0	3	4	7	3	0	7.0100	16.2631	100.0000
2.8730 - 2.9241	43	18	0	0	0	6	7	0	5	5	7	0	0	7.1047	16.4337	100.0000
2.9241 - 2.9756	44	27	0	0	0	4	6	0	5	3	8	0	0	7.1997	16.6046	100.0000
2.9756 - 3.0276	47	17	0	0	0	3	14	0	5	6	10	0	0	7.2949	16.7757	100.0000
3.0276 - 3.0800	58	30	0	0	0	7	6	1	4	4	10	1	0	7.3904	16.9471	100.0000
3.0800 - 3.1329	46	29	0	0	0	1	7	0	2	3	11	1	0	7.4864	17.1161	100.0000
3.1329 - 3.1862	53	24	0	0	0	2	9	0	10	7	8	1	0	7.5828	17.2842	100.0000
3.1862 - 3.2400	62	30	0	0	0	1	10	0	9	3	12	1	0	7.6796	17.4524	100.0000
3.2400 - 3.2942	53	24	0	0	0	1	14	0	3	8	6	1	0	7.7769	17.6209	100.0000
3.2942 - 3.3489	69	26	0	0	0	4	12	1	11	8	15	1	0	7.8741	17.7896	100.0000
3.3489 - 3.4040	49	30	0	0	0	2	7	1	3	9	10	0	0	7.9717	17.9585	100.0000
3.4040 - 3.4596	61	27	0	0	1	6	11	0	4	7	11	1	0	8.0697	18.1327	100.0000
3.4596 - 3.5156	53	25	0	0	0	3	7	0	7	8	10	0	0	8.1681	18.3089	100.0000
3.5156 - 3.5721	64	28	0	0	0	4	10	0	8	11	10	3	0	8.2669	18.4853	100.0000
3.5721 - 3.6290	70	25	0	0	1	6	15	0	8	6	11	0	0	8.3661	18.6620	100.0000
3.6290 - 3.6864	81	33	0	0	0	4	13	3	7	12	12	0	0	8.4665	18.8390	100.0000
3.6864 - 3.7442	60	30	0	0	0	4	9	1	5	7	12	0	0	8.5677	19.0185	100.0000
3.7442 - 3.8025	59	23	0	0	0	0	10	0	6	8	14	0	0	8.6693	19.2206	100.0000
3.8025 - 3.8612	52	33	0	0	0	6	10	0	7	4	6	0	0	8.7713	19.4231	100.0000
3.8612 - 3.9204	53	26	0	0	0	3	9	0	7	7	7	0	0	8.8737	19.6263	100.0000
3.9204 - 3.9800	56	31	0	0	0	3	8	1	3	6	12	0	0	8.9766	19.8300	100.0000
3.9800 - 4.0401	55	28	0	0	0	1	11	1	8	2	4	0	0	9.0798	20.0297	100.0000
4.0401 - 4.1006	55	24	0	0	0	4	8	2	5	8	14	0	0	9.1835	20.2072	100.0000
4.1006 - 4.1616	55	24	0	0	0	2	15	1	5	9	7	0	0	9.2880	20.3849	100.0000
4.1616 - 4.2230	68	25	0	0	0	3	9	1	8	7	11	0	0	9.3931	20.5628	100.0000
4.2230 - 4.2849	63	26	0	0	0	3	12	0	10	6	11	0	0	9.4985	20.7410	100.0000
4.2849 - 4.3472	60	28	0	0	0	1	10	0	5	5	11	0	0	9.6044	20.9194	100.0000
4.3472 - 4.4100	72	30	0	0	0	4	16	0	14	10	12	0	0	9.7106	21.0981	100.0000
4.4100 - 4.4732	44	19	0	0	0	2	11	0	2	4	3	0	0	9.8173	21.2769	100.0000
4.4732 - 4.5369	74	35	0	0	0	1	17	0	8	11	8	0	0	9.9244	21.4561	100.0000
4.5369 - 4.6010	70	27	0	0	0	4	14	0	10	7	11	0	0	10.0326	21.6354	100.0000
4.6010 - 4.6656	67	29	0	0	0	4	14	0	6	6	11	0	0	10.1428	21.8150	100.0000
4.6656 - 4.7306	54	20	0	0	0	1	8	1	11	6	10	0	0	10.2536	21.9948	100.0000
4.7306 - 4.7961	72	41	0	0	0	3	14	0	10	6	11	0	0	10.3647	22.1854	100.0000
4.7961 - 4.8620	52	20	0	0	0	5	11	1	6	7	7	0	0	10.4763	22.3767	100.0000
4.8620 - 4.9284	71	28	0	0	0	5	15	0	9	6	16	0	0	10.5883	22.5683	100.0000
4.9284 - 4.9952	74	31	0	0	0	3	13	1	16	6	11	0	0	10.7008	22.7603	100.0000
4.9952 - 5.0625	51	23	0	0	0	1	8	0	9	8	7	0	0	10.8136	22.9525	100.0000
5.0625 - 5.1302	53	19	0	0	0	5	8	0	9	7	10	1	0	10.9269	23.1451	100.0000
5.1302 - 5.1984	70	24	0	0	0	4	14	2	12	6	10	0	0	11.0403	23.3381	100.0000
5.1984 - 5.2670	71	23	0	0	1	3	15	0	9	10	9	0	0	11.1536	23.5313	100.0000
5.2670 - 5.3361	69	30	0	0	2	3	13	1	14	6	17	0	0	11.2673	23.7249	100.0000
5.3361 - 5.4056	73	23	0	0	1	0	11	0	15	6	12	0	0	11.3814	23.9188	100.0000
5.4056 - 5.4756	69	29	0	0	2	2	15	0	10	4	14	0	0	11.4959	24.1123	100.0000
5.4756 - 5.5460	73	32	0	0	1	2	9	0	11	7	15	0	0	11.6109	24.3058	100.0000
5.5460 - 5.6169	75	28	0	0	4	1	17	1	10	8	8	0	0	11.7262	24.4995	100.0000
5.6169 - 5.6882	66	30	0	0	1	3	13	1	5	7	13	0	0	11.8419	24.6936	100.0000
5.6882 - 5.7600	86	29	0	0	1	0	9	2	15	16	15	0	0	11.9581	24.8879	100.0000
5.7600 - 5.8322	63	23	0	0	0	0	11	0	6	16	13	0	0	12.0763	25.0826	100.0000
5.8322 - 5.9049	90	29	0	0	1	2	8	0	8	32	15	0	0	12.1960	25.2775	100.0000
5.9049 - 5.9780	88	32	0	0	1	1	14	0	15	22	13	0	0	12.3161	25.4728	100.0000
5.9780 - 6.0516	102	34	0	0	0	1	14	2	13	30	17	0	0	12.4367	25.6683	100.0000
6.0516 - 6.1256	83	19	0	0	1	2	14	0	9	27	14	0	0	12.5577	25.8642	100.0000
6.1256 - 6.2001	86	27	0	0	2	1	9	2	13	27	14	0	0	12.6791	26.0683	100.0000
6.2001 - 6.2750	81	20	0	0	2	1	15	0	8	15	15	0	0	12.8009	26.2908	100.0000
6.2750 - 6.3504	70	25	0	0	1	0	11	0	7	25	11	0	0	12.9232	26.5139	100.0000

LIGHT RANGE	TOTAL	HYDGN	C-ELAS	INEL	n,alfa	n,3-He	n,n3a	n,p	n,d	n,t	n,pX	n,2n	Gamma Rays	Equivalent Energy (MeV) Proton	Alpha	Carbon
6.3504 - 6.4262	85	17	0	0	0	2	16	0	14	27	14	0	0	13.0468	26.7375	100.0000
6.4262 - 6.5025	86	28	0	0	1	1	8	1	10	29	12	0	0	13.1723	26.9617	100.0000
6.5025 - 6.5792	70	28	0	0	2	0	9	0	5	24	8	0	0	13.2983	27.1865	100.0000
6.5792 - 6.6564	87	24	0	0	0	1	14	3	10	23	13	0	0	13.4248	27.4117	100.0000
6.6564 - 6.7340	89	22	0	0	0	3	13	0	12	31	21	0	0	13.5517	27.6375	100.0000
6.7340 - 6.8121	81	32	0	0	1	0	18	0	7	19	16	0	0	13.6790	27.8639	100.0000
6.8121 - 6.8906	96	24	0	0	1	1	14	0	7	26	14	0	0	13.8069	28.0820	100.0000
6.8906 - 6.9696	91	29	0	0	0	0	15	2	16	19	20	0	0	13.9351	28.2872	100.0000
6.9696 - 7.0490	92	26	0	0	0	0	19	0	8	21	12	0	0	14.0649	28.4927	100.0000
7.0490 - 7.1289	57	20	0	0	0	0	11	0	7	13	18	0	0	14.1962	28.6986	100.0000
7.1289 - 7.2092	75	21	0	0	1	1	17	0	8	18	9	0	0	14.3280	28.9048	100.0000
7.2092 - 7.2900	75	26	0	0	2	1	8	1	5	19	17	0	0	14.4602	29.1113	100.0000
7.2900 - 7.3712	89	36	0	0	1	0	10	0	9	19	15	0	0	14.5930	29.3181	100.0000
7.3712 - 7.4529	83	26	0	0	1	0	11	0	8	16	23	0	0	14.7262	29.5252	100.0000
7.4529 - 7.5350	88	29	0	0	2	2	14	1	8	18	20	0	0	14.8598	29.7326	100.0000
7.5350 - 7.6176	85	32	0	0	0	1	11	0	10	19	12	0	0	14.9940	29.9404	100.0000
7.6176 - 7.7006	71	24	0	0	0	0	13	0	10	13	13	0	0	15.1284	30.1707	100.0000
7.7006 - 7.7841	79	30	0	0	0	0	9	1	10	18	16	0	0	15.2632	30.4106	100.0000
7.7841 - 7.8680	90	37	0	0	0	1	13	0	6	19	20	0	0	15.3986	30.6511	100.0000
7.8680 - 7.9524	80	20	0	0	2	0	16	1	7	18	13	0	0	15.5344	30.8921	100.0000
7.9524 - 8.0372	68	15	0	0	1	0	15	0	15	11	18	0	0	15.6706	31.1338	100.0000
8.0372 - 8.1225	89	26	0	0	2	0	11	0	7	19	20	0	0	15.8073	31.3761	100.0000
8.1225 - 8.2082	79	23	0	0	0	0	17	1	4	10	22	0	0	15.9445	31.6189	100.0000
8.2082 - 8.2944	85	21	0	0	1	1	17	1	7	21	17	0	0	16.0820	31.8624	100.0000
8.2944 - 8.3810	83	22	0	0	1	0	21	1	4	21	13	0	0	16.2197	32.0957	100.0000
8.3810 - 8.4681	81	32	0	0	2	2	13	0	6	18	25	0	0	16.3580	32.3156	100.0000
8.4681 - 8.5556	92	32	0	0	1	1	10	2	10	17	17	0	0	16.4967	32.5358	100.0000
8.5556 - 8.6436	81	26	0	0	1	0	14	0	7	22	13	0	0	16.6359	32.7564	100.0000
8.6436 - 8.7320	74	32	0	0	1	1	10	0	9	8	15	0	0	16.7755	32.9774	100.0000
8.7320 - 8.8209	84	24	0	0	0	2	13	1	9	23	19	0	0	16.9155	33.1987	100.0000
8.8209 - 8.9102	90	31	0	0	1	1	14	1	9	18	20	0	0	17.0551	33.4204	100.0000
8.9102 - 9.0000	83	29	0	0	3	1	13	1	10	18	12	0	0	17.1936	33.6424	100.0000
9.0000 - 9.0902	85	28	0	0	2	3	12	0	11	8	13	0	0	17.3325	33.8647	100.0000
9.0902 - 9.1809	81	22	0	0	1	0	11	2	12	17	16	0	0	17.4718	34.0805	100.0000
9.1809 - 9.2720	92	30	0	0	5	0	9	1	5	15	14	0	0	17.6116	34.2856	100.0000
9.2720 - 9.3636	87	27	0	0	1	0	13	0	8	17	20	0	0	17.7518	34.4909	100.0000
9.3636 - 9.4556	73	28	0	0	0	0	4	0	5	15	18	0	0	17.8924	34.6965	100.0000
9.4556 - 9.5481	75	21	0	0	3	0	9	1	10	8	15	0	0	18.0333	34.9022	100.0000
9.5481 - 9.6410	59	20	0	0	0	0	10	0	4	11	14	0	0	18.1745	35.1082	100.0000
9.6410 - 9.7344	68	26	0	0	0	1	11	2	1	13	18	0	0	18.3162	35.3144	100.0000
9.7344 - 9.8282	70	17	0	0	1	0	4	0	7	11	30	0	0	18.4582	35.5208	100.0000
9.8282 - 9.9225	71	26	0	0	1	1	7	0	4	13	15	0	0	18.6006	35.7274	100.0000
9.9225 -10.0172	70	20	0	0	1	0	6	0	10	13	19	0	0	18.7435	35.9342	100.0000
10.0172 -10.1124	77	35	0	0	0	0	7	0	11	8	17	0	0	18.8867	36.1638	100.0000
10.1124 -10.2080	68	42	0	0	0	0	4	1	8	11	12	0	0	19.0308	36.4042	100.0000
10.2080 -10.3041	95	27	0	0	1	1	7	0	11	18	17	0	0	19.1767	36.6452	100.0000
10.3041 -10.4006	68	27	0	0	2	2	2	0	10	14	18	0	0	19.3230	36.8866	100.0000
10.4006 -10.4976	68	25	0	0	2	0	1	0	10	11	13	0	0	19.4698	37.1284	100.0000
10.4976 -10.5950	65	25	0	0	1	0	2	1	6	9	15	0	0	19.6170	37.3707	100.0000
10.5950 -10.6929	73	32	0	0	5	0	4	1	9	10	17	0	0	19.7646	37.6135	100.0000
10.6929 -10.7912	63	29	0	0	2	0	3	2	5	7	12	0	0	19.9127	37.8567	100.0000
10.7912 -10.8900	55	22	0	0	0	1	2	1	6	7	17	0	0	20.0608	38.1025	100.0000
10.8900 -10.9892	71	33	0	0	3	0	0	0	5	11	17	0	0	20.2090	38.3520	100.0000
10.9892 -11.0889	78	30	0	0	4	0	6	0	10	4	28	0	0	20.3575	38.6019	100.0000
11.0889 -11.1890	76	32	0	0	1	0	4	0	10	5	22	0	0	20.5064	38.8523	100.0000
11.1890 -11.2896	51	15	0	0	2	2	2	1	3	11	18	0	0	20.6558	39.1033	100.0000

LIGHT RANGE	TOTAL	HYDGN	C-ELAS	INEL	n,alfa	n,3-He	n,n3a	n,p	n,d	n,t	n,pX	n,2n	Gamma Rays	Equivalent Energy (MeV) Proton	Alpha	Carbon
11.2896 -11.3906	82	30	0	0	2	0	0	1	11	7	22	0	0	20.8056	39.3547	100.0000
11.3906 -11.4921	60	26	0	0	2	1	1	1	6	8	10	0	0	20.9558	39.6066	100.0000
11.4921 -11.5940	51	22	0	0	2	0	0	1	4	4	14	0	0	21.1064	39.8590	100.0000
11.5940 -11.6964	60	28	0	0	2	0	2	1	11	6	11	0	0	21.2574	40.1304	100.0000
11.6964 -11.7992	64	23	0	0	1	0	2	0	12	8	11	0	0	21.4088	40.4259	100.0000
11.7992 -11.9025	52	19	0	0	2	1	1	0	6	4	15	0	0	21.5607	40.7223	100.0000
11.9025 -12.0062	71	25	0	0	3	0	0	1	10	8	20	0	0	21.7129	41.0196	100.0000
12.0062 -12.1104	57	27	0	0	3	2	2	1	6	5	12	0	0	21.8656	41.3177	100.0000
12.1104 -12.2150	65	26	0	0	2	0	0	1	6	8	19	0	0	22.0190	41.6167	100.0000
12.2150 -12.3201	59	30	0	0	5	0	0	1	5	3	7	0	0	22.1756	41.9166	100.0000
12.3201 -12.4256	50	16	0	0	2	1	1	1	5	3	21	0	0	22.3327	42.2174	100.0000
12.4256 -12.5316	61	24	0	0	3	0	1	0	10	9	17	0	0	22.4902	42.5190	100.0000
12.5316 -12.6380	57	23	0	0	2	1	1	0	5	4	20	0	0	22.6482	42.8214	100.0000
12.6380 -12.7449	47	18	0	0	4	0	2	1	5	6	18	0	0	22.8066	43.1248	100.0000
12.7449 -12.8522	55	22	0	0	1	0	2	0	6	6	17	0	0	22.9654	43.4290	100.0000
12.8522 -12.9600	58	23	0	0	3	0	0	1	7	2	18	0	0	23.1247	43.7340	100.0000
12.9600 -13.0682	51	20	0	0	2	0	0	0	3	6	16	0	0	23.2844	44.0338	100.0000
13.0682 -13.1769	53	23	0	0	1	1	0	1	6	3	17	0	0	23.4445	44.2933	100.0000
13.1769 -13.2860	44	8	0	0	0	0	1	2	1	5	20	0	0	23.6051	44.5532	100.0000
13.2860 -13.3956	41	16	0	0	1	2	1	0	7	4	4	0	0	23.7660	44.8136	100.0000
13.3956 -13.5056	44	24	0	0	0	1	0	0	5	6	12	0	0	23.9275	45.0744	100.0000
13.5056 -13.6161	63	31	0	0	3	1	0	1	5	7	17	0	0	24.0877	45.3357	100.0000
13.6161 -13.7270	56	23	0	0	2	3	0	0	12	5	11	0	0	24.2471	45.5974	100.0000
13.7270 -13.8384	42	23	0	0	1	0	0	0	4	2	13	0	0	24.4069	45.8595	100.0000
13.8384 -13.9502	51	16	0	0	1	0	1	0	6	7	14	0	0	24.5671	46.1221	100.0000
13.9502 -14.0625	48	21	0	0	0	2	0	1	6	3	12	0	0	24.7277	46.3852	100.0000
14.0625 -14.1752	48	20	0	0	3	0	1	0	4	7	16	0	0	24.8887	46.6486	100.0000
14.1752 -14.2884	43	12	0	0	0	1	0	1	5	5	17	0	0	25.0501	46.9125	100.0000
14.2884 -14.4020	46	20	0	0	1	1	0	0	9	0	16	0	0	25.2119	47.1769	100.0000
14.4020 -14.5161	45	14	0	0	1	4	0	0	11	1	9	0	0	25.3741	47.4417	100.0000
14.5161 -14.6306	47	25	0	0	3	0	0	0	4	1	14	0	0	25.5367	47.7069	100.0000
14.6306 -14.7456	37	16	0	0	1	1	2	1	8	1	9	0	0	25.6997	47.9725	100.0000
14.7456 -14.8610	63	28	0	0	4	4	0	1	11	0	9	0	0	25.8631	48.2967	100.0000
14.8610 -14.9769	51	21	0	0	0	1	0	0	5	0	24	0	0	26.0273	48.6285	100.0000
14.9769 -15.0932	46	30	0	0	0	1	0	0	9	1	9	0	0	26.1943	48.9613	100.0000
15.0932 -15.2100	44	21	0	0	1	0	0	0	3	0	10	0	0	26.3618	49.2951	100.0000
15.2100 -15.3272	39	21	0	0	1	0	0	1	2	0	13	0	0	26.5297	49.6299	100.0000
15.3272 -15.4449	34	19	0	0	1	0	0	1	5	0	10	0	0	26.6980	49.9656	100.0000
15.4449 -15.5630	40	15	0	0	2	0	0	1	8	3	10	0	0	26.8667	50.3024	100.0000
15.5630 -15.6816	42	19	0	0	3	0	0	0	7	0	16	0	0	27.0358	50.6401	100.0000
15.6816 -15.8006	34	10	0	0	2	0	1	1	7	1	14	0	0	27.2053	50.9787	100.0000
15.8006 -15.9201	29	11	0	0	0	0	0	0	5	1	14	0	0	27.3753	51.3184	100.0000
15.9201 -16.0400	33	13	0	0	1	0	0	0	9	0	11	0	0	27.5457	51.6590	100.0000
16.0400 -16.1604	30	17	0	0	0	0	0	1	4	1	6	0	0	27.7165	52.0005	100.0000
16.1604 -16.2812	40	27	0	0	0	0	0	1	2	0	10	0	0	27.8877	52.2725	100.0000
16.2812 -16.4025	47	21	0	0	0	0	0	0	7	1	12	0	0	28.0602	52.5450	100.0000
16.4025 -16.5242	43	24	0	0	0	0	0	0	7	0	11	0	0	28.2348	52.8179	100.0000
16.5242 -16.6464	49	19	0	0	0	0	0	0	14	1	16	0	0	28.4098	53.0912	100.0000
16.6464 -16.7690	43	21	0	0	0	0	0	0	7	1	10	0	0	28.5852	53.3648	100.0000
16.7690 -16.8921	34	21	0	0	0	0	0	0	4	0	11	0	0	28.7611	53.6389	100.0000
16.8921 -17.0156	43	18	0	0	0	0	0	0	10	1	14	0	0	28.9374	53.9134	100.0000
17.0156 -17.1396	31	21	0	0	0	0	0	0	2	0	8	0	0	29.1142	54.1883	100.0000
17.1396 -17.2640	43	28	0	0	0	0	0	1	5	0	10	0	0	29.2914	54.4635	100.0000
17.2640 -17.3889	41	25	0	0	0	0	0	0	5	0	14	0	0	29.4690	54.7392	100.0000
17.3889 -17.5142	45	20	0	0	0	0	0	1	11	0	14	0	0	29.6470	55.0153	100.0000
17.5142 -17.6400	45	21	0	0	0	0	0	0	10	0	12	0	0	29.8255	55.2917	100.0000

LIGHT RANGE		TOTAL	HYDGN	C-ELAS	INEL	n,alfa	n,n3a	n,p	n,d	n,t	n,pX	Gamma	Equivalent Energy (MeV)		
						n,3-He					n,2n	Rays	Proton	Alpha	Carbon
17.6400	-17.7662	47	26	0	0	0	0	0	1	12	0	7	0	0	30.0045	55.5686	100.0000
17.7662	-17.8929	39	22	0	0	0	0	0	0	9	0	11	0	0	30.1861	55.8458	100.0000
17.8929	-18.0200	44	18	0	0	0	0	0	3	11	0	11	0	0	30.3681	56.1423	100.0000
18.0200	-18.1476	44	17	0	0	0	0	0	0	14	0	14	0	0	30.5506	56.4630	100.0000
18.1476	-18.2756	45	23	0	0	0	0	0	1	14	1	8	0	0	30.7336	56.7843	100.0000
18.2756	-18.4041	43	16	0	0	0	0	0	1	16	0	15	0	0	30.9170	57.1063	100.0000
18.4041	-18.5330	42	20	0	0	0	0	0	1	9	1	10	0	0	31.1008	57.4291	100.0000
18.5330	-18.6624	45	30	0	0	0	0	0	0	8	0	9	0	0	31.2851	57.7525	100.0000
18.6624	-18.7922	40	21	0	0	0	0	0	0	13	0	9	0	0	31.4698	58.0766	100.0000
18.7922	-18.9225	38	16	0	0	0	0	0	1	14	0	5	0	0	31.6550	58.4014	100.0000
18.9225	-19.0532	49	23	0	0	0	0	0	1	20	0	7	0	0	31.8406	58.7268	100.0000
19.0532	-19.1844	39	16	0	0	0	0	0	2	16	1	8	0	0	32.0270	59.0530	100.0000
19.1844	-19.3160	54	28	0	0	0	0	0	1	24	0	11	0	0	32.2156	59.3799	100.0000
19.3160	-19.4481	55	25	0	0	0	0	0	0	24	0	4	0	0	32.4046	59.7074	100.0000
19.4481	-19.5806	56	24	0	0	0	0	0	2	23	0	9	0	0	32.5941	60.0378	100.0000
19.5806	-19.7136	71	27	0	0	0	0	0	2	27	0	12	0	0	32.7840	60.3867	100.0000
19.7136	-19.8470	67	21	0	0	0	0	0	0	30	0	10	0	0	32.9744	60.7365	100.0000
19.8470	-19.9809	72	26	0	0	0	0	0	2	37	0	8	0	0	33.1653	61.0872	100.0000
19.9809	-20.1152	75	24	0	0	0	0	0	1	41	0	7	0	0	33.3566	61.4386	100.0000
20.1152	-20.2500	71	26	0	0	0	0	0	3	37	0	6	0	0	33.5484	61.7909	100.0000
20.2500	-20.3852	78	26	0	0	0	0	0	0	42	0	10	0	0	33.7406	62.1441	100.0000
20.3852	-20.5209	90	19	0	0	0	0	0	5	58	0	5	0	0	33.9333	62.4981	100.0000
20.5209	-20.6570	96	19	0	0	0	0	0	3	62	0	13	0	0	34.1276	62.8529	100.0000
20.6570	-20.7936	107	22	0	0	0	0	0	1	69	0	15	0	0	34.3231	63.2085	100.0000
20.7936	-20.9306	64	20	0	0	0	0	0	1	42	0	6	0	0	34.5190	63.5650	100.0000
20.9306	-21.0681	26	19	0	0	0	0	0	2	0	0	5	0	0	34.7154	63.9223	100.0000
21.0681	-21.2060	34	18	0	0	0	0	0	4	0	0	8	0	0	34.9123	64.2805	100.0000
21.2060	-21.3444	26	13	0	0	0	0	0	3	0	0	5	0	0	35.1096	64.6394	100.0000
21.3444	-21.4832	32	22	0	0	0	0	0	3	0	0	7	0	0	35.3075	64.9992	100.0000
21.4832	-21.6225	33	16	0	0	0	0	0	1	0	0	14	0	0	35.5057	65.3599	100.0000
21.6225	-21.7622	36	19	0	0	0	0	0	1	0	0	12	0	0	35.7045	65.7213	100.0000
21.7622	-21.9024	24	15	0	0	0	0	0	1	0	0	5	0	0	35.9037	66.0815	100.0000
21.9024	-22.0430	27	13	0	0	0	0	0	4	0	0	7	0	0	36.1008	66.4353	100.0000
22.0430	-22.1841	32	24	0	0	0	0	0	0	0	0	10	0	0	36.2958	66.7899	100.0000
22.1841	-22.3256	29	18	0	0	0	0	0	1	0	0	14	0	0	36.4913	67.1453	100.0000
22.3256	-22.4676	29	16	0	0	0	0	0	2	0	0	5	0	0	36.6873	67.5014	100.0000
22.4676	-22.6100	24	14	0	0	0	0	0	2	0	0	8	0	0	36.8836	67.8583	100.0000
22.6100	-22.7529	26	17	0	0	0	0	0	3	0	0	5	0	0	37.0804	68.2159	100.0000
22.7529	-22.8962	28	16	0	0	0	0	0	0	0	0	12	0	0	37.2776	68.5742	100.0000
22.8962	-23.0400	21	13	0	0	0	0	0	0	0	0	10	0	0	37.4752	68.9333	100.0000
23.0400	-23.1842	34	23	0	0	0	0	0	1	0	0	13	0	0	37.6732	69.2932	100.0000
23.1842	-23.3289	30	18	0	0	0	0	0	0	0	0	10	0	0	37.8717	69.6538	100.0000
23.3289	-23.4740	33	20	0	0	0	0	0	4	0	0	13	0	0	38.0713	70.0152	100.0000
23.4740	-23.6196	35	17	0	0	0	0	0	1	0	0	14	0	0	38.2725	70.3773	100.0000
23.6196	-23.7656	35	21	0	0	0	0	0	2	0	0	9	0	0	38.4742	70.7401	100.0000
23.7656	-23.9121	33	16	0	0	0	0	0	1	0	0	15	0	0	38.6763	71.1037	100.0000
23.9121	-24.0590	30	19	0	0	0	0	0	1	0	0	11	0	0	38.8788	71.4681	100.0000
24.0590	-24.2064	32	18	0	0	0	0	0	0	0	0	15	0	0	39.0818	71.8332	100.0000
24.2064	-24.3542	31	16	0	0	0	0	0	2	0	0	10	0	0	39.2852	72.2106	100.0000
24.3542	-24.5025	35	20	0	0	0	0	0	1	0	0	13	0	0	39.4891	72.5986	100.0000
24.5025	-24.6512	42	20	0	0	0	0	0	4	0	0	12	0	0	39.6934	72.9876	100.0000
24.6512	-24.8004	32	17	0	0	0	0	0	2	0	0	23	0	0	39.8981	73.3774	100.0000
24.8004	-24.9500	39	20	0	0	0	0	0	0	0	0	14	0	0	40.1045	73.7682	100.0000
24.9500	-25.1001	42	27	0	0	0	0	0	0	0	0	18	0	0	40.3127	74.1598	100.0000
25.1001	-25.2506	48	18	0	0	0	0	0	2	0	0	24	0	0	40.5212	74.5523	100.0000
25.2506	-25.4016	47	16	0	0	0	0	0	3	0	0	26	0	0	40.7303	74.9457	100.0000

LIGHT RANGE		TOTAL	HYDGN	C-ELAS	INEL	n,alfa	n,n3a	n,p	n,d	n,t	n,pX	Gamma	Equivalent Energy (MeV)		
						n,3-He					n,2n	Rays	Proton	Alpha	Carbon
25.4016	-25.5530	30	21	0	0	0	0	4	0	0	7	0	40.9398	75.3401	100.0000
25.5530	-25.7049	38	32	0	0	0	0	1	0	0	8	0	41.1497	75.7353	100.0000
25.7049	-25.8572	28	19	0	0	0	0	0	0	0	5	0	41.3601	76.1314	100.0000
25.8572	-26.0100	25	10	0	0	0	0	4	0	0	6	0	41.5709	76.5284	100.0000
26.0100	-26.1632	23	15	0	0	0	0	4	0	0	5	0	41.7822	76.9263	100.0000
26.1632	-26.3169	30	18	0	0	0	0	3	0	0	6	0	41.9939	77.3251	100.0000
26.3169	-26.4710	25	17	0	0	0	0	3	0	0	4	0	42.2061	77.7248	100.0000
26.4710	-26.6256	30	18	0	0	0	0	2	0	0	6	0	42.4187	78.1266	100.0000
26.6256	-26.7806	26	20	0	0	0	0	2	0	0	7	0	42.6318	78.5321	100.0000
26.7806	-26.9361	21	15	0	0	0	0	3	0	0	5	0	42.8454	78.9385	100.0000
26.9361	-27.0920	28	22	0	0	0	0	2	0	0	7	0	43.0593	79.3458	100.0000
27.0920	-27.2484	31	18	0	0	0	0	6	0	0	5	0	43.2738	79.7541	100.0000
27.2484	-27.4052	31	17	0	0	0	0	2	0	0	9	0	43.4886	80.1632	100.0000
27.4052	-27.5625	35	18	0	0	0	0	5	0	0	10	0	43.7039	80.5733	100.0000
27.5625	-27.7202	26	14	0	0	0	0	7	0	0	7	0	43.9197	80.9843	100.0000
27.7202	-27.8784	28	17	0	0	0	0	5	0	0	6	0	44.1314	81.3962	100.0000
27.8784	-28.0370	32	14	0	0	0	0	3	0	0	13	0	44.3407	81.8091	100.0000
28.0370	-28.1961	36	21	0	0	0	0	5	0	0	13	0	44.5505	82.2228	100.0000
28.1961	-28.3556	24	16	0	0	0	0	2	0	0	6	0	44.7606	82.6375	100.0000
28.3556	-28.5156	21	12	0	0	0	0	3	0	0	0	0	44.9712	83.0530	100.0000
28.5156	-28.6760	21	17	0	0	0	0	5	0	0	0	0	45.1821	83.4695	100.0000
28.6760	-28.8369	24	20	0	0	0	0	4	0	0	0	0	45.3935	83.8869	100.0000
28.8369	-28.9982	27	20	0	0	0	0	6	0	0	0	0	45.6052	84.3051	100.0000
28.9982	-29.1600	26	18	0	0	0	0	5	0	0	0	0	45.8173	84.7240	100.0000
29.1600	-29.3222	17	11	0	0	0	0	6	0	0	0	0	46.0299	85.1439	100.0000
29.3222	-29.4849	29	17	0	0	0	0	13	0	0	0	0	46.2428	85.5647	100.0000
29.4849	-29.6480	33	19	0	0	0	0	11	0	0	0	0	46.4561	85.9864	100.0000
29.6480	-29.8116	22	16	0	0	0	0	7	0	0	0	0	46.6698	86.4090	100.0000
29.8116	-29.9756	25	22	0	0	0	0	6	0	0	0	0	46.8839	86.8326	100.0000
29.9756	-30.1401	24	13	0	0	0	0	8	0	0	0	0	47.0983	87.2570	100.0000
30.1401	-30.3050	24	23	0	0	0	0	4	0	0	0	0	47.3132	87.6823	100.0000
30.3050	-30.4704	37	17	0	0	0	0	15	0	0	0	0	47.5285	88.1086	100.0000
30.4704	-30.6362	25	21	0	0	0	0	8	0	0	0	0	47.7441	88.5357	100.0000
30.6362	-30.8025	25	17	0	0	0	0	9	0	0	0	0	47.9602	88.9638	100.0000
30.8025	-30.9692	28	20	0	0	0	0	9	0	0	0	0	48.1794	89.3927	100.0000
30.9692	-31.1364	27	21	0	0	0	0	6	0	0	0	0	48.3998	89.8226	100.0000
31.1364	-31.3040	28	23	0	0	0	0	3	0	0	0	0	48.6205	90.2533	100.0000
31.3040	-31.4721	20	19	0	0	0	0	1	0	0	0	0	48.8417	90.6850	100.0000
31.4721	-31.6406	24	16	0	0	0	0	5	0	0	0	0	49.0632	91.1176	100.0000
31.6406	-31.8096	26	22	0	0	0	0	4	0	0	0	0	49.2852	91.5510	100.0000
31.8096	-31.9790	28	27	0	0	0	0	0	0	0	0	0	49.5076	91.9854	100.0000
31.9790	-32.1489	19	20	0	0	0	0	0	0	0	0	0	49.7304	92.5227	100.0000
32.1489	-32.3192	16	18	0	0	0	0	0	0	0	0	0	49.9536	93.0653	100.0000
32.3192	-32.4900	20	18	0	0	0	0	0	0	0	0	0	50.1772	93.6096	100.0000
32.4900	-32.6612	22	22	0	0	0	0	0	0	0	0	0	50.4012	94.1557	100.0000
32.6612	-32.8329	18	15	0	0	0	0	0	0	0	0	0	50.6256	94.7035	100.0000
32.8329	-33.0050	24	23	0	0	0	0	0	0	0	0	0	50.8505	95.2530	100.0000
33.0050	-33.1776	7	11	0	0	0	0	0	0	0	0	0	51.0757	95.8043	100.0000
33.1776	-33.3506	19	19	0	0	0	0	0	0	0	0	0	51.3014	96.3573	100.0000
33.3506	-33.5241	31	26	0	0	0	0	0	0	0	0	0	51.5274	96.9121	100.0000
33.5241	-33.6980	12	10	0	0	0	0	0	0	0	0	0	51.7539	97.4686	100.0000
33.6980	-33.8724	17	17	0	0	0	0	0	0	0	0	0	51.9807	98.0268	100.0000
33.8724	-34.0472	22	24	0	0	0	0	0	0	0	0	0	52.2076	98.5868	100.0000
34.0472	-34.2225	23	25	0	0	0	0	0	0	0	0	0	52.4347	99.1486	100.0000
34.2225	-34.3982	17	14	0	0	0	0	0	0	0	0	0	52.6623	99.7121	100.0000
34.3982	-34.5744	32	28	0	0	0	0	0	0	0	0	0	52.8903	100.0000	100.0000

LIGHT RANGE		TOTAL	HYDGN	C-ELAS	INEL	n,alfa	n,3-He	n,n3a	n,p	n,d	n,t	n,pX	n,2n	Gamma Rays	Equivalent Energy (MeV) Proton	Alpha	Carbon
34.5744	-34.7510	16	15	0	0	0	0	0	0	0	0	0	0	0	53.1187	100.0000	100.0000
34.7510	-34.9281	18	17	0	0	0	0	0	0	0	0	0	0	0	53.3475	100.0000	100.0000
34.9281	-35.1056	25	25	0	0	0	0	0	0	0	0	0	0	0	53.5767	100.0000	100.0000
35.1056	-35.2836	13	15	0	0	0	0	0	0	0	0	0	0	0	53.8063	100.0000	100.0000
35.2836	-35.4620	30	29	0	0	0	0	0	0	0	0	0	0	0	54.0363	100.0000	100.0000
35.4620	-35.6409	20	22	0	0	0	0	0	0	0	0	0	0	0	54.2666	100.0000	100.0000
35.6409	-35.8202	21	20	0	0	0	0	0	0	0	0	0	0	0	54.4974	100.0000	100.0000
35.8202	-36.0000	18	20	0	0	0	0	0	0	0	0	0	0	0	54.7286	100.0000	100.0000
36.0000	-36.1802	16	21	0	0	0	0	0	0	0	0	0	0	0	54.9602	100.0000	100.0000
36.1802	-36.3609	22	16	0	0	0	0	0	0	0	0	0	0	0	55.1922	100.0000	100.0000
36.3609	-36.5420	21	19	0	0	0	0	0	0	0	0	0	0	0	55.4246	100.0000	100.0000
36.5420	-36.7236	21	18	0	0	0	0	0	0	0	0	0	0	0	55.6574	100.0000	100.0000
36.7236	-36.9056	18	20	0	0	0	0	0	0	0	0	0	0	0	55.8905	100.0000	100.0000
36.9056	-37.0881	28	26	0	0	0	0	0	0	0	0	0	0	0	56.1257	100.0000	100.0000
37.0881	-37.2710	23	20	0	0	0	0	0	0	0	0	0	0	0	56.3627	100.0000	100.0000
37.2710	-37.4544	27	27	0	0	0	0	0	0	0	0	0	0	0	56.6000	100.0000	100.0000
37.4544	-37.6382	21	22	0	0	0	0	0	0	0	0	0	0	0	56.8378	100.0000	100.0000
37.6382	-37.8225	21	14	0	0	0	0	0	0	0	0	0	0	0	57.0760	100.0000	100.0000
37.8225	-38.0072	27	24	0	0	0	0	0	0	0	0	0	0	0	57.3147	100.0000	100.0000
38.0072	-38.1924	28	20	0	0	0	0	0	0	0	0	0	0	0	57.5537	100.0000	100.0000
38.1924	-38.3780	27	21	0	0	0	0	0	0	0	0	0	0	0	57.7931	100.0000	100.0000
38.3780	-38.5641	16	18	0	0	0	0	0	0	0	0	0	0	0	58.0330	100.0000	100.0000
38.5641	-38.7506	26	26	0	0	0	0	0	0	0	0	0	0	0	58.2733	100.0000	100.0000
38.7506	-38.9376	15	12	0	0	0	0	0	0	0	0	0	0	0	58.5140	100.0000	100.0000
38.9376	-39.1250	14	12	0	0	0	0	0	0	0	0	0	0	0	58.7551	100.0000	100.0000
39.1250	-39.3129	19	22	0	0	0	0	0	0	0	0	0	0	0	58.9966	100.0000	100.0000
39.3129	-39.5012	24	19	0	0	0	0	0	0	0	0	0	0	0	59.2385	100.0000	100.0000
39.5012	-39.6900	23	25	0	0	0	0	0	0	0	0	0	0	0	59.4808	100.0000	100.0000
39.6900	-39.8792	28	21	0	0	0	0	0	0	0	0	0	0	0	59.7236	100.0000	100.0000
39.8792	-40.0689	22	26	0	0	0	0	0	0	0	0	0	0	0	59.9667	100.0000	100.0000
40.0689	-40.2590	31	27	0	0	0	0	0	0	0	0	0	0	0	60.2131	100.0000	100.0000
40.2590	-40.4496	24	23	0	0	0	0	0	0	0	0	0	0	0	60.4603	100.0000	100.0000
40.4496	-40.6406	23	23	0	0	0	0	0	0	0	0	0	0	0	60.7080	100.0000	100.0000
40.6406	-40.8321	23	21	0	0	0	0	0	0	0	0	0	0	0	60.9561	100.0000	100.0000
40.8321	-41.0240	16	13	0	0	0	0	0	0	0	0	0	0	0	61.2046	100.0000	100.0000
41.0240	-41.2164	18	19	0	0	0	0	0	0	0	0	0	0	0	61.4536	100.0000	100.0000
41.2164	-41.4092	24	22	0	0	0	0	0	0	0	0	0	0	0	61.7029	100.0000	100.0000
41.4092	-41.6025	15	15	0	0	0	0	0	0	0	0	0	0	0	61.9527	100.0000	100.0000
41.6025	-41.7962	0	0	0	0	0	0	0	0	0	0	0	0	0	62.2030	100.0000	100.0000
41.7962	-41.9904	0	0	0	0	0	0	0	0	0	0	0	0	0	62.4536	100.0000	100.0000
N(Rows)= 432																	
0SUM OF COLUMNS		47264	13127	33077	1196	239	867	2162	406	2128	1698	3294	1659	0			

AVG LIGHT/INTERACTING NEUTRON= 4.713146

Charged-particle spectra

E-Resp	Alphas	Deuterons	Protons	Tritons	3-He
0 - 1	1365	71	134	21	4
1 - 2	1634	98	213	31	20
2 - 3	1342	76	249	86	36
3 - 4	1199	68	303	91	44
4 - 5	923	80	299	107	58
5 - 6	741	99	313	124	59
6 - 7	581	72	302	120	66
7 - 8	534	81	303	139	62
8 - 9	429	84	271	133	69
9 -10	372	81	229	106	59
10 -11	362	66	233	123	61
11 -12	306	73	215	85	49
12 -13	275	74	198	87	48
13 -14	229	75	192	74	37
14 -15	190	75	175	69	18
15 -16	206	83	168	34	16
16 -17	180	79	132	32	20
17 -18	178	74	164	32	21
18 -19	114	75	137	29	13
19 -20	113	73	118	15	18
20 -21	94	70	131	18	16
21 -22	93	58	100	9	8
22 -23	76	53	95	17	5
23 -24	70	58	91	13	7
24 -25	48	51	88	11	2
25 -26	47	61	65	9	4
26 -27	54	42	80	6	1
27 -28	31	59	74	4	4
28 -29	31	44	54	4	6
29 -30	24	43	68	8	2
30 -31	16	51	75	3	2
31 -32	12	33	54	5	3
32 -33	15	27	68	4	1
33 -34	16	28	59	3	2
34 -35	5	31	69	3	2
35 -36	7	35	81	4	3
36 -37	10	30	71	7	1
37 -38	10	21	79	2	5
38 -39	13	31	87	6	4
39 -40	9	35	110	11	7
40 -41	8	27	140	9	6
41 -42	11	46	52	18	1
42 -43	13	58	63	0	0
43 -44	7	60	107	0	0
44 -45	3	88	90	0	0
45 -46	8	120	51	0	0
46 -47	3	198	73	0	0
47 -48	6	280	61	0	0

48 -49	4	0	34	0	0
49 -50	3	0	10	0	0
50 -51	6	0	0	0	0
51 -52	2	0	0	0	0
52 -53	0	0	0	0	0
Sums=	12028	3295	6628	1712	870

No(Li ions)= 676
No(Be ions)= 1296
No(B ions)= 5521

5. POTENTIAL EXTENSIONS

There are several extensions and improvements to SCINFUL that may be considered. One of these involves improving the PHOTON package to provide a better determination of gamma-ray responses so that SCINFUL could be used directly for study of responses to gamma-rays from sources. This feature could be used to obtain a better understanding of light attenuation by the scintillator.

A second improvement would involve modelling effects of materials in the near environment of the scintillator. In particular, since the liquid scintillator NE-213 must be contained, some estimates of the effects of the container could be added to the program. For the solid scintillator NE-110, effects due to a light pipe that might be coupled to the scintillator could be computed.

A third addition might be to consider programming for an extended source. In a typical experimental configuration the neutron "source" is not at a point but instead results from neutron scattering from a finite-sized sample. As discussed in Part II, computed responses are somewhat sensitive to geometric considerations. A challenging aspect of this possible extension is developing an efficient sampling routine to respresent the extended source.

A fourth addition might be adding the capability of studying other scintillators, e.g., NE-218. Besides a small effect on proton range-energy relationships, the major task would be to determine light-unit values vs charged-particle energies for all of the residual charged particles for the added scintillator type relative to those values in SCINFUL for NE-213.

Extending SCINFUL to neutron energies greater than 80 MeV will require, at the least, (a) determining effective cross sections for the major types of reactions as currently programmed, (b) determining light-unit conversions for high-energy charged particles from protons to carbon ions, (c) programming of additional multi-body reactions including capacity to handle reactions involving more than two neutrons, more than two protons (with possible escape from the detector), etc., and (d) improving the charged-particle range-energy computations and extending the program to include escape of the heavier charged particles.

The present version of SCINFUL is being "frozen" for purpose of documentation and distribution since the program should be useful and reliable for providing scintillator responses for neutrons of substantially higher energies than here-to-fore

available. Several of the above additions are being considered for implementation in the future.

6. LISTING OF THE COMPLETE SCINFUL PROGRAM

A listing of the complete program is given. The ordering of the listing starts with a routine named MAIN followed by listings of 62 routines in alphabetical order. The names of these routines and brief descriptions of purposes are as follows:

Program	MAIN	Controls the flow of the computation.
Subroutine	ALFAPD	Energetics for ^{6}Li $\rightarrow d + \alpha$ decay.
Subroutine	ALFAPT	Energetics for ^{7} Li$\rightarrow t + \alpha$ decay.
Subroutine	AP7LI	Follows ^{11}B $\rightarrow$ ^{7}Li $+\alpha$ decay, including any subsequent ^{7}Li excited ion decay.
Entries in	BANKR	Does bookkeeping, updates collision counters, increments light-unit-bin counters, and controls the final output of the calculation. The entries are named BANKR0, BANKR1, BANKR2, BANKR3, and BANKR4.
Function	BETARG	Computes electron range $\leftrightarrow$ energy relationships.
Function	CHOOSA	Choose an α energy for the direct ^{12}C $\rightarrow 3\alpha$ three-body breakup reaction.
Function	CHOOSL	Choose an azimuthal angle from a distribution described by Legendre polynomial expansion.
Function	CHOOSM	Choose a neutron energy from a Maxwellian distribution.
Function	CHOOSN	Choose a neutron energy from a distribution approximating an estimate of the continuum energy distribution following high-energy $n +$ ^{12}C inelastic reactions.

Function	CHOOSP	Choose a proton energy from a similarly estimated proton continuum energy distribution.
Subroutine	CMTRAN	Relativistic laboratory-reference frame to center-of-mass reference frame transformation calculation.
Subroutine	COMDCS	Compute polar scattering angles for electron and photon following a Compton scattering event.
Function	COMPSIG	Determine a gamma-ray scattering cross section.
Subroutine	COMPTN	Obtain an electron energy given a photon energy initiating a Compton scattering.
Subroutine	CSCAT	Finish up $n + {}^{12}\mathrm{C}$ elastic or inelastic scattering.
Subroutine	DIRCOS	Determine direction cosines from input velocity components.
Function	DOMEGA	Determine and record coordinates and direction cosines of initial interactions in the detector for NHIST events and to deduce the subtended solid angle.
Subroutine	DPLI7	Does energetics for ${}^{9}\mathrm{Be} \rightarrow d + {}^{7}\mathrm{Li}$.
Function	EFROMV	Compute particle energy from velocity relativistically correct.
Subroutine	ELI8DK	Does energetics for ${}^{8}\mathrm{Li} \rightarrow n + {}^{7}\mathrm{Li}$ and follows subsequent decay of excited ${}^{7}\mathrm{Li}$ ion.
Function	ETOL	Determines light-unit value $\leftrightarrow$ energy of charged ion, for protons, deuterons, alphas, and carbon ions.

Function	EX8LI	For alpha decay of highly-excited ^{12}B, determine excitation energy of residual ^{8}Li ion.
Function	EXLI8	For proton decay of highly-excited ^{9}Be, determine excitation energy of residual ^{8}Li ion.
Function	EXTERP	Provide interpolation from tabular data.
Subroutine	HYDROG	Kinematics for $n + p$ collisions.
Function	IBOX	Determine if a neutron interaction took place, and if so the major type of the interaction.
Subroutine	INELAS	Kinematics for inelastic neutron scattering exciting the first-excited state (at 4.43 MeV) in^{12}C.
Subroutine	INPUT	Read input data file and set up computation.
Subroutine	INTERACT	Determine if a neutron interaction took place.
Subroutine	LABTRAN	Relativistic transformation from center-of-mass reference frame to the laboratory reference frame.
Block data	LEGNDR	Legendre coefficients for $n + {}^{12}$C elastic scattering angular distributions.
Subroutine	N2N	Kinematics for $n + {}^{12}\mathrm{C} \rightarrow 2n + {}^{11}\mathrm{C}$ major reactions.
Subroutine	N3HE	Kinematics for $n + {}^{12}\mathrm{C} \rightarrow {}^{3}\mathrm{He} + {}^{10}\mathrm{Be}$ major reactions.
Subroutine	NALPHA	Kinematics for $n + {}^{12}\mathrm{C} \rightarrow \alpha + {}^{9}\mathrm{Be}$ ground-state reaction.
Subroutine	ND	Kinematics for $n + {}^{12}\mathrm{C} \rightarrow d + {}^{11}\mathrm{B}$ major reactions.

Subroutine	NN3ALF	Kinematics for $n + {}^{12}\mathrm{C} \rightarrow n' + 3\alpha$ reactions; also includes minor reactions $n + {}^{12}\mathrm{C} \rightarrow \alpha + p + \ldots$
Subroutine	NP	Kinematics for $n + {}^{12}\mathrm{C} \rightarrow p + {}^{12}\mathrm{B}$ bound-state reactions.
Subroutine	NPX	Kinematics for $n + {}^{12}\mathrm{C} \rightarrow p + {}^{12}\mathrm{B}$ unbound-state reactions and subsequent decay of highly-excited ${}^{12}\mathrm{B}$ ion.
Subroutine	NT	Kinematics for $n + {}^{12}\mathrm{C} \rightarrow t + {}^{10}\mathrm{B}$ major reactions.
Subroutine	P3ALPH	Choose reaction path for $n + {}^{12}\mathrm{C} \rightarrow n' + 3\alpha$ reaction.
Subroutine	PHOTON	Follows gamma-ray scattering.
Subroutine	PP8LI	Energetics for ${}^{9}\mathrm{Be} \rightarrow p + {}^{8}\mathrm{Li}$ decay and subsequent possible decay of the ${}^{8}\mathrm{Li}$ ion.
Block Data	PROTN	Tabular range-energy data for protons in NE-213.
Subroutine	PSCAT	Kinematics for elastic neutron scattering by ${}^{12}\mathrm{C}$.
Function	RCKE	Relativistically correct center-of-mass energy.
Subroutine	RVECT	Obtain random unit vector.
Subroutine	SEED	Start the random number generator.
Function	SIGCELAS	Return a cross section for elastic $n + {}^{12}\mathrm{C}$ collision.
Function	SIGCINEL	Return a cross section for inelastic $n + {}^{12}\mathrm{C}$ excitation of the first-excited state in ${}^{12}\mathrm{C}$.
Function	SIGCN2N	Return a cross section for ${}^{12}\mathrm{C}(n,2n)$ reaction.

Function	SIGCN3HE	Return a cross section for $^{12}C(n,^3He)$ reaction.
Function	SIGCNAL	Return a cross section for $^{12}C(n,\alpha)^9Be$ ground-state reaction.
Function	SIGCND	Return a cross section for $^{12}C(n,d)$ reaction.
Function	SIGCNN3A	Return a cross section for $^{12}C(n,n')3\alpha$ reaction.
Function	SIGCNP	Return a cross section for $^{12}C(n,p)^{12}B$ bound-state reaction.
Function	SIGCNPN	Return a cross section for $^{12}C(n,p)^{12}B$ unbound-state reaction.
Function	SIGCNT	Return a cross section for $^{12}C(n,t)$ reaction.
Function	SIGHYD	Return a cross section for $n+p$ scattering.
Subroutine	TENBDK	Energetics of decay of highly-excited ^{10}B ion.
Function	TOTALX	Determine total attenuation cross section and fractional cross sections for each major reaction channel.
Subroutine	TRANSVEC	Vector transformation from one coordinate system to another.
Function	VELOCITY	Relativistic velocity computed from ion energy.

SCINFUL is written entirely in FORTRAN and should be reasonably portable to any computer. The only functions that are specific to the VAX/VMS compiler library are the date function IDATE (the first executable statement), the time function TIME used in Subroutine SEED, and the random-number generator function RAN used throughout the program. The Subroutine SEED may need to be revised for computers with different random number generators. Some care will be needed when using FORTRAN compilers that recognize only 6 characters in a name.

The program that follows contains more than 7400 lines (including comments) of which, excepting the table of Legendre coefficients in Block Data LEGNDR, less than 10% was obtained from the O5S program. Hopefully the comments given in the listing are sufficient to follow the flow of the program as well as some of the details. Missing from this documentation are the traditional flow charts, the reason being that none were developed or used prior to the programming of the code, and none were determined a posteriori because of the possibility of presenting an incorrect flow chart from ostensibly correct programming. The programming is believed to be correct; however, some diagnostic output has been left in the programming. Hopefully, the user will understand any diagnostic message encountered during the use of the program; if not, please contact the author so that needed corrections can be made.

```
c   This is file MAIN.FOR
c
c      PROGRAM SCINFUL
c
c          Written by J. K. Dickens
c       Oak Ridge National Laboratory
c
c               February 1988
c
c
c   This program is believed to be correct.
c However, there are several diagnostic messages
c embodied in the program.  If a diagnostic is
c output and not understood by the user, the
c author should be contacted.  No warranty for
c the use of this program is explicit or implied.
c
c
c   The Oak Ridge National Laboratory is operated
c for the U. S. Department of Energy by Martin Marietta
c Energy Systems.
c
c
c
c  This is the main program to do the SCINtillator FULl-energy
c  response calculations
c
c
      Common /TRY/ Tries(8,100000)
      Common /INIT/ Nhits
      Common /TITL/ Nhist,Title(20)
      Common /NAID/ Rdet,Ht,Rcollim,Rz
      Common /NEUTRN/ Eneut, U,V,W, X,Y,Z
      Common /NEUTR2/ Eneut2, U2,V2,W2, X2,Y2,Z2
      Common /CUTOFF/ Ecutoff
      Common /NCOLLS/ Nclsns(21),Ndie,Nfirst,Ntot
c
      Open(Unit=20,file='Input.data',status='old')
      Open(Unit=21,file='NEW.lpt',status='new')
      Open(Unit=22,file='NEW.pch',status='new')
c
      CALL IDATE(I,J,K)
      Write (21,92) I,J,K
   92 Format(1H1,40x,9HToday is  ,I2,1H/,I2,3H/19,I2)
c
      CALL INPUT
      N=Nhist
      D=DOMEGA(N)
      E=FLOAT(Nhist)/FLOAT(Nhits)
      Write(21,100) Nhits,E,D
```

```
  100 Format(/22H No. of Neutrons used=,I10/22H Zero-bias efficiency=
     X 0PF13.6/23H Subtended Solid angle= ,1PE13.5,3H sr)
      Type 99,D
   99 Format(/'  Finished first part.  Domega = '1PE12.4,' sr.')
      CALL SEED(-4)
c
c Initiate all counting registers for this problem.
      CALL BANKR0
c
c The variable Nclsns(1) registers the number of neutrons that
c   strike the detector surface but don't interact in the detector.
      Nclsns(1)=Nhits-Nhist
c
c Now for those neutrons that DID interact in the detector, get the
c   starting information from the TRIES array, and chase each neutron
c   about the detector until it either finally escapes the detector
c   or else loses enough energy to fall below the ECUTOFF parameter
c   specified in the input.
c
      Nfirst=Nhist
      Ntot=Nhits
      Do 300 N=1,Nhist
      CALL BANKR1
c Bankr1 initiates registers for a specific neutron history.
      Ncoll=1
c Ncoll is the collision counter, and is +1 because
c   Nclsns(1) is the counter of zero collisions,
c   Nclsns(2) is the counter of one collision, etc.
      Eneut=Tries(7,N)
      U = Tries(4,N)
      V = Tries(5,N)
      W = Tries(6,N)
      X = Tries(1,N)
      Y = Tries(2,N)
      Z = Tries(3,N)
      Eneut2=0.0
      U2=0.0
      V2=0.0
      W2=0.0
      X2=0.0
      Y2=0.0
      Z2=0.0
c
      K = IFIX(Tries(8,N))
   35 Ncoll=Ncoll+1
      Goto (40,50,60,70,140,150,160,170,165,168), K
   40 CALL HYDROG
      Goto 200
   50 CALL PSCAT
      Goto 200
```

```
   60 CALL INELAS
      Goto 200
   70 CALL NALPHA
      Goto 250
  140 CALL NN3ALF
      Goto 200
c Next four routines may or may not have
c  a secondary output neutron.
  150 CALL N3HE
      IF (Eneut) 250,250,200
  160 CALL NPX
      IF (Eneut) 250,250,200
  165 CALL ND
      IF (Eneut) 250,250,200
  168 CALL NT
      IF (Eneut) 250,250,200
  170 CALL N2N
c
  200 IF (Eneut .LT. Ecutoff) goto 240
c
c Determine if the scattered neutron interacts again in the
c    detector.
      Path=PLNGTH(U,V,W, X,Y,Z, Rdet,Ht)
      Totx=TOTALX(Eneut)
  210 Itype= IBOX(Path,Totx,Dist)
c   If Itype = 0, the neutron has escaped without further collision.
      IF (Itype .LE. 0) goto 250
c Check to see if there is a Neutron No. 2 (from N2N or NPN routines)
      IF (Eneut2 .LE. 0.0) goto 220
c If there is one, no sense in choosing the N2N routine to go
c   through on this pass, so choose Itype again.
      IF (K .EQ. 10) goto 210
c
c  Neutron interacted again; find new interaction spot.
  220 X=X+U*Dist
      Y=Y+V*Dist
      Z=Z+W*Dist
      IF (Z.LT.0.0 .OR. Z.GT.Ht) goto 250
c Last may be an unnecessary check on single-precision arithmetic.
      K=Itype
      Goto 35
c
  240 Ndie=Ndie+1
c    That's for the case where E(neutron) < Ecutoff.
  250 IF (Eneut2 .LE. 0.0) goto 280
c    Something in the 2d neutron array.
      Eneut=Eneut2
      U=U2
      V=V2
      W=W2
```

```
      X=X2
      Y=Y2
      Z=Z2
      Eneut2=0.0
      U2=0.0
      V2=0.0
      W2=0.0
      X2=0.0
      Y2=0.0
      Z2=0.0
      Goto 200
c Okay.  End of event number N.
  280 CALL BANKR3
c      BANKR3 increments counting registers.
      IF (Ncoll .GT. 21) Ncoll=21
      Nclsns(Ncoll)=Nclsns(Ncoll)+1
  300 Continue
c
c End of analysis of all interacting neutrons.
      CALL BANKR4
c     BANKR4 oversees the printed output.
      END FILE 21
      END FILE 22
      Call SEED(-2)
      Stop 'Completed files NEW.LPT and NEW.PCH'
      END
```

```
c   This is file ALFAPD.FOR
c
      Subroutine ALFAPD(Excita,V6Li)
c
c          6-Li --> d + alpha.
      Common /COLLIS/ Nelm,Echrg(6)
c
      Data Kd/10/, Ka/3/, He4pd/1.474/
c
      Ta=Excita-He4pd
      Ed=RCKE(Kd,Ka,Ta)
      Vd=VELOCITY(Kd,Ed)
      CALL RVECT(Xd,Yd,Zd)
      Vdx=Xd*Vd
      Vdy=Yd*Vd
      Vdz=Zd*Vd
      CALL LABTRAN(Vdx,Vdy,Vdz, V6Li, Vx,Vy,Vz)
      Vdl=SQRT(Vx*Vx + Vy*Vy + Vz*Vz)
      Echrg(3)=EFROMV(Kd,Vdl)
c That's it for the deuteron.  Now get alpha energy.
      Eac=Ta-Ed
      Vac=VELOCITY(Ka,Eac)
      Vax=-Xd*Vac
      Vay=-Yd*Vac
      Vaz=-Zd*Vac
      CALL LABTRAN(Vax,Vay,Vaz, V6Li, Vx,Vy,Vz)
      Va=SQRT(Vx*Vx + Vy*Vy + Vz*Vz)
      Echrg(5)=EFROMV(Ka,Va)
      Return
c At exit have E(deuteron) in Echrg(3) and E(alpha) in Echrg(5).
      END
```

```
C   This is file ALFAPT.FOR
c
      Subroutine ALFAPT(Excitn,V7Li)
c
c Does energetics for  7-Li --> alpha + triton.
c
      Common /COLLIS/ Nelm,Echrg(6)
c
      Data Ka/3/, Kt/13/, He4pt/2.467/
c
      Ta=Excitn-He4pt
      Et=RCKE(Kt,Ka,Ta)
      CALL RVECT(Xt,Yt,Zt)
      Vtc=VELOCITY(Kt,Et)
      Vtx=Xt*Vtc
      Vty=Yt*Vtc
      Vtz=Zt*Vtc
      CALL LABTRAN(Vtx,Vty,Vtz, V7Li, Vx,Vy,Vz)
      Vt=SQRT(Vx*Vx + Vy*Vy + Vz*Vz)
      Echrg(6)=EFROMV(Kt,Vt)
c Triton done.  Get alpha energy.
      Ealf=Ta-Et
      Valf=VELOCITY(Ka,Ealf)
      Vax=-Xt*Valf
      Vay=-Yt*Valf
      Vaz=-Zt*Valf
      CALL LABTRAN(Vax,Vay,Vaz, V7Li, Vx,Vy,Vz)
      Va=SQRT(Vx*Vx + Vy*Vy + Vz*Vz)
      Echrg(5)=EFROMV(Ka,Va)
c   and that gets the alpha energy.
      Return
      END
```

```
C  This is file AP7LI.FOR
c
      Subroutine AP7LI(Ta,V11B,Eg)
C  Purpose is to follow  11-B --> 7-Li + alpha  decay, including
c  any subsequent 7-Li excited ion decay.
c
      Real*4 Li6pn
      Common /RANDM/  Irx
      Common /VECTOR/ Xpn,Ypn,Zpn, Xn,Yn,Zn
c Xn,Yn,Zn at entry are direction cosines of 11-B ion in
c     "detector" coordinates.
      Common /MASSES/ Emass(19)
      Common /NEUTRN/ Eneut, U,V,W,X,Y,Z
      Common /NEUTR2/ Eneut2, U2,V2,W2,X2,Y2,Z2
      Common /COLLIS/ Nelm,Echrg(6)
      Common /EXC7LI/ E7Li(6),Li6pn
c See Subroutine ELI8DK for values in EXC7LI common.
      Common /EXC6LI/ E6Li(6),He4pd
c See Subroutine TENBDK for values in EXC6LI common.
c
      Data Ka/3/, K7Li/17/, Kn/1/, K6Li/18/
c
      Eax=RCKE(Ka,K7Li,Ta)
      Eamin=0.0
      Ndx=0
      IF (Eneut .LE. 0.0) goto 5
c Program counter to here means call to AP7LI came from NPX subroutine.
c   Otherwise call came from subroutine ND.
      Ndx=1
c Check to see if there is a 2d neutron waiting to be processed.  If so
c   then fix 11-B decay only to n-stable states of 7-Li.
      IF (Eneut2 .LE. 0.0) goto 5
c   Fix 11-B ion decay by limiting minimum value of energy of out-
c   going alpha particle.
      Eamin=Ta-Li6pn
    5 Temp=4.0
c See comments just prior to statement 38 in subroutine NN3ALF for
c    estimating "alpha" continuum.
    6 Eatry=CHOOSP(Eax,Temp)
      IF (Eatry .LT. Eamin) goto 6
      Try=Eatry*(Emass(Ka) + Emass(K7Li))/Emass(K7Li)
      Etry=RCKE(Ka,K7Li,Try)
      Try=Try*Eatry/Etry
      Excit=Ta-Try
c Now, maybe, set  -EXCIT-  to specific energy level in 7-Li.
      Level=7
      IF (Excit .GT. 11.0) goto 10
      K=1
      Do 8 I=2,6
      IF (Excit .LT. E7Li(I)) goto 9
```

```
    8 K=K+1
    9 Excit=E7Li(K)
      Level=K
   10 Taex=Ta-Excit
      Eaa=RCKE(Ka,K7Li,Taex)
      CALL RVECT(Xp,Yp,Zp)
      Vaa=VELOCITY(Ka,Eaa)
      Vax=Xp*Vaa
      Vay=Yp*Vaa
      Vaz=Zp*Vaa
      CALL LABTRAN(Vax,Vay,Vaz, V11B, Vx,Vy,Vz)
      Valf=SQRT(Vx*Vx + Vy*Vy + Vz*Vz)
      Ealf=EFROMV(Ka,Valf)
      Echrg(4)=Ealf
c That gets the alpha information.
c Now get 7-Li ion information
      E7Lic=Taex-Eaa
      V7Lic=VELOCITY(K7Li,E7Lic)
      V7x=-Xp*V7Lic
      V7y=-Yp*V7Lic
      V7z=-Zp*V7Lic
      CALL LABTRAN(V7x,V7y,V7z, V11B, Vx,Vy,Vz)
      V7Li=SQRT(Vx*Vx + Vy*Vy + Vz*Vz)
      IF (Level .GE. 3) goto 15
c Program to here have bound state of 7-Li to tidy up.
      Eg=Excit
      Echrg(3)=EFROMV(K7Li,V7Li)
      Return
c
c Next: decide 7-Li particle decay mode.
   15 IF (Level .GE. 5) goto 20
c If program to here have  7-Li --> alpha + triton  decay mode.
      CALL ALFAPT(Excit,V7Li)
      Return
c
c Next is for  7-Li --> n + 6-Li  decay mode.  First get 7-Li motion
c   into detector coordinates.
   20 CALL DIRCOS(Vx,Vy,Vz, Xpn,Ypn,Zpn)
      Zx=Xn
      Zy=Yn
      Zz=Zn
      CALL TRANSVEC(Zx,Zy,Zz)
C Done.  Now get neutron information.
      Ta=Excit-Li6pn
      Enmax=RCKE(Kn,K6Li,Ta)
      Ehat=Enmax+5.0
      Fn=0.065 + 0.001*Ehat
      Temp=Fn*Ehat
      Eloww=0.0
      Enn=CHOOSN(Eloww,Enmax,Temp)
```

```
      Try=Enn*(Emass(Kn) + Emass(K6Li))/Emass(K6Li)
      Entry=RCKE(Kn,K6Li,Try)
      Try=Try*Enn/Entry
      Excitn2=Ta-Try
c Maybe pair -EXCITN2-  with energy of a level in 6-Li
      Level=7
      IF (Excitn2 .GT. 20.0) goto 25
      K=1
      Do 22 I=2,6
      IF (Excitn2 .LT. E6Li(I)) goto 23
   22 K=K+1
   23 Excitn2=E6Li(K)
      Level=K
      IF (K .EQ. 3) Eg=Excitn2
c
   25 Taex=Ta-Excitn2
      En2c=RCKE(Kn,K6Li,Taex)
      Vn2c=VELOCITY(Kn,En2c)
      CALL RVECT(Xp,Yp,Zp)
      Vn2x=Xp*Vn2c
      Vn2y=Yp*Vn2c
      Vn2z=Zp*Vn2c
      CALL LABTRAN(Vn2x,Vn2y,Vn2z, V7Li, Vx,Vy,Vz)
      Vn2=SQRT(Vx*Vx + Vy*Vy + Vz*Vz)
      En2=EFROMV(Kn,Vn2)
c Transform neutron dir. cos. into "detector" coordinates.
      CALL DIRCOS(Vx,Vy,Vz, Xpn,Ypn,Zpn)
      Zx=Xn
      Zy=Yn
      Zz=Zn
      CALL TRANSVEC(Zx,Zy,Zz)
c Now recall whether call to this routine was from Subroutine NPX
c    or subroutine ND.
      IF (Ndx .EQ. 1) goto 27
c Program counter to here, Subroutine ND was calling routine, so
c   store information into /NEUTRN/ common variables.
      Eneut=En2
      U=Xn
      V=Yn
      W=Zn
      Goto 28
c Next is when calling subroutine was NPX; store information into
c   /NEUTR2/ common variables.
   27 Eneut2=-En2
c    Negative value to alert Subroutine BANKER; it will be corrected
c      at the exit of the calling routine.
      U2=Xn
      V2=Yn
      W2=Zn
      X2=X
```

```
      Y2=Y
      Z2=Z
c Done.  Now get 6-Li ion information.
   28 E6Lix=Taex-En2c
      V6Lic=VELOCITY(K6Li,E6Lix)
      V6x=-Xp*V6Lic
      V6y=-Yp*V6Lic
      V6z=-Zp*V6Lic
      CALL LABTRAN(V6x,V6y,V6z, V7Li, Vx,Vy,Vz)
      V6Li=SQRT(Vx*Vx + Vy*Vy + Vz*Vz)
c See Subroutine TENBDK for decay characteristics of levels of 6-Li
      IF (Level .EQ. 2) goto 30
      IF (Level .GE. 4) goto 30
c Program to here, bound state of 6-Li.  Tidy up.
      Echrg(3)=EFROMV(K6Li,V6Li)
      Return
c
c      Last section -- 6-Li --> d + alpha
   30 CALL ALFAPD(Excitn2,V6Li)
      Return
c See end of subroutine ELI8DK for -Echrg- array at end of this
c   routine.
      END
```

```
c   This is file BANKER.FOR
c Purpose is to do the bookkeeping, updating collision counters,
c   incrementing light-unit-bin counters, etcetera
c
c Programming follows organization of the O5S Code.
c
c   Added (n,d) reaction channel 2/87.
c   Added (n,t) reaction channel 3/87.
c   Added photon reactions tally 3/87.
c   Added (n,2np) reaction tally 4/87.
c   Added (n,2p) and (n,2pn) reactions -- 5/87.
c   Added (n,dn) reaction -- 5/87.
c   Added decay of highly excited 10-B to give
c     multi-body breakup reaction -- 5/87.
c   Added decay of highly excited 8-Li to give
c     additional multi-body breakup -- 5/87.
c   Added (n,3-He) and (n,3-He n) reactions -- 6/87.
c   Attenuation of light by the scintillator added 6/87.
c   Z-interaction distribution included 7/87.
c
      Subroutine BANKR
C
      Integer SUMA,SUMB,SUMC,SUMCP,SUMD,SUME,SUMF,SUMG,SUMH,SUMJ,Sumk
      Integer SBOXT(475),SBNNPR(475),SB1H(475),SBCNLY(475),SB1AOH(475),
     A  SBND(475), SB3AOH(475), SBNP(475), SBNPN(475), SBN2N(475),
     B  Sphot(475),S3He(475),Alspec(100),Dspec(100),Pspec(100),Sboxes
     C  ,S3HeX,Sumt,Sbnt(475),Tspec(100),Hspec(100),Zsave(10)
      Integer CountLi,CountBe,CountB
c
      Common /LTABLE/ ITAB,ENE(124),HYDL(124),CARL(124),ALPL(124),
     x Dlight(124)
      Common /NBOXES/ Wbox
      Common /NEUTRN/ Eneut, U, V, W, X, Y, Zint
      Common /NAID/   Rdet,Ht,Rjk,Rkn
      Common /COLLIS/ Nelm,Echrg(6)
      Common /NCOLLS/ Nclsns(21),Ndie,Nfstcl,Ntcoll
      Common /MAXWEL/ Esourc,Elow,Temp
      Common /GFLAG/  Igflag
      Common /NEUTR2/ En2, U2,V2,W2, X2,Y2,Z2
      Common /GAMATN/ Grho
c
      Dimension BINS(476),Bno(476)
      Dimension LSAVE(30)
c
      Data Lboxes/475/, Sboxes/100/
C (Variable -LBOXES- is the number of light-unit bins.)
C
C  BANKRO INITIALIZES CASE PARAMETERS.
      ENTRY BANKRO
C     Compute values of Light Bins
```

```
      BINS(1)=0.0
      Bno(1)=1.0
      DO 1011 I = 1,Lboxes
      Bno(I+1)=Bno(I)+1.0
 1011 BINS(I+1) = (I*WBOX)**2
      Do 1020 I=1,10
 1020 Zsave(I)=0
C
C  INITIALIZE COUNTERS
C     NTCOL COUNTS THE TOTAL COLLISIONS.
C     NFSTCL COUNTS THE NEUTRONS HAVING AT LEAST ONE COLLISION.
C     NPRTES COUNTS THE PROTONS WHICH LEAK OUT OF THE SCINTILLATOR.
C     NDLOST counts leaking deuterons.
C     NDIE counts number of neutrons which have E < Ecutoff after one
C       or more scatterings (but are still in the detector).
C     NHYD COUNTS THE (N,H) REACTIONS.
C     NELAS COUNTS THE INELASTIC CARBON COLLISIONS.
C     NALP COUNTS THE (N, ALPHA) COLLISIONS.
C     N3ALP COUNTS THE (N, NPRIME, 3 ALPHA) COLLISIONS.
c     NONA1 counts (n,alpha p) Reactions -- see subroutine NN3ALF
c     NONA2 counts (n,alpha pn) Reactions -- also NN3ALF routine.
c     NONA3 counts (n,alpha p2n) Reactions -- also NN3ALF routine.
c     NONA4 counts (n,2alpha pnt) Reactions -- also NN3ALF routine.
c     NONA5 counts (n,2alpha p2nd) Reactions -- also NN3ALF routine.
C     NONP COUNTS THE (N,P) REACTIONS.
C     NOND Counts the (N,D) Reactions (added in after O5S).
C     NONDA count (n,d alpha 7-Li) events, Function ND
c     NONDN Counts the (N,DN) Reactions -- see Function ND
c     NONDN1 counts (n,dnp 9-Be) multibody reactions.
c     NONDN2 counts (n,dnd 2alpha) multibody reactions.
c     NONDN3 counts (n,dn alpha 6-Li) multibody reactions.
C     NONT Counts the (N,T) Reactions (added in after N,D)
c     NONT1 counts (n,tp 9-Be) multibody reactions.
c     NONT2 counts (n,td 2alpha) multibody reactions.
c     NONT3 counts (n,t alpha 6-Li) multibody reactions.
c     NONT4 counts (n,t pn 2alpha) reactions.
c     NONT5 counts (n,t pd 7-Li) reactions.
C     NONPN COUNTS THE (N,PN) REACTIONS.
c     NONP2N counts (n,p2n) reactions -- in Funtion NPX
c     NON2P counts the (n,2p) reactions -- see Function NPX
c     NON2PN counts the (n,2pn) reactions -- also Function NPX
c     NONP0 counts (n,p alpha) reactions -- also Function NPX
c     NONP1 counts (n,pn alpha) reactions -- also Function NPX
c     NONP2 counts (n,p2nd 2alpha) reactions -- also Function NPX
c     NONP3 counts (n,p2n alpha) reactions -- also Function NPX
c     NONP4 counts (n,2p2n) reactions -- also Function NPX
c     NONP5 counts (n,pnt 2alpha) reactions -- also Function NPX
C     NON2N COUNTS THE (N,2N) COLLISIONS.
c     NON2NP counts the (N,2NP) Collisions -- in Function N2N;
c       see also (n,p2n) reaction counter above.
```

```
c     NCLSNS counts the collision distribution.
c     NHONCE counts the number of neutrons having at least one
c       hydrogen collision.
c     NCONCE counts the number of neutrons having at least one carbon
c       collision.
c     NPHOT counts gamma rays detected.  Note: gamma rays MUST have
c       an accompanying (N,X) reaction, and so will not be included
c       in NTCOL.
c     NON3HE counts the (n,3-He) Collisions -- 6/87 addition.
c     NON3HEN counts the (n,3-He n) collisions -- also 6/87.
c     NONH1 counts (n,3-He 2n 2alpha) collisions;
c     NONH2 counts (n,3-He np 8-Li) collisions;
c     NONH3 counts (n,3-He 2np 7-Li) collisions; and
c     NONH4 counts (n,3-He 2npt alpha) collisions -- 7/87.
C
 1060 NTCOL  = 0
      NON3HE = 0
      NON3HEN= 0
      NONH1  = 0
      NONH2  = 0
      NONH3  = 0
      NONH4  = 0
      NFSTCL = 0
      NPRTES = 0
      Ndlost = 0
      Ndie   = 0
      NHYD   = 0
      NCARB  = 0
      NELAS  = 0
      NALP   = 0
      N3ALP = 0
      NONA1 = 0
      NONA2 = 0
      NONA3 = 0
      NONA4 = 0
      NONA5 = 0
      NONP  = 0
      NOND  = 0
      Nonda = 0
      NONDN = 0
      Nondn1 = 0
      Nondn2 = 0
      Nondn3 = 0
      NONT  = 0
      Nont1 = 0
      Nont2 = 0
      Nont3 = 0
      Nont4 = 0
      Nont5 = 0
      NONPN = 0
```

```
      NONP2N = 0
      NON2P  = 0
      NON2PN = 0
      NONP0 = 0
      NONP1 = 0
      NONP2 = 0
      NONP3 = 0
      NONP4 = 0
      NONP5 = 0
      NON2N = 0
      NON2NP = 0
      NHONCE = 0
      NCONCE = 0
      Nphot = 0
        DO 1061 L=1,21
 1061 NCLSNS(L)=0
C INITIALIZE REACTION LIGHT BINS.
      DO  1070  L = 1, LBOXES
      SBOXT(L) = 0
      SB1H(L) = 0
      SBCNLY(L) = 0
      SBNNPR(L) = 0
      SBND(L) = 0
      SBNT(L)  = 0
      SB1AOH(L) = 0
      SB3AOH(L) = 0
      SBNP(L) = 0
      SBNPN(L) = 0
      SBN2N(L) = 0
      Sphot(L) = 0
      S3He(L)=0
 1070 CONTINUE
c Added in determinations of alpha, deuteron, and proton spectra.
c   First initialize spectra arrays -- bins will be 1 MeV in
c   response energy.
c Added in triton spectrum, too.
c And, finally, 3-He spectrum.
c Keep count of 'heavy' ions -- Li, Be, and B
      Do 1071 L=1,Sboxes
      Dspec(L)=0
      Tspec(L)=0
      Pspec(L)=0
      Hspec(L)=0
 1071 Alspec(L)=0
      CountLi=0
      CountBe=0
      CountB=0
      RETURN
C
C
```

```
C                    INDIVIDUAL HISTORY INITIALIZATION
      ENTRY BANKR1
c
C   INITIALIZE THE LIGHT SUMMATION PARAMETER FOR THIS NEUTRON.
      FLIGHT=0.
C   INITIALIZE THE COLLISION INDICATION PARAMETERS.
      NTEST=0
      NCTST=0
C   INITIALIZE COLLISION COUNTERS
c      These will be used in the "P.S.D." analysis for NE-213, if
c      requested.
      DO  2010  I = 1, 30
 2010 Lsave(I) = 0
      Npsd=1
      Nprej=Nprtes
      Ndrej=Ndlost
      RETURN
C
C                    COLLISION ANALYSIS
C  BANKR2 ANALYZES THE LIGHT GIVEN IN THE FOLLOWING REACTIONS
C    1. NELM=1,   N+H-->N+H, PROTON LEAKAGE CONSIDERED.
C    2. NELM=2, N+12C-->N+12C, ELASTIC.
C    3. NELM=3, N+12C-->N+12C, INELASTIC.
C    4. NELM=4, N+12C-->ALPHA+9BE(ground state only)
C    5. NELM=5, N+12C-->N+3*ALPHA
C    6. NELM=6, N+12C-->P+12B, PROTON LEAKAGE CONSIDERED.
C    7. NELM=7, N+12C-->P+N+11B, PROTON LEAKAGE CONSIDERED; also
c    possible N+12C-->P+P+11Be and
c    possible N+12C-->P+P+N+10Be reactions.
C    8. NELM=8, N+12C-->N+N+11C, with possible 11-C --> p + 10-B.
C    9. NELM=9, N+12C-->D+11B  (Added in after O5S)
C    with subsequent 11B-->N+10B possibility.
C   10. NELM=10.  Photon interaction in the detector (added after O5S).
C   11. NELM=11.  N+12C-->T+10B  (Added in after O5S)
C   12. NELM=12.  N+12C --> 3He+10-Be  (Added in 6/87; more in 7/87).
C
      ENTRY BANKR2
C  INITIALIZE LIGHT SUMMER.
      AMTLT = 0.
C  BRANCH ON COLLISION TYPE.
      GO TO (10, 20, 20, 40, 50, 10, 10, 20, 60, 70, 75, 80), NELM
c
C  NELM=1.  IN ORDER TO APPROPRIATELY CALCULATE THE AMOUNT OF LIGHT
C       GIVEN INSIDE THE SCINTILLATOR, FIRST FIND THE AMOUNT
C       CORRESPONDING TO THE ENERGY ORIGINALLY GIVEN THE PROTON, THEN
C       FIND THE AMOUNT CORRESPONDING TO THE ENERGY WITH WHICH
C       THE PROTON ESCAPED THE SCINTILLATOR.  THE ACTUAL AMOUNT IS THE
C       DIFFERENCE OF THESE QUANTITIES.    (NOTE---  THIS SAME
C       PROCEDURE IS USED FOR NELM = 6 AND NELM = 7.)
   10 En=Echrg(1)
```

```
c Get proton light, then check for possible proton escape.
      N=2
      Amtlt=ETOL(N,En)
      Ep=Echrg(2)
      IF (Ep .LE. 0.0) goto 12
      Nprtes=Nprtes+1
      Amtlt=Amtlt-ETOL(N,Ep)
   12 IF (Nelm .GE. 6) goto 15
      NHYD = NHYD + 1
c Keep tabs on interaction spot.
      Depth = 1.0 + 10.0*Zint/Ht
      Idepth=IFIX(Depth)
      IF (Idepth .GT. 10) Idepth=10
      Zsave(Idepth)=Zsave(Idepth) + 1
      IF (Ntest .GT. 0) goto 3400
      Ntest=1
      Nhonce=Nhonce+1
      Goto 3400
c
c    Increment proton spectrum -- only protons from 12-C reactions.
   15 L=1+IFIX(Echrg(1))
      IF (L.GT.Sboxes) L=Sboxes
      Pspec(L)=Pspec(L)+1
c     Now finish up with carbon light ---
c Test for tertiary reaction channel active
      IF (Nelm .EQ. 7) goto 16
c It's not, so finish up 12-B particle-stable system
      N=4
      En=Echrg(3)
      IF (En .GT. 0.0) Amtlt=Amtlt + 1.2*ETOL(N,En)
      CountB = CountB + 1
c Boron-ion light somewhat larger than Carbon-ion light (see Nucl.
c  Instrum. Methods 138 (1976) 93).
      Nonp=Nonp+1
      Goto 3400
c
c NELM=7, tertiary reaction: first check for triton reaction
   16 IF (Echrg(3) .LE. 0.0) goto 63
c Not that; check for alpha emission
      IF (Echrg(4) .GT. 0.0) goto 74
c Not that; try for second proton emission
      IF (Echrg(5) .GT. 0.0) goto 67
c No second proton; take care of residual boron-ion energy.
      En=Echrg(3)
      N=4
      Amtlt=Amtlt+1.2*ETOL(N,En)
      CountB = CountB + 1
      IF (En2 .GE. 0.0) Nonpn=Nonpn+1
      IF (En2 .LT. 0.0) Nonp2n=Nonp2n+1
      Goto 3400
```

```
   11 IF (Eneut .GT. 0.0) goto 13
      NON2P=NON2P + 1
      Goto 3400
   13 IF (En2 .GE. 0.0) Non2pn=Non2pn+1
      IF (En2 .LT. 0.0) Nonp4 = Nonp4 + 1
      Goto 3400
c   Next is for n + 12-C --> p + alpha + x-Li + 0,1,2 neutrons
   14 IF (Eneut .GT. 0.0) goto 19
      Nonp0=Nonp0+1
      Goto 3400
   19 IF (En2 .GE. 0.0) Nonp1=Nonp1+1
      IF (En2 .LT. 0.0) Nonp3=Nonp3+1
      Goto 3400
c   Next is for n + 12-C --> p + alpha + n + triton + alpha
   18 Nonp5=Nonp5+1
      En=Echrg(6)
      L=1+IFIX(En)
      IF (L .GT. Sboxes) L=Sboxes
      Tspec(L)=Tspec(L)+1
      N=8
      Amtlt=Amtlt+0.8*ETOL(N,En)
      Goto 3400
c
C  NELM=2, 3, or 8.  GET LIGHT GIVEN BY CARBON.
   20 En=Echrg(1)
      N=4
      Amtlt=ETOL(N,En)
      IF (Nelm-3) 25,30,35
   25 NCARB=NCARB+1
      IF (Nctst .GT. 0) goto 3400
      Nctst=1
      Nconce=Nconce+1
      Goto 3400
   30 NELAS=NELAS+1
      Goto 3400
c   Next is for (N,2N) with added feature of subsequent 11-C decay
   35 Enn=Echrg(2)
      IF (Enn .GT. 0.0) goto 36
      Non2n=Non2n+1
      Goto 3400
   36 Amtlt=Amtlt +0.2*ETOL(N,En)
c That increments from 'Carbon' to 'Boron' light
      CountB=CountB+1
      N=2
      Amtlt=Amtlt+ETOL(N,Enn)
c Increment proton spectrum
      L=1+IFIX(En)
      IF (L .GT. Sboxes) L=Sboxes
      Pspec(L)=Pspec(L)+1
      Non2np=Non2np+1
```

```
c Now check for proton escape.
      En=Echrg(3)
      IF (En .LE. 0.0) goto 3400
      Nprtes=Nprtes+1
      Amtlt=Amtlt-ETOL(N,En)
      Goto 3400
c
C  NELM=4.  INCREMENT (N,ALPHA) COUNTER.
   40 NALP = NALP + 1
      En=Echrg(1)
c Increment alpha spectrum array.
      L=1+IFIX(En)
      IF (L .GT. Sboxes) L=Sboxes
      Alspec(L)=Alspec(L)+1
c Get alpha light --
      N=6
      Amtlt=ETOL(N,En)
c AMTLT is the alpha light; now get the Be light.
      En=Echrg(2)
      N=4
      Amtlt=Amtlt+1.33*ETOL(N,En)
      CountBe=CountBe+1
c Be light is about 1.33 x C light (G. Dietze and H. Klein,
c   PTB-Bericht ND-22 (1982)).
      Goto 3400
c
c  NELM=5.  INCREMENT (N, 3 ALPHA) COUNTER.
   50 IF (Echrg(4) .GT. 0.0) goto 53
      N3ALP = N3ALP + 1
      Amtlt=0.0
      I1=1
      I2=3
c       The alpha spectrum will have 3 alphas for each event.
   51 N=6
      Do 52 I=I1,I2
      En=Echrg(I)
      L=1+IFIX(En)
      IF (L .GT. Sboxes) L=Sboxes
      Alspec(L)=Alspec(L)+1
c   However, the alpha light is summed -- 1 count for each event.
   52 Amtlt=Amtlt+ETOL(N,En)
      Goto 3400
c
c Account for possible 8-Li breakup reactions.
   53 En=Echrg(4)
      N=2
      L=1+IFIX(En)
      IF (L .GT. Sboxes) L=Sboxes
      Pspec(L)=Pspec(L)+1
      Amtlt=ETOL(N,En)
```

```
      En=Echrg(2)
c Test for proton escape.
      IF (En .GT. 0.0) Amtlt=Amtlt-ETOL(N,En)
      IF (En .GT. 0.0) Nprtes=Nprtes+1
c Check for triton decay mode.
      En = Echrg(6)
      IF (En .LE. 0.0) goto 55
c Program counter to here, had triton + (second) alpha.
      N=8
      Amtlt=Amtlt+0.8*ETOL(N,En)
      Nona4=Nona4+1
      L=1+IFIX(En)
      IF (L .GT. Sboxes) L=Sboxes
      Tspec(L)=Tspec(L)+1
c (Shift Echrg array for convenience for final two alphas.)
   54 Exx=Echrg(1)
      Echrg(1)=Echrg(4)
      Echrg(4)=Exx
      I1=4
      I2=5
      Goto 51
c Next programming--not triton, so test for deuteron mode of
c   decay of 8-Li.
   55 IF (Echrg(5) .LE. 0.0) goto 56
c Program counter to here, deuteron mode encountered.  Get deuteron
c   information counted.
      Nona5=Nona5+1
      En=Echrg(3)
      L=1+IFIX(En)
      IF (L .GT. Sboxes) L=Sboxes
      Dspec(L)=Dspec(L)+1
      N=8
      Amtlt=Amtlt+ETOL(N,En)
c Now finish up the two alphas:
      Goto 54
c Program counter to here means decay to 8-Li, 7-Li or 6-Li.
   56 N=4
      En=Echrg(3)
      C2Li=2.6-0.006*En
      Amtlt=Amtlt+C2Li*ETOL(N,En)
      CountLi=CountLi+1
c Variable C2Li represents very approximate relationship between
c   Li-ion light and carbon-ion light; see Nucl. Instrum. Methods
c   138 (1976) 93 for measurements on NE-102.
      I1=1
      I2=1
      IF (Eneut .GT. 0.0) goto 58
      Nona1=Nona1+1
      Goto 51
   58 IF (En2 .LT. 0.0) Nona3=Nona3+1
```

```
      IF (En2 .GE. 0.0) Nona2=Nona2+1
      Goto 51
c END 8-Li decay.
c
c  NELM=9.  Increment (N,D) reaction
   60 En=Echrg(1)
c First increment deuteron spectrum array --
      L=1+IFIX(En)
      IF (L .GT. Sboxes) L=Sboxes
      Dspec(L)=Dspec(L)+1
c Next get deuteron light --
      N=8
      Amtlt=ETOL(N,En)
c   See Nuclear Instrum. & Methods 138 (1976) 93 for
c   measurements of deuteron light in NE-102.
      En = Echrg(2)
c   Test for escaped deuteron just like proton case, above.
      IF (En .LE. 0.0) goto 62
      Ndlost=Ndlost+1
      Amtlt=Amtlt-ETOL(N,En)
   62 IF (Eneut .GT. 0.0) goto 61
      IF (Echrg(4) .LE. 0.0) goto 59
c Program counter to here had (n,d alpha 7-Li) event.
      Nonda=Nonda+1
      En = Echrg(3)
      N=4
      C2Li=2.6-0.006*En
      Amtlt=Amtlt+C2Li*ETOL(N,En)
      CountLi=CountLi+1
c See comment after statement 56 for Li light.
      I1=3
      I2=3
      Goto 51
   59 Nond=Nond+1
      Goto 68
c
c Check for multibody breakup reactions following (n,dn)
c See Subroutine TENBDK for "signatures" of different reactions.
   61 IF (Echrg(4) .LE. 0.0) goto 66
      IF (Echrg(5) .LE. 0.0) goto 65
c   Next portion for 10-B --> d + 2 alpha breakup.
   63 N=6
      Do 64 I=4,5
      En=Echrg(I)
      L=1+IFIX(En)
      IF (L .GT. Sboxes) L=Sboxes
      Alspec(L)=Alspec(L)+1
   64 Amtlt=Amtlt+ETOL(N,En)
      IF (Nelm .EQ. 7  .AND.  Echrg(3) .LE. 0.0) goto 18
c That gets the contributions from the 2 alphas; now get deuteron
```

```
c   (or triton if Nelm=7 and Echrg(3) = 0) contribution.
      N=8
      En=Echrg(3)
      L=1+IFIX(En)
      IF (L .GT. Sboxes) L=Sboxes
      Dspec(L)=Dspec(L)+1
      Amtlt=Amtlt+ETOL(N,En)
      IF (Nelm .EQ. 7) Nonp2=Nonp2+1
      IF (Nelm .EQ. 9) Nondn2=Nondn2+1
      IF (Nelm .EQ. 11) Nont2=Nont2+1
      Goto 3400
c
c 10-B --> alpha + 6-Li is next.
   65 N=6
      En=Echrg(4)
      L=1+IFIX(En)
      IF (L .GT. Sboxes) L=Sboxes
      Alspec(L)=Alspec(L)+1
      Amtlt=Amtlt+ETOL(N,En)
      En=Echrg(3)
      N=4
      C2Li=2.6-0.006*En
      Amtlt=Amtlt+C2Li*ETOL(N,En)
c See comment above after statement 56 about Li-ion light.
      CountLi=CountLi+1
      IF (Nelm .EQ. 7) goto 14
      IF (Nelm .EQ. 9) Nondn3=Nondn3+1
      IF (Nelm .EQ. 11) Nont3=Nont3+1
      Goto 3400
c
   66 IF (Echrg(5) .LE. 0.0) goto 69
c 10-B --> p + 9-Be is next bit of programming.
   67 N=2
      En=Echrg(5)
      L=1+IFIX(En)
      IF (L .GT. Sboxes) L=Sboxes
      Pspec(L)=Pspec(L)+1
      Amtlt=Amtlt+ETOL(N,En)
      En=Echrg(6)
      IF (En .LE. 0.0) goto 71
      Nprtes=Nprtes+1
      Amtlt=Amtlt-ETOL(N,En)
c Check for  d + 7-Li  reaction following (n,2p2n)
      IF (Nelm.EQ.7 .AND. Echrg(4).LT. 0.0) goto 79
c Not that, so get Be-ion energy and light.
   71 N=4
      En=Echrg(3)
      Amtlt=Amtlt+1.33*ETOL(N,En)
      CountBe=CountBe+1
c See comment for NELM=8 regarding Be light.
```

```
      IF (Nelm .EQ. 7) goto 11
      IF (Nelm .EQ. 9) Nondn1=Nondn1+1
      IF (Nelm .EQ. 11) Nont1=Nont1+1
      Goto 3400
c
c 10-B didn't further breakup for next programming.
   69 Nondn=Nondn+1
   68 En=Echrg(3)
      N=4
      Amtlt=Amtlt+1.2*ETOL(N,En)
      CountB=CountB+1
c  Assume Boron-ion light = 1.2xCarbon-ion light.  It's an assumption
c    which won't matter much unless vastly wrong.
      Goto 3400
c
c  NELM=10.  Photon interaction recorded in the detector.  The amount
c of light was determined in the analysis in Subroutine PHOTON
c and saved in variable Echrg(1).
   70 Nphot=Nphot+1
c      Now check to see if rejecting results when a gamma ray is detected.
      IF (Igflag .EQ. 1) goto 4400
      Amtlt=Echrg(1)
      Goto 3400
c
c  NELM=11.  Triton reaction in detector.  Increment (N,T) counter, etc.
   75 En=Echrg(1)
      L=1+IFIX(En)
      IF (L .GT. Sboxes) L=Sboxes
      Tspec(L)=Tspec(L)+1
      N=8
      Amtlt=0.8*ETOL(N,En)
c Triton light assumed less than deuteron light
c  Check for further 10-B ion breakup.
      IF (Echrg(4) .EQ. 0.0) goto 76
      IF (Echrg(4) .LT. 0.0) goto 79
      IF (Eneut .GT. 0.0) goto 77
   74 IF (Echrg(5) .LE. 0.0) goto 65
      Goto 63
   76 IF (Echrg(5) .GT. 0.0) goto 67
c If program counter gets to here, 10-B didn't break up.
      Nont=Nont+1
      En=Echrg(3)
      N=4
      Amtlt=Amtlt+1.2*ETOL(N,En)
      CountB=CountB+1
      Goto 3400
c Program counter to here, have 10-B --> n + p + 2 alpha breakup.
   77 Nont4 = Nont4 + 1
      N=2
      En=Echrg(5)
```

```
      L=1 + IFIX(En)
      IF (L .GT. Sboxes) L=Sboxes
      Pspec(L)=Pspec(L)+1
      Amtlt=Amtlt+ETOL(N,En)
      En=Echrg(6)
c check for proton escape.
      IF (En .LE. 0.0) goto 78
      Nprtes=Nprtes+1
      Amtlt=Amtlt-ETOL(N,En)
c Now finish up the 2 alphas:
   78 I1=3
      I2=4
      Goto 51
c
c   Next is for  d + 7-Li  breakup of 9-Be.
   79 N=8
      En=-Echrg(4)
c (Recall that in subroutine TENBDK, E(deuteron) was set negative.)
      L=1+IFIX(En)
      IF (L .GT. Sboxes) L=Sboxes
      Dspec(L) = Dspec(1) + 1
      Amtlt=Amtlt+ETOL(N,En)
      En=Echrg(3)
      C2Li=2.6-0.006*En
c (For Li-ion light output see comment after statement 56, above.)
      N=4
      Amtlt=Amtlt + C2Li*ETOL(N,En)
      CountLi=CountLi+1
      IF (Nelm .EQ. 11) Nont5=Nont5+1
      Goto 3400
c
c  NELM=12.  3-He reaction in detector with possible added neutron.
   80 En=Echrg(1)
      N=6
      Amtlt=1.25*ETOL(N,En)
c 3-He light is somewhat greater than alpha light for same E;
c   factor of 1.25 is approximately the difference in 3-He and 4-He
c   light in NE-102 reported by Becchetti, Thorn and Levine in
c   Nuclear Instrum. Methods 138 (1976) 93-104 (to within my ability
c   to read their fig. 5).
      L=1+IFIX(En)
      IF (L .GT. Sboxes) L=Sboxes
      Hspec(L)=Hspec(L)+1
c That increments 3-He spectrum.  Test for multibody breakup reactions.
      IF (Echrg(4) .GT. 0.0) goto 84
      IF (Echrg(2) .GT. 0.0) goto 82
c Program counter to here, not multibody breakup.
c Therefore, get Be-ion light -- 10-Be light same as 9-Be light ...
      En=Echrg(3)
      N=4
```

```
      Amtlt=Amtlt+1.33*ETOL(N,En)
      CountBe=CountBe+1
c   Now test for which counter to increment.
      IF (Eneut .GT. 0.0) goto 88
      Non3He=Non3He+1
      Goto 3400
c
c   Next is multibody breakup reactions following (n,3-He) two-body collision.
c
c Program counter to here, we have 10-Be --> 9-Be --> 8-Be --> 2 alphas.
   82 Nonh1=Nonh1+1
      I1=2
      I2=3
      Goto 51
c Next portion the 9-Be decayed by proton emission to 8-Li
   84 N=2
      En = Echrg(4)
      L=1+IFIX(En)
      IF (L .GT. Sboxes) L=Sboxes
      Pspec(L)=Pspec(L)+1
c    That updates proton spectrum.
      Amtlt=Amtlt+ETOL(N,En)
c   Proton light added -- check for proton escape.
      En=Echrg(2)
      IF (En .LE. 0.0) goto 85
      Nprtes=Nprtes+1
      Amtlt=Amtlt-ETOL(N,En)
   85 En=Echrg(6)
c Test for 8-Li --> 7-Li --> triton + alpha.  If so, Echrg(6) > 0.0
      IF (En .GT. 0.0) goto 87
c Program counter to here, have either 8-Li or 7-Li ion light to get.
c  To determine which test both neutron energies.
      N=4
      En=Echrg(3)
      C2Li=2.6-0.006*En
      Amtlt=Amtlt+C2Li*ETOL(N,En)
      CountLi=CountLi+1
c    (See statement 56 for approximate Li-ion light.)
      IF (En2.LT.0.0 .AND. Eneut.GT.0.0) goto 86
      Nonh2=Nonh2+1
      Goto 3400
   86 Nonh3=Nonh3+1
      Goto 3400
c Next is 7-Li --> triton + alpha situation.
   87 N=8
      Amtlt=Amtlt+0.8*ETOL(N,En)
c    (See statement 75 for approximate triton light.)
      Nonh4=Nonh4+1
      L=1+IFIX(En)
      IF (L .GT. Sboxes) L=Sboxes
```

```
      Tspec(L)=Tspec(L)+1
c That takes care of the triton.  Now finish off with alpha.
      I1=5
      I2=5
      Goto 51
c
c Program counter to statement 88 to get index for (n,3-He n) reaction.
   88 Non3Hen=Non3Hen+1
c
c   Now have light output, unattentuated by scintillator, for the specific
c reaction studied.  Determine attenuation factor for light loss in the
c scintillator, then correct light output for this loss.
 3400 Attenu=-Grho*(Ht-Zint)
      Amtlt=Amtlt*EXP(Attenu)
      FLIGHT = FLIGHT + AMTLT
      IF (Nelm .NE. 10) NTCOL = NTCOL + 1
c That's the total number of collisions (excluding photon interactions).
c
      ELL=EXTERP(Bins,Bno,Amtlt,475,1)
      L=IFIX(ELL)
c    Save info on this scattering in case a deletion is needed due to
c     photon detection and P.S.D. rejection.  (If 30 such saved
c     scatterings take place, terminate event!)
      Lsave(Npsd)=1000*Nelm + L
      Npsd=Npsd+1
      IF (Npsd .GT. 30) Eneut=0.0
c
C  BRANCH ON THE INDICATOR WHICH CONTAINS THE COLLISION-TYPE THAT
C    THE NEUTRON IS TO BE RECORDED AS.  THEN INCREMENT THE
C    APPROPRIATE COUNTERS.  Count Photon interactions, too.
      Goto(230,240,245,250,260,270,280,290,275,300,277,249),NELM
  230 SB1H(L) = SB1H(L) + 1
      Return
  240 SBCNLY(L) = SBCNLY(L) + 1
      Return
  245 SBNNPR(L) = SBNNPR(L) + 1
      Return
  249 S3He(L) = S3He(L) + 1
      Return
  250 SB1AOH(L) = SB1AOH(L) + 1
      Return
  260 SB3AOH(L) = SB3AOH(L) + 1
      Return
  270 SBNP(L) = SBNP(L) + 1
      Return
  275 Sbnd(L) = Sbnd(L) + 1
      Return
  277 Sbnt(L) = Sbnt(L) + 1
      Return
  280 SBNPN(L) = SBNPN(L) + 1
```

```
      Return
  290 SBN2N(L) = SBN2N(L) + 1
      RETURN
  300 Sphot(L) = Sphot(L)+1
      Return
C
c   Next is the "P.S.D." event rejection -- deletion of information already
c stored for this history.  Note that this deletion means that the
c number of originally desired histories will be reduced by one on each
c pass through this portion of the programming.
 4400 Npsd=Npsd-1
      Do 4490 L=1,Npsd
      I=Lsave(L)
      K=I/1000
      M=I-1000*K
      Goto (410,415,420,4490,425,430,4435,4440,4445,4490,4450,460), K
  410 SB1H(M)=SB1H(M)-1
      Goto 4490
  415 SBCNLY(M)=SBCNLY(M)-1
      Goto 4490
  420 SBNNPR(M)=SBNNPR(M)-1
      Goto 4490
  425 SB3AOH(M)=SB3AOH(M)-1
      Goto 4490
  430 SBNP(M)=SBNP(M)-1
      Nprtes=Nprej
      Goto 4490
 4435 SBNPN(M)=SBNPN(M)-1
      Nprtes=Nprej
      Goto 4490
 4440 SBN2N(M)=SBN2N(M)-1
      Goto 4490
 4445 SBND(M)=SBND(M)-1
      Ndlost=Ndrej
      Goto 4490
 4450 Sbnt(M)=Sbnt(M)-1
      Goto 4490
  460 S3He(M)=S3He(M)-1
 4490 Continue
c
      Flight=0.0
      Eneut=0.0
      En2 = 0.0
      Return
C
C
c NEUTRON HISTORY ANALYSIS
C    BANKR3 RECORDS THE LIGHT PRODUCED DURING EACH NEUTRON HISTORY
c
      ENTRY BANKR3
```

```
c
      IF (Flight.LE.0.0) Return
      Ell=EXTERP(Bins,Bno,Flight,475,1)
      L=IFIX(Ell)
C Increment the "Totals" counter.
      Sboxt(L)=Sboxt(L)+1
      Return
C
C
C                    OUTPUT CASE RESULTS
      ENTRY BANKR4
C   CALCULATE THE NUMBER OF COLLISIONS PER COLLIDING NEUTRON.
      FC = NTCOL
      FA=FLOAT(Nfstcl)
      IF (FA .GT. 0.0) COLPN = FC / FA
C   OUTPUT NEUTRON, COLLISION-TYPE, AND LIGHT INFORMATION.
c  Test to see if there were "P.S.D." deletions, and if so,
c    note that information first.
      IF (Nphot .LE. 0) goto 5005
      IF (Igflag .EQ. 1) Write(21,5000) Nphot
 5000 Format(/ 39H  Ne-213 PSD On; No. of photon rejects=,I10)
 5005 WRITE(21,5010) NFSTCL,Ht,NHONCE,NHYD,
     z  (Zsave(I),I=1,10),NCONCE,NCARB,NELAS
      Nna=Nalp+N3alp+Nona1+Nona2+Nona3+Nona4+Nona5
      IF (Nna .LE. 0) goto 5007
      Write(21,5001) NALP,
     a  N3ALP, Nona1, Nona2, Nona3, Nona4, Nona5
c
 5007 Nnp=Nonp+Nonpn+Nonp0+Nonp1+Nonp2n+Nonp2+Nonp5+Non2p
      Nnt=Nont+Nont1+Nont2+Nont3+Nont4
      Nnd=Nond+Nonda+Nondn+Nondn1+Nondn2+Nondn3
      Nn3h=Non3He+Non3Hen+Nonh1
      IF (Nnp+Nnt+Nnd+Nn3h .GE. 1)  goto 5009
      Write (21,5008) Nphot, Nprtes, Ndie, Colpn, Nclsns
 5008 Format(1H0,6x,30HNumber of PHOTON Interactions=, I12/
     a  7x,27HNumber of Escaped PROTONS =, I15/
     c  7x,32HNumber of NEUTRONS below Cutoff=, I10//
     d  41H No. of Collisions per Colliding NEUTRON=,0PF9.4/
     e  24H COLLISION DISTRIBUTION:/7x,2H 0,5x,1H1,5x,1H2,5x,1H3,5x,1H4,
     f  60H     5     6     7     8     9    10    11    12    13    14,
     g  36H    15    16    17    18    19   >19/I9,18I6,2I5/)
      Goto 5019
c
 5009 Write(21,5011) NONP, Nonp0, Nonpn, NONT, Nonp1, Nont1, Nonp2n,
     W Nont2, Nonp3, Nont3, Nonp2, Nont4, Nonp5, Nont5, Non2p,
     X Non2pn, Non3He, Nonp4, Non3Hen, Nonh1
c
      Write(21,5014) NOND, Nonh2, Nonda, Nonh3, Nondn, Nonh4,
     Z Nondn1, Nondn2, Nphot, Nondn3, Nprtes
c
```

```
      Write(21,5012)  NON2N, Ndlost, Non2np, Ndie,
     a   COLPN, NCLSNS
c
 5010 FORMAT (/ 38H NEUTRONS HAVING AT LEAST 1 COLLISION=,I11,6x,
     d  54HHydrogen-Collision Depth Distribution in Steps of 0.1*,
     r  F6.1,3H cm/
     e  38H NEUTRONS HAVING A HYDROGEN COLLISION=,I11,5x,
     E  10HFront Face, 3(6x,3H-->,6x), 9HP.M. Tube /
     f  39H NUMBER OF ELASTIC HYDROGEN COLLISIONS=,I10,I14,9I6/
     1  38H NEUTRONS HAVING ELASTIC C COLLISIONS=,I11/
     2  37H NUMBER OF ELASTIC CARBON COLLISIONS=,I12/
     D  39H NUMBER OF INELASTIC CARBON COLLISIONS=,I10)
 5001 Format(40H NEUTRONS HAVING AN (N,ALPHA) COLLISION=,I9/
     F  43H NEUTRONS HAVING AN (N,N-3ALPHA) COLLISION=,I6/
     f  41H   Neutrons having (N,Alpha P) Reactions=,I8/
     G  42H   Neutrons having (N,Alpha PN) Reactions=,I7/
     h  43H   Neutrons having (N,Alpha P2N) Reactions=,I6/
     I  44H   Neutrons having (N,2Alpha PNT) Reactions=,I5/
     J  45H   Neutrons having (N,2Alpha P2ND) Reactions=,I4)
 5011 FORMAT( 41H NEUTRONS HAVING AN (N,P 12-B) COLLISION=,I8/
     x  41H   Neutrons having (N,P ALPHA) Reactions=,I8/
     a  42H NEUTRONS HAVING AN (N,PN 11-B) COLLISION=,I7, 10x,
     y  40HNEUTRONS HAVING AN (N,T 10-B) COLLISION=,I13/
     A  42H   Neutrons having (N,PN ALPHA) Reactions=,I7,12x,
     z  40HNeutrons Having an (N,TP 9-Be) Reaction=,I11/
     B  39H   Neutrons having an (N,P2N) Reaction=,I10,12x,
     w  42HNeutrons Having an (N,TD 2ALPHA) Reaction=,I9/
     b  43H   Neutrons having (N,P2N ALPHA) Reactions=,I6,12x,
     v  45HNeutrons Having an (N,T ALPHA 6-Li) Reaction=,I6/
     C  43H   Neutrons with (N,PD2N 2ALPHA) Reactions=,I6,12x,
     u  43HNeutrons Having an (N,TPN 2ALPHA) Reaction=,I8/
     y  42H   Neutrons with (N,PNT 2ALPHA) Reactions=,I7,12x,
     Z  41HNeutrons having an (N,TPD 7-Li) Reaction=,I10/
     c  42H   Neutrons having (N,2P 11-Be) Reactions=,I7/
     D  43H   Neutrons having (N,2PN 10-Be) Reactions=,I6,10x,
     e  43HNEUTRONS HAVING AN (N,3-He 10-Be) REACTION=,I10/
     E  43H   Neutrons having (N,2P2N 9-Be) Reactions=,I6,12x,
     f  42HNeutrons having (N,3-He N 9-Be) Reactions=,I9/
     g  61x,45HNeutrons having (N,3-He 2N 2Alpha) Reactions=,I6)
 5014  Format(41H NEUTRONS HAVING AN (N,D 11-B) COLLISION=,I8,12x,
     G  43HNeutrons having (N,3-He NP 8-Li) Reactions=,I8/
     H  41H   Neutrons having (N,D Alpha) Reactions=,I8,12x,
     A  44HNeutrons having (N,3-He 2NP 7-Li) Reactions=,I7/
     f  43H   Neutrons having an (N,DN 10-B) Reaction=,I6,12x,
     B  46HNeutrons having (N,3-He 2NPT Alpha) Reactions=,I5/
     v  42H   Neutrons having (N,DNP 9-Be) Reactions=, I7/
     b  44H   Neutrons having (N,DND 2ALPHA) Reactions=, I5,10x,
     E  30HNumber of PHOTON Interactions=,I12/
     c  42H   Neutrons having (N,DN ALPHA) Reactions=, I7,10x,
     D  27HNumber of Escaped PROTONS =,I15)
```

```
 5012 Format(37H NEUTRONS HAVING AN (N,2N) COLLISION=,I12,
     A  10x, 29HNumber of Escaped DEUTERONS =I13/
     a  40H   Neutrons Having an (N,2NP) Collision=,I9,
     J  10x, 32HNumber of NEUTRONS below Cutoff=,I10//
     K  41H NO. OF COLLISIONS PER COLLIDING NEUTRON=0PF9.4/
     N  24H COLLISION DISTRIBUTION:/7X,2H 0,
     O  4X,2H 1,4X,2H 2,4X,2H 3,4X,2H 4,4X,2H 5,4X,2H 6,4X,2H 7,
     P  4X,2H 8,4X,2H 9,4X,2H10,4X,2H11,4X,2H12,4X,2H13,4X,2H14,
     Q  4X,2H15,4X,2H16,4X,2H17,4X,2H18,3X,2H19,2X,3H>19/
     R  1X,I8,18I6,2I5/)
c
 5019 WRITE(21,5020)
 5020 FORMAT (1H1,5X,11HLIGHT RANGE,3X,5HTOTAL,2X,5HHYDGN,1X,6HC-ELAS,
     A 14H  INEL  n,alfa,5x,10Hn,n3a  n,p,3x,8Hn,d  n,t
     B 3x,4Hn,pX,5x,5HGamma,4x,23HEquivalent Energy (MeV)/52x,
     C 6Hn,3-He,28x,10Hn,2n  Rays,3x,6HProtons5x,5hAlpha4x,6HCarbon)
c
c Suppress print-out of zeroes for largest "light-unit" bins.
      Kwit = Lboxes
      DO  5030  L = 1, LBOXES
      IF ( SBOXT(Kwit)  .NE.  0 )   GO TO 5040
 5030 Kwit=Kwit-1
 5040 Kwit=Kwit+2
      IF (Kwit .GT. Lboxes) Kwit=Lboxes
      Write (22,5045) Kwit,Ntcoll,Esourc,Elow,Temp
 5045 Format (2I10,1P3E10.3)
c
      Linect=1
      Do 5080 L=1,Kwit
c (Added in new code -- equivalent particle energies output)
      Bavg=0.5*(Bins(L) + Bins(L+1))
      M=1
      Plt=ETOL(M,Bavg)
      M=3
      Clt=ETOL(M,Bavg)
      M=5
      Alt=ETOL(M,Bavg)
c (Another addition -- "E" format for small light units)
      IF (Bins(L+1) .GE. 0.0011) goto 5050
      Bsl=Bins(L)*10000.
      Bsm=Bins(L+1)*10000.
      Write(21,5055) Bsl,Bsm,Sboxt(L),Sb1h(L),Sbcnly(L),Sbnnpr(L),
     A  Sb1a0h(L), S3He(L), Sb3a0h(L), Sbnp(L), Sbnd(L), Sbnt(L),
     B  Sbnpn(L), Sbn2n(L), Sphot(L), Plt,Alt,Clt
 5055 Format(F6.1,'E-4 -',F4.1,3HE-4,3I7,2I6,I5,3I6,
     A  I5,I6,2I5,2x,0p2F10.6,F9.5)
      Goto 5062
 5050 WRITE(21,5060) BINS(L),BINS(L+1),SBOXT(L),SB1H(L),
     1 SBCNLY(L),SBNNPR(L), SB1A0H(L), S3He(L), SB3A0H(L),
     2 SBNP(L), Sbnd(L), Sbnt(L), SBNPN(L), SBN2N(L), Sphot(L),
```

```
    3 Plt, Alt, Clt
 5060 FORMAT (F9.4,2H -,F7.4,3I7,2I6,I5,3I6,I5,I6,2I5,0P3F10.4)
 5062 Linect=Linect+1
      IF (Linect .LE. 56) goto 5065
      Write (21,5020)
      Linect=1
 5065 WRITE(22,5070) L,BINS(L),BINS(L+1),SBOXT(L),SB1H(L),
    1 SBCNLY(L),SBNNPR(L), SB1AOH(L), S3He(L),SB3AOH(L), SBNP(L),
    2 Sbnd(L), SBNPN(L), SBN2N(L), Sphot(L)
 5070 FORMAT (I4,1PE11.3,1X,1H-,1X,1PE10.3,5(1X,I5),7I5)
 5080 CONTINUE
      WRITE(21,5095)KWIT
 5095 FORMAT(/'  N(Rows)=',I4)
c
C       INITIALIZE SUMMATION VARIABLES, SUM EACH OF THE COLUMNS
C          FROM THE TOTAL ON,PRINT THE TOTALS AND RETURN.
      SUMA = 0
      SUMB = 0
      SUMC = 0
      SUMCP= 0
      SUMD = 0
      SUME = 0
      SUMF = 0
      SUMG = 0
      SUMH = 0
      SUMJ = 0
      Sumk = 0
      Sumt = 0
      S3HeX =0
c
      XSUM = 0.
      DO  5100  L = 1, KWIT
      SUMA = SUMA+SBOXT(L)
      SUMB = SUMB+SB1H(L)
      SUMC = SUMC + SBCNLY(L)
      SUMCP= SUMCP + SBNNPR(L)
      SUMD = SUMD+SB1AOH(L)
      SUME = SUME+SB3AOH(L)
      SUMF = SUMF + SBNP(L)
      SUMG = SUMG + SBNPN(L)
      SUMH = SUMH + SBN2N(L)
      SUMJ = SUMJ + Sbnd(L)
      Sumt = Sumt + Sbnt(L)
      Sumk = Sumk + Sphot(L)
      S3HeX= S3HeX+ S3He(L)
      XSUM=XSUM+(BINS(L+1)+BINS(L))*0.5*FLOAT(SBOXT(L))
c (Last corrects a small error in original O5S programming)
 5100 CONTINUE
      WRITE(21,5110)SUMA,SUMB,SUMC,SUMCP,SUMD,S3HeX,SUME,SUMF,SUMJ,
     A Sumt,SUMG, SUMH,Sumk
```

```
 5110 FORMAT (15HOSUM OF COLUMNS,3X,3I7,2I6,I5,3I6,I5,I6,2I5)
      IF (Suma.EQ.0) STOP '    Stopped because SUMA = 0 in BANKR4.'
c (That last is just in case --- 12/86)
      XLITE=XSUM/SUMA
      WRITE(21,5115)XLITE
 5115 FORMAT(' AVG LIGHT/INTERACTING NEUTRON=',F10.6)
c
c   Added feature -- output of charged-particle spectra in 1 MeV bins.
 6000 Format(29H1    Charged-particle spectra / 10x, 6HE-Resp, 4x,
     x  6HAlphas, 2x, 9HDeuterons, 3x, 7HProtons, 3x, 7HTritons,
     g  4x,4H3-He)
      Lmax=Sboxes
 6005 Continue
      J=Hspec(Lmax)+Alspec(Lmax)+Dspec(Lmax)+Pspec(Lmax)+Tspec(Lmax)
      IF (J.GT.0) goto 6010
      Lmax=Lmax-1
      IF (Lmax .LE. 0) Return
      Goto 6005
 6010 IF (Lmax .LT. Sboxes) Lmax=Lmax+1
      Suma=0
      Sumb=0
      Sumc=0
      Sumd=0
      Sume=0
      Write (21,6000)
      Do 6020 L=1,Lmax
      K=L-1
      IF (L .EQ. 57) Write(21,6000)
      Write (21,6015) K,L,Alspec(L),Dspec(L),Pspec(L),
     a Tspec(L),Hspec(L)
 6015 Format(I12,2H -,I2,I9,4I10)
      Suma=Suma+Alspec(L)
      Sumb=Sumb+Dspec(L)
      Sumc=Sumc+Pspec(L)
      Sumd=Sumd+Tspec(L)
      Sume=Sume+Hspec(L)
 6020 Continue
      Write(21,6030) Suma,Sumb,Sumc,Sumd,Sume
 6030 Format(13x,5HSums=,I7,4I10)
      Write(21,6040) CountLi,CountBe,CountB
 6040 Format(/10x,'No(Li ions)='I6/10x,'No(Be ions)='I6/
     x  10x,'No(B ions)='I7)
      Return
      END
```

```
C  This is file BETARG.FOR
c This file was also taken from my Monte Carlo code to compute
c   responses in sodium iodide.  However, see comment below
c   for present use.
c
      Function BETARG(N,Z)
C       N=1 FIND RANGE  FOR ENERGY Z (in MeV)
C        =2 FIND ENERGY FOR RANGE Z (in cm)
c
      Common /DENS/ Apb(2)
      Data Nthru/1/, Avoinv/1660.3/
      Data A/-7.139648/,B/2.534449/,C/-.0907533/
c The above constants do well for electron ranges in sodium iodide,
c   for example.  It is known that electron ranges, expressed in
c   mg/cm**2, vary only slightly with the atomic number, Z, of the
c   stopping medium, and so these constants are approximately
c   correct for the C:H material we are dealing with, but not likely
c   correct to the number of decimal places given.  Calculated
c   ranges don't have to be too accurate, however, since the number
c   of electrons per neutron is likely quite small, on the order of
c   a few percent.
c
      IF (Nthru .NE. 1) goto 4
      R=Apb(1)/Apb(2)
      W=12.0+R
      Spgr=W*Avoinv*Apb(2)
c   Spgr should be the material density in mg/cm**3
      Nthru=2
    4 IF (Z.LE.0.) GO TO 1
      GO TO (2,3,1),N
    1 Type 100,N,Z
  100 Format (19H0**Error BETARG, N=I4,6H, ARG=E12.3/)
      BETARG=0.
      Return
    2 Zet=1000.0*Z
      ELN=ALOG(Zet)
      RLN=A+ELN*(B+C*ELN)
      BETARG=EXP(RLN)/SPGR
      Return
    3 SQ=B*B+4.*C*(ALOG(SPGR*Z)-A)
      IF (Sq .GE. 0.0)  goto 14
      Type 10, Z,Sq
   10 Format(//20X,'Problem in -BETARG-   input range='1pe10.3,
     x  ' cm, leading to a negative arg ='e10.3,'.  Set it = 0.0'/)
      Sq=0.0
   14 S=0.5*(SQRT(SQ)-B)/C
      BETARG=0.001*EXP(S)
      Return
      END
```

```
C   This is file CHOOSA.FOR
c
c    Purpose is to choose an alpha energy from a simple formalism
c modestly representing a distribution of the energy of one
c of the alphas (the first in our case) from the 12-C --> 3 alphas
c 3-body breakup reaction.
c
      Function CHOOSA(Emax)
c
c   The formalism used is:   Phi = E**2 * (Emax - E)**2
c
      Common /RANDM/ Irx
      Dimension E(101), S(101)
      Data N/100/, M/101/, Nterp/1/, Eold/0.0/
c
      Em=Emax
      IF (Em .EQ. Eold)  goto 8
      Eold=Em
      D=0.01*Em
      Halfd=0.5*D
      E(1)=0.0
      S(1)=0.0
      Do 5 I=1,N
      Ek=E(I)+Halfd
      E(I+1)=Ek+Halfd
      Sqrtphi=(Em-Ek)*Ek
    5 S(I+1)=S(I) + Sqrtphi*Sqrtphi
      Sx=S(M)
c
    8 R=Sx*Ran(Irx)
      Chosen=EXTERP(S,E,R,M,Nterp)
      CHOOSA=Chosen
      Return
      END
```

```
c   This is file CHOOSL.FOR
c
c Purpose to choose an azimuthal angle, or actually the cosine of the
c   chosen angle, from a distribution described by Legendre polynomial
c   expansion.  The technique is from an old "theorem" in which one
c   computes the maximum value the function can have within the
c   independent variable's domain of interest (in this case from -1
c   to +1) and then compares that to a value of the function for a
c   randomly chosen value of the independent variable.
c
      Function CHOOSL(Fi,N)
c
      Common /RANDM/ Irx
      Dimension P(10),Fi(1)
c There are N (where N .LE. 10, so be careful) coefficients Fi at
c   entry.
c
C Next portion of programming is from O5S code.
      A = 1.
      DO 19 J = 1, N
   19 A = A + FLOAT(J+J+1) * ABS (FI(J))
c In this case -A- is .GE. the maximum value that can be
c obtained from this polynomial expansion, and not just
c equal to the maximum value.
   20 P(1) = 2. * RAN(IRX) - 1.
      P(2) = ( 3. * P(1)**2 - 1. ) / 2.
      NM = N - 1
      FL = 1.
      DO 21 L = 2, NM
      FL = FL + 1.
      P(L+1) = ( P(1) * ( FL + FL + 1. ) * P(L) - FL * P(L-1) ) /
     1  ( FL + 1. )
   21 CONTINUE
      X = 1.
      FL = 0.
      DO 22 L = 1, N
      FL = FL + 1.
      X = X + ( FL + FL +1. ) * FI(L) * P(L)
   22 CONTINUE
      R=RAN(Irx)
      IF ( X .LT. A * R )  GOTO 20
      CHOOSL = P(1)
      Return
      END
```

```
C   This is file CHOOSM.FOR
c
c     Purpose is to choose a neutron energy by random number generation from
c       a Maxwellian distribution of energies given by:
c
c               Phi(En) = SQRT(En) * EXP(-En/T),
c
c       where T is a "temperature".
c
      Function CHOOSM(Enmin,Enmax,Temp)
c
      Common /RANDM/ Irx
      Dimension En(401),Sn(401)
      Data Eold/0.0/, Elow/0.0/, Told/0.0/
c
      N=100
      Elo=Enmin
      T=Temp
      E=Enmax
      IF (E .EQ. Eold  .AND.  T .EQ. Told) goto 8
c Set up new En, Sn arrays only for new value of Enmax and/or Temp
      Told=T
      Eold=E
      Edel=E
      IF (Edel .LE. 10.0) goto 2
      IF (Edel .GT. 20.0*T) Edel=20.0*T
      N=10*IFIX(Edel)
      IF (N .GT. 400) N=400
    2 D=Edel/FLOAT(N)
      En(1)=0.0
      Sn(1)=0.0
      Halfd=0.5*D
      Do 5 I=1,N
      Ek=En(I)+Halfd
      En(I+1)=Ek+Halfd
      Phi=SQRT(Ek)*EXP(-Ek/T)
    5 Sn(I+1)=Sn(I) + Phi
      M=N+1
      Snx=Sn(M)
c
    8 IF (Elo .EQ. Elow) goto 10
      Elow=Elo
      Sny=EXTERP(En,Sn,Elo,M,1)
   10 R=Sny + (Snx-Sny)*RAN(Irx)
      Chosen=EXTERP(Sn,En,R,M,1)
   15 CHOOSM=Chosen
      Return
      End
```

```
C   This is file CHOOSN.FOR
c
c     Purpose is to choose a neutron energy by random number generation from
c a distribution of energies given by:
c
c               Phi(En) = EXP(-En/T) * En**1.5,
c
c        where T is a "temperature".  This functional dependence approximates
c  the relative "continuum" (of) 12-C excitations by neutrons having
c  20 MeV < En < 70 MeV as computed by the Hauser-Feshbach compound-
c  nucleus plus pre-compound formalism in the code TNG.
c
      Function CHOOSN(Enmin,Enmax,Temp)
      Common /RANDM/ Irx
      Dimension En(401),Sn(401)
      Data Eold/0.0/, Elow/0.0/, Told/0.0/
c
      N=100
      Elo=Enmin
      T=Temp
      E=Enmax
      IF (E .EQ. Eold  .AND.  T .EQ. Told) goto 8
c Set up new En, Sn arrays only for new value of Enmax and/or Temp
      Told=T
      Eold=E
      Edel=E
      IF (Edel .LE. 10.0) goto 2
      IF (Edel .GT. 20.0*T) Edel=20.0*T
      N=10*IFIX(Edel)
      IF (N .GT. 400) N=400
    2 D=Edel/FLOAT(N)
      En(1)=0.0
      Sn(1)=0.0
      Halfd=0.5*D
      Do 5 I=1,N
      Ek=En(I)+Halfd
      En(I+1)=Ek+Halfd
      Phi=Ek**1.5 * EXP(-Ek/T)
    5 Sn(I+1)=Sn(I) + Phi
      M=N+1
      Snx=Sn(M)
    8 IF (Elo .EQ. Elow) goto 10
      Elow=Elo
      Sny=EXTERP(En,Sn,Elo,M,1)
   10 R=Sny + (Snx-Sny)*RAN(Irx)
      Chosen=EXTERP(Sn,En,R,M,1)
   15 CHOOSN=Chosen
      Return
      End
```

```
C   This is file CHOOSP.FOR
c
c    Purpose is to choose a proton energy from a simple formalism for the
c       (n,p) and (n,np) reactions.
c    The formulation used is:
c
c       Phi(Eproton) = Eprot*EXP(-Eprot/Temp)*(1.0-EXP(-K*Eprot/B))
c
c    where Temp = "Nuclear Temperature", B=barrier penetration
c    factor , and K=an empirical parameter selected to give the
c    best fit of (1.0-EXP(-K*Eprot/B)) to the barrier penetration
c    probability of 1.5 MeV.  The value for B was deduced to be
c    2.9 MeV for the O5S program, and it appears that the value
c    of K was taken to be 1.5 MeV.  That's why the "B" in the
c    Data statement below was set = (2.9/1.5).  The given
c    functional dependence reproduces adequately the shape of the
c    n + 12-C --> p + 12-B proton continuum (in 12-B) excitation
c    as computed by TNG.
c
      Function CHOOSP(Epmax,Temp)
      Common /RANDM/ Irx
      Dimension Epr(401),Sp(401)
      Data B/1.93333/, Eold/0.0/, Told/0.0/, Nterp/1/
c
      N=100
      E=Epmax
      IF (E .EQ. Eold .AND. Temp .EQ. Told) goto 10
c Set up Epr and Sp arrays for new energy Epmax or Temp
      Told= Temp
      Eold=E
      IF (E .LE. 10.0) goto 2
      N=10*IFIX(E)
      IF (N .GT. 400) N=400
    2 D=E/FLOAT(N)
      Epr(1)=0.0
      Sp(1)=0.0
      Halfd=0.5*D
      Do 5 J=1,N
      Eprj=Epr(J)+Halfd
      Epr(J+1)=Eprj+Halfd
      Phi=Eprj*EXP(-Eprj/Temp) * (1.0 - EXP(-Eprj/B))
      Sp(J+1)=Sp(J)+Phi
    5 Continue
      M=N+1
      Spx=Sp(M)
   10 Rspx=Spx*RAN(Irx)
      Chosen=EXTERP(Sp,Epr,Rspx,M,Nterp)
   15 CHOOSP=Chosen
      Return
      END
```

```
C   This is file CMTRAN.FOR
c
      Subroutine CMTRAN(N1,N2,V, Vcom,E1,E2)
c
      Real*8 B,Bcom,E,Em1,Em2,D1,Etot,G,Gem1,P1
      Common /MASSES/ Emass(19)
      Data D1/1.0D+0/, C/2.997925E+10/
c
      Em1=Emass(N1)
      Em2=Emass(N2)
c
c Let particle of mass Em1 approach particle of mass Em2 with
c  velocity V.  Particle of mass Em2 is at rest.  Then compute
c  velocity of the center of mass of the Em1-Em2 system with respect
c  to the mass-Em2-at-rest system, and compute the relativistic
c  kinetic energies, E1 and E2, of the two particles (respectively)
c  in the center-of-mass system.
c
      Beta=V/C
      B=Beta
      G=D1/DSQRT(D1-B*B)
      Gem1=G*Em1
      Etot=Gem1+Em2
      P1=Gem1*B
      Bcom=P1/Etot
      Beta=Bcom
      Vcom=Beta*C
      G=D1/DSQRT(D1-Bcom*Bcom)
      E=G*Em2 - Em2
      E2=E
      E=G*(Gem1 - Bcom*P1) - Em1
      E1=E
      Return
      END
```

```
C   This is file COMDCS.FOR
c
c   The following routine was taken from my Monte Carlo code to compute
c responses of photons by NaI (or BaF2) scintillation detectors.
c
      Subroutine COMDCS(Egam,Ebeta)
c
C  GIVEN VECTOR R IN DETECTOR COORDINATES FROM X0,Y0,Z0                COMDC 02
C     TO X,Y,Z, AND ENERGY OF COMPTON SCATTERED BETA,                  COMDC 03
C     COMPUTE POLAR SCATTERING ANGLES FOR BETA AND                     COMDC 04
C     SCATTERED GAMMA, CHOOSE AZIMUTHAL ANGLE BY                       COMDC 05
C     MONTE CARLO, THEN COMPUTE DIRECTION COSINES FOR                  COMDC 06
C     BETA AND GAMMA IN DETECTOR COORDINATES.                          COMDC 07
c
      Real*8 Dr,Dx,Dy,Dz
      COMMON /SPOT/ X,Y,Z,X0,Y0,Z0                                     COMDC 08
      COMMON /CBET/ XB,YB,ZB,XG,YG,ZG                                  COMDC 09
      Common /RANDM/ Ixx
c
      DATA EMCSQ/0.511/, PI/3.14159/
      EG=EGAM                                                          COMDC 11
      EB=EBETA                                                         COMDC 12
      A=EG/EMCSQ                                                       COMDC 13
      A2=(1.+A)**2
      A3=2.*A*EG/EB-1.-2.*A                                            COMDC 15
      TPB=ATAN (SQRT(A3/A2))                                           COMDC 16
      IF (TPB.LT.0.) TPB=TPB+PI                                        COMDC 17
      TPG=ACOS(1.-2./(1.+A3))
      IF (TPG.LT.0.) TPG=TPG+PI                                        COMDC 19
      PPB=2.*PI*RAN(Ixx)                                               COMDC 20
C         TPB and PPB are the polar and azimuthal angles of the scattered
C           electron with respect to the z-axis defined by the direction of
C           incident photon.
      DX=X-X0                                                          COMDC 21
      DY=Y-Y0                                                          COMDC 22
      DZ=Z-Z0                                                          COMDC 23
      DR=DSQRT(DX*DX+DY*DY+DZ*DZ)                                      COMDC 24
      R=Dr
      TR=ACOS(DZ/R)                                                    COMDC 25
      IF (TR.LT.0.) TR=TR+PI                                           COMDC 26
      IF (ABS(DX)  .GT. .001*ABS(DY)) GO TO 1                          COMD 26A
      PR=0.5*PI                                                        COMD 26B
      GO TO 2                                                          COMD 26C
    1 PR=ATAN(DY/DX)                                                   COMDC 27
      IF (PR.LT.0.) PR=PR+PI                                           COMDC 28
    2 IF (DY.LT.0.) PR=PR+PI                                           COMDC 29
c
C      TR and PR are the polar and azimuthal angles of the vector
C        representing the direction of the incident photon with respect
C        to the detector coordinate axis.
```

```
C      What follows is the transformation to get the vector representing
C        the direction of the scattered electron also into the detector
C        coordinate systems.  Its direction cosines are then determined.
c
      ERI=SIN (TR)*COS (PR)                                             COMDC 30
      ERJ=SIN (TR)*SIN (PR)                                             COMDC 31
      ERK=COS (TR)                                                      COMDC 32
      EPI=-SIN (PR)                                                     COMDC 33
      EPJ=COS (PR)                                                      COMDC 34
      ETI=COS (PR)*COS (TR)                                             COMDC 35
      ETJ=SIN (PR)*COS (TR)                                             COMDC 36
      ETK=-SIN (TR)                                                     COMDC 37
      XB=ERI*COS (TPB)+SIN (TPB)*(EPI*SIN (PPB)+ETI*COS (PPB))          COMDC 38
      YB=ERJ*COS (TPB)+SIN (TPB)*(EPJ*SIN (PPB)+ETJ*COS (PPB))          COMDC 39
      ZB=ERK*COS (TPB)+SIN (TPB)*ETK*COS (PPB)                          COMDC 40
C       And that is it for the electron.  Now do the scattered photon vector.
c
      PPG=PPB-PI                                                        COMDC 41
      XG=ERI*COS (TPG)+SIN (TPG)*(EPI*SIN (PPG)+ETI*COS (PPG))          COMDC 42
      YG=ERJ*COS (TPG)+SIN (TPG)*(EPJ*SIN (PPG)+ETJ*COS (PPG))          COMDC 43
      ZG=ERK*COS (TPG)+SIN (TPG)*ETK*COS (PPG)                          COMDC 44
      RETURN
      END
```

```
C  This is file COMPSIG.FOR
c
      Function COMPSIG(Egamma)
c
c Purpose is to return a photon scattering cross section in cm**-1
c
      Common /DENS/ Apb(2)
      Dimension Eg(25),SigH(25),SigC(25)
c
      Data Eg/0.015, 0.02, 0.03, 0.04, 0.05, 0.06, 0.08, 0.1, 0.15,
     x 0.2, 0.3, 0.4, 0.5, 0.6, 0.8, 1.0, 1.5, 2.0, 3.0, 4.0, 5.0,
     y 6.0, 8.0, 10.0, 15.0/
c Next arrays are photon scattering cross sections in barns/atom
      Data SigH/0.609, 0.606, 0.592, 0.576, 0.559, 0.544, 0.516, 0.492,
     w 0.443, 0.406, 0.353, 0.317, 0.289, 0.267, 0.235, 0.211, 0.172,
     x 0.146, 0.115, 0.0962, 0.0831, 0.0734, 0.0601, 0.0511, 0.0379/
      Data SigC/13.6, 7.33, 4.4, 3.72, 3.45, 3.3, 3.09, 2.94, 2.66,
     y 2.43, 2.12, 1.9, 1.73, 1.6, 1.41, 1.27, 1.03, 0.88, 0.71, 0.61,
     z 0.54, 0.49, 0.42, 0.38, 0.33/
      Data N/25/, Nterp/4/
c
      E=Egamma
      Hsig=EXTERP(Eg,SigH,E,N,Nterp)
      Csig=EXTERP(Eg,SigC,E,N,Nterp)
      C=Hsig*Apb(1) + Csig*Apb(2)
      Compsig=C
      Return
      END
```

```
C   This is file COMPTN.FOR
c
      Subroutine COMPTN(Egamma,Ebeta)
C      Routine to obtain electron energy, Ebeta, for an input photon
c        energy, Egamma.  Energies are in MeV.
      Common /RANDM/ Ixx
      Dimension S(100), E(100)
      Data EMCSQ/0.511/, Eold/0.0/, Ndat/100/, Nterp/1/
c
      IF (Egamma .EQ. Eold) goto 2
      Eold=Egamma
      Eg=Egamma
      Alpha=Eg/EMCSQ
      Alphsq=Alpha*Alpha
      Emax=Eg*2.*Alpha/(1.0+2.0*Alpha)
      Edel=Emax/FLOAT(Ndat)
      Halfd=0.5*Edel
      E(1)=0.0
      S(1)=0.0
      DO 1 I=2,Ndat
      Ek=E(I-1)+Halfd
      DE=Eg-Ek
      TODT=Ek/DE
      SIG=(2.+TODT*(TODT/ALPHSQ+Ek/EG-2./ALPHA))/ALPHSQ
      S(I)=S(I-1)+Sig
      E(I)=Ek+Halfd
    1 Continue
      Sum=S(Ndat)
c
    2 W=Sum*RAN(Ixx)
      Ebeta=EXTERP(S,E,W,Ndat,Nterp)
      Return
      END
```

```
C   This is file CSCAT.FOR
c
      Subroutine CSCAT
c
c         Finish up  n + 12-C  elastic and inelastic scattering.
c
      Common /CSCATT/ Xp,Yp,Zp, Vnca,Vcca,Vcom
      Common /VECTOR/ Xpn,Ypn,Zpn, Xn,Yn,Zn
      Common /COLLIS/ Nelm,Echrg(6)
      Common /NEUTRN/ Eneut,U,V,W,X,Y,Z
c
      Data Kn/1/, K12C/7/
c
c Get neutron velocity components in "neutron" center-of-mass
c   coordinate system:
      Vnx=Xp*Vnca
      Vny=Yp*Vnca
      Vnz=Zp*Vnca
c Get, similarly, carbon-ion velocity components:
      Vcx=-Xp*Vcca
      Vcy=-Yp*Vcca
      Vcz=-Zp*Vcca
c
c Transform neutron velocity components from "neutron" center-of-mass
c   coordinate system to "neutron" laboratory coordinate system:
      CALL LABTRAN(Vnx,Vny,Vnz, Vcom, Vx,Vy,Vz)
c Now get V(neutron) and E(neutron).  V(neutron) has the same value
c   in "neutron" lab. coordinates as in "detector" lab. coordinates.
      Vneut=SQRT(Vx*Vx + Vy*Vy + Vz*Vz)
      Eneut=EFROMV(Kn,Vneut)
      CALL DIRCOS(Vx,Vy,Vz, Xpn,Ypn,Zpn)
c Xpn,Ypn and Zpn are neutron's dir. cosines in "neutron" lab. coords.
c Rotate neutron's dir. cosines into "detector" lab. coordinates
      CALL TRANSVEC(U,V,W)
      U=Xn
      V=Yn
      W=Zn
c    and the information is saved in common block labelled NEUTRN.
c Now get information on the Carbon ion:
      CALL LABTRAN(Vcx,Vcy,Vcz, Vcom, Vx,Vy,Vz)
      Vcarb=SQRT(Vx*Vx + Vy*Vy + Vz*Vz)
      Ecarb=EFROMV(K12C,Vcarb)
      Echrg(1)=Ecarb
c All Done!
      Return
      END
```

```
c    This is file DIRCOS.FOR
c
c      Purpose is to return with direction cosines, C1,C2,C3, for input
c velocities V1,V2,V3.
c
      SUBROUTINE DIRCOS(V1,V2,V3, C1,C2,C3)
c
      Real*8 C,Csq,X,Y,Z
      Vsq=V1*V1 + V2*V2 + V3*V3
      V=SQRT(Vsq)
    1 C1=V1/V
      C2=V2/V
      C3=V3/V
      X=C1
      Y=C2
      Z=C3
      Csq=X*X + Y*Y + Z*Z
      IF (Csq .LE. 1.0D+0) Return
      C=DSQRT(Csq)
      CC=C
      IF (CC .LT. 1.00001) CC=1.00001
      C1=C1/CC
      C2=C2/CC
      C3=C3/CC
      Return
      END
```

```
c   This is File DOMEGA.FOR
c Provide Initial Information for Monte-Carlo
c       Response Routine for Cylindrical Detector.
c
c Right-Circular Cylinder of radius RAD and length HT.
c
c Purposes: (a) Deduce subtended solid angle; and
c           (b) Determine and record coordinates and direction
c         cosines of initial interactions in the detector
c         for NHIST events.
c
        FUNCTION DOMEGA(NHIST)
        Double Precision Rdp,Dsdp,Dsdpp,D1,Xsdp,Fdp
        Common /TRY/  TRIES(8,100000)
        Common /NAID/  RAD,HT,RCOLIM,R
        Common /INIT/ Nhitot
        Common /RANDM/  IXX
        Data Pi/3.1415927/
        Data Nmax/100000/, D1/1.0D+0/
c
c  Steps in calculation are as follows:
c
c  1.  Determine a comparatively small solid angle which completely encloses
c      the detector as observed by the source.  This is the TRIAL solid angle.
c  2.  By random choice, obtain some fraction of the overall TRIAL solid angle.
c      (The source is assumed to radiate isotropically into this solid angle.)
c  3.  Pick a direction (vector) by random number.
c  4.  Test to see if this vector from the source intercepts some place
c      on the detector surface that is "seen" by the source.
c      a.  If it does, record the coordinates of this spot and deduce and
c          record the direction cosines of the vector from the source spot.
c          Keep this information in the  TRIES(I,J)  array.
c      b.  If it doesn't, try again.  Keep track of total number of attempts.
c      c.  If it does, then see if there was an interaction.
c      d.  If no interaction, try again.
c  5.  Keep choosing until the total number of interactions equals the
c      initially desired number of histories.
c  6.  The solid angle subtended by the detector is the number of hits
c      divided by the total number of attempts times the  TRIAL  solid angle.
c  7.  At exit the  TRIES(I,J)  array has information on the position in the
c      detector for the initial NHIST interactions in the detector.
c
c   TRIES(1,J) = X Coordinate
c   TRIES(2,J) = Y Coordinate
c   TRIES(3,J) = Z Coordinate
c   TRIES(4,J) = X Direction Cosine
c   TRIES(5,J) = Y Direction Cosine
c   TRIES(6,J) = Z Direction Cosine
c   TRIES(7,J) = Energy of the interacting neutron
c   TRIES(8,J) = Index of the type of interaction
```

```
c
c  The Cartesian coordinate system has its origin at the center of the front
c      face of the detector such that the positive Z axis is into the
c      detector along the cylindrical symmetry axis.  The back surface of the
c      detector is at Z = +HT.  The Front Face of the detector is in the X-Y
c      plane.
c
c      If the position of the source is offset from the Z axis, the
c      offset is taken as along the positive X axis, i.e., Y=0 by symmetry.
c
       Zstart=Tries(3,1)
       Xstart= SQRT(Tries(1,1)**2 + Tries(2,1)**2)
c
       Ntries=Nhist
       IF (Ntries. GT. Nmax)  Ntries=Nmax
       Ncontl=1
    3 IF (Zstart) 4,10,20
c
c   If ZSTART < 0.0 then the front face of the detector is illuminated.
c
    4 IF (Xstart .GT. Rad)  go to 40
c
c      If the Offset of the Source is > detector radius, then the cylindrical
c         surface of the detector is illuminated.  However, if a collimator
c   is designated, the collimator is assumed to cover all of the
c   cylindrical surface and perhaps also some of the front face of the
c   detector.  For ease in computation the collimator is taken to be
c   infinitely thin and totally absorbing.
c
c  Geometry of calculation in the next portions of the program:
c
CCCCCCCCC  FRONT FACE    FRONT FACE    FRONT FACE    FRONT FACE  CCCCCCCCC
C                                                                        C
C                        DETECTOR.DETECTOR.DETECTOR.DETECTOR.D           C
C                        F                                   D           C
C   SOURCE               R                                   D           C
C     :                  O                                   D           C
C     :                  N                                   D           C
C     --------------------T - - - - - - - - - - - - - - - - - D---> +Z    C
C                        F                                   D           C
C                        A                                   D           C
C                        C                                   D           C
C                        E                                   D           C
C                        DETECTOR.DETECTOR.DETECTOR.DETECTOR.D           C
C                                                                        C
C     I<------ DS -------->I<----------------- HT ------------>I          C
C                                                                        C
CCCCCCCCC  FRONT FACE    FRONT FACE    FRONT FACE    FRONT FACE  CCCCCCCCC
c
    2 Ds=-Zstart
```

```
      R=Rad
      IF (Rcolim.LT.Rad .AND. Rcolim.GT.0.0)  R=Rcolim
    1 Rdp=R
c Selective double-precision arithmetic here
      Dsdp=Ds
      Dsdpp=Ds
      Xsdp=Xstart
      Fdp=D1-Dsdp/DSQRT(Dsdp*Dsdp + (Rdp+Xsdp)**2)
      F=Fdp
      Dom=2.0*Pi*F
c               Solid angle = 2*Pi*(1-COS(ATAN(Rad/Distance)))
      Domrr=Dom
      Domss=0.0
      Chimax=Pi
      IF (Xstart .LE. R) go to 9
      Fdp=D1-Dsdp/DSQRT(Dsdp*Dsdp + (Xsdp-Rdp)**2)
      F=Fdp
      Domss=2.*Pi*F
       Domrr=Dom-Domss
      Chimax=ASIN(R/Xstart)
              Dom=Domrr*Chimax/Pi
    9 IF (Ncontl .NE. 1)  go to 41
      Ntot=1
      Nhit=1
      Ncol=1
    5 Dwp=0.5*Domrr*RAN(IXX)/Pi
      Dwp=Dwp+0.5*Domss/Pi
      Fdp=Dwp
c Selective double precisions here, too
      Rdp=Dsdpp*DSQRT(D1/(D1-Fdp)**2 - D1)
      Rprime=Rdp
      Phi=2.*Chimax*(0.5-RAN(Ixx)) + Pi
      Yp=Rprime*SIN(Phi)
      IF (ABS(Yp) .GT. R)  go to 6
      Xp=Rprime*COS(Phi)
      Xd=Xp+Xstart
      Rd=SQRT(Yp*Yp + Xd*Xd)
      IF (Rd .GT. R)  go to 6
      H=SQRT(Ds*Ds + Rprime*Rprime)
      Az=Ds/H
      Sinz=SQRT(1.-Az*Az)
      Tries(1,Ncol)=Xd
      Tries(2,Ncol)=Yp
      Tries(3,Ncol)=0.0
      Tries(4,Ncol)=Sinz*COS(Phi)
      Tries(5,Ncol)=Sinz*SIN(Phi)
      Tries(6,Ncol)=Az
    8 IF (Ncontl .NE. 1) go to 49
      Nhit=Nhit+1
      Call INTERACT(Ncol,Nindx)
```

```
      IF (Nindx .LE. 0) goto 6
      Ncol=Ncol+1
      If (Ncol.GT.Ntries) go to 37
    6 Ntot=Ntot+1
      Go to 5
c
c     If the program goes to the next statement it's because the initially-
c      chosen Z=0 puts the source on the plane of the face of the detector.
c
   10 IF (Xstart .GT. Rad)  go to 30
c
c     If XSTART is smaller than RAD then the source is ON the front face of
c        the detector.  Need only to choose initial direction cosines.  In
c        this case if the Z-Direction Cosine is chosen negative, can simply
c        reverse direction by 180 degrees with no loss of randomness.
c
      Ntot=1
      Ncol=1
      Nhit=1
   11 CALL RVECT(Ax,Ay,Az)
      IF (Az)  12,15,13
   12 Tries(4,Ncol)=-Ax
      Tries(5,Ncol)=-Ay
      Tries(6,Ncol)=-Az
      Go to 14
   13 Tries(4,Ncol)=Ax
      Tries(5,Ncol)=Ay
      Tries(6,Ncol)=Az
   14 Tries(1,Ncol)=Xstart
      Tries(2,Ncol)=0.0
      Tries(3,Ncol)=0.0
      Nhit=Nhit+1
      Call INTERACT(Ncol,Nindx)
      IF (Nindx .LE. 0) goto 15
      Ncol=Ncol+1
      IF (Ncol .GT. Ntries) go to 16
   15 Ntot=Ntot+1
      Go to 11
   16 Domega=2.*Pi*FLOAT(Ntries)/FLOAT(Ntot)
   18 Nhitot=Nhit
      RETURN
c
c  Next is for ZSTART > 0.0, i.e. curved side of the detector is "seen."
c
   20 IF (Zstart .LT. Ht)  go to 21
c
c     If Program goes to here then the source is "behind" the detector.
c        In this case, reverse the coordinates to put the source in front
c        of the detector -- i.e. ignore P.M. tube and environs.
c
```

```
      Zstart=Ht-Zstart
      Go to 3
c
   21 IF (Xstart-Rad)  22,23,30
c
c     >>>>>>  IF  XSTART  is smaller than RAD ----
c                then the source is "inside" the detector, and that
c                situation is typed out before continuing.
   22 Type 99, Xstart, Zstart, Rad
   99 Format(/'  ****  Source Inside Detector'/10x,
 x 'X-START, Z-START, RADIUS ='1P3E10.3)
      Type 98
   98 Format(4x,'If Okay Type 1, Else 0'/3H ? )
      Accept 97, Nokay
   97 Format(I1)
      IF (Nokay .NE. 1) STOP 'Fix INPUT.DATA File.'
      Write (21,99) Xstart,Zstart,Rad
      Domega=4.*Pi
      Nhit=1
   96 Tries(1,Ncol)=Xstart
      Tries(2,Ncol)=0.0
      Tries(3,Ncol)=Zstart
      Call RVECT(Ax,Ay,Az)
      Tries(4,Ncol)=Ax
      Tries(5,Ncol)=Ay
      Tries(6,Ncol)=Az
      Nhit=Nhit+1
      Call INTERACT(Ncol,Nindx)
      IF (Nindx .LE. 0) goto 28
      Ncol=Ncol+1
      IF (Ncol .GT. Ntries) goto 18
      Go to 96
cc
c     If XSTART = RADius  then the source is on the curved (cylindrical)
c   surface of the detector.  See Comment following STATEMENT
c   labelled 10, above, only now  AX  must be negative.
c
   23 Ntot=1
      Ncol=1
      Nhit=1
   25 Call RVECT(Ax,Ay,Az)
      IF (Ax) 26,28,24
   24 Tries(4,Ncol)=-Ax
      Tries(5,Ncol)=-Ay
      Tries(6,Ncol)=-Az
      Go to 27
   26 Tries(4,Ncol)=Ax
      Tries(5,Ncol)=Ay
      Tries(6,Ncol)=Az
   27 Tries(1,Ncol)=Xstart
```

```
      Tries(2,Ncol)=0.0
      Tries(3,Ncol)=Zstart
      Nhit=Nhit+1
      Call INTERACT(Ncol,Nindx)
      IF (Nindx .LE. 0) goto 28
      Ncol=Ncol+1
      IF (Ncol .GT. Ntries) go to 16
   28 Ntot=Ntot+1
      Go to 25
cc
cc
c  Next is source "seeing" curved (cylindrical) surface of the detector.
c    Example of geometry for side entry follows:
c
CCCCCCCCC  SIDE ENTRY    SIDE ENTRY    SIDE ENTRY    SIDE ENTRY  CCCCCCCCC
C                                                                         C
C            SOURCE                                                       C
C              :                                                          C
C              :                                                          C
C              :                                                          C
C              :                                                          C
C              :                                                          C
C              :                                                          C
C              :                                                          C
C              :                                                          C
C         DETECTOR.DETECTOR.DETECTOR.DETECTOR.DETECTOR.D                  C
C         D                                           D                   C
C         D                                           D                   C
C         D                                           D                   C
C         D                                           D                   C
C     --- * ---------------------------------------   D ---> +Z AXIS      C
C         D                                           D                   C
C         D                                           D                   C
C         D                                           D                   C
C         D                                           D                   C
C         DETECTOR.DETECTOR.DETECTOR.DETECTOR.DETECTOR.D                  C
C                                                                         C
CCCCCCCCC  SIDE ENTRY    SIDE ENTRY    SIDE ENTRY    SIDE ENTRY  CCCCCCCCC
c
c
   30 R1=Ht-Zstart
      IF (R1 .LT. Zstart)  R1=Zstart
      Dss=Xstart-Rad
      Thet=ASIN(Rad/Xstart)
      Ymax=Dss*TAN(Thet)
      Rss=SQRT(R1*R1 + Ymax*Ymax)
c   Selective double-precision arithmetic, again.
      Rdp=Rss
      Dsdp=Dss
      Fdp=D1-Dsdp/DSQRT(Dsdp*Dsdp + Rdp*Rdp)
```

```
      F=Fdp
      Dom =2.*Pi*F
      Domr=Dom
      Dom2=0.0
      Phimax=Pi
      IF (Zstart .GE. 0.0) goto 34
c    Again double-precision arithmetic
      Rdp=Zstart
      Dsdp=Xstart
      Fdp=D1-Dsdp/DSQRT(Dsdp*Dsdp + Rdp*Rdp)
      F=Fdp
      Doms=2.*Pi*F
      Domr=Dom-Doms
      Phimax=ATAN(-Rad/Zstart)
      Dom=Domr*Phimax/Pi
34      IF (Ncontl .NE. 1) go to 42
      Ntot=1
      Ncol=1
      Nhit=1
31    Dwp=0.5*Domr*RAN(IXX)/Pi
      Dwp=Dwp+0.5*Doms/Pi
      Rprime=Dss*SQRT(1./(1.-Dwp)**2 -1.)
      Phi=2.*Phimax*(0.5-RAN(Ixx))
      Zbar=Rprime*COS(Phi)
      Zp=Zbar+Zstart
      IF (Zp.LT.0.0) go to 33
      IF (Zp.GT. Ht) go to 33
      Yp=Rprime*SIN(Phi)
      IF (ABS(Yp) .GT. Ymax)  go to 33
      IF (ABS(Yp) .GT. 0.02*Rad)  go to 35
c
c  If program goes to here, entry is close enough to the X axis to
c      take Y=0 for the starting point of entry.
c
      Tries(1,Ncol)=Rad
      Tries(2,Ncol)=0.0
      Tries(3,Ncol)=Zp
      Tries(5,Ncol)=0.0
      V=SQRT(Dss*Dss + Rprime*Rprime)
32    Tries(4,Ncol)=-Dss/V
      Tries(6,Ncol)=Zbar/V
      IF (Ncontl .NE. 1) go to 46
      Nhit=Nhit+1
      Call INTERACT(Ncol,Nindx)
      IF (Nindx .LE. 0) goto 33
      Ncol=Ncol+1
      IF (Ncol .GT. Ntries) go to 37
33    Ntot=Ntot+1
      Go to 31
37    Domega=Dom*FLOAT(Nhit-1)/FLOAT(Ntot)
```

```
      Nhitot=Nhit
      RETURN
c
   35 Thetpr=ATAN(Yp/Dss)
      Alph=ASIN((Xstart*SIN(Thetpr))/Rad)
      Beta=Alph-Thetpr
      Xs=Rad*COS(Beta)
      Xd=Xstart-Xs
      Ys=Yp*Xd/Dss
      Zs=Zstart+Zbar*Xd/Dss
      IF (Zs .GE. Ht)  go to 33
      IF (Zs .LT.0.0)  go to 33
      Tries(1,Ncol)=Xs
      Tries(2,Ncol)=Ys
      Tries(3,Ncol)=Zs
      V=SQRT(Dss*Dss + Yp*Yp + Zbar*Zbar)
      Tries(5,Ncol)=Yp/V
      Go to 32
c
c  For what follows the source is at a position to illuminate
c    the front face of the detector as well as the cylindrical
c    side.  First check to see if there is a collimator.  If
c    there is, assume that the collimator is centered on the
c    Z axis shielding the cylindrical side and perhaps some of
c    the front face.
c
   40 IF (Rcolim .GT. 0.0  .AND.  Rcolim .LE. Rad)  go to 2
c
c  Now to the most general case -- can illuminate the front face
c     AND the cylindrical side.  We will do a different trick here.
c     Instead of trying to deduce an all-encompassing  TRIAL  solid
c     angle, we will get One  TRIAL  solid angle for the detector face
c     and Another for the cylindrical surface using the algebra
c     already in place, above.  Then, for the first "Hit" we choose
c     between the two cases by random number on the basis of the
c     relative sizes of the two  TRIAL  solid angles.  We then strobe
c     whichever is chosen until a "Hit" is registered, keeping track
c     of the total number of tries taken.  Then we do an immediate
c     adjustment of the  TRIAL  solid angle for that case to get
c     a "Running" Value of the solid angle for that case.  This
c     "Running" solid angle will be the one compared with the  TRIAL
c     solid angle of the case that wasn't run to determine which case
c     will get the second "Hit" case.  The idea is that after a few
c     "Hits" the "Running" solid angles will approximate the actual
c     solid angles for each case well enough such that choosing which
c     case to study by random number will represent the actual
c     situation.
      Ncontl=2
      Go to 2
c
```

```
   41   Domft=Dom
c     That's the  TRIAL  solid angle for the face,
       go to 30
c
   42   Domst=Dom
c     and that's it for the cylindrical side.
c
        Ncol=1
        Nhitf=0
        Nhits=0
        Ntotf=0
        Ntots=0
        Domfr=Domft
        Domsr=Domst
c     DOMFR and DOMSR are the "Running" solid angles
   44   Nhit=Nhitf+Nhits+1
        IF (Nhitf .LE. 0)  go to 45
        Domfr=Domft*FLOAT(Nhitf)/FLOAT(Ntotf)
   45   IF (Nhits .LE. 0)  go to 47
        Domsr=Domst*FLOAT(Nhits)/FLOAT(Ntots)
   47   Ratio =Domfr/(Domfr+Domsr)
        U=RAN(IXX)
        IF (U .LE. Ratio) go to 48
c
c    "Go to 48" means Go To "Face" of the Detector
c    Else GO TO "Side" of the detector, which follows immediately
        Ntot=Ntots
        Dom=Domst
        Go to 31
   46   Ntots=Ntot+1
        Nhits=Nhits+1
        Go to 50
c
   48   Dom=Domft
        Ntot=Ntotf
        Go to 5
   49   Ntotf=Ntot+1
        Nhitf=Nhitf+1
   50   Call INTERACT(Ncol,Nindx)
        IF (Nindx .LE. 0) goto 44
        Ncol=Ncol+1
        IF (Ncol .LE. Ntries) goto 44
        Domega=Domfr+Domsr
        Nhitot=Nhit
Return
END
```

```
C   This is file DPLI7.FOR
c
      Subroutine DPLI7(Excit,V9Be)
c
c            Does energetics for  9-Be --> d + 7-Li
c
      Common /COLLIS/  Nelm, Echrg(6)
      Data  Kd/10/, K7Li/17/, Dp7Li/16.6965/
c
      Ta=Excit- Dp7Li
      Ed=RCKE(Kd,K7Li,Ta)
      CALL RVECT(Xd,Yd,Zd)
      Vdc=VELOCITY(Kd,Ed)
      Vdx=Xd*Vdc
      Vdy=Yd*Vdc
      Vdz=Zd*Vdc
      CALL LABTRAN(Vdx,Vdy,Vdz, V9Be, Vx,Vy,Vz)
      Vd=SQRT(Vx*Vx + Vy*Vy + Vz*Vz)
      Echrg(4) = -EFROMV(Kd,Vd)
c       Negative value of E(deuteron) to alert Subroutine BANKER.
      E7Li=Ta-Ed
      V7c=VELOCITY(K7Li,E7Li)
      V7x=-Xd*V7c
      V7y=-Yd*V7c
      V7z=-Zd*V7c
      CALL LABTRAN(V7x,V7y,V7z, V9Be, Vx,Vy,Vz)
      V7=SQRT(Vx*Vx + Vy*Vy + Vz*Vz)
      Echrg(3)=EFROMV(K7Li,V7)
c       That gets the 7-Li ion energy.
      Return
      END
```

```
C   This is file EFROMV.FOR
c
      Function EFROMV(N,V)
c Purpose is to compute particle energy (in MeV) from input velocity V
c  (in cm/sec)
c N = same as in function VELOCITY
c
      Real*8 B,G,D1
      Common /MASSES/ Emass(19)
      Data D1/1.0D+0/,C/2.997925E+10/
c
      E=0.0
      IF (N.GE.1 .AND. N.LE.19) goto 1
      Type 4, N,V
    4 Format(/'  *** Error in Function EFROMV; N,V = 'I12,1PE10.3/)
      Goto 7
    1 M=N
      Beta=V/C
      B=Beta
      G=D1/DSQRT(D1 - B*B)
      G=G-D1
      Gc=G
      E=Emass(M)*Gc
    7 Efromv=E
      Return
      End
```

```
C   This is file ELI8DK.FOR
c
      Subroutine ELI8DK(Ex,V8Li,Eg)
c
c Particle decay of highly excited 8-Li ion.
c
c Decay modes considered in this subroutine are:
c         (a)   8-Li --> n + 7-Li; then,
c         (b)   7-Li --> gamma + 7-Li (ground state);
c      or (b')  7-Li --> triton + alpha;
c      or (b")  7-Li --> n + 6-Li; then,
c         (c")  6-Li --> gamma + 6-Li (ground state);
c      or (c'") 6-Li --> d + alpha.
      Real*4 Li7pn, Li6pn
      Common /COLLIS/ Nelm,Echrg(6)
      Common /MASSES/ Emass(11)
      Common /RANDM/  Irx
      Common /VECTOR/ Xpn,Ypn,Zpn, Xn,Yn,Zn
c At entry, Xn,Yn,Zn are direction cosines of the moving
c   8-Li ion in "detector" laboratory coordinates.
      Common /NEUTRN/ Eneut, Dc1,Dc2,Dc3, Xneut,Yneut,Zneut
      Common /NEUTR2/ Eneut2, U2,V2,W2, X2,Y2,Z2
      Common /EXC7LI/ E7Li(6),Li6pn
      Common /EXC6LI/ ExLi6(6),He4pd
c    Array ExLi6 and variable He4pd given in Subroutine TENBDK
c
      Data Kn/1/, K7Li/17/, K6Li/18/
      Data Li7pn/2.033/, Li6pn/7.251/
c   Next array represents level structure of 7-Li:
      Data E7Li/0.0, 0.478, 4.63, 6.68, 7.456, 9.7/
c   For 7-Li ground state is stable, 0.478-MeV level decays by
c   gamma emission, 4.63- and 6.68-MeV levels decay by triton +
c   alpha, and higher-lying levels decay (primarily) by neutron
c   emission to levels in 6-Li.
c
      Eg=0.0
      Ta=Ex
c First decay (a) 8-Li --> n + 7-Li:
      Taex=Ta-Li7pn
      IF (Taex .LE. 0.0) Return
      Enmax=RCKE(Kn,K7Li,Taex)
      Ehat=Enmax+5.0
c   (No magic to 5.0; it's just a value chosen to somewhat lessen
c    the "chosen" 8-Li excitation energies, on the average.)
      Fn=0.065 + 0.001*Ehat
      Temp=Fn*Ehat
      Eloww=0.0
c Now check for existing 2d neutron waiting to be processed.  If
c   there is one, restrict present decay to neutron-bound levels
c   of 7-Li.
```

```
      IF (Eneut2 .LE. 0.0) goto 5
      Tryy=Enmax-Li6pn
      IF (Tryy .GT. 0.0) Eloww=Tryy
    5 Enn=CHOOSN(Eloww,Enmax,Temp)
      Try=Enn*(Emass(Kn) + Emass(K7Li))/Emass(K7Li)
      Entry=RCKE(Kn,K7Li,Try)
      Try=Try*Enn/Entry
      Excitn=Taex-Try
      Level=7
c Possibly pair -EXCITN- with level in 7-Li.
      IF (Excitn .GT. 11.0) goto 10
      K=1
      Do 8 I=2,6
      IF (Excitn .LT. E7Li(I)) goto 9
    8 K=K+1
    9 Excitn=E7Li(K)
      Level=K
   10 Taex=Taex-Excitn
      Enn=RCKE(Kn,K7Li,Taex)
      CALL RVECT(Xp,Yp,Zp)
      Vnn=VELOCITY(Kn,Enn)
      Vnx=Xp*Vnn
      Vny=Yp*Vnn
      Vnz=Zp*Vnn
      CALL LABTRAN(Vnx,Vny,Vnz, V8Li, Vx,Vy,Vz)
      Vneut=SQRT(Vx*Vx + Vy*Vy + Vz*Vz)
      Eneut=EFROMV(Kn,Vneut)
c Rotate neutron coordinates to "detector" system.
      CALL DIRCOS(Vx,Vy,Vz, Xpn,Ypn,Zpn)
      Zx=Xn
      Zy=Yn
      Zz=Zn
      CALL TRANSVEC(Zx,Zy,Zz)
c Done.  Store information in NEUTRN common area.
      Dc1=Xn
      Dc2=Yn
      Dc3=Zn
c Now get 7-Li ion information.
      E7Lic=Taex-Enn
      V7Lic=VELOCITY(K7Li,E7Lic)
      V7x=-Xp*V7Lic
      V7y=-Yp*V7Lic
      V7z=-Zp*V7Lic
      CALL LABTRAN(V7x,V7y,V7z, V8Li, Vx,Vy,Vz)
      V7Li=SQRT(Vx*Vx + Vy*Vy + Vz*Vz)
c Test for 7-Li decay mode (b') or (b"):
      IF (Level .GE. 3) goto 15
c Program counter to here means ground state or 0.478-MeV level
c   so tidy up 7-Li.
      Eg=Excitn
```

```
      Echrg(3)=EFROMV(K7Li,V7Li)
      Return
c
c Next, decide between decay modes (b') and (b").
   15 IF (Level .GE. 5) goto 20
c
c Next section for  7-Li --> alpha + triton.
      CALL ALFAPT(Excitn,V7Li)
      Return
c Ends section on  7-Li --> alpha + triton.
c
c Next is for second neutron emission to levels in 6-Li.
c First transform motion of 7-Li ion to detector coordinates.
   20 CALL DIRCOS(Vx,Vy,Vz, Xpn,Ypn,Zpn)
      CALL TRANSVEC(Zx,Zy,Zz)
c       Done -- now have 7-Li ion motion in "detector" coordinates.
      Ta=Excitn-Li6pn
      Enmax=RCKE(Kn,K6Li,Ta)
      Ehat=Enmax+5.0
      Fn=0.065 + 0.001*Ehat
      Temp=Fn*Ehat
      Eloww=0.0
      Enn=CHOOSN(Eloww,Enmax,Temp)
      Try=Enn*(Emass(Kn) + Emass(K6Li))/Emass(K6Li)
      Entry=RCKE(Kn,K6Li,Try)
      Try=Try*Enn/Entry
      Excitn2=Ta-Try
c Maybe pair -EXCITN2- with energy of a level in 6-Li.
      Level=7
      IF (Excitn2 .GT. 20.0) goto 25
      K=1
      Do 22 I=2,6
      IF (Excitn2 .LT. ExLi6(I)) goto 23
   22 K=K+1
   23 Excitn2=ExLi6(K)
      Level=K
      IF (K. EQ. 3) Eg=Excitn2
   25 Taex=Ta-Excitn2
      En2c=RCKE(Kn,K6Li,Taex)
      Vn2c=VELOCITY(Kn,En2c)
      CALL RVECT(Xp,Yp,Zp)
      Vn2x=Xp*Vn2c
      Vn2y=Yp*Vn2c
      Vn2z=Zp*Vn2c
      CALL LABTRAN(Vn2x,Vn2y,Vn2z, V7Li, Vx,Vy,Vz)
      Vn2=SQRT(Vx*Vx + Vy*Vy + Vz*Vz)
      En2=EFROMV(Kn,Vn2)
      Eneut2=-En2
c Negative value to alert Subroutine BANKER; will be corrected
c   at exit of calling routine.
```

```
c Now rotate neutron coordinates into "detector" system.
      CALL DIRCOS(Vx,Vy,Vz, Xpn,Ypn,Zpn)
      Zx=Xn
      Zy=Yn
      Zz=Zn
      CALL TRANSVEC(Zx,Zy,Zz)
c Done.  Save information in NEUTR2 common area.
      U2=Xn
      V2=Yn
      W2=Zn
      X2=Xneut
      Y2=Yneut
      Z2=Zneut
c Okay.  Now get information on the 6-Li ion.
      E6Li=Taex-En2c
      V6Lic=VELOCITY(K6Li,E6Li)
      V6x=-Xp*V6Lic
      V6y=-Yp*V6Lic
      V6z=-Zp*V6Lic
      CALL LABTRAN(V6x,V6y,V6z, V7Li, Vx,Vy,Vz)
      V6Li=SQRT(Vx*Vx + Vy*Vy + Vz*Vz)
c See subroutine TENBDK for decay characteristics of levels of 6-Li.
      IF (Level .EQ. 2) goto 30
      IF (Level .GE. 4) goto 30
c Program counter to here for Level=1 or 3.  Tidy up 6-Li.
      Echrg(3)=EFROMV(K6Li,V6Li)
      Return
c
c Last section: 6-Li --> d + alpha.
   30 CALL ALFAPD(Excitn2,V6Li)
      Return
c
c   At exit from this routine the -Echrg- array will have information on
c decay of 8-Li as follows:
c
c   Final Decay Mode    |   Echrg(3)    |   Echrg(5)    |   Echrg(6)
c   ------------------- | ------------- | ------------- | -------------
c       n + 7-Li        |    E(7-Li)    |     0.0       |     0.0
c      2n + 6-Li        |    E(6-Li)    |     0.0       |     0.0
c     n + t + alpha     |      0.0      |   E(alpha)    |    E(t)
c    2n + d + alpha     |     E(d)      |   E(alpha)    |     0.0
c
c      Echrg(4) has energy of alpha from 12-B --> alpha + 8-Li, or
c     energy of proton from 9-Be --> p + 8-Li.
c
      END
```

```
C    This is file ETOL.FOR
c
c     Purpose is equivalence:  light-unit value <---> energy (of charged
c        particle - proton, carbon ion, or alpha particle.)
c
      FUNCTION ETOL(N,A)
c
c       N=1   Get proton energy (MeV) for A = proton light-unit value;
c       N=3   Get carbon energy (MeV) for A = carbon light-unit value;
c       N=5   Get alpha energy (MeV) for A = alpha light-unit value;
c       N=2   Get proton light-unit value for A = proton energy (MeV);
c       N=4   Get carbon light-unit value for A = carbon energy (MeV);
c       N=6   Get alpha light-unit value for A = alpha energy (MeV).
c
c       N=7   Get deuteron energy (MeV) for A = deuteron light unit value;
c       N=8   Get deuteron light-unit value for A = deuteron energy (MeV);
c    Tabulated data entered 6/87 -- estimated from measurements of
c    Bechetti, et al, Nucl. Instrum Methods 138 (1976) 93.
c
      Dimension X(124),Y(124)
      Common /LTABLE/ Itab,Ene(124),Hydl(124),Carl(124),Alpl(124),
     x Dlight(124)
c
      DATA ITAB/124/
      DATA (HYDL(I),I=1,124)/0.0,2.150E-4,1.030E-3,1.150E-3,1.270E-3,
     11.400E-3,1.460E-3,1.520E-3,1.580E-3,1.640E-3,1.760E-3,1.880E-3,
     22.000E-3,2.120E-3,2.240E-3,2.360E-3,2.480E-3,2.600E-3,2.720E-3,
     32.850E-3,3.090E-3,3.340E-3,3.570E-3,3.820E-3,4.070E-3,4.460E-3,
     44.840E-3,5.220E-3,5.620E-3,6.150E-3,6.710E-3,7.400E-3,8.120E-3,
     58.860E-3,9.620E-3,1.040E-2,1.122E-2,1.207E-2,1.292E-2,1.377E-2,
     61.465E-2,1.645E-2,1.838E-2,2.035E-2,2.245E-2,2.460E-2,2.680E-2,
     72.900E-2,3.130E-2,3.380E-2,3.650E-2,4.220E-2,4.830E-2,5.450E-2,
     86.090E-2,6.780E-2,7.860E-2,9.100E-2,1.040E-1,1.175E-1,1.367E-1,
     91.562E-1,1.825E-1,2.095E-1,2.385E-1,2.690E-1,2.995E-1,3.320E-1,
     A3.660E-1,4.000E-1,4.360E-1,4.725E-1,5.480E-1,6.250E-1,7.030E-1,
     B7.830E-1,8.660E-1,9.520E-1,1.042E+0,1.135E+0,1.230E+0,1.327E+0,
     C1.521E+0,1.718E+0,1.915E+0,2.112E+0,2.310E+0,2.630E+0,2.950E+0,
     D3.280E+0,3.620E+0,4.080E+0,4.550E+0,5.140E+0,5.750E+0,6.360E+0,
     E6.970E+0,7.580E+0,8.200E+0,8.830E+0,9.480E+0,1.014E+1,1.080E+1,
     F 12.15,   13.5,    14.9,    16.3,    17.7,    19.1,    20.5,
     G 21.9,    23.35,   24.8,    27.7,    30.75,   33.8,    36.9,
     H 40.0,    44.65,   49.4,    54.3,    59.2,    65.8,    72.4/
c Light values for E(proton) between 0.1 and 40 MeV taken from the
c    O5S tabulation.  Same energy region for light values for
c    E(Carbon) also from O5S tabulation.  Alpha light, however,
c    was adjusted following comparisons with measured responses
c    during program development.
      DATA (CARL(I),I=1,124)/.0,6.0E-5,.000228,.00025,.000272,.000294,
     1.000305,.000316,.000327,.000338,.000360,.000381,.000402,.000422,
     2.000443,.000462,.000482,.000500,.000519,.000537,.000571,.000607,
```

```
     3.000640,.000673,.000707,.000756,.000806,.000856,.000905,.000972,
     4.001038,.001115,.001192,.001270,.001347,.001424,.001501,.001573,
     5.001645,.001717,.001788,.001932,.002076,.002219,.002363,.002506,
     6.002650,.002793,.002926,.003058,.003191,.003433,.003676,.003919,
     7.004140,.004361,.004692,.005023,.005354,.005686,.006127,.006569,
     8.007093,.007604,.008128,.008639,.009163,.009660,.010157,.010667,
     9.011150,.011647,.012641,.013634,.014628,.015622,.016615,.017664,
     A.018713,.019762,.020810,.021859,.023957,.026054,.028152,.030250,
     B.032347,.035549,.038750,.041952,.045154,.049570,.053986,.059616,
     C.065412,.071346,.077694,.084594,.091632,.098808,.105984,.113712,
     D.121440,.136896,.153456,.170016,.187680,.206448,.225216,.246192,
     E.268272,.290352,.312432,.357696,.406272,.460368,.516672,.575184,
     F.670128,.775008,.888720,1.00464,1.18680,1.36896/
      DATA (ALPL(I),I=1,124)/0.0,6.500E-5,2.850E-4,3.210E-4,3.550E-4,
     13.880E-4,4.040E-4,4.200E-4,4.360E-4,4.520E-4,4.840E-4,5.160E-4,
     25.480E-4,5.800E-4,6.100E-4,6.400E-4,6.700E-4,7.000E-4,7.300E-4,
     37.580E-4,8.140E-4,8.700E-4,9.260E-4,9.820E-4,1.040E-3,1.130E-3,
     41.220E-3,1.310E-3,1.400E-3,1.520E-3,1.640E-3,1.790E-3,1.940E-3,
     52.090E-3,2.240E-3,2.400E-3,2.560E-3,2.720E-3,2.880E-3,3.040E-3,
     63.200E-3,3.520E-3,3.860E-3,4.200E-3,4.540E-3,4.900E-3,5.270E-3,
     75.640E-3,6.010E-3,6.380E-3,6.750E-3,7.510E-3,8.300E-3,9.120E-3,
     89.960E-3,1.080E-2,1.210E-2,1.350E-2,1.500E-2,1.656E-2,1.876E-2,
     92.100E-2,2.400E-2,2.700E-2,3.020E-2,3.430E-2,3.880E-2,4.360E-2,
     A4.860E-2,5.390E-2,5.940E-2,6.510E-2,7.730E-2,9.040E-2,1.044E-1,
     B1.193E-1,1.350E-1,1.520E-1,1.693E-1,1.876E-1,2.070E-1,2.270E-1,
     C2.690E-1,3.150E-1,3.640E-1,4.155E-1,4.705E-1,5.585E-1,6.530E-1,
     D7.545E-1,8.620E-1,1.016E+0,1.180E+0,1.410E+0,1.660E+0,1.910E+0,
     E2.200E+0,2.460E+0,2.770E+0,3.070E+0,3.390E+0,3.710E+0,4.000E+0,
     F4.700E+0,5.400E+0,6.140E+0,6.820E+0,7.600E+0,8.300E+0,9.100E+0,
     G1.000E+1,1.080E+1,1.160E+1,1.300E+1,1.470E+1,1.610E+1,1.790E+1,
     H 19.5,    21.8,    24.2,    26.5,    28.8,    31.9,    34.4/
      Data Dlight/  0.0,  0.00012, 0.00052, 0.00059, 0.00066,
     & 0.00074,0.00077,0.00081,0.00084,0.00087,0.00095,0.00101,0.00108,
     & 0.00115,0.00121,0.00128,0.00135,0.00141,0.00148,0.00154,0.00167,
     & 0.00179,0.00191,0.00205,0.00217,0.00236,0.00255,0.00275,0.00295,
     4 0.00322,0.0035, 0.00377,0.00407,0.0044, 0.00475,0.0051, 0.00546,
     5 0.00585,0.00625,0.0067, 0.0071, 0.008,  0.0089, 0.01,   0.01116,
     6 0.0124, 0.01365,0.01496,0.0163, 0.0177, 0.0191, 0.02205,0.02514,
     7 0.0284, 0.0317, 0.0352, 0.0406, 0.0463, 0.05225,0.0584, 0.067,
     8 0.076,  0.0877, 0.10,   0.1128, 0.1261, 0.14,   0.1543, 0.169,
     9 0.1842, 0.20,   0.216,  0.249,  0.284,  0.3206, 0.3585, 0.398,
     & 0.438,  0.48,   0.523,  0.568,  0.6135, 0.708,  0.8075, 0.911,
     a 1.0186, 1.13,   1.305,  1.487,  1.678,  1.876,  2.152,  2.44,
     b 2.817,  3.21,   3.6,    4.0,    4.4,    4.85,   5.3,    5.7,
     c 6.15,   6.6,    7.50,   8.55,   9.5,    10.5,   11.55,  12.5,
     d13.6,   14.65,  15.6,   16.75,  18.8,   20.9,   23.0,   25.0,
     e27.2,   30.2,   33.7,   37.0,   40.0,   44.5,   49.0/
c
       DATA ENE /  0.000,  0.001,  0.010,  0.012,  0.014,
     &  0.016,  0.017,  0.018,  0.019,  0.020,  0.022,  0.024,  0.026,
```

```
     & 0.028,  0.030,  0.032,  0.034,  0.036,  0.038,  0.040,  0.044,
     & 0.048,  0.052,  0.056,  0.060,  0.066,  0.072,  0.078,  0.084,
     & 0.092,  0.100,  0.110,  0.120,  0.130,  0.140,  0.150,  0.160,
     & 0.170,  0.180,  0.190,  0.200,  0.220,  0.240,  0.260,  0.280,
     & 0.300,  0.320,  0.340,  0.360,  0.380,  0.400,  0.440,  0.480,
     & 0.520,  0.560,  0.600,  0.660,  0.720,  0.780,  0.840,  0.920,
     & 1.000,  1.100,  1.200,  1.300,  1.400,  1.500,  1.600,  1.700,
     & 1.800,  1.900,  2.000,  2.200,  2.400,  2.600,  2.800,  3.000,
     & 3.200,  3.400,  3.600,  3.800,  4.000,  4.400,  4.800,  5.200,
     & 5.600,  6.000,  6.600,  7.200,  7.800,  8.400,  9.200, 10.000,
     & 11.000, 12.000, 13.000, 14.000, 15.000, 16.000, 17.000, 18.000,
     & 19.000, 20.000, 22.000, 24.000, 26.000, 28.000, 30.000, 32.000,
     & 34.000, 36.000, 38.000, 40.000, 44.000, 48.000, 52.000, 56.000,
     & 60.000, 66.000, 72.000, 78.000, 84.000, 92.000,100.000/
c
      Aa=A
      M=N
      L=Itab
      IF (M .GT. 0) goto (1,9,1,9,1,9,1,9,25),M
   25 Etol = 0.0
      Type 40, M
   40 Format(/'  *** Error Function ETOL, Input N ='I12//)
      Write (21,40) M
      Return
c
    1 Do 2 I=1,L
    2 Y(I)=Ene(I)
      IF (M - 3) 3,5,7
    3 Do 4 I=1,L
    4 X(I)=Hydl(I)
      Goto 19
    5 Do 6 I=1,L
    6 X(I)=Carl(I)
      Goto 19
    7 Do 8 I=1,L
      IF (M.EQ.5) X(I)=Alpl(I)
      IF (M.EQ.7) X(I)=Dlight(I)
    8 Continue
      Goto 19
    9 Do 10 I=1,L
   10 X(I)=Ene(I)
      IF (M - 4) 11,13,15
   11 Do 12 I=1,L
   12 Y(I)=Hydl(I)
      Goto 19
   13 Do 14 I=1,L
   14 Y(I)=Carl(I)
      Goto 19
   15 IF (M.EQ.8) goto 17
      Do 16 I=1,L
```

```
   16 Y(I)=Alpl(I)
      Goto 19
   17 Do 18 I=1,L
   18 Y(I)=Dlight(I)
c
   19 If (Aa .LT. X(3)) goto 20
      Etol=EXTERP(X,Y,Aa,L,4)
      Return
   20 Etol=EXTERP(X,Y,Aa,L,1)
      Return
      END
```

```
c   This is file EX8LI.FOR
c
c Contains routines involving "decay" of Li ions.
c
      Function EX8LI(Exc12B)
cc
c Purpose: for alpha decay of highly-excited 12-B, determine 8-Li
c   excitation energy.  Present programming mocks up TNG results.
c
      Real*4 Li8pa
      Common /RANDM/  Irx
      Common /EXC8LI/ E8Li(10)
c
      Dimension Ex(28),P(10),P1(28),P2(28),P3(28),P4(28),P5(28),
     x    P6(28),P7(28),P8(28),P9(28),P10(28)
c
c Next array represents level structure of 8-Li:
      Data E8Li/0.0,0.981,2.255, 3.21, 5.4, 6.1, 6.53, 7.1, 9.0, 10.82/
      Data N/28/, Nterp/1/, Temp/4.0/, Li8pa/10.002/
c
c Next arrays relate probabilities for population of individual levels
c   vs excitation energy (Ex) in 12-B.
      Data Ex/ 11.0,  11.4,  12.3,  13.3,  14.2,  15.0,  15.5,  16.5,
     a  17.5,  18.5,  19.5,  20.0,  21.0,  22.0,  23.0,  24.0,  25.0,
     b  26.0,  27.0,  28.0,  30.0,  32.0,  34.0,  36.0,  38.0,  40.0,
     c  44.0,  48.0/
      Data P1/  1.0,  .9815, .985,  .8606, .6478, .574,  .513,  .41,
     a  .341,  .288,  .3448, .338,  .315,  .28,   .25,   .226,  .215,
     b  .2066, .2004, .186,  .1582, .141,  .1235, .1087, .0933, .089,
     c  .079,  .0665/
      Data P2/  1.0,   1.0,   1.0,  .9996, .9808, .899,  .813,  .66,
     a  .553,  .483,  .5268, .518,  .49,   .45,   .415,  .388,  .373,
     b  .3616, .3514, .333,  .3002, .275,  .2505, .2257, .1983, .179,
     c  .149,  .1115/
      Data P3/  1.0,   1.0,   1.0,   1.0,  .9998, .989,  .983,  .95,
     a  .893,  .783,  .7798, .758,  .71,   .66,   .616,  .583,  .56,
     b  .5416, .5264, .502,  .4572, .42,   .3845, .3507, .3133, .284,
     c  .235,  .1815/
      Data P4/  1.0,   1.0,   1.0,   1.0,   1.0,   1.0,   1.0,  .984,
     a  .968,  .903,  .9048, .888,  .838,  .7843, .733,  .6943, .665,
     b  .6406, .6204, .591,  .5382, .494,  .4535, .4147, .3733, .338,
     c  .276,  .2115/
      Data P5/  1.0,   1.0,   1.0,   1.0,   1.0,   1.0,   1.0,   1.0,
     a  .999,  .988,  .9798, .958,  .918,  .8773, .838,  .8093, .786,
     b  .7656, .7454, .715,  .6532, .595,  .5405, .4977, .4433, .4,
     c  .322,  .2445/
      Data P6/  1.0,   1.0,   1.0,   1.0,   1.0,   1.0,   1.0,   1.0,
     a   1.0,  .994,  .9898, .973,  .947,  .9233, .903,  .8833, .866,
     b  .8486, .8284, .796,  .7294, .666,  .6075, .5557, .5033, .455,
     c  .366,  .2785/
```

```
      Data P7/  1.0,   1.0,   1.0,   1.0,   1.0,   1.0,   1.0,   1.0,
     a   1.0,   1.0,  .9998, .988,  .97,   .9553, .943,  .9313, .921,
     b  .9086, .8924, .863,  .7954, .73,   .6675, .6127, .5583, .507,
     c  .414,  .3235/
      Data P8/  1.0,   1.0,   1.0,   1.0,   1.0,   1.0,   1.0,   1.0,
     a   1.0,   1.0,   1.0,  .998,  .99,   .9843, .978,  .9723, .9665,
     b  .9576, .9424, .913,  .8444, .777,  .7115, .6527, .5953, .542,
     c  .4433, .3475/
      Data P9/  1.0,   1.0,   1.0,   1.0,   1.0,   1.0,   1.0,   1.0,
     a   1.0,   1.0,   1.0,   1.0,   1.0,  .9998, .9985, .9973, .9947,
     b  .9886, .9754, .9472, .8804, .8152, .7495, .6897, .6303, .5762,
     c  .4733, .3755/
      Data P10/ 1.0,   1.0,   1.0,   1.0,   1.0,   1.0,   1.0,   1.0,
     a   1.0,   1.0,   1.0,   1.0,   1.0,   1.0,  .9999, .9995, .998,
     b  .993,  .981,  .954,  .889,  .825,  .76,   .7,    .64,   .585,
     c  .48,   .38/
c
      E=Exc12B
      P(1) =EXTERP(Ex, P1,E,N,Nterp)
      P(2) =EXTERP(Ex, P2,E,N,Nterp)
      P(3) =EXTERP(Ex, P3,E,N,Nterp)
      P(4) =EXTERP(Ex, P4,E,N,Nterp)
      P(5) =EXTERP(Ex, P5,E,N,Nterp)
      P(6) =EXTERP(Ex, P6,E,N,Nterp)
      P(7) =EXTERP(Ex, P7,E,N,Nterp)
      P(8) =EXTERP(Ex, P8,E,N,Nterp)
      P(9) =EXTERP(Ex, P9,E,N,Nterp)
      P(10)=EXTERP(Ex,P10,E,N,Nterp)
c
      Pran=RAN(Irx)
      Nb=1
      Do 1 J=1,10
      IF (Pran .LE. P(J)) goto 2
    1 Nb=Nb+1
    2 IF (Nb .EQ. 11) goto 3
      Ex8Li=E8Li(Nb)
      Return
c
c Program to here--highly excited 8-Li, E(level) from "continuum"
    3 Ex8Li=E8Li(10)
      Emax=E-22.5
      IF (Emax .LE. 0.0) Return
      Eatry=CHOOSP(Emax,Temp)
      Ex8Li=E-Eatry-Li8pa
      Return
      END
```

```
C   This is file EXLI8.FOR
c
      Function EXLI8(Exc9Be)
cc
c Purpose: for proton decay of highly-excited 9-Be, determine 8-Li
c   excitation energy...program mocks up TNG results.
c
      Real*4 Li8pp
      Common /RANDM/  Irx
      Common /EXC8LI/ E8Li(10)
c     E8Li array in Function EX8LI
c
      Dimension Ex(28),P(10),P1(28),P2(28),P3(28),P4(28),P5(28),
     x     P6(28),P7(28),P8(28),P9(28),P10(28)
      Data N/28/, Nterp/1/, Li8pp/16.888/
c
c Next arrays relate probabilities for population of individual
c   levels vs excitation energy (Ex) in 9-Be.
      Data Ex/ 17.9,  18.25, 19.2,  19.6,  20.15, 20.6,  22.35, 22.7,
     a  23.05, 23.45, 24.15, 25.0,  25.9,  26.8,  27.7,  28.7,  30.0,
     b  32.0,  34.0,  36.0,  28.0,  40.0,  42.0,  44.0,  46.0,  48.0,
     c  50.0,  55.0/
      Data P1/  1.0,  .99,   .67,   .629,  .585,  .551,  .514,  .497,
     a  .417,  .388,  .3367, .323,  .31,   .3042, .3042, .2822, .28,
     b  .236,  .195,  .151,  .113,  .08,   .056,  .038,  .025,  .0165,
     c  .0106, .003/
      Data P2/  1.0,   1.0,   1.0,  .989,  .97,   .936,  .834,  .795,
     a  .697,  .655,  .5667, .525,  .483,  .4472, .4282, .3842, .358,
     b  .288,  .2295, .273,  .127,  .089,  .0616, .0415, .0271, .0177,
     c  .0113, .003/
      Data P3/  1.0,   1.0,   1.0,   1.0,   1.0,  .991,  .93,   .908,
     a  .885,  .857,  .7847, .745,  .697,  .6472, .6102, .5442, .493,
     b  .386,  .2985, .22,   .158,  .109,  .0743, .0492, .0318, .0204,
     c  .0128, .003/
      Data P4/  1.0,   1.0,   1.0,   1.0,   1.0,   1.0,   1.0,  .998,
     b  .995,  .989,  .9687, .942,  .894,  .8352, .7702, .6962, .623,
     c  .484,  .3695, .27,   .193,  .1325, .0909, .0597, .0388, .0248,
     d  .0156, .0035/
      Data P5/  1.0,   1.0,   1.0,   1.0,   1.0,   1.0,   1.0,   1.0,
     a   1.0,  .9976, .9917, .98,   .952,  .9142, .8672, .8062, .741,
     b  .594,  .4564, .335,  .241,  .1665, .1149, .0762, .0503, .0328,
     c  .021,  .0054/
      Data P6/  1.0,   1.0,   1.0,   1.0,   1.0,   1.0,   1.0,   1.0,
     a   1.0,   1.0,  .998,  .992,  .977,  .9562, .9292, .8922, .841,
     b  .697,  .5485, .407,  .294,  .2045, .1419, .0947, .0628, .0416,
     c  .0268, .0074/
      Data P7/  1.0,   1.0,   1.0,   1.0,   1.0,   1.0,   1.0,   1.0,
     a   1.0,   1.0,   1.0,  .998,  .992,  .9822, .9687, .9462, .908,
     b  .769,  .6135, .46,   .335,  .2363, .1659, .1127, .0758, .0511,
     c  .0336, .0104/
```

```
      Data P8/  1.0,   1.0,   1.0,   1.0,   1.0,   1.0,   1.0,   1.0,
     a   1.0,   1.0,   1.0,   1.0,   1.0,  .9997, .9967, .9882, .966,
     b  .8375, .6815, .518,  .381,  .2713, .1916, .1307, .0878, .0591,
     c  .0386, .012/
      Data P9/  1.0,   1.0,   1.0,   1.0,   1.0,   1.0,   1.0,   1.0,
     a   1.0,   1.0,   1.0,   1.0,   1.0,   1.0,   1.0,  .9997, .991,
     b  .8855, .7395, .576,  .431,  .3108, .2216, .1532, .1044, .0711,
     c  .0471, .0153/
      Data P10/ 1.0,   1.0,   1.0,   1.0,   1.0,   1.0,   1.0,   1.0,
     a   1.0,   1.0,   1.0,   1.0,   1.0,   1.0,   1.0,   1.0,  .992,
     b  .8917, .7532, .5925, .447,  .3252, .2336, .1627, .1114, .0759,
     c  .0501, .0163/
c
      E=Exc9Be
      P(1) =EXTERP(Ex, P1,E,N,Nterp)
      P(2) =EXTERP(Ex, P2,E,N,Nterp)
      P(3) =EXTERP(Ex, P3,E,N,Nterp)
      P(4) =EXTERP(Ex, P4,E,N,Nterp)
      P(5) =EXTERP(Ex, P5,E,N,Nterp)
      P(6) =EXTERP(Ex, P6,E,N,Nterp)
      P(7) =EXTERP(Ex, P7,E,N,Nterp)
      P(8) =EXTERP(Ex, P8,E,N,Nterp)
      P(9) =EXTERP(Ex, P9,E,N,Nterp)
      P(10)=EXTERP(Ex,P10,E,N,Nterp)
c
      Pran=RAN(Irx)
      M=1
      Do 1 J=1,10
      IF (Pran .LE. P(J)) goto 2
    1 M=M+1
    2 IF (M .EQ. 11) goto 3
      ExLi8=E8Li(M)
      Return
c
c   Or get highly-excited 8-Li, E(Level) from "continuum"
    3 ExLi8=E8Li(10)
      Emax=E-29.4
      IF (Emax .LE. 0.0) Return
      Ehat=Emax+5.0
      F=0.1245 + 0.001*ABS(Ehat-45.0)
      Temp=F*Ehat
      Ep=CHOOSP(Emax,Temp)
      ExLi8=E-Ep-Li8pp
      Return
      END
```

```
C     This is file EXTERP.FOR
c
c       Purpose is to provide interpolation between two points in a table
c       of independent data, A, to get a value from a table of dependent
c       data, B, for an input value C(A).
c           N=dimension of tables A and B
c           Ntype variable:                  FOR:     A-array   B-array
c                                        Ntype =1     Linear    Linear
c                                              =2     Linear    Log
c                                              =3     Log       Linear
c                                              =4     Log       Log
c
      FUNCTION EXTERP(A,B,C,N,Ntype)
      Real*8 Ac,Ae,Af,Amin,R,Xb,Xc,Y,Z
      Dimension A(1),B(1)
      Data Amin/3.72008D-24/
c
      Exterp=B(1)
      If (C.LE.A(1)) Return
      Exterp=B(N)
      If (C.GE.A(N)) Return
c
c       First 4 statements take care of case where input value of C was
c         outside of the limits of the tabular values of the A array.
c
      Do 2 I=2,N
      IF (C - A(I)) 3,9,2
    9 Exterp=B(I)
      Return
    2 Continue
    3 J=I
      I=J-1
c
      L=Ntype
      Ac=C
      Ae=A(I)
      Af=A(J)
      Xb=B(I)
      Xc=B(J)
      If (L.LE.2) goto 4
      IF (Ac .LT. Amin) Ac=Amin
      Ac=Dlog(Ac)
      IF (Ae .LT. Amin) Ae=Amin
      Ae=Dlog(Ae)
      IF (Af .LT. Amin) Af=Amin
      Af=Dlog(Af)
    4 IF (L.LE.1 .OR. L.EQ.3) goto 7
      IF (Xb .LT. Amin) Xb=Amin
      Xb=Dlog(Xb)
      IF (Xc .LT. Amin) Xc=Amin
```

```
      Xc=Dlog(Xc)
    7 R=(Ac-Ae)/(Af-Ae)
      Y=Xb+R*(Xc-Xb)
      Z=Y
      IF (L.EQ.2 .OR. L.EQ.4) Z=Dexp(Y)
      Exterp=Z
      Return
      END
```

```
c  This is file HYDROG.FOR
c     Purpose is to do the calculations for the neutron-proton
c collision.  Some of the programming is taken from the O5S
c coding.
c
      SUBROUTINE HYDROG
C
C    HYDROG CONTAINS THE KINEMATICS FOR THE N+H = N+H COLLISION,
C       THE POSSIBILITY OF THE RECOIL PROTON LEAKING OUT OF
C       THE SCINTILLATOR IS CONSIDERED.
      Common /RANDM/ IRX
      Common /NEUTRN/ SPDSQ, U, V, W, X, Y, Z
      Common /PROTON/ NOPROT, RANGE(80), PROTEN(80)
c    /PROTON/ common data in File PROTN.FOR
      Common /MASSES/ Emass(19)
      Common /NAID/ Rdet,Ht,RC,Rz
      Common /COLLIS/ Nelm, Echrg(3)
      Common /VECTOR/ Xpn,Ypn,Zpn, Xn,Yn,Zn
c
      Dimension Energy(16),Alpha(16),Beta(16),Gamma(16)
      Dimension XMU(21),XMUSQ(21),XMUCUB(21)
      DIMENSION PMU(21)
c
      DATA  ENTOLD/0.0/, CKVALU/13.7/, Kn/1/, Kp/2/
      DATA NUMBER/16/
      DATA (ENERGY(I),I=1,16)/13.7,14.1,17.9,22.5,27.5,32.5,37.5,42.5,
     &47.5,52.5,57.5,62.5,70.0,80.0,90.0,100./
      DATA (ALPHA(I),I=1,16)/56.4,52.2,40.0,32.9,27.0,21.8,17.8,13.8,
     &13.3,11.7,9.4, 7.6, 5.6, 5.4, 4.4, 3.1/
      DATA (BETA(I),I=1,16)/ 0.0,-3.4,-3.4,0.15,0.05,0.85,.3,0.30,.4,1.,
     10.80,0.80,0.05,-.65,-.15,-.40/
      DATA (GAMMA(I),I=1,16)/0.0,2.0,1.4,3.25,3.05,5.55,5.1,7.0,6.3,6.8,
     1 7.4, 7.2,8.45,7.05,8.05, 7.4/
c
       DATA XMU /-1.00,-0.90,-0.80,-0.70,
     &-0.60,-0.50,-0.40,-0.30,-0.20,-0.10,-0.00, 0.10,
     & 0.20, 0.30, 0.40, 0.50, 0.60, 0.70, 0.80, 0.90, 1.00/
        DATA XMUSQ /1.000, .810, .640, .490,
     & .360, .250, .160, .090, .040, .010, .000, .010,
     & .040, .090, .160, .250, .360, .490, .640, .810,1.000/
       DATA XMUCUB /-1.0000,-0.7290,-0.5120,-0.3430,
     &-0.2160,-0.1250,-0.0640,-0.0270,-0.0080,-0.0010,-0.0000, 0.0010,
     & .0080, 0.0270, 0.0640, 0.1250, 0.2160, 0.3430, 0.5120, 0.7290,1./
c
      En=SPDSQ
      Vn=VELOCITY(Kn,En)
      CALL CMTRAN(Kn,Kp,Vn, Vcom,Enc,Epc)
      Vnc=VELOCITY(Kn,Enc)
      Vpc=VELOCITY(Kp,Epc)
C
```

```
C * * * IF SPDSQ IS LESS THAN CKVALU USE ISOTROPIC (CM) SCHEME FOR
C * * * DETERMINING THE DIRECTION COSINES OF THE OUTGOING NEUTRON.
C
      IF ( SPDSQ .LT. CKVALU )   GO TO 140
C
C * * * DETERMINE THE VALUES OF A, B AND C TO BE USED IN CALCULATING
C * * * THE ANGULAR DISTRIBUTION FUNCTION.  ( THE ANGULAR DISTRIBUTION
C * * * IS APPROXIMATED BY P(E,MU) = A(E) + B(E) * MU + C(E)* MU**2 ).
C
C CALCULATION OF XMU AND ITS POWERS HAS BEEN REMOVED, AND
C  A LOOK-UP TABLE IS USED INSTEAD.  (ZWBell addition, I think.)
      IF ( SPDSQ .EQ. ENTOLD )   GO TO 110
      ENTOLD = SPDSQ
      Nterp=1
      A=EXTERP(Energy,Alpha,En,Number,Nterp)
      B=EXTERP(Energy,Beta,En,Number,Nterp)
      C=EXTERP(Energy,Gamma,En,Number,Nterp)
c
C * * * INTEGRATE THE ANGULAR DISTRIBUTION FUNCTION.
   80 B2 = B / 2.
      C3 = C / 3.
      DO  90  K = 1, 21
      PMU(K) = A * ( XMU(K) + 1. ) + B2 * ( XMUSQ(K) - 1. ) +
     A         C3 * ( XMUCUB(K) + 1. )
   90 CONTINUE
C
C * * * PICK MU FROM THE DISTRIBUTION ON INTERVAL [0..PMU(21)]
  110 RAND = RAN(IRX)*PMU(21)
      Nterp=1
      Xxmu=EXTERP(Pmu,Xmu,Rand,21,Nterp)
C
C * * * CHOOSE AZIMUTHAL DIRECTION.
        RANN = 6.28318530*RAN(IRX)
        SINPHI = SIN(RANN)
        COSPHI = COS(RANN)
      Sintheta=SQRT(1.0-Xxmu*Xxmu)
      Xp=Sintheta*Cosphi
      Yp=Sintheta*Sinphi
      Zp=Xxmu
      Goto 15
c
  140 CALL RVECT(Xp,Yp,Zp)
c Direction cosines of incoming neutron:
   15 Vnx=Xp*Vnc
      Vny=Yp*Vnc
      Vnz=Zp*Vnc
c Vnx,Vny,Vnz are components of neutron velocity in the "neutron"
c   center-of-mass coordinate system.  Get the same for the proton.
      Vpx=-Xp*Vpc
      Vpy=-Yp*Vpc
```

```
      Vpz=-Zp*Vpc
c  For the neutron -- get velocity components in "neutron" lab.
c    coordinate system.
      CALL LABTRAN(Vnx,Vny,Vnz, Vcom, Vx,Vy,Vz)
      Vneut=SQRT(Vx*Vx + Vy*Vy + Vz*Vz)
c  Now get neutron's energy, then get its direction cosines in the
c    "neutron" lab. system, finally rotate those into "detector"
c    coordinate system using TRANSVEC.
      Eneut=EFROMV(Kn,Vneut)
      SPDSQ=Eneut
      CALL DIRCOS(Vx,Vy,Vz, Xpn,Ypn,Zpn)
      Zx=U
      Zy=V
      Zz=W
      CALL TRANSVEC(Zx,Zy,Zz)
      U=Xn
      V=Yn
      W=Zn
c
c Now determine proton's energy and see if the proton stays in the
c    detector or gets out.
      CALL LABTRAN(Vpx,Vpy,Vpz, Vcom, Vx,Vy,Vz)
      Vprot=SQRT(Vx*Vx + Vy*Vy + Vz*Vz)
      Eprot=EFROMV(Kp,Vprot)
      Echrg(1)=Eprot
      Echrg(2)=0.0
c
      IF (Eprot .LE. 0.1) goto 20
c    Eprot < 100 keV, range a few micrometers.
      CALL DIRCOS(Vx,Vy,Vz, Xpn,Ypn,Zpn)
      CALL TRANSVEC(Zx,Zy,Zz)
c Xn,Yn,Zn are the proton's direction cosines in lab coordinates.
      Nterp = 4
      Protpl=PLNGTH(Xn,Yn,Zn, X,Y,Z, Rdet,Ht)
      Rprot=EXTERP(Proten,Range,Eprot,Noprot,Nterp)
c Now compare proton's range in detector (RPROT) with the path length
c   of the vector having direction cosines Xn, Yn, Zn from position
c   X, Y, Z (PROTPL).
      RangeQ=Rprot-Protpl
      IF (RangeQ .LE. 0.0) goto 20
c   If it goes to next step, the proton got out of the detector.
      Eprotf=EXTERP(Range,Proten,RangeQ,Noprot,Nterp)
      Echrg(2)=Eprotf
   20 Nelm=1
      CALL BANKR2
      Return
      END
```

```
c   This is file IBOX.FOR
c
      INTEGER FUNCTION IBOX(Path,Xsect,D4)
c     Purpose is to determine by random number if an interaction took place
c  along the PATH given an "attenuation" cross section XSECT.  If not,
c  set IBOX=0.  If so, return with IBOX = index (1-10) of the event
c  type and determine the distance along PATH to the interaction point.
c   Return with this distance as variable D4.
c
      Real*8 D,DP,U,X
      Common /RANDM/ Irx
      Common /PROB/ P(12)
c
      D4=0.0
      DP=Path
      X=Xsect
      Itype=0
      U=RAN(Irx)
      D=DEXP(-DP*X)
      IF (U .LT. D) goto 15
c
      Ip1=IFIX(P(1)) -1
      V=RAN(Irx)
      K=2
      Do 8 I=1,Ip1
      IF (V .LE. P(I+2)) goto 10
    8 K=K+1
   10 Itype=K-1
      D=-DLOG(U)/X
      D4=D
   15 Ibox=Itype
      Return
      END
```

```
C   This is file INELAS.FOR
c
      SUBROUTINE INELAS
C  INELAS DOES THE CALCULATIONS FOR THE 12C INELASTIC REACTION.
C
      Common /RANDM/ IRX
      Common /NEUTRN/ Eneut, Ax, Ay, Az, X, Y, Z
      Common /COLLIS/ Nelm,Echrg(6)
      Common /CSCATT/ Xpn,Ypn,Zpn,Vnca,Vcca,Vcm
c
      Dimension A1(10),B1(10),B2(10),B3(10),B4(10),Fi(4)
c
      Data Ipoly/10/, Nterp/1/, Nfi/4/
      Data Q/4.433/, Rmass/0.922461/, Kn/1/, K12C/7/, TenMeV/10.0/
c
c   Next arrays to get anisotropic scattering distribution.
c (See Glasgow, et al, Nuclear Science and Engineering, 61
c (1976) 521 for data between 9.19 and 13 MeV.)
      Data A1/ 6.0, 8.56, 9.19, 10.69, 10.96, 11.73,
     m  12.95, 14.6, 20.8, 26.0/
      Data B1/0.07784, 0.03034, -0.0396, 0.166, 0.2027, 0.258,
     m 0.1733, 0.21885, 0.39757, 0.55621/
      Data B2/0.04819, 0.17527, 0.1836, 0.203, 0.2504, 0.2406,
     m 0.2843, 0.209, 0.20374, 0.24515/
      Data B3/0.004335, -0.03078, -0.00117, 0.0587, 0.0376, 0.0448,
     m 0.0489, 0.03678, 0.07678, 0.09518/
      Data B4/0.0, 0.01355, 0.0182, 0.0186, 0.0276, 0.0128,
     m 0.0233, -0.001315, 0.01595, 0.01973/
c
C Enter with incident neutron energy, direction cosines.
C Exit with final neutron energy, carbon-ion energy, new direction
C  cosines of scattered neutron.  Spot of interaction is unchanged.
c
      En=Eneut
      Vn=VELOCITY(Kn,En)
      CALL CMTRAN(Kn,K12C,Vn, Vcom,Enc,Ecc)
      Vcm=Vcom
      Tec=Enc+Ecc
      Ta=Tec-Q
      IF (Ta .GT. 0.0) goto 10
      Type 5, En
    5 Format(/'  *** Error Subroutine INELAS; E(neut) at entry = '
     V    1PE11.4/)
      Eneut=0.0
      Echrg(1)=0.0
      Return
c
   10 Ena=Rmass*Ta
      IF (Ta .GT. TenMeV) Ena=RCKE(Kn,K12C,Ta)
      Eca=Ta-Ena
```

```
      Vnca=VELOCITY(Kn,Ena)
      Vcca=VELOCITY(K12C,Eca)
c
c O5S treats inelastic scattering as isotropic for all incident
c  neutron energies.  We will not do the same but will instead
c  use a relatively crude grid of Legendre coefficients to get
c  a handle on the angular distribution of the scattered neutrons.
c
      Fi(1)=EXTERP(A1,B1,En,Ipoly,Nterp)
      Fi(2)=EXTERP(A1,B2,En,Ipoly,Nterp)
      Fi(3)=EXTERP(A1,B3,En,Ipoly,Nterp)
      Fi(4)=EXTERP(A1,B4,En,Ipoly,Nterp)
      Fmu=CHOOSL(Fi,Nfi)
      Sinpsi=SQRT(1.0 - Fmu*Fmu)
      Phi=6.283185*RAN(Irx)
      Xpn=Sinpsi*COS(Phi)
      Ypn=Sinpsi*SIN(Phi)
      Zpn=Fmu
      CALL CSCAT
c
      Nelm=3
      CALL BANKR2
c Now to check for possible Compton scattering of photon in detector
      Egamma=Q
      CALL PHOTON(Egamma)
      Return
      END
```

```
C   This is file INPUT.FOR
C     Purpose is to read input data file to start the computation
c
      Subroutine INPUT
      Common /TITL/ Nhist,Title(20)
      Common /MAXWEL/ Esourc,E1,T
      Common /RANDM/ Irx
      Common /LTABLE/ Itab,Ene(124),Hydl(124),Carl(124),Alpl(124),
     x Dlight(124)
      Common /NBOXES/ Wbox
      Common /PROTON/ Nprt,Range(80),Epr(80)
      Common /TRY/ Tries(8,100000)
      Common /NAID/ Radius,Height,Rcolim,Rdummy
      Common /DENS/ Apb(2)
      Common /CUTOFF/ Ecutoff
      Common /GFLAG/ Igflag
      Common /GAMATN/ Grho
c
      Dimension Apb110(2),Apb213(2)
      Data Index/2/, Im1/-1/
      Data Apb110/0.05237,0.04743/
c "Attenuation" densities for H and C in (atoms/barn)/cm for NE-110
c   based on a density of 1.032 gm/cm**3 and H:C ratio of 1.104
      Data Apb213/0.04833,0.03984/
c Similarly for NE-213 based on a density of 0.874 gm/cm**3 and
c   H:C ratio of 1.213
c
CARD READ NO. 1   ---  a title, up to 80 characters
      Read (20,100,End=99) (Title(I),I=1,20)
  100 Format(20A4)
      Write (21,101) (Title(I),I=1,20)
  101 Format (1H ,20A4)
c
CARD READ NO. 2   --- (1)  No. of histories;
c (2) Scintillator type - either 110. or 213. (or -213.; see
c     comment below) for NE-110 or NE-213, respectively;
c (3) Light attenuation factor (in cm**-1) for light attenuation
c     by the scintillator, based on a report by Kuijper et al.
c     Nucl. Instrum. Methods 42 (1966) 56-60.  A typical value
c       for NE-213 is approx. 0.03, if the scintillator contain-
c     ment walls have good reflection.
      Igflag=0
      Read (20,102,End=99) Nhist,Scntyp,Grho
  102 Format(I,2F)
      IF (Scntyp .EQ. 213.) goto 3
      IF (Scntyp .EQ. 110.) goto 92
c
c If program counter gets to here, input SCNTYP was -213., indicating
c   a desire to use "pulse-shape-discrimination" computer methods to
c   exclude events which result in gamma rays being detected.
```

```
      Igflag=1
      Scntyp=213.
      Goto 3
c
   92 Apb(1)=Apb110(1)
      Apb(2)=Apb110(2)
c Change -RANGE- values for NE-110
      Do 1 I=1,Nprt
    1 Range(I)=0.8546*Range(I)
c Change -GRHO- for denser NE-110
      Grho=Grho*1.19
c
      Do 33 I=2,124
      Aux=3.0
      IF (Ene(I) .GT. 0.081) goto 2
      Aux=1.0+2.0*Ene(I)/0.081
c    GLMorgan had added the factor of 3 increase in Carbon light;
c     spectra obtained with a 12-mm thick NE-110 detector support
c     some increase in carbon light, but how much is uncertain.
c     They also support some increase in alpha light.
    2 Carl(I)=Carl(I)*Aux
      Alpl(I)=1.75*Alpl(I)
      Dlight(I)=1.52*Dlight(I)
   33 Continue
c
      Goto 4
    3 Apb(1)=Apb213(1)
      Apb(2)=Apb213(2)
c
CARD READ NO. 3   ---  Neutron source energy information
    4 Read (20,104,End=99) Esourc,E1,T,Ecutoff
  104 Format(4F)
c (Neutron energies in MeV...)
c If input neutron energy < threshold for photon production
c   set flag IGFLAG.
      IF (Esourc .LE. 4.805) Igflag=1
      Isc=IFIX(Scntyp+0.0001)
      IF (T .EQ. 0.0) goto 6
      IF (Esourc .GE. E1) goto 7
      Zz=E1
      E1=Esourc
      Esourc=Zz
      IF (Esourc .LE. 4.805) Igflag=1
    7 IF (Esourc .LT. 0.15) Write (21,105) Esourc, E1
  105 Format(23H Upper Energy of Group ,1PE13.5,4H MeV/
     X       23H Lower Energy of Group ,1PE13.5,4H MeV)
      IF (Esourc .GE. 0.15) Write (21,205) Esourc, E1
  205 Format(23H Upper Energy of Group ,0PF9.4,4H MeV/
     x       23H Lower Energy of Group ,0PF9.4,4H MeV)
      IF (T.LT.0.0) goto 8
```

```
      Write (21,106) T
  106 Format(23H Maxwellian Avg. Temp.  ,0PF9.4,4H MeV)
      Go to 8
    6 IF (Esourc .LT. 0.1) Write (21,107) Esourc
  107 Format(32H Monoenergetic Source Energy is  1PE13.5,4H MeV)
      IF (Esourc .GE. 0.1) Write (21,207) Esourc
  207 Format(32H Monoenergetic Source Energy is  0PF9.4,4H MeV)
    8 IF (Ecutoff .LT. 10000.0) Write (21,108) Isc,Grho,Ecutoff
  108 Format(22H Scintillator Type NE-,I3,12x,
     W  'Light-attenuation factor is'F7.4,'/cm'/
     X       22H Low-energy Cut-off = ,0PF9.4,4H MeV)
      IF (Ecutoff .GE. 10000.0) Write (21,208) Isc, Grho, Ecutoff
  208 Format (22H Scintillator Type NE-,I3,12x,
     W       27HLight-attenuation factor is,F7.4,3H/cm /
     X        22H Low-energy Cut-off = ,1PE12.5,4H MeV/
     Y     6x,25HWhich Seems AWFULLY High  ,14x,9H<---***--  )
c
CARD READ NO. 4   ---  Starting random number (if < 0 program chooses one)
      Read (20,109) Irx
  109 Format(I)
      IF (Irx .LT. 0) goto 9
      CALL SEED(IM1)
      Goto 10
    9 Call SEED(Index)
   10 Write (21,110) Irx
  110 Format(23H Initial Random Seed =  ,I11,10H (Base 10) )
c
CARD READ NO. 5   ---   source position
      Read (20,114) Xsourc,Ysourc,Zsourc
  114 Format(3F)
      Write (21,111) Xsourc,Ysourc,Zsourc
  111 Format(22H Neutron Source is at  /6x,2HX=,0PF9.3,4H cm,,
     X  6x,2HY=,F9.3,4H cm,,6x,2HZ=,F9.3,3H cm/10x,
     Y  57HWhere the front face of the detector is in the X-Y plane. )
      Tries(1,1)=Xsourc
      Tries(2,1)=Ysourc
      Tries(3,1)=Zsourc
c
CARD READ NO. 6   ---   detector information
      Read (20,114) Radius, Height, Rcolim
      Write (21,112) Radius,Height,Rcolim
  112 Format(24H Geometry Specifications /6x,9HRadius = ,0PF8.5,3H cm,
     X 6x,9HHeight = ,F8.5,3H cm/6x,20HCollimator radius = ,F8.5,3H cm)
c
CARD READ NO. 7   --- Light-unit binning variable (if < 0 program chooses)
      Read (20,113) Wbox
  113 Format(F)
      If (Wbox .GT. 0.0) goto 15
c If variable -WBOX- .LE. 0.0 then compute a value so as
c to use most of the 475 light-unit bins.
```

```
      Ulu=1.05*ETOL(Index,Esourc)
c If photon interactions are to be included be sure that the variable
c   -WBOX- allows their inclusion.
      IF (Igflag .EQ. 0) Ulu=Ulu+4.0
      Wbox = Sqrt(Ulu)/471.
   15 Write (21,115) Wbox
  115 Format(31H L.U. width parameter -WBOX- = ,1PE13.5)
      Return
   99 Stop ' No more input data '
      END
```

```
c    This is file INTERACT.FOR
c
c        Purpose is to determine if an interaction took place along the
c   initial flight path of the neutron (from the source) in the
c   detector.  If not, NINDX = 0; if so, NINDX = 1, and the position
c    of the interaction and the neutron energy and type of interaction
c   will be stored in the TRIES array.
c
      Subroutine INTERACT(N,Nindx)
c               (The variable N is the running index of interactions)
      Common /RANDM/ Irx
      Common /TRY/ Tries (8,100000)
      Common /MAXWEL/ Eu,Elow,T
      Common /NAID/ Rdet,Ht,Rcolim,R
      Common /PROB/ P(12)
      Dimension Enn(41),Sn(41)
      Data Indx/0/, Pi/3.1415927/
c
      Nindx=0
      M=N
      X=Tries(1,M)
      Y=Tries(2,M)
      Z=Tries(3,M)
      U=Tries(4,M)
      V=Tries(5,M)
      W=Tries(6,M)
      Flgt=PLNGTH(U,V,W, X,Y,Z, Rdet,Ht)
      Totx=P(2)
      IF (Indx .GT. 0) goto 6
c If INDX is > 0 then using the same neutron energy as the last
c time through this routine, so skip over intermediate steps.
      Eneut=Eu
      IF (T .EQ. 0.0) goto 5
c Next steps are to choose the initial neutron energy from a
c preselected distribution.  For T > 0.0 the energy is chosen
c from a Maxwellian distribution.  For T < 0.0 the energy is
c chosen from a uniform distribution.  However, there is a
c slight variation in the latter in this particular coding;
c a small skew toward smaller energies is included so as to
c better represent the source flux of neutrons from the ORELA
c for comparisons with response measurements taken with this
c flux.
c
      IF (T .GT. 0.0) goto 2
      R1=RAN(Irx)
      R1=R1**1.2
c The power 1.2 gives the skewing close enough.
      En=(Eu-Elow)*R1 + Elow
      Goto 4
c
```

```
c Next is Maxwellian choice:
    2 En=CHOOSM(Elow,Eu,T)
c
    4 Eneut=En
    5 Totx=TOTALX(Eneut)
c
c       Now check for interactions along path -- use function IBOX
    6 Indx=1
      Itype=IBOX(Flgt,Totx,Dist)
      IF (Itype .LE. 0) Return
      Tries(1,M)=X+U*Dist
      Tries(2,M)=Y+V*Dist
      Tries(3,M)=Z+W*Dist
      Tries(7,M)=Eneut
      Tries(8,M)=FLOAT(Itype)+0.00001
      Nindx=1
      IF (T .NE. 0.0) Indx=0
      Return
      END
```

```
C   This is file LABTRAN.FOR
c
      Subroutine LABTRAN(Vxp,Vyp,Vzp, V, Vx,Vy,Vz)
c
c Given velocity components Vxp, Vyp, and Vzp in the "primed"
c  coordinate system which is moving with velocity V along the
c  Z-axis of the laboratory system, compute the relativistically
c  correct velocity components Vx, Vy, and Vz of the velocity
c  in the laboratory system.
c
      Real*8 Vxx,Vyy,Vzz,Vv,Beta,C,Denom,D1,Sqr
      Data D1/1.0D+0/, C/2.99792458D+10/
c
      Vxx=Vxp
      Vyy=Vyp
      Vzz=Vzp
      Vv=V
      Beta=Vv/C
      Denom=D1+Beta*Vzz/C
      Sqr=DSQRT(D1-Beta*Beta)
      Vxx=Vxx*Sqr/Denom
      Vyy=Vyy*Sqr/Denom
      Vzz=(Vzz+Vv)/Denom
      Vx=Vxx
      Vy=Vyy
      Vz=Vzz
      Return
      END
```

```
c   This is file LEGENDRE.FOR
c
c    These are block data for  n + 12-C  elastic scattering angular
c  distributions.  For E(neut) (lab) up to 20 MeV these are data
c  in ENDF/B-V.  For the three higher energies, the values are
c  taken from fits to data exhibited in Phys. Med. Bio. 29 (1984) 643.
C
       BLOCK DATA LEGNDR
      COMMON /LGNDRE/ IC, E(220),F(6,220)
      DATA IC /220/
      DATA E /
     &.10000E-10,.10000E-02,.50000E-02,.10000E-01,.50000E-01,.10000E+00,
     &.20000E+00,.30000E+00,.40000E+00,.50000E+00,.60000E+00,.70000E+00,
     &.80000E+00,.90000E+00,.10000E+01,.11000E+01,.12000E+01,.13000E+01,
     &.14000E+01,.15000E+01,.16000E+01,.17000E+01,.18000E+01,.18500E+01,
     &.19000E+01,.19250E+01,.19500E+01,.19600E+01,.19700E+01,.19800E+01,
     &.19900E+01,.20000E+01,.20200E+01,.20400E+01,.20600E+01,.20700E+01,
     &.20800E+01,.20900E+01,.21000E+01,.21100E+01,.21200E+01,.21300E+01,
     &.21400E+01,.21500E+01,.23000E+01,.24500E+01,.26000E+01,.27500E+01,
     &.27800E+01,.28000E+01,.28050E+01,.28100E+01,.28150E+01,.28200E+01,
     &.28300E+01,.28400E+01,.28800E+01,.29000E+01,.29200E+01,.29400E+01,
     &.29600E+01,.29800E+01,.30000E+01,.30200E+01,.30400E+01,.30800E+01,
     &.31200E+01,.32000E+01,.33000E+01,.34000E+01,.35000E+01,.36000E+01,
     &.37000E+01,.38000E+01,.39000E+01,.40000E+01,.40500E+01,.41000E+01,
     &.41500E+01,.42000E+01,.42500E+01,.43000E+01,.43500E+01,.44000E+01,
     &.44500E+01,.45000E+01,.46000E+01,.47000E+01,.48000E+01,.48800E+01,
     &.49000E+01,.49200E+01,.49250E+01,.49300E+01,.49350E+01,.49400E+01,
     &.49600E+01,.49800E+01,.50000E+01,.52000E+01,.52500E+01,.52850E+01,
     &.53000E+01,.53200E+01,.53250E+01,.53500E+01,.53600E+01,.53650E+01,
     &.53800E+01,.54000E+01,.54200E+01,.54700E+01,.55000E+01,.55500E+01,
     &.57000E+01,.59500E+01,.60500E+01,.61000E+01,.61500E+01,.61850E+01,
     &.62000E+01,.62100E+01,.62250E+01,.62300E+01,.62500E+01,.62600E+01,
     &.62750E+01,.62850E+01,.63000E+01,.63100E+01,.63200E+01,.63250E+01,
     &.63400E+01,.63500E+01,.63600E+01,.63900E+01,.64000E+01,.64300E+01,
     &.64500E+01,.64600E+01,.64700E+01,.64800E+01,.64900E+01,.65000E+01,
     &.65300E+01,.65400E+01,.65500E+01,.65700E+01,.66000E+01,.66100E+01,
     &.66200E+01,.66500E+01,.66800E+01,.67000E+01,.67300E+01,.68000E+01,
     &.68500E+01,.69500E+01,.69700E+01,.70000E+01,.70500E+01,.71100E+01,
     &.71300E+01,.71500E+01,.71600E+01,.71700E+01,.72000E+01,.72500E+01,
     &.73000E+01,.73250E+01,.73500E+01,.73900E+01,.74000E+01,.74400E+01,
     &.74500E+01,.75000E+01,.75500E+01,.75800E+01,.76000E+01,.76350E+01,
     &.76700E+01,.77000E+01,.77400E+01,.77500E+01,.77700E+01,.77800E+01,
     &.77900E+01,.78000E+01,.78100E+01,.78300E+01,.78500E+01,.80000E+01,
     &.81500E+01,.82000E+01,.82500E+01,.83500E+01,.84500E+01,.85000E+01,
     &.87050E+01,.90000E+01,.95000E+01,.10000E+02,.10500E+02,.11000E+02,
     &.11500E+02,.12000E+02,.12500E+02,.13000E+02,.13500E+02,.14000E+02,
     &.14500E+02,.15000E+02,.16000E+02,.17000E+02,.18000E+02,.19000E+02,
     &.20000E+02, 20.8, 26.0, 40.0/
C
        DATA ((F(I,J),I=1,6),J=1,25)/
```

```
& 0.00000E+00, 0.00000E+00, 0.00000E+00,
& 0.00000E+00, 0.00000E+00, 0.00000E+00,
& 0.14011E-03, 0.00000E+00, 0.00000E+00,
& 0.00000E+00, 0.00000E+00, 0.00000E+00,
& 0.69820E-03, 0.00000E+00, 0.00000E+00,
& 0.00000E+00, 0.00000E+00, 0.00000E+00,
& 0.13906E-02, 0.00000E+00, 0.00000E+00,
& 0.00000E+00, 0.00000E+00, 0.00000E+00,
& 0.67282E-02, 0.74988E-04, 0.00000E+00,
& 0.00000E+00, 0.00000E+00, 0.00000E+00,
& 0.12923E-01, 0.27931E-03, 0.00000E+00,
& 0.00000E+00, 0.00000E+00, 0.00000E+00,
& 0.23883E-01, 0.97357E-03, 0.00000E+00,
& 0.00000E+00, 0.00000E+00, 0.00000E+00,
& 0.33165E-01, 0.19172E-02, 0.63380E-04,
& 0.00000E+00, 0.00000E+00, 0.00000E+00,
& 0.40990E-01, 0.29952E-02, 0.12848E-03,
& 0.00000E+00, 0.00000E+00, 0.00000E+00,
& 0.47529E-01, 0.41298E-02, 0.22415E-03,
& 0.00000E+00, 0.00000E+00, 0.00000E+00,
& 0.52916E-01, 0.52714E-02, 0.34924E-03,
& 0.00000E+00, 0.00000E+00, 0.00000E+00,
& 0.57252E-01, 0.63923E-02, 0.49974E-03,
&-0.57108E-04, 0.00000E+00, 0.00000E+00,
& 0.60616E-01, 0.74832E-02, 0.66841E-03,
&-0.10257E-03, 0.00000E+00, 0.00000E+00,
& 0.63065E-01, 0.85502E-02, 0.84457E-03,
&-0.17208E-03, 0.00000E+00, 0.00000E+00,
& 0.64638E-01, 0.96140E-02, 0.10135E-02,
&-0.27366E-03, 0.00000E+00, 0.00000E+00,
& 0.65355E-01, 0.10710E-01, 0.11562E-02,
&-0.41675E-03, 0.00000E+00, 0.00000E+00,
& 0.65220E-01, 0.11887E-01, 0.12476E-02,
&-0.61223E-03, 0.00000E+00, 0.00000E+00,
& 0.64218E-01, 0.13213E-01, 0.12560E-02,
&-0.87217E-03, 0.00000E+00, 0.00000E+00,
& 0.62315E-01, 0.14775E-01, 0.11394E-02,
&-0.12092E-02, 0.61831E-04, 0.00000E+00,
& 0.59450E-01, 0.16680E-01, 0.84180E-03,
&-0.16345E-02, 0.89279E-04, 0.00000E+00,
& 0.55528E-01, 0.19063E-01, 0.28256E-03,
&-0.21536E-02, 0.12619E-03, 0.00000E+00,
& 0.50385E-01, 0.22081E-01,-0.66742E-03,
&-0.27532E-02, 0.17476E-03, 0.00000E+00,
& 0.43701E-01, 0.25897E-01,-0.22609E-02,
&-0.33576E-02, 0.23674E-03, 0.00000E+00,
& 0.39559E-01, 0.28143E-01,-0.34747E-02,
&-0.35833E-02, 0.27253E-03, 0.00000E+00,
& 0.34589E-01, 0.30612E-01,-0.52021E-02,
&-0.36296E-02, 0.31000E-03, 0.00000E+00/
```

```
      DATA ((F(I,J),I=1,6),J=26,50) /
     & 0.31624E-01, 0.31924E-01,-0.63914E-02,
     &-0.35053E-02, 0.32820E-03, 0.00000E+00,
     & 0.28147E-01, 0.33294E-01,-0.79505E-02,
     &-0.31843E-02, 0.34451E-03, 0.00000E+00,
     & 0.26550E-01, 0.33863E-01,-0.87269E-02,
     &-0.29673E-02, 0.34999E-03, 0.00000E+00,
     & 0.24790E-01, 0.34453E-01,-0.96255E-02,
     &-0.26751E-02, 0.35449E-03, 0.00000E+00,
     & 0.22820E-01, 0.35077E-01,-0.10682E-01,
     &-0.22814E-02, 0.35761E-03, 0.00000E+00,
     & 0.20574E-01, 0.35757E-01,-0.11949E-01,
     &-0.17464E-02, 0.35876E-03, 0.00000E+00,
     & 0.17948E-01, 0.36542E-01,-0.13506E-01,
     &-0.10079E-02, 0.35702E-03, 0.00000E+00,
     & 0.10797E-01, 0.38940E-01,-0.18061E-01,
     & 0.15711E-02, 0.33794E-03, 0.00000E+00,
     &-0.20627E-02, 0.46005E-01,-0.26880E-01,
     & 0.79342E-02, 0.26785E-03, 0.00000E+00,
     &-0.35183E-01, 0.96915E-01,-0.49691E-01,
     & 0.32880E-01, 0.00000E+00, 0.00000E+00,
     &-0.60305E-01, 0.27559E+00,-0.61130E-01,
     & 0.77912E-01,-0.35190E-03, 0.00000E+00,
     & 0.54072E-01, 0.42562E+00, 0.35823E-01,
     & 0.44666E-01, 0.52985E-03, 0.00000E+00,
     & 0.77445E-01, 0.19784E+00, 0.44762E-01,
     &-0.10256E-01, 0.94775E-03, 0.00000E+00,
     & 0.63154E-01, 0.12317E+00, 0.30788E-01,
     &-0.17406E-01, 0.91420E-03, 0.00000E+00,
     & 0.52841E-01, 0.96240E-01, 0.22028E-01,
     &-0.17897E-01, 0.87527E-03, 0.00000E+00,
     & 0.45834E-01, 0.84015E-01, 0.16513E-01,
     &-0.17438E-01, 0.85294E-03, 0.00000E+00,
     & 0.40733E-01, 0.77678E-01, 0.12757E-01,
     &-0.16914E-01, 0.84260E-03, 0.00000E+00,
     & 0.36770E-01, 0.74179E-01, 0.10022E-01,
     &-0.16482E-01, 0.84020E-03, 0.00000E+00,
     & 0.33525E-01, 0.72239E-01, 0.79238E-02,
     &-0.16156E-01, 0.84324E-03, 0.00000E+00,
     & 0.62067E-02, 0.84697E-01,-0.46031E-02,
     &-0.16971E-01, 0.11097E-02, 0.00000E+00,
     &-0.15727E-01, 0.11803E+00,-0.11828E-01,
     &-0.20894E-01, 0.15418E-02, 0.00000E+00,
     &-0.36559E-01, 0.16847E+00,-0.18632E-01,
     &-0.25506E-01, 0.20407E-02, 0.00000E+00,
     &-0.47913E-01, 0.24159E+00,-0.22075E-01,
     &-0.29241E-01, 0.21029E-02, 0.00000E+00,
     &-0.43743E-01, 0.25907E+00,-0.20197E-01,
     &-0.30103E-01, 0.15532E-02, 0.61947E-04,
     &-0.28166E-01, 0.26849E+00,-0.13528E-01,
```

```
&-0.32241E-01,-0.21437E-03, 0.20818E-03/
   DATA ((F(I,J),I=1,6),J=51,75)/
&-0.13929E-01, 0.26828E+00,-0.71639E-02,
&-0.34018E-01,-0.17762E-02, 0.33610E-03,
& 0.30595E-01, 0.26054E+00, 0.14740E-01,
&-0.38154E-01,-0.63259E-02, 0.71018E-03,
& 0.10102E+00, 0.28222E+00, 0.18667E+00,
& 0.64051E-01, 0.10858E-01,-0.54770E-03,
&-0.11610E+00, 0.31003E+00,-0.41429E-01,
&-0.11141E-01, 0.11611E-01,-0.74585E-03,
&-0.76780E-01, 0.30548E+00,-0.31554E-01,
&-0.21945E-01, 0.59704E-02,-0.29350E-03,
&-0.66288E-01, 0.31086E+00,-0.27855E-01,
&-0.23491E-01, 0.47364E-02,-0.19503E-03,
&-0.46647E-01, 0.34458E+00,-0.19399E-01,
&-0.21409E-01, 0.33409E-02,-0.99015E-04,
&-0.33850E-01, 0.36445E+00,-0.13283E-01,
&-0.17719E-01, 0.28564E-02,-0.81989E-04,
&-0.12984E-01, 0.38360E+00,-0.30164E-02,
&-0.11111E-01, 0.21751E-02,-0.69374E-04,
& 0.24035E-01, 0.39194E+00, 0.15780E-01,
& 0.94189E-03, 0.10389E-02,-0.60773E-04,
& 0.87275E-01, 0.35021E+00, 0.49476E-01,
& 0.21660E-01,-0.81547E-03,-0.65698E-04,
& 0.14055E+00, 0.18448E+00, 0.82260E-01,
& 0.39004E-01,-0.21678E-02,-0.11007E-03,
& 0.78723E-01, 0.40297E-01, 0.56224E-01,
& 0.18446E-01, 0.00000E+00, 0.00000E+00,
&-0.48864E-02, 0.66214E-01, 0.13522E-01,
&-0.90949E-02, 0.26058E-02,-0.16588E-03,
&-0.45902E-01, 0.12959E+00,-0.89423E-02,
&-0.22539E-01, 0.38383E-02,-0.15366E-03,
&-0.70098E-01, 0.21934E+00,-0.23488E-01,
&-0.30369E-01, 0.45766E-02,-0.13402E-03,
&-0.72297E-01, 0.27160E+00,-0.25723E-01,
&-0.30953E-01, 0.46885E-02,-0.12334E-03,
&-0.62053E-01, 0.33097E+00,-0.21337E-01,
&-0.27232E-01, 0.44871E-02,-0.11382E-03,
&-0.40777E-01, 0.36825E+00,-0.10147E-01,
&-0.19502E-01, 0.38918E-02,-0.11154E-03,
&-0.16572E-01, 0.38230E+00, 0.39313E-02,
&-0.10273E-01, 0.30287E-02,-0.11634E-03,
& 0.67391E-02, 0.38034E+00, 0.19113E-01,
&-0.58746E-03, 0.19750E-02,-0.12861E-03,
& 0.26326E-01, 0.36741E+00, 0.34108E-01,
& 0.88341E-02, 0.80500E-03,-0.14952E-03,
& 0.40168E-01, 0.34751E+00, 0.48019E-01,
& 0.17593E-01,-0.42459E-03,-0.18031E-03,
& 0.46705E-01, 0.32332E+00, 0.60218E-01,
& 0.25589E-01,-0.16814E-02,-0.22222E-03,
```

```
     & 0.44481E-01, 0.29578E+00, 0.70007E-01,
     & 0.32971E-01,-0.29549E-02,-0.27657E-03/
       DATA ((F(I,J),I=1,6),J=76,100)/
     & 0.33608E-01, 0.26270E+00, 0.75760E-01,
     & 0.40105E-01,-0.42390E-02,-0.34410E-03,
     & 0.28649E-01, 0.24144E+00, 0.75771E-01,
     & 0.43674E-01,-0.48635E-02,-0.38144E-03,
     & 0.35068E-01, 0.21374E+00, 0.72274E-01,
     & 0.47017E-01,-0.54139E-02,-0.41658E-03,
     & 0.81827E-01, 0.17730E+00, 0.64112E-01,
     & 0.48987E-01,-0.57314E-02,-0.43758E-03,
     & 0.21365E+00, 0.14195E+00, 0.55898E-01,
     & 0.46744E-01,-0.55866E-02,-0.42680E-03,
     & 0.37952E+00, 0.13808E+00, 0.62233E-01,
     & 0.40288E-01,-0.52980E-02,-0.40759E-03,
     & 0.44461E+00, 0.16064E+00, 0.80988E-01,
     & 0.36307E-01,-0.55954E-02,-0.43560E-03,
     & 0.43050E+00, 0.17880E+00, 0.97444E-01,
     & 0.36235E-01,-0.63249E-02,-0.50010E-03,
     & 0.39809E+00, 0.18667E+00, 0.10869E+00,
     & 0.37708E-01,-0.71495E-02,-0.57577E-03,
     & 0.36838E+00, 0.18805E+00, 0.11650E+00,
     & 0.39460E-01,-0.79622E-02,-0.65449E-03,
     & 0.34466E+00, 0.18601E+00, 0.12236E+00,
     & 0.41100E-01,-0.87514E-02,-0.73543E-03,
     & 0.31151E+00, 0.17745E+00, 0.13099E+00,
     & 0.43785E-01,-0.10298E-01,-0.90741E-03,
     & 0.28997E+00, 0.16662E+00, 0.13728E+00,
     & 0.45753E-01,-0.11871E-01,-0.10993E-02,
     & 0.27433E+00, 0.15454E+00, 0.14127E+00,
     & 0.47200E-01,-0.13551E-01,-0.13199E-02,
     & 0.26290E+00, 0.14104E+00, 0.13845E+00,
     & 0.48329E-01,-0.15130E-01,-0.15339E-02,
     & 0.25907E+00, 0.13397E+00, 0.13224E+00,
     & 0.48853E-01,-0.15677E-01,-0.16052E-02,
     & 0.25282E+00, 0.11273E+00, 0.10271E+00,
     & 0.50113E-01,-0.16651E-01,-0.17219E-02,
     & 0.25252E+00, 0.95467E-01, 0.71494E-01,
     & 0.50491E-01,-0.17088E-01,-0.17714E-02,
     & 0.28510E+00, 0.69485E-01,-0.16901E-01,
     & 0.45508E-01,-0.16106E-01,-0.16737E-02,
     & 0.36293E+00, 0.23091E+00, 0.18762E+00,
     & 0.28516E-01,-0.89499E-02,-0.93233E-03,
     & 0.29646E+00, 0.19665E+00, 0.20709E+00,
     & 0.40482E-01,-0.12977E-01,-0.13551E-02,
     & 0.26574E+00, 0.15642E+00, 0.17270E+00,
     & 0.46306E-01,-0.15567E-01,-0.16416E-02,
     & 0.26018E+00, 0.14753E+00, 0.16541E+00,
     & 0.47138E-01,-0.16277E-01,-0.17332E-02,
     & 0.24600E+00, 0.12440E+00, 0.10800E+00,
```

```
& 0.40000E-01,-0.30000E-02, 0.00000E+00,
& 0.23500E+00, 0.10630E+00, 0.92000E-01,
& 0.37160E-01,-0.56700E-02, 0.00000E+00/
   DATA ((F(I,J),I=1,6),J=101,125)/
& 0.23400E+00, 0.10295E+00, 0.77000E-01,
& 0.36450E-01,-0.65000E-02, 0.00000E+00,
& 0.23960E+00, 0.10060E+00, 0.50000E-01,
& 0.35950E-01,-0.70800E-02, 0.00000E+00,
& 0.24200E+00, 0.10000E+00, 0.47000E-01,
& 0.35740E-01,-0.73300E-02, 0.00000E+00,
& 0.29320E+00, 0.10400E+00, 0.46330E-01,
& 0.35450E-01,-0.76700E-02, 0.00000E+00,
& 0.30600E+00, 0.11700E+00, 0.47000E-01,
& 0.35380E-01,-0.77500E-02, 0.00000E+00,
& 0.37000E+00, 0.18200E+00, 0.80130E-01,
& 0.34720E-01,-0.81700E-02, 0.00000E+00,
& 0.38100E+00, 0.18467E+00, 0.93380E-01,
& 0.34450E-01,-0.83300E-02, 0.00000E+00,
& 0.38050E+00, 0.18600E+00, 0.10000E+00,
& 0.34320E-01,-0.84200E-02, 0.00000E+00,
& 0.37900E+00, 0.19000E+00, 0.10943E+00,
& 0.33920E-01,-0.86700E-02, 0.00000E+00,
& 0.31950E+00, 0.18831E+00, 0.12200E+00,
& 0.33390E-01,-0.90000E-02, 0.00000E+00,
& 0.26000E+00, 0.18663E+00, 0.12680E+00,
& 0.32860E-01,-0.96000E-02, 0.00000E+00,
& 0.22500E+00, 0.18241E+00, 0.13640E+00,
& 0.31530E-01,-0.11100E-01, 0.00000E+00,
& 0.21862E+00, 0.17987E+00, 0.14000E+00,
& 0.30730E-01,-0.12000E-01, 0.00000E+00,
& 0.20800E+00, 0.17566E+00, 0.14025E+00,
& 0.29400E-01,-0.13500E-01, 0.00000E+00,
& 0.19433E+00, 0.16300E+00, 0.14100E+00,
& 0.24600E-01,-0.18000E-01, 0.00000E+00,
& 0.17156E+00, 0.16150E+00, 0.14400E+00,
& 0.16600E-01,-0.28000E-01, 0.00000E+00,
& 0.16300E+00, 0.16300E+00, 0.16000E+00,
& 0.14000E-01,-0.32940E-01, 0.00000E+00,
& 0.15500E+00, 0.16700E+00, 0.17900E+00,
& 0.13000E-01,-0.35880E-01, 0.20000E-02,
& 0.13692E+00, 0.17100E+00, 0.19800E+00,
& 0.14000E-01,-0.38820E-01, 0.70000E-02,
& 0.12427E+00, 0.17931E+00, 0.21641E+00,
& 0.16000E-01,-0.40000E-01, 0.13130E-01,
& 0.11885E+00, 0.18287E+00, 0.22430E+00,
& 0.20800E-01,-0.40000E-01, 0.17000E-01,
& 0.11523E+00, 0.18525E+00, 0.22956E+00,
& 0.24000E-01,-0.38400E-01, 0.20000E-01,
& 0.10981E+00, 0.18881E+00, 0.23744E+00,
& 0.46800E-01,-0.36000E-01, 0.24500E-01,
```

```
     & 0.10800E+00, 0.19000E+00, 0.24007E+00,
     & 0.54400E-01,-0.29700E-01, 0.26000E-01,
     & 0.10600E+00, 0.20500E+00, 0.25059E+00,
     & 0.84800E-01,-0.45000E-02, 0.32000E-01/
       DATA ((F(I,J),I=1,6),J=126,150)/
     & 0.11200E+00, 0.21250E+00, 0.25585E+00,
     & 0.10000E+00, 0.81000E-02, 0.32800E-01,
     & 0.14920E+00, 0.22650E+00, 0.26374E+00,
     & 0.12280E+00, 0.27000E-01, 0.34000E-01,
     & 0.17400E+00, 0.23950E+00, 0.26900E+00,
     & 0.13800E+00, 0.39600E-01, 0.33200E-01,
     & 0.21120E+00, 0.25900E+00, 0.26800E+00,
     & 0.16080E+00, 0.58500E-01, 0.32000E-01,
     & 0.23600E+00, 0.27200E+00, 0.26734E+00,
     & 0.17600E+00, 0.71100E-01, 0.29800E-01,
     & 0.26080E+00, 0.28500E+00, 0.26667E+00,
     & 0.18200E+00, 0.83700E-01, 0.27600E-01,
     & 0.27320E+00, 0.28700E+00, 0.26500E+00,
     & 0.18200E+00, 0.90000E-01, 0.26500E-01,
     & 0.31040E+00, 0.29300E+00, 0.23500E+00,
     & 0.18200E+00, 0.92000E-01, 0.23200E-01,
     & 0.33520E+00, 0.29100E+00, 0.21500E+00,
     & 0.18200E+00, 0.90000E-01, 0.21000E-01,
     & 0.36000E+00, 0.28900E+00, 0.20720E+00,
     & 0.17800E+00, 0.83500E-01, 0.18800E-01,
     & 0.36261E+00, 0.28300E+00, 0.18380E+00,
     & 0.15571E+00, 0.64000E-01, 0.12200E-01,
     & 0.36348E+00, 0.27675E+00, 0.17600E+00,
     & 0.14759E+00, 0.61360E-01, 0.10000E-01,
     & 0.36609E+00, 0.25800E+00, 0.17100E+00,
     & 0.12324E+00, 0.53450E-01, 0.34000E-02,
     & 0.36783E+00, 0.25667E+00, 0.17150E+00,
     & 0.10700E+00, 0.48180E-01,-0.10000E-02,
     & 0.36800E+00, 0.25600E+00, 0.17175E+00,
     & 0.10650E+00, 0.45550E-01,-0.20000E-02,
     & 0.38850E+00, 0.26850E+00, 0.17200E+00,
     & 0.10600E+00, 0.42910E-01,-0.30000E-02,
     & 0.40900E+00, 0.28100E+00, 0.17806E+00,
     & 0.10550E+00, 0.40270E-01,-0.40000E-02,
     & 0.42950E+00, 0.29350E+00, 0.18413E+00,
     & 0.10600E+00, 0.37640E-01,-0.43300E-02,
     & 0.45000E+00, 0.30600E+00, 0.19019E+00,
     & 0.11150E+00, 0.35000E-01,-0.46700E-02,
     & 0.45150E+00, 0.31000E+00, 0.21075E+00,
     & 0.12800E+00, 0.29600E-01,-0.43300E-02,
     & 0.45200E+00, 0.30900E+00, 0.21800E+00,
     & 0.12900E+00, 0.27800E-01,-0.40000E-02,
     & 0.45000E+00, 0.28583E+00, 0.21867E+00,
     & 0.13000E+00, 0.26000E-01,-0.25000E-02,
     & 0.39000E+00, 0.23950E+00, 0.22000E+00,
```

```
& 0.12800E+00, 0.22400E-01, 0.50000E-03,
& 0.30000E+00, 0.17000E+00, 0.19500E+00,
& 0.11675E+00, 0.17000E-01, 0.50000E-02,
& 0.27000E+00, 0.16000E+00, 0.18980E+00,
& 0.11300E+00, 0.15600E-01, 0.60000E-02/
   DATA ((F(I,J),I=1,6),J=151,175)/
& 0.26257E+00, 0.15000E+00, 0.18460E+00,
& 0.10925E+00, 0.14200E-01, 0.70000E-02,
& 0.24029E+00, 0.12000E+00, 0.16900E+00,
& 0.98000E-01, 0.10000E-01, 0.50000E-02,
& 0.21800E+00, 0.10500E+00, 0.15340E+00,
& 0.89000E-01, 0.58000E-02, 0.32000E-02,
& 0.21380E+00, 0.95000E-01, 0.14300E+00,
& 0.83000E-01, 0.30000E-02, 0.20000E-02,
& 0.20751E+00, 0.80000E-01, 0.13580E+00,
& 0.74000E-01,-0.30000E-03, 0.11400E-02,
& 0.19987E+00, 0.64830E-01, 0.11900E+00,
& 0.57000E-01,-0.80000E-02, 0.00000E+00,
& 0.19644E+00, 0.54000E-01, 0.11000E+00,
& 0.46000E-01,-0.12000E-01, 0.00000E+00,
& 0.19586E+00, 0.45000E-01, 0.87000E-01,
& 0.31000E-01,-0.14000E-01, 0.00000E+00,
& 0.19700E+00, 0.44200E-01, 0.81400E-01,
& 0.28600E-01,-0.14200E-01, 0.00000E+00,
& 0.20675E+00, 0.43000E-01, 0.73000E-01,
& 0.25000E-01,-0.13000E-01, 0.00000E+00,
& 0.22300E+00, 0.45000E-01, 0.57500E-01,
& 0.21000E-01,-0.10000E-01, 0.00000E+00,
& 0.26400E+00, 0.56800E-01, 0.40330E-01,
& 0.19000E-01,-0.52000E-02, 0.00000E+00,
& 0.29000E+00, 0.64400E-01, 0.37000E-01,
& 0.19000E-01,-0.36000E-02, 0.00000E+00,
& 0.31600E+00, 0.72000E-01, 0.37000E-01,
& 0.19000E-01,-0.20000E-02, 0.00000E+00,
& 0.32900E+00, 0.85600E-01, 0.37000E-01,
& 0.19400E-01,-0.10500E-02, 0.00000E+00,
& 0.34200E+00, 0.99200E-01, 0.39500E-01,
& 0.19800E-01,-0.10000E-03, 0.00000E+00,
& 0.40985E+00, 0.14000E+00, 0.47000E-01,
& 0.21000E-01, 0.27500E-02, 0.00000E+00,
& 0.52292E+00, 0.22667E+00, 0.70000E-01,
& 0.23000E-01, 0.75000E-02, 0.00000E+00,
& 0.63600E+00, 0.31333E+00, 0.10150E+00,
& 0.26000E-01, 0.12250E-01, 0.00000E+00,
& 0.64500E+00, 0.35667E+00, 0.11725E+00,
& 0.27500E-01, 0.14630E-01, 0.00000E+00,
& 0.63700E+00, 0.39500E+00, 0.13300E+00,
& 0.29000E-01, 0.17000E-01, 0.00000E+00,
& 0.51433E+00, 0.43000E+00, 0.15380E+00,
& 0.33000E-01, 0.20200E-01, 0.00000E+00,
```

```
     & 0.48367E+00, 0.43000E+00, 0.15900E+00,
     & 0.34000E-01, 0.21000E-01, 0.00000E+00,
     & 0.36100E+00, 0.44000E+00, 0.17420E+00,
     & 0.38000E-01, 0.21800E-01, 0.00000E+00,
     & 0.35367E+00, 0.44200E+00, 0.17800E+00,
     & 0.39000E-01, 0.22000E-01, 0.00000E+00/
       DATA ((F(I,J),I=1,6),J=176,200)/
     & 0.31700E+00, 0.43800E+00, 0.19150E+00,
     & 0.48000E-01, 0.22000E-01, 0.57000E-03,
     & 0.29800E+00, 0.41800E+00, 0.20500E+00,
     & 0.69180E-01, 0.22000E-01, 0.20000E-02,
     & 0.28660E+00, 0.40500E+00, 0.21014E+00,
     & 0.81880E-01, 0.22600E-01, 0.53000E-02,
     & 0.27900E+00, 0.40586E+00, 0.21357E+00,
     & 0.90350E-01, 0.23000E-01, 0.75000E-02,
     & 0.27220E+00, 0.40737E+00, 0.21957E+00,
     & 0.10518E+00, 0.30000E-01, 0.11350E-01,
     & 0.26800E+00, 0.41956E+00, 0.22557E+00,
     & 0.12000E+00, 0.45830E-01, 0.13670E-01,
     & 0.27010E+00, 0.43000E+00, 0.23071E+00,
     & 0.12480E+00, 0.59390E-01, 0.13500E-01,
     & 0.27500E+00, 0.47520E+00, 0.23757E+00,
     & 0.12925E+00, 0.77480E-01, 0.10690E-01,
     & 0.28125E+00, 0.48650E+00, 0.23929E+00,
     & 0.12988E+00, 0.82000E-01, 0.95400E-02,
     & 0.29375E+00, 0.50910E+00, 0.24271E+00,
     & 0.13112E+00, 0.86000E-01, 0.72300E-02,
     & 0.30000E+00, 0.52040E+00, 0.24443E+00,
     & 0.13175E+00, 0.86000E-01, 0.60800E-02,
     & 0.32091E+00, 0.53170E+00, 0.24614E+00,
     & 0.13238E+00, 0.86000E-01, 0.49200E-02,
     & 0.34182E+00, 0.54300E+00, 0.24786E+00,
     & 0.13300E+00, 0.84000E-01, 0.37700E-02,
     & 0.36273E+00, 0.54767E+00, 0.24957E+00,
     & 0.13307E+00, 0.82000E-01, 0.26200E-02,
     & 0.40455E+00, 0.55700E+00, 0.25300E+00,
     & 0.13320E+00, 0.74330E-01, 0.31000E-03,
     & 0.44636E+00, 0.55433E+00, 0.25643E+00,
     & 0.13333E+00, 0.66670E-01,-0.20000E-02,
     & 0.50000E+00, 0.50000E+00, 0.24000E+00,
     & 0.10000E+00, 0.24000E-01,-0.12000E-01,
     & 0.63370E+00, 0.52990E+00, 0.35260E+00,
     & 0.21080E+00, 0.80000E-01, 0.80000E-02,
     & 0.65480E+00, 0.53600E+00, 0.36120E+00,
     & 0.21800E+00, 0.80000E-01, 0.80000E-02,
     & 0.65100E+00, 0.50000E+00, 0.35230E+00,
     & 0.20670E+00, 0.66250E-01, 0.73300E-02,
     & 0.56740E+00, 0.44000E+00, 0.33210E+00,
     & 0.16890E+00, 0.40000E-01, 0.51100E-02,
     & 0.50330E+00, 0.40700E+00, 0.31870E+00,
```

```
& 0.14100E+00, 0.30000E-01, 0.40000E-02,
& 0.46000E+00, 0.36000E+00, 0.30000E+00,
& 0.11000E+00, 0.40000E-02, 0.10000E-02,
& 0.37450E+00, 0.33380E+00, 0.30190E+00,
& 0.10150E+00, 0.13710E-01, 0.16480E-01,
& 0.28000E+00, 0.23000E+00, 0.29000E+00,
& 0.90000E-01, 0.10000E-02, 0.50000E-02/
   DATA ((F(I,J),I=1,6),J=201,220)/
& 0.46000E+00, 0.38000E+00, 0.31000E+00,
& 0.14000E+00, 0.40000E-01, 0.50000E-02,
& 0.55000E+00, 0.42000E+00, 0.33000E+00,
& 0.15000E+00, 0.30000E-01, 0.60000E-02,
& 0.53000E+00, 0.43000E+00, 0.33000E+00,
& 0.13000E+00, 0.40000E-01, 0.35000E-01,
& 0.60000E+00, 0.46000E+00, 0.32000E+00,
& 0.13000E+00, 0.40000E-01, 0.10000E-01,
& 0.56000E+00, 0.44000E+00, 0.31000E+00,
& 0.14000E+00, 0.30000E-01, 0.20000E-01,
& 0.54000E+00, 0.41000E+00, 0.32000E+00,
& 0.14000E+00, 0.50000E-01, 0.30000E-01,
& 0.51000E+00, 0.40000E+00, 0.32000E+00,
& 0.16000E+00, 0.50000E-01, 0.20000E-01,
& 0.58000E+00, 0.46000E+00, 0.35000E+00,
& 0.18000E+00, 0.70000E-01, 0.30000E-01,
& 0.57000E+00, 0.44000E+00, 0.34000E+00,
& 0.18000E+00, 0.60000E-01, 0.20000E-01,
& 0.60000E+00, 0.45000E+00, 0.32000E+00,
& 0.20000E+00, 0.70000E-01, 0.40000E-01,
& 0.59000E+00, 0.47000E+00, 0.32000E+00,
& 0.20000E+00, 0.80000E-01, 0.40000E-01,
& 0.63000E+00, 0.46000E+00, 0.31000E+00,
& 0.20000E+00, 0.90000E-01, 0.47000E-01,
& 0.66000E+00, 0.48000E+00, 0.32000E+00,
& 0.21000E+00, 0.10000E+00, 0.20000E-01,
& 0.68000E+00, 0.49000E+00, 0.33000E+00,
& 0.20000E+00, 0.10700E+00, 0.50000E-01,
& 0.70000E+00, 0.49000E+00, 0.33000E+00,
& 0.20000E+00, 0.11100E+00, 0.50000E-01,
& 0.72000E+00, 0.51000E+00, 0.35000E+00,
& 0.20000E+00, 0.11200E+00, 0.43000E-01,
& 0.73000E+00, 0.52000E+00, 0.35000E+00,
& 0.20000E+00, 0.11300E+00, 0.40000E-01,
a 0.77009,     0.53175,     0.36398,
a 0.22328,     0.098031,    0.022452,
b 0.78288,     0.55059,     0.36917,
b 0.22776,     0.10595,     0.027254,
c 0.78302,     0.51968,     0.29398,
c 0.1419,      0.064051,    0.020662/
  END
```

```
C   This is file N2N.FOR
c
c  Purpose is to compute the energies and directions of scatter
c   of the two neutrons and the energy of the 11-C ion from the
c   reaction  n + 12-C --> n' + n' + 11-C.
c  New features added 4/87: (1) fix excitation of residual 11-C to
c   be less than (a third) neutron separation energy; (2) allow
c   residual 11-C to decay by proton emission, if there is a
c   sufficient amount of excitation energy; and (3) in any case,
c   check for possible gamma-ray decay of particle-bound excited
c   states in either 11-C or 10-B, the latter if proton emission
c   is allowed.
c
      Subroutine N2N
      Common /RANDM/  IRXrx
      Common /COLLIS/ Nelm,Echrg(6)
      Common /NEUTR2/ Eneut2, U2,V2,W2, X2,Y2,Z2
      Common /NAID/   Rad,Ht,Rc,Rz
      Common /VECTOR/ Xpn,Ypn,Zpn, Xn,Yn,Zn
      Common /NEUTRN/ SPDSQ, U, V, W, Xneut, Yneut, Zneut
      Common /MASSES/ Emass(19)
      Common /EXC10B/ Exc10(9)
c     Exc10 array in Subroutine NT
      Common /PROTON/ Noprot,Range(80),Proten(80)
      Common /PPOLAR/ X(37),Pt(37),N37
      Dimension Ptheta(37), Exc11C(11)
c  Next array is used to determine the polar scattering angle for
c   the first neutron.  It was taken from the formalism of the O5S
c   code, and represents a mildly forward-peaked scattering.  The
c   X-array which is its companion is given in Subroutine NP.
      Data Ptheta/0.0, 0.0332, 0.06605, 0.0986, 0.1309, 0.1628,
     A 0.1944, 0.2258, 0.2568, 0.2875, 0.3179, 0.348, 0.3778, 0.4073,
     B 0.4364, 0.4653, 0.4938, 0.5221, 0.550, 0.5776, 0.6049, 0.6319,
     C 0.6586, 0.685, 0.7111, 0.7369, 0.7624, 0.7875, 0.8124, 0.8369,
     D 0.8611, 0.885, 0.9086, 0.9319, 0.9549, 0.9776, 1.0/
c  Next array gives energies of particle-stable excited states in 11-C
      Data Exc11C/0.0, 2.0, 4.32, 4.8, 6.34, 6.48, 6.9, 7.5, 8.1, 8.42,
     a   8.66/
      Data Q/18.72/, Nterp/1/, TenCpn/13.124/, TenBpp/8.691/
      Data Kn/1/, Kp/2/, K12C/7/, K11C/9/, K10B/12/
c
C   The reaction scheme for purposes of computation is:
c      n + 12-C --> n + 12-C;       then:
c      12-C --> n + 11-C;
c       We take E(neutron) from CHOOSN.
c  Addition 4/87.  Consider possibility of 11-C --> p + 10-B
c
c       Start computation: go to Center-of-mass coordinates
      En=SPDSQ
```

```
      Vn = VELOCITY(Kn,En)
      CALL CMTRAN(Kn,K12C,Vn, Vcom,Eneut,Ecc)
      Tec=Ecc+Eneut
      Ta=Tec-Q
      Do 80 I=1,6
   80 Echrg(I)=0.0
      Epl=0.0
      IF (Ta .GT. 0.0) goto 2
      Type 100, En
  100 Format(/'   ***  Error in Subroutine N2N; E(neut) at entry ='
     b 1PE11.3/10x,'Set E(neut1) = E(neut2) = 0 and exit.'/)
      SPDSQ=0.0
      Eneut2=0.0
      Return
C         CHOOSE C.M. NEUTRON ENERGY
    2 Encom=RCKE(Kn,K12C,Ta)
c    Encom is the maximum energy the neutron can have in the center of mass
c      for the (n,2n) reaction.
      Eloww=0.0
      F=0.065+0.001*En
      Temp=F*En
c     Temp value chosen so that the "continuum" neutron spectrum calcu-
c       lated in CHOOSN is reasonably representative of that computed by
c       the nuclear model code TNG.
      Enc1 = CHOOSN(Eloww,Encom,Temp)
c   The difference in energy between Encom and Enc1 could be
c    interpreted as the added energy (larger than Q) of a "virtual"
c    energy level in the 12-C nucleus decaying by neutron emission.
      Try=Enc1*(Emass(Kn)+Emass(K12C))/Emass(K12C)
c       (That's approximately the "total available energy" that
c        would yield Enc1 from the function RCKE.)
      Entry=RCKE(Kn,K12C,Try)
      Try=Try*Enc1/Entry
c       (Iterate once on TRY for slightly more accuracy.)
      Excit=Ta-Try
c    (EXCIT  should be close to the added "virtual" excitation energy.)
      Qex=Q + Excit
C   FIND THE COSINE OF THE POLAR DIRECTION OF THE First Neutron (C.M.)
   15 RAND=RAN(IRX)
   18 CTHETA = EXTERP(Ptheta,X,Rand,N37,Nterp)
C     FIND THE SINE AND COSINE OF THE AZIMUTHAL DIRECTION OF THE
C      Neutron (C.M.) -- By Random-number Choice.
      RANN = 6.2831853*RAN(Irx)
      SINPHI = SIN(RANN)
      COSPHI = COS(RANN)
C    FIND THE C. M. VELOCITY COMPONENTS OF THE Neutron.
      Sintheta=SQRT(1.-Ctheta*Ctheta)
      Xp=Sintheta*Cosphi
      Yp=Sintheta*Sinphi
      Zp=Ctheta
```

```
      Vnr=VELOCITY(Kn,Enc1)
      Vnx=Xp*Vnr
      Vny=Yp*Vnr
      Vnz=Zp*Vnr
      CALL LABTRAN(Vnx,Vny,Vnz, Vcom, Vx,Vy,Vz)
      Vneut=SQRT(Vx*Vx + Vy*Vy + Vz*Vz)
C    FIND THE LAB ENERGY OF THE Neutron.
      Enl=EFROMV(Kn,Vneut)
c   Store information
      SPDSQ=Enl
      CALL DIRCOS(Vx,Vy,Vz, Xpn,Ypn,Zpn)
      Zx=U
      Zy=V
      Zz=W
      CALL TRANSVEC(Zx,Zy,Zz)
      U=Xn
      V=Yn
      W=Zn
c  That takes care of neutron number one.
C    FIND THE COMPONENTS OF THE 12-C VELOCITY IN THE LAB.
c      First adjust total available energy for the energy of the
c         "virtual" excited state.
   70 Taex=Tec-Qex
      E12C=RCKE(K12C,Kn,Taex)
      V12C=VELOCITY(K12C,E12C)
      Vbcx=-Xp*V12C
      Vbcy=-Yp*V12C
      Vbcz=-Zp*V12C
c     (Recall that the direction cosines of the 12-C ion in the center
c      of mass are negatives of the direction cosines of the neutron.)
      CALL LABTRAN(Vbcx,Vbcy,Vbcz, Vcom, Vbx,Vby,Vbz)
      V12C=SQRT(Vbx*Vbx + Vby*Vby + Vbz*Vbz)
c  Now worry about the second neutron energy.  The maximum center-of-mass
c  kinetic energy available is given by the variable EXCIT where now the
c  center of mass is the 12-C ion, and its motion is the center-of-mass
c  motion.  Need to get motion of 12-C ion in detector coordinates.
      CALL DIRCOS(Vbx,Vby,Vbz, Xpn,Ypn,Zpn)
      CALL TRANSVEC(Zx,Zy,Zz)
c  Now variables Xn,Yn,Zn = direction cosines of the motion of the
c     12-C in "detector" laboratory coordinate system.
      Ta=Excit
      Encom=RCKE(Kn,K11C,Ta)
      Ehat=En-Q
      F=0.065+0.001*Ehat
      Temp=F*Ehat
c   Now the added assumption -- following the neutron decay of the highly
c  excited 12-C nucleus, the residual 11-C ion is stable against further
c  neutron emission.  However, the possibility of proton decay of the
c  11-C to (as it turns out) a particle-bound state in 10-B will
c  be included.
```

```
      Tryy = Encom-TenCpn
      IF (Tryy .GT. 0.0) Eloww=Tryy
      Enn=CHOOSN(Eloww,Encom,Temp)
c      AND, once again, when choosing from a distribution the difference
c  in energy between Encom and Enn could be interpreted as a "Virtual"
c  energy level in 11-C.
      Try=Enn*(Emass(Kn)+Emass(K11C))/Emass(K11C)
      Entry=RCKE(Kn,K11C,Try)
      Try=Try*Enn/Entry
      Excitn=Ta-Try
c  If variable -Excitn- is small enough, pair it with a known particle-
c    stable state in 11-C
      Egamma=0.0
      IF (Excitn .GT. TenBpp) goto 9
      K=1
      Do 7 I=2,11
      IF (Excitn .LT. Exc11C(I)) goto 8
    7 K=K+1
    8 Excitn=Exc11C(K)
      Egamma=Excitn
      Taex=Ta-Excitn
      Enn=RCKE(Kn,K11C,Taex)
    9 Continue
c
c       SECOND NEUTRON EMISSION
c  For second neutron emission, the center-of-mass scattering is
c     isotropic.
      CALL RVECT(Xp,Yp,Zp)
      Vnn=VELOCITY(Kn,Enn)
      Vncx=Xp*Vnn
      Vncy=Yp*Vnn
      Vncz=Zp*Vnn
      CALL LABTRAN(Vncx,Vncy,Vncz, V12C, Vnx,Vny,Vnz)
      Vneut=SQRT(Vnx*Vnx + Vny*Vny + Vnz*Vnz)
      Eneut=EFROMV(Kn,Vneut)
      Eneut2=Eneut
c     Now get "new" neutron direction cosines in the
c      "detector" laboratory coordinates.
      CALL DIRCOS(Vnx,Vny,Vnz, Xpn,Ypn,Zpn)
      Zx=Xn
      Zy=Yn
      Zz=Zn
      CALL TRANSVEC(Zx,Zy,Zz)
      U2=Xn
      V2=Yn
      W2=Zn
c  now get the 11-C energy.
      Taex=Ta-Excitn
      E11C=RCKE(K11C,Kn,Taex)
      V11C=VELOCITY(K11C,E11C)
```

```
      Vbx=-Xp*V11C
      Vby=-Yp*V11C
      Vbz=-Zp*V11C+V12C
c    For Vbz including "LABTRAN" nonrelativistically.
c     Now have components of 11-C velocity in 12-C ion laboratory
c     coordinate system.
      V11C=SQRT(Vbx*Vbx + Vby*Vby + Vbz*Vbz)
      E11C=EFROMV(K11C,V11C)
      IF (Excitn .LE. TenBpp) goto 30
c
c       PROTON EMISSION
c    If program gets to here, 11-C is energetic enough to decay by
c   proton emission (actually, also by alpha emission, but we don't
c   attempt that case) to particle-stable levels in 10-B.
c  First get 11-C motion into "detector" laboratory coordinate system.
c   This step is needed to determine possible proton leakage from the
c   detector later in the program.
      CALL DIRCOS(Vbx,Vby,Vbz, Xpn,Ypn,Zpn)
      CALL TRANSVEC(Zx,Zy,Zz)
c    Done!  Xn,Yn,Zn = direction cosines of 11-C in "detector"
c      laboratory coordinate system.
      Ta=Excitn-TenBpp
      Epcom=RCKE(Kp,K10B,Ta)
      F=0.1245+0.001*ABS(En-45.0)
      Temp=F*En
      Eprot=CHOOSP(Epcom,Temp)
c    and as done before, one iteration for slightly improved accuracy..
      Try=Eprot*(Emass(Kp) + Emass(K10B))/Emass(K10B)
      Eptry=RCKE(Kp,K10B,Try)
      Try=Try*Eprot/Eptry
      Excit=Ta-Try
c  Now pair with an excited state in 10-B (see Function NT).
      Eleftov=0.0
      Egamma=0.0
      K=1
c  By present construction only 5 levels in 10-B are energetically
c     available, and they are all particle stable.
      Do 22 I=2,5
      IF (Excit .LT. Exc10(I)) goto 23
   22 K=K+1
   23 Excit=Exc10(K)
c  See comment following statement no. 18 in Subroutine NT for
c    gamma decay of levels in 10-B.
      IF (K .GT. 1) Egamma=Exc10(2)
      Eleftov=Exc10(K)-Egamma
      Taex=Ta-Excit
      Eprot=RCKE(Kp,K10B,Taex)
c  Get proton velocity in 11-C center-of-mass coordinates.
   25 Vprot=VELOCITY(Kp,Eprot)
c  Done.  "Fission" of 11-C --> p + 10-B is isotropic, perforce.
```

```
      CALL RVECT(Xp, Yp, Zp)
      Vpx=Xp*Vprot
      Vpy=Yp*Vprot
      Vpz=Zp*Vprot
      CALL LABTRAN(Vpx,Vpy,Vpz, V11C, Vx,Vy,Vz)
      Vprotl=SQRT(Vx*Vx + Vy*Vy + Vz*Vz)
c  Vprotl=velocity of proton in 11-C laboratory coordinates.
      Epl=EFROMV(Kp,Vprotl)
c  Store energy information; check for proton escape from detector.
      Echrg(2)=Epl
      CALL DIRCOS(Vx,Vy,Vz, Xpn,Ypn,Zpn)
      Zx=Xn
      Zy=Yn
      Zz=Zn
      CALL TRANSVEC(Zx,Zy,Zz)
c  Now Xn,Yn,Zn = direction cosines of proton in detector coordinates.
      Protpl=PLNGTH(Xn,Yn,Zn, Xneut,Yneut,Zneut, Rad,Ht)
c  Get proton range to compare with length of path to detector surface.
      Rprot=EXTERP(Proten,Range,Epl,Noprot,Nterp)
      RangeQ=Rprot-Protpl
      IF (RangeQ .LE. 0.0) goto 34
c  If program gets to here proton escapes.
      Eprotf=EXTERP(Range,Proten,RangeQ,Noprot,Nterp)
      Echrg(3)=Eprotf
   34 E10B=Taex-Eprot
      V10B=VELOCITY(K10B,E10B)
      Vbcx=-Xp*V10B
      Vbcy=-Yp*V10B
      Vbcz=-Zp*V10B +V11C
c  again, non-relativistic transformation, this time to 11-C laboratory
c   coordinate system.
      V10Blab=SQRT(Vbcx*Vbcx + Vbcy*Vbcy + Vbcz*Vbcz)
      E10B=EFROMV(K10B,V10Blab)
      Echrg(1)=E10B
      Goto 31
   30 Echrg(1)=E11C
   31 Nelm=8
      CALL BANKR2
      IF (Egamma .GT. 0.0) CALL PHOTON(Egamma)
c  See comment regarding "P.S.D." following statement no 16 in
c    Subroutine NT.
      IF (Egamma .LE. 0.0) Return
      IF (Eleftov .GT. 0.0) CALL PHOTON(Eleftov)
      Return
      END
```

```
C   This is file N3HE.FOR
c
c  Purpose is to compute energetics for reaction
c    n + 12-C --> 3-He + 10-Be, with possible subsequent decay
c        10-Be --> n + 9-Be.          As of 6/87.
c  Added in 9-Be decay modes -- 8/87.
c
      Subroutine N3HE
c
      Common /COLLIS/ Nelm,Echrg(6)
      Common /NEUTRN/ Eneut, U,V,W, X,Y,Z
      Common /MASSES/ Emass(19)
      Common /VECTOR/ Xpn,Ypn,Zpn, Xn,Yn,Zn
      Common /RANDM/  Irx
      Common /NAID/   Rad, Ht, Rr1, Rr2
      Common /EXCTBE/ Ex10Be(4),Be9pn
c  Array Ex10Be is in subroutine NPX.
      Common /NEUTR2/ Eneut2, U2,V2,W2, X2,Y2,Z2
      Common /PPLI8/  Nx9,Ex9(14),Pp(14)
      Common /BENINE/ Exc9Be(6),Be8pn
c  See subroutine NN3ALF for values of variables in -PPLI8- common.
c
      Dimension Epoly(3),B1(3),B2(3),B3(3),B4(3),B5(3),B6(3),Fi(6)
      Data Kn/1/, K12C/7/, K3He/19/, K10Be/15/, K9Be/4/, K8Be/8/
      Data Q/19.47/, Nfi/6/, Be8pn/1.6652/, Be8gs/0.092/, Ka/3/
c  Next array represents 9-Be level structure well enough for present use.
      Data Exc9Be/0.0, 2.9, 4.7, 6.8, 11.5, 14.0/
c
c  Next arrays will be used to determine angular distributions of
c    outgoing 3-He ions using Legendre coefficients determined from
c    study of the data provided by Subramanian, et al, Physical
c    Review C28, 521 (1983).
      Data Ipoly/3/, Epoly/27.4, 39.7, 60.7/
      Data B1/0.4204, 0.4207, 0.3993/,  B2/0.209, 0.1761, 0.1569/
      Data B3/0.0925, 0.046,  0.09874/, B4/0.033, 0.0234, 0.04945/
      Data B5/0.001,  0.00243,0.01223/, B6/0.004, 0.01271,0.00558/
c
c   Start computation.  Initialize variables.
      Do 1 I=1,6
    1 Echrg(I)=0.0
      En2=0.0
c  Go to center-of-mass and check E(neutron)
      En=Eneut
      Eneut=0.0
      Vn=VELOCITY(Kn,En)
      CALL CMTRAN(Kn,K12C,Vn, Vcom,Enc,Ecc)
      Tec=Enc+Ecc
      Ta=Tec-Q
      IF (Ta .GT. 0.0) goto 2
      Type 100, En
```

```
  100 Format(/'   ***  Error in Subroutine N3HE, En = '1PE11.4/
     x  10x,'Set E(neutron) = 0.0 and Exit... ')
      Return
c  Last is an "error" return.
c
c  Set up Legendre coeff. computation.
    2 Fi(1)=EXTERP(Epoly,B1,En,Ipoly,1)
      Fi(2)=EXTERP(Epoly,B2,En,Ipoly,1)
      Fi(3)=EXTERP(Epoly,B3,En,Ipoly,1)
      Fi(4)=EXTERP(Epoly,B4,En,Ipoly,1)
      Fi(5)=EXTERP(Epoly,B5,En,Ipoly,1)
      Fi(6)=EXTERP(Epoly,B6,En,Ipoly,1)
c  Get center-of-mass energies:
      Ehcom=RCKE(K3He,K10Be,Ta)
      Ehe=Ehcom
      Excit=0.0
      Egamma=0.0
      Eleftov=0.0
      Level=1
      IF (Ehcom .LT. Ex10Be(2)) goto 8
      IF (RAN(Irx) .LT. 0.04) goto 8
c    Last is to slightly enhance ground-state population of 10-Be.
      Level=5
      Temp=3.0
c    Last is an assumption, and probably not very critical since the
c      3-He production is small.
      Ehe=CHOOSP(Ehcom,Temp)
      Try=Ehe*(Emass(K3He) + Emass(K10Be))/Emass(K10Be)
      Etry=RCKE(K3He,K10Be,Try)
      Try=Try*Ehe/Etry
c    As usual, one iteration on -Try- for improved precision.
      Excit=Ta-Try
      IF (Excit .GT. Be9pn) goto 6
c  If -Excit- is < 9-Be + n, then pair -Excit- with "level" in 10-Be.
      K=1
      Do 3 I=2,4
      IF (Excit .LT. Ex10Be(I)) goto 4
    3 K=K+1
    4 Excit=Ex10Be(K)
      Level=K
c  See subroutine NPX, comments following statement no. 42, for decay
c   characteristics of 10-Be levels.
      IF (K.GE.2) Egamma=Ex10Be(2)
      IF (K.EQ.3 .AND. RAN(Irx).GE.0.5) Egamma=Excit
      Eleftov=Excit-Egamma
    6 Taex=Ta-Excit
      Ehe=RCKE(K3He,K10Be,Taex)
    8 Qex=Q+Excit
c  Now get 3-He scattering angle by random choice from Legendre
c    coefficients tabulated above.
```

```
      Ctheta=CHOOSL(Fi,Nfi)
c  Done.  Now choose azimuthal angle and get direction cosines of 3-He.
      Rann=6.283185*RAN(Irx)
      Sinphi=SIN(Rann)
      Cosphi=COS(Rann)
      Sintheta=SQRT(1.0-Ctheta*Ctheta)
      Cx=Sintheta*Cosphi
      Cy=Sintheta*Sinphi
      Cz=Ctheta
c  Done.  Get velocity components of 3-He ion in center-of-mass coords.
      Vhe=VELOCITY(K3He,Ehe)
      Vhx=Cx*Vhe
      Vhy=Cy*Vhe
      Vhz=Cz*Vhe
c  Done.  Transform to velocity components in laboratory coords.
      CALL LABTRAN(Vhx,Vhy,Vhz, Vcom, Vx,Vy,Vz)
c  Done.  Get Velocity and Energy of 3-He ion in laboratory coords.
      V3He=SQRT(Vx*Vx + Vy*Vy + Vz*Vz)
      E3He=EFROMV(K3He,V3He)
      Echrg(1)=E3He
c  That's the energy of the 3-He ion.  Now study 10-Be ion motion.
      Taex=Tec-Qex
      EBe=RCKE(K10Be,K3He,Taex)
      VBe=VELOCITY(K10Be,EBe)
      Vbx=-Cx*VBe
      Vby=-Cy*VBe
      Vbz=-Cz*Vbe
      CALL LABTRAN(Vbx,Vby,Vbz, Vcom, Vx,Vy,Vz)
      V10Be=SQRT(Vx*Vx + Vy*Vy + Vz*Vz)
c  Check for 10-Be decay.  If not, save energy of 10-Be ion and exit.
      IF (Level .LE. 4) goto 20
c  Program counter to here, study 10-Be --> n + 9-Be.
c  First rotate 10-Be motion into "detector" lab. coordinates.
      CALL DIRCOS(Vbx,Vby,Vbz, Xpn,Ypn,Zpn)
      CALL TRANSVEC(U,V,W)
c  Done.  Dir. cosines of 3-He motion are Xn,Yn,Zn in "detector"
c    laboratory coordinate system.
      Ta=Excit-Be9pn
      Enmax=RCKE(Kn,K9Be,Ta)
      Enn=Enmax
      Ehat=En-Q
      Fn=0.065+0.001*Ehat
      Temp=Fn*Ehat
      Elow=0.0
      Entry=CHOOSN(Elow,Enmax,Temp)
      Try=Entry*(Emass(Kn) + Emass(K9Be))/Emass(K9Be)
      Etry=RCKE(Kn,K9Be,Try)
      Try=Try*Entry/Etry
      Excit=Ta-Try
c  At this point check for possible proton decay.
```

```
      Npgo=0
      IF (Excit .LE. Ex9(1)) goto 10
      Prob=EXTERP(Ex9,Pp,Excit,Nx9,1)
      IF (RAN(Irx) .GT. Prob) goto 10
      Npgo=1
c  Program to here, have  9-Be --> p + 8-Li
      Goto 14
c
c  Next check for 2d neutron already waiting to be processed.  If
c    so, then cannot have further neutron emission from 9-Be, so
c    go directly to ground state of 9-Be.
   10 IF (Eneut2 .GT. 0.0) goto 15
c  Program counter to here, then have  9-Be --> n + 8-Be
c       followed by             8-Be --> 2 alphas.
c  Restrict 8-Be to ground state for simplicity -- justification is
c    small cross sections just to get this far, so won't be very
c    many of these events.
      Npgo=-1
      IF (Excit .GE. 16.0) goto 14
      K=1
      Do 12 I=2,6
      IF (Excit .LT. Exc9Be(I)) goto 13
   12 K=K+1
   13 Excit=Exc9Be(K)
c  Check for  -EXCIT-  =0, i.e., ground state of 9-Be.
      IF (K .EQ. 1) Npgo=0
      Try=Ta-Excit
   14 Enn=RCKE(Kn,K9Be,Try)
   15 Vn=VELOCITY(Kn,Enn)
C     Isotropy of  n + 9-Be  in 10-Be center-of-mass coordinates.
      CALL RVECT(Xp,Yp,Zp)
      Vnx=Xp*Vn
      Vny=Yp*Vn
      Vnz=Zp*Vn
c  Transform velocity components to 10-Be lab. coords.
      CALL LABTRAN(Vnx,Vny,Vnz, V10Be, Vx,Vy,Vz)
c  Done.  Get velocity, energy of neutron in 10-Be lab. coords.
      Vnlab=SQRT(Vx*Vx + Vy*Vy + Vz*Vz)
      Enlab=EFROMV(Kn,Vnlab)
      Eneut=Enlab
c  Done.  Rotate neutron velocity into "detector" lab. coords.
      CALL DIRCOS(Vx,Vy,Vz, Xpn,Ypn,Zpn)
      Z1=Xn
      ZB=Yn
      Z3=Zn
      CALL TRANSVEC(Z1,ZB,Z3)
c    Done.  Put new dir. cosines into /NEUTRN/ Common variables.
      U=Xn
      V=Yn
      W=Zn
```

```
c  (Same position coordinates as for  n + 12-C assumed.)
c  Now get information on energy of 9-Be to save.
      IF (Npgo .EQ. 0) Try=Ta
      E9Bec=Try-Enn
      V9Bec=VELOCITY(K9Be,E9Bec)
      V9x=-Xp*V9Bec
      V9y=-Yp*V9Bec
      V9z=-Zp*V9Bec
c  Transform those c.o.m. components to 10-Be laboratory coordinates.
      CALL LABTRAN(V9x,V9y,V9z, V10Be, Vx,Vy,Vz)
c  Done.  Get energy of 9-Be.
      V9Be=SQRT(Vx*Vx + Vy*Vy + Vz*Vz)
c  Check for further neutron or proton decay of 9-Be
      IF (Npgo .EQ. 0) goto 19
c  Program to here, further particle decay.  First rotate 9-Be
c    velocity vector to "detector" coordinates.
      CALL DIRCOS(Vx,Vy,Vz, Xpn,Ypn,Zpn)
      CALL TRANSVEC(Z1,ZB,Z3)
c  Done.  Set up and test for proton decay of 9-Be.
      Egamma=0.0
      Eleftov=0.0
      IF (Npgo .EQ. 1) goto 16
c  Program to here, it's  9-Be --> n + 8-Be.
      Taex=Excit-Be8gs-Be8pn
      Enc=RCKE(Kn,K8Be,Taex)
      Vnc=VELOCITY(Kn,Enc)
      CALL RVECT(Xp,Yp,Zp)
      Vnx=Xp*Vnc
      Vny=Yp*Vnc
      Vnz=Zp*Vnc
      CALL LABTRAN(Vnx,Vny,Vnz, V9Be, Vx,Vy,Vz)
      Vnlab=SQRT(Vx*Vx + Vy*Vy + Vz*Vz)
      Eneut2=EFROMV(Kn,Vnlab)
c  Rotate neutron velocity into "detector" lab. coordinates.
      CALL DIRCOS(Vx,Vy,Vz, Xpn,Ypn,Zpn)
      Z1=Xn
      ZB=Yn
      Z3=Zn
      CALL TRANSVEC(Z1,ZB,Z3)
c  Done.  Put values into  /NEUTR2/  common variables.
      U2=Xn
      V2=Yn
      W2=Zn
      X2=X
      Y2=Y
      Z2=Z
C  Now get 8-Be ion motion.
      E8Bec=Taex-Enc
      V8Bec=VELOCITY(K8Be,E8Bec)
      V8x=-Xp*V8Bec
```

```
      V8y=-Yp*V8Bec
      V8z=-Zp*V8Bec
      CALL LABTRAN(V8x,V8y,V8z, V9Be, Vx,Vy,Vz)
      V8Be=SQRT(Vx*Vx + Vy*Vy + Vz*Vz)
c  Done.  Now  8-Be --> 2 alphas.
      Ta=Be8gs
      Ea=0.5*Ta
      Vac=VELOCITY(Ka,Ea)
      CALL RVECT(Xp,Yp,Zp)
      Vax=Xp*Vac
      Vay=Yp*Vac
      Vaz=Zp*Vac
      CALL LABTRAN(Vax,Vay,Vaz, V8Be, Vx,Vy,Vz)
      Valph=SQRT(Vx*Vx + Vy*Vy + Vz*Vz)
      Echrg(2)=EFROMV(Ka,Valph)
c  That's one alpha.  Now get the other.
      Vax2=-Vax
c     (By symmetry.)
      Vay2=-Vay
      Vaz2=-Vaz
      CALL LABTRAN(Vax2,Vay2,Vaz2, V8Be, Vx,Vy,Vz)
      Valph2=SQRT(Vx*Vx + Vy*Vy +Vz*Vz)
      Echrg(3)=EFROMV(Ka,Valph2)
c      Done!!
      Goto 25
c
c  Next is proton decay, i.e.,  9-Be --> p + 8-Li
c    A complexity at this point.  If there is a second neutron
c     waiting to be processed, then Subroutine PP8LI must be
c     alerted to inhibit further neutron decay of 8-Li.  In
c     addition, Subroutine ELI8DK (which is called by PP8LI)
c     puts the information on the neutron from  8-Li --> n + 7-Li
c     into the /NEUTRN/ common; however, this common area already
c     has information for the neutron from  10-Be --> n + 9-Be
c     reaction just completed.  So need to do some preparation.
   16 V9=V9Be
      IF (Eneut2 .GT. 0.0) goto 17
c  If program counter to here, no second neutron waiting to be
c    processed, so shift first neutron information into /NEUTR2/ common.
      Eneut2 = Eneut
      U2 = U
      V2 = V
      W2 = W
      X2 = X
      Y2 = Y
      Z2 = Z
      Eneut = 0.0
      I2=0
      Goto 18
c
```

```
c    But if there is a second neutron, alert -PP8LI- through variable V9Be.
   17 V9=-V9Be
      I2=1
   18 CALL PP8LI(Excit,V9,Egamma)
c  If both neutrons determined by present routine, set Eneut2 to
c   negative to alert -BANKR2- ; will return to >0 before exit from
c   routine.
      IF (I2 .EQ. 0) Eneut2=-Eneut2
      Goto 25
c
   19 Echrg(3)=EFROMV(K9Be,V9Be)
c  That's it for 9-Be ground-state results!
      Goto 25
c     END  n + 9-Be SECTION.
c
c  Tidy up 10-Be ion.
   20 Echrg(3)=EFROMV(K10Be,V10Be)
   25 Nelm=12
      CALL BANKR2
      IF (Eneut2 .LT. 0.0) Eneut2=-Eneut2
c  Check for gamma ray interaction.
      IF (Egamma .GT. 0.0) CALL PHOTON(Egamma)
c  (See P.S.D. comment following statement 26 in subroutine NT.)
      IF (Egamma .LE. 0.0) Return
      IF (Eleftov.GT. 0.0) CALL PHOTON(Eleftov)
      Return
c
c     At exit from this routine particle energies are stored:
c-----------------------------------------------------------------------
c   Decay Mode                 Echrg array                    Eneut   Eneut2
c                (1)    (2)     (3)     (4)     (5)     (6)
c-----------------------------------------------------------------------
c   3-He+10-Be   3-He   0.0    10-Be    0.0     0.0     0.0     0.0     --
c  3-He+n+9-Be   3-He   0.0     9-Be    0.0     0.0     0.0      En     --
c   3-He+2n+2a   3-He  alpha   alpha    0.0     0.0     0.0     En1    En2
c 3-He+n+p+8-Li  3-He  p(esc)   8-Li  proton    0.0     0.0      En     --
c 3-He+2n+p+7-Li 3-He  p(esc)   7-Li  proton    0.0     0.0     En1    En2
c 3-He+2n+p+t+a  3-He  p(esc)   0.0   proton   alpha   triton   En1    En2
c-----------------------------------------------------------------------
c  N.B.--cannot get to 6-Li in this routine as that would entail a
c  third neutron
c
      END
```

```
c   This is file NALPHA.FOR
C
      SUBROUTINE NALPHA
c
C  NALPHA DOES THE CALCULATIONS FOR THE REACTION N + 12C -> ALPHA + 9BE.
C   12-C(N,ALPHA)9-BE COLLISION
C
      Common /RANDM/ IRX
      Common /NEUTRN/ Eneut,U,V,W,X,Y,Z
      Common /COLLIS/ Nelm,Echrg(6)
c
      Dimension A1(10),B1(10),B2(10),B3(10),B4(10),B5(10),B6(10),Fi(6)
c
      Data Q/5.71/, Kn/1/, K12C/7/, K9Be/4/, Ka/3/
      Data Ipoly/10/, Nfi/6/, Nterp/1/
C
c  Next are normalized Legendre polynomial coefficients, B1 thru B6,
c   for En = A1.  Data for En .LE. 9.83 from G. Dietze et al. in Nuclear
c   Data for Science and Technology, 6-10 Sept 1982, Antwerp.
c   Data for En = 13.9 and 15.6 deduced from angular distributions
c   measured by Brendle et al., Z. Naturforsch. 23a (1968) 1229.
c   Data for En = 14.1 MeV deduced from angular distribution measured
c   by Haight et al, Nuclear Science & Eng. 87 (1984) 41.
c   Data for En = 11.5 MeV included to bridge the gap and has no
c   experimental basis.
      Data A1/8.0, 8.64, 8.99, 9.22, 9.41, 9.83, 11.5, 13.9,14.1,15.6/
      Data B1/0.2447, 0.226, -0.1538, -0.1006, -0.1708, -0.04401,
     X 0.06217, 0.1525, 0.24192, 0.06217/
      Data B2/0.07407, -0.1602, 0.06007, 0.1265, 0.1833, 0.1678,
     X -0.058, 0.01694, 0.10631, -0.058/
      Data B3/0.04101, -0.0905, 0.00231, 0.0048, 0.02966, 0.01752,
     X -0.0324, -0.00457, 0.05494, -0.03239/
      Data B4/0.0236, 0.02001, 0.08777, 0.138, 0.1263, 0.04874,
     X 0.0497, 0.04144, 0.09454, 0.04966/
      Data B5/ 0.0, 0.02022, 0.0, 0.00375, -0.01591, -0.105,
     X 0.0259, 0.05025, 0.07588, 0.02585/
      Data B6/0.0, 0.0, 0.0, 0.01643, 0.03383, -0.0293, -0.02105,
     X -0.0102, 0.015443, -0.02105/
c
      En=Eneut
      Eneut=0.0
      Vn=VELOCITY(Kn,En)
      CALL CMTRAN(Kn,K12C,Vn, Vcom,Enc,Ecc)
      Tec=Enc+Ecc
      Ta=Tec-Q
      IF (Ta .GT. 0.0) goto 10
      Type 5, En
    5 Format(/'   *** Error in Subroutine NALPHA; E(neut) at entry ='
     Y 1PE11.3/10x,'Set E(Alpha) = 0 and exit'/)
      Echrg(1)=0.0
```

```
      Echrg(2)=0.0
      Return
c
   10 Ealpha=RCKE(Ka,K9Be,Ta)
      Vac=VELOCITY(Ka,Ealpha)
c  Now get cosine of polar scattering angle.
      Fi(1)=EXTERP(A1,B1,En,Ipoly,Nterp)
      Fi(2)=EXTERP(A1,B2,En,Ipoly,Nterp)
      Fi(3)=EXTERP(A1,B3,En,Ipoly,Nterp)
      Fi(4)=EXTERP(A1,B4,En,Ipoly,Nterp)
      Fi(5)=EXTERP(A1,B5,En,Ipoly,Nterp)
      Fi(6)=EXTERP(A1,B6,En,Ipoly,Nterp)
      Fmu=CHOOSL(Fi,Nfi)
      Sinpsi=SQRT(1.0 - Fmu*Fmu)
      Phi=6.283185*RAN(Irx)
      Xa=Sinpsi*COS(Phi)
      Ya=Sinpsi*SIN(Phi)
      Za=Fmu
      Vax=Xa*Vac
      Vay=Ya*Vac
      Vaz=Za*Vac
      CALL LABTRAN(Vax,Vay,Vaz, Vcom, Vx,Vy,Vz)
      Va=SQRT(Vx*Vx + Vy*Vy + Vz*Vz)
      Ealfa=EFROMV(Ka,Va)
      Echrg(1)=Ealfa
      E9Bec=Ta-Ealpha
      V9Bec=VELOCITY(K9Be,E9Bec)
      V9x=-Xa*V9Bec
      V9y=-Ya*V9Bec
      V9z=-Za*V9Bec
      CALL LABTRAN(V9x,V9y,V9z, Vcom, Vx,Vy,Vz)
      V9Be=SQRT(Vx*Vx + Vy*Vy + Vz*Vz)
      E9Be=EFROMV(K9Be,V9Be)
      Echrg(2)=E9Be
      Nelm=4
      CALL BANKR2
      Return
      END
```

```
C   This is file ND.FOR
c
c  Purpose to compute energies of the deuteron and 11-B coming from
c   the collision  n + 12-C --> d + 11-B.
c    One assumption is that the deuteron "continuum" has the
c    same relative energy distribution as computed for protons by
c    the nuclear model code TNG.  In addition, the programming
c    specifies some amount of ground-state (n,d) collisions for
c    all En, more or less consistent with measured spectra.
c
c  Added in 5/87: Consider possibility of 11-B --> n + 10-B
c    following the (n,d) reaction to a highly-excited "state" in 10-B.
c
      Subroutine ND
c
      Real*4 Li7pa
      Common /COLLIS/ Nelm,Echrg(5)
      Common /NEUTRN/ Eneut, U,V,W,X,Y,Z
      Common /MASSES/ Emass(19)
      Common /VECTOR/ Xpn,Ypn,Zpn, Xn,Yn,Zn
      Common /PPOLAR/ Xmu(37), Pth(37), Npolar
      Common /NAID/   Rad, Ht, Rc, Rz
      Common /RANDM/  Irx
      Common /PROTON/ Noprot,Range(80),Proten(80)
      Common /EXC11B/ Exc11(14),TenBpn,Li7pa
c     Exc11 array tabulated in subroutine NPX
      Common /EXC10B/ Ex10B(9)
c     Ex10B array tabulated in Subroutine NT
c
      Dimension Ptheta(37)
c  The next array is used to determine the polar scattering
c   angle of the deuteron and is taken from the measurements
c   in Nuclear Instruments & Methods 129 (1975) 241 for
c   En(lab)=56 MeV.
      Data Ptheta/0.0, 0.013, 0.0596, 0.1318, 0.2128, 0.2959, 0.3768,
     Q  0.4527, 0.522, 0.584, 0.6387, 0.6861, 0.7267, 0.7611, 0.7901,
     P  0.8141, 0.8341, 0.8504, 0.8636, 0.8755, 0.8873, 0.8989,
     N  0.9103, 0.9212, 0.9318, 0.9418, 0.9513, 0.960, 0.9681,
     M  0.9753, 0.9817, 0.9872, 0.9918, 0.9954, 0.9979,0.9995, 1.0/
      Data Q/13.732/, Kn/1/, K12C/7/, Kd/10/, K11B/5/, Nterp/1/
      Data K10B/12/
c
c  Start computation.  Zero charged-particle array.
      Do 1 I=1,6
    1 Echrg(I)=0.0
c  Go to center-of-mass coordinates.  Check to be sure incident
c   neutron energy is large enough.
      En=Eneut
      Eneut=0.0
      Vn=VELOCITY(Kn,En)
```

```
      CALL CMTRAN(Kn,K12C,Vn, Vcom,Enc,Ecc)
      Tec=Enc+Ecc
      Ta=Tec-Q
      IF (Ta .GT. 0.0) goto 2
      Type 100, En
  100 Format(/'   ***  Error in Subroutine ND; E(neut) at entry = '
     a  1PE11.3/10x,'Set E(neut) = E(deuteron) = 0 and exit.'/)
      Return
c
c  Get center-of-mass energies, then transform to lab coord. energies
    2 Edcom=RCKE(Kd,K11B,Ta)
      Edeut=Edcom
      Excit=0.0
      Egamma=0.0
      Eleftov=0.0
      IF (Edcom .LT. 2.22) goto 9
      GSenhanc=0.00543*En
      IF (En .GT. 30.0) GSenhanc=0.08*SQRT(En-25.85)
      IF (RAN(Irx) .LT. GSenhanc) goto 9
c  Last is to enhance ground-state transition, and is ad hoc.
      Temp=0.13*En
      IF (En.LT.30.0) Temp=12.6-1.07*En+0.026*En*En
c  Ad hoc formula for "nuclear temperature" to be used in CHOOSP
      Edeut=CHOOSP(Edcom,Temp)
c      Assume same "continuum" distribution of deuterons as we
c       have for protons.  It's an assumption.
      Try=Edeut*(Emass(Kd) + Emass(K11B))/Emass(K11B)
      Edtry=RCKE(Kd,K11B,Try)
c  Same "continuum" level excitation energy determination procedure
c    as used for protons in subroutine NPX.
      Try=Try*Edeut/Edtry
      Excit=Ta-Try
c   If variable Excit is relatively small, pair it with a known
c   excited state in 11-B.
      IF (Excit .LT. TenBpn)  goto 4
      IF (Excit .GT. TenBpn+0.5) goto 9
      Excit=TenBpn+0.25
      K=15
      Goto 8
    4 K=1
      Do 17 I=2,14
      IF (Excit .LT. Exc11(I)) goto 18
   17 K=K+1
   18 Excit=Exc11(K)
c  For gamma-ray energy assignments see comment following statement
c    No. 76 in Subroutine NPN
      Egamma=Exc11(K)
      IF (K.EQ.8 .OR. K.EQ.9) Egamma=Exc11(2)
      IF (K.EQ. 11) Egamma=Exc11(3)
      Eleftov=Exc11(K)-Egamma
```

```
c
    8 Taex=Ta-Excit
      Edeut=RCKE(Kd,K11B,Taex)
c
    9 Qex=Q + Excit
c
c   Next get polar scattering angle for the deuteron from array
c    Ptheta, above, and array Xmu (=array X in subroutine NP).
      Rand=RAN(Irx)
      Ctheta=EXTERP(Ptheta,Xmu,Rand,Npolar,Nterp)
      IF (Tec .GE. 51.7) goto 20
      Ciso=1.0-2.0*Rand
      Slope=(Ctheta-Ciso)/(51.7-Qex)
c  For En(c.o.m.) < 51.7 MeV interpolate between Ptheta results
c    and isotropy to get Ctheta.
      Ctheta=Slope*(Tec-Qex)
      Ctheta= EXTERP(Ptheta,Xmu,Rand,Npolar,Nterp)
c
c  Now get azimuthal scattering and direction cosines
   20 Rann = 6.283185*RAN(Irx)
      Sinphi=SIN(Rann)
      Cosphi=COS(Rann)
      Sintheta=SQRT(1.0 - Ctheta*Ctheta)
      Cx=Sintheta*Cosphi
      Cy=Sintheta*Sinphi
      Cz=Ctheta
      Vdeut=VELOCITY(Kd,Edeut)
      Vdx=Cx*Vdeut
      Vdy=Cy*Vdeut
      Vdz=Cz*Vdeut
      CALL LABTRAN(Vdx,Vdy,Vdz, Vcom, Vx,Vy,Vz)
      Vd=SQRT(Vx*Vx + Vy*Vy + Vz*Vz)
      Edt=EFROMV(Kd,Vd)
      Echrg(1)=Edt
c       That's the energy for the deuteron.
c     Now check for deuteron escape in same manner as done for
c        protons.
      Echrg(2)=0.0
      CALL DIRCOS(Vx,Vy,Vz, Xpn,Ypn,Zpn)
      CALL TRANSVEC(U,V,W)
c  Xn,Yn,Zn are deuteron's direction cosines in detector coords.
      IF (Edt .LE. 0.2) goto 10
      Deutpl=PLNGTH(Xn,Yn,Zn, X,Y,Z, Rad,Ht)
      Epofd=0.5*Edt
      Rdeut=2.0*EXTERP(Proten,Range,Epofd,Noprot,Nterp)
c   That gets the range of the deuteron using the proton range data.
      RangeQ=Rdeut-Deutpl
      IF (RangeQ .LE. 0.0) goto 10
c   If it gets to next step, deuteron escaped.
      RangeQ=0.5*RangeQ
```

```
      Eout=2.0*EXTERP(Range,Proten,RangeQ,Noprot,Nterp)
      Echrg(2)=Eout
c  Okay -- settled deuteron escape.
c  Next: get energy of recoil 11-B ion.
   10 Taex=Tec-Qex
      E11B=RCKE(K11B,Kd,Taex)
      V11B=VELOCITY(K11B,E11B)
      Vbx=-Cx*V11B
      Vby=-Cy*V11B
      Vbz=-Cz*V11B
      CALL LABTRAN(Vbx,Vby,Vbz, Vcom, Vx,Vy,Vz)
      V11B=SQRT(Vx*Vx + Vy*Vy + Vz*Vz)
c  Okey to here for straight (n,d). Now test for subsequent neutron decay,
c  i.e., (n,dn) reaction leading to bound states of 7-Li
      IF (Excit .LE. Li7pa) goto 40
      IF (K .EQ. 10) goto 40
      Tryn=RAN(Irx)
      IF (K.EQ.11 .AND. Tryn.LT.0.9) goto 40
      IF (K.EQ.13 .AND. Tryn.LT.0.0001) goto 40
c  Program counter to here, have alpha or neutron emission.
c  First get 11-B ion into "detector" coordinates.
      CALL DIRCOS(Vx,Vy,Vz, Xpn,Ypn,Zpn)
      CALL TRANSVEC(U,V,W)
c  Done.  Xn,Yn,Zn = dir. cosines of moving 11-B ion in "detector"
c    laboratory coordinates.
      IF (K.EQ.15 .AND. Tryn.LT.0.56) goto 14
      IF (Excit .GT. TenBpn) goto 15
c  Program to here, have 11-B --> 7-Li + alpha decay
   14 Egamma=0.0
      Eleftov=0.0
      Ta=Excit-Li7pa
      CALL AP7LI(Ta,V11B,Egamma)
      Goto 45
C  END ALPHA DECAY SECTION
c
c      Program to here have 11-B --> n + 10-B decay to consider.
   15 Ta=Excit-TenBpn
      Encom=RCKE(Kn,K10B,Ta)
      Ehat=En-Q
      Fn=0.065 + 0.001*Ehat
      Temp=Fn*Ehat
c  Assumption of last three statements is that the "continuum"
c    neutron distribution from decay of the excited 11-B ion is the
c    same as used for decay of an excited 12-C ion after adjusting
c    the "incident" neutron energy.
      Eloww=0.0
      Enn=CHOOSN(Eloww,Encom,Temp)
      Try=Enn*(Emass(Kn) + Emass(K10B))/Emass(K10B)
c        Iterate once for improved accuracy on -Try-.
      Entry=RCKE(Kn,K10B,Try)
```

```
      Excitn=Ta-Try
      Egamma=0.0
      Eleftov=0.0
      Level=10
      IF (Excitn .GE. 6.11) goto 26
      K=1
      Do 24 I=2,9
      IF (Excitn .LT. Ex10B(I)) goto 25
   24 K=K+1
   25 Excitn=Ex10B(K)
      Level=K
c  For gamma decay of excited states of 10-B see comments following
c    Statement No. 18 in Subroutine NT
      IF (K.GT.1) Egamma=Ex10B(2)
      Eleftov=Ex10B(K)-Egamma
c
c  Now get information on neutron into "detector" laboratory coords.
   26 Taex=Ta-Excitn
      Enn=RCKE(Kn,K10B,Taex)
      CALL RVECT(Xnn,Ynn,Znn)
      Vnn=VELOCITY(Kn,Enn)
      Vxc=Xnn*Vnn
      Vyc=Ynn*Vnn
      Vzc=Znn*Vnn
      CALL LABTRAN(Vxc,Vyc,Vzc, V11B, Vx,Vy,Vz)
      Vneutl=Sqrt(Vx*Vx + Vy*Vy + Vz*Vz)
      Eneut=EFROMV(Kn,Vneutl)
c  That gets outgoing neutron energy.  Now get dir. cosines.
      CALL DIRCOS(Vx,Vy,Vz, Xpn,Ypn,Zpn)
      Zx=Xn
      Zy=Yn
      Zz=Zn
      CALL TRANSVEC(Zx,Zy,Zz)
c  Done.  Save in /NEUTRN/ Common variable locations.
      U=Xn
      V=Yn
      W=Zn
c  Now get information on 10-B ion.
      E10B=Taex-Enn
      V10B=VELOCITY(K10B,E10B)
      Vbx=-Xnn*V10B
      Vby=-Ynn*V10B
      Vbz=-Znn*V10B + V11B
c  Non-relativistic c.o.m. --> lab. coord. transformation for
c     heavy ion motion.
      V10Blab=SQRT(Vbx*Vbx + Vby*Vby + Vbz*Vbz)
c  Now test for possible (highly-excited) 10-B ion particle decay.
      IF (Level .LE. 6) goto 37
      IF (Level.EQ.8 .AND. RAN(Irx).LT.0.5) goto 37
      Eleftov=0.0
```

```
c  Get 10-B ion dir. cosines in "detector" lab. coordinates
      CALL DIRCOS(Vbx,Vby,Vbz, Xpn,Ypn,Zpn)
      CALL TRANSVEC(Zx,Zy,Zz)
c  Done.  Now do 10-B decay.
      CALL TENBDK(Excitn,V10Blab,Egamma)
      Goto 45
c
   37 Echrg(3)=EFROMV(K10B,V10Blab)
      Goto 45
c  END SECTION for neutron emission.
c
c  Next statement is the tag end of the (n,d) computation.
   40 EB=EFROMV(K11B,V11B)
      Echrg(3)=EB
c       and that's it for the the 11-B ion
   45 Nelm=9
      CALL BANKR2
c  Now check for possible gamma-ray contributions:
      IF (Egamma .GT. 0.0) CALL PHOTON(Egamma)
c  See Comment end of Subroutine NT for next two statements.
      IF (Egamma .LE. 0.0) Return
      IF (Eleftov .GT. 0.0) CALL PHOTON(Eleftov)
      Return
      END
```

```
C   This is file NN3ALF.FOR
c
c     Purpose is to compute the reaction  n + 12-C --> n' + 3 alphas
c  At exit should have the n' energy and its direction cosines in
c  the appropriate variables in the NEUTRN Common area, and the
c  energies of the 3 alphas in the array Echrg in the
c  COLLIS Common area.
c
c  The calculation follows one of several reaction schemes:
c
c    1. (a)        n + 12-C  -->  n' + 12-C (excited)
c       (b)  12-C (excited)  -->  alpha + 8-Be (ground state)
c       (c)  8-Be (grnd st)  -->  2 alphas.
c
c    2. (a)  same as 1. (a)
c       (b)  12-C (excited)  -->  alpha + 8-Be (excited state at 3.0 MeV)
c       (c)  8-Be (excited)  -->  2 alphas.
c
c    3. (a)  same as 1. (a)
c       (b)  12-C (excited)  -->  3 alphas via 3-body breakup
c
c    4. (a)        n + 12-C  -->  alpha + 9-Be (excited)
c       (b)  9-Be (excited)  -->  n + 8-Be (ground state)
c       (c)  same as 1. (c)
c
c    5. (a)  same as 4. (a)
c       (b)  9-Be (excited)  -->  n + 8-Be (excited state at 3.0 MeV)
c       (c)  same as 2. (c)
c
c    6. (a)  same as 4. (a)
c       (b)  9-Be (excited)  -->  alpha + 5-He
c       (c)  5-He            -->  n + alpha
c
c    Added 5/87:
c    7. (a)  same as 4. (a)
c       (b)  9-Be (excited!) --> p + 8-Li
c       (c)  8-Li --> several modes.
c
      Subroutine NN3ALF
c
      Real*4 Li8pp, Li7pn
      Common /RANDM/ Irx
      Common /P3ALF/ Pbar(13)
      Common /NEUTRN/ Eneut, Vnprx, Vnpry, Vnprz, X, Y, Z
      Common /NEUTR2/ Eneut2, U2,V2,W2, X2,Y2,Z2
      Common /COLLIS/ Nelm, Echrg(6)
      Common /VECTOR/ Xb,Yb,Zb, Xn,Yn,Zn
      Common /MASSES/ Emass(19)
      Common /PPLI8/  Nx9,Ex9(14),Pprot(14)
      Dimension Q(14)
```

```
c
      Data Rmass/0.922461/, Rmass2/0.666670/
      Data K5He/11/, K9Be/4/, Kn/1/, KC/7/, K8Be/8/, Ka/3/
      Data TenMeV/10.0/, Q5He/0.88/, Qcont/17.9/
      Data Q/7.656,9.641,8.13,8.54,10.84,10.4,11.84,12.46,14.08,
     X   16.1,0.0,16.99,19.7,0.0/
      Data Qnn/7.3665/, E8Bex/3.0/, QBa/2.46/, QBn/1.666/
      Data E8Begs/0.092/, Qaa/22.5/, Qna/5.71/
C
c  Next arrays for determining proton branching following
c    n + 12-C --> alpha + 9-Be.
      Data Ex9/ 16.89, 17.11, 17.33, 18.1, 18.7, 18.94, 19.7,
     a  19.94, 21.1, 26.0, 32.0, 38.6, 44.0, 51.3/
      Data Pprot/ 0.0, .000036, .0134, .0484, .1226, .0965, .156,
     a  .1237, .2,   .22,  .175, .18,   .2,  .25/
      Data Nx9/14/, Nterp/1/, K8Li/16/, Li8pp/16.888/, Li7pn/2.033/
      Data Kp/2/
c
c  Initial set up.
      Do 1 I=1,6
    1 Echrg(I)=0.0
      Egamma=0.0
c
c  First step: transform to center-of-mass coordinates
      En=Eneut
      Vn=VELOCITY(Kn,En)
      CALL CMTRAN(Kn,KC,Vn, Vcom,Enc,Ecc)
      Tec=Enc+Ecc
      Ta=Tec-Q(1)
      IF (Ta .GT. 0.0) goto 10
      Type 5, En
    5 Format(/'   *** Error in Subroutine NN3ALF; E(neut) at entry ='
     & 1PE11.3/10x,'Set E(neut) = E(all alphas) = 0 and exit'/)
      Eneut=0.0
      Return
c       Last is an "error" return.
c
c    Next is to determine which of 14 reactions to use in rest of
c      computation.
   10 CALL P3ALPH(En)
c     That sets up the -Pbar- array of the P3ALF Common area
c    Choose branching by random number from this array.
      Pran=RAN(Irx)
      Nbrnch=1
      Do 12 J=1,13
      IF (Pran .LE. Pbar(J)) goto 14
   12 Nbrnch=Nbrnch+1
   14 Continue
c
c      Now have Nbrnch between 1 and 14.  The chosen reaction is
```

```
c       as follows:
c
c  Nbrnch      From (n,n')   or   From (n,alpha)
c  ------    -----------        --------------
c     1      Ex = 7.65 MeV
c     2          9.64
c     3                            Ex = 2.43 MeV
c     4                           2.8 + 3.05
c     5         10.84
c     6                               4.70
c     7      11.8+12.7+13.3
c     8                               6.76
c     9      14.08
c    10      16.1 - 18.0
c    11       Continuum
c    12                             11.5 group
c    13                             14.0 group
c    14                             Continuum
c
c
      Goto (20,20,40,40,20,40,20,40,20,20,15,40,40,38), Nbrnch
c
c  Next step is for the 12-C continuum, i.e. excitation of a 12-C
c    "excited state" having Ex > 18 MeV.  We get an approximate
c    n' energy from Function CHOOSN, and then get from that an
c    effective excitation energy for a "level" in the continuum
c    presumably excited in the reaction.
c
   15 Ta=Tec-Qcont
      Encom=RCKE(Kn,KC,Ta)
c       That's the maximum energy for the "continuum" neutron.
      F=0.065+0.001*En
      Temp=F*En
c       -Temp- determined empirically so that the CHOOSN function
c         deals with a neutron continuum spectrum similar to that
c         deduced by the nuclear model code TNG.
      Elow=0.0
      Entry=CHOOSN(Elow,Encom,Temp)
      Try=Entry*(Emass(Kn) + Emass(KC))/Emass(KC)
      Q(11)=Tec-Try
c
c    Next step is to get the outgoing neutron energy and direction
c     cosines in detector (laboratory) coordinates.
   20 Ta=Tec-Q(Nbrnch)
      Ena=Rmass*Ta
      IF (Ta .GT. TenMeV) Ena=RCKE(Kn,KC,Ta)
      Eca=Ta-Ena
      Vnca=VELOCITY(Kn,Ena)
      Vcca=VELOCITY(KC,Eca)
c       Choose neutron velocity direction in the center-of-mass
```

```
c        coordinates by random number.  An isotropic
c        distribution is assumed.
      CALL RVECT(Xb,Yb,Zb)
      Zx=Vnprx
      Zy=Vnpry
      Zz=Vnprz
c     Get neutron velocity components in "neutron" center-of-mass
c       coordinates:
      Vnxp=Xb*Vnca
      Vnyp=Yb*Vnca
      Vnzp=Zb*Vnca
c    Get carbon velocity components in "neutron" c.o.m. coordinates.
      Vcxp=-Xb*Vcca
      Vcyp=-Yb*Vcca
      Vczp=-Zb*Vcca
c
c     Transform neutron velocity components into "neutron" laboratory
c       coordinates:
      CALL LABTRAN(Vnxp,Vnyp,Vnzp, Vcom, Vnwx,Vnwy,Vnwz)
      Vneut=SQRT(Vnwx*Vnwx + Vnwy*Vnwy +Vnwz*Vnwz)
c       Now can get E(Neut) and dir. cosines in lab coordinates
c         for the outgoing neutron.
      Eneut=EFROMV(Kn,Vneut)
      CALL DIRCOS(Vnwx,Vnwy,Vnwz, Xb,Yb,Zb)
c      Xb,Yb,Zb are dir. cosines in "neutron" laboratory coordinates.
c       Now get dir. cosines in "detector" laboratory coordinates:
      CALL TRANSVEC(Zx,Zy,Zz)
      Vnprx=Xn
      Vnpry=Yn
      Vnprz=Zn
c  That takes care of the outgoing neutron, n', of reaction 1. (a)
c
c    Next step: the "fission" of the excited carbon ion.
c      The center-of-mass for this step is
c      the moving excited carbon ion.
      CALL LABTRAN(Vcxp,Vcyp,Vczp, Vcom, Vcx,Vcy,Vcz)
      Vcarb=SQRT(Vcx*Vcx + Vcy*Vcy + Vcz*Vcz)
c
c    Now test to see if ground state or excited state of 8-Be is
c       involved.
      Ta=Q(Nbrnch)-Qnn-E8Begs
      N8Bex=0
      IF (Nbrnch-4) 25,17,18
   17 IF (RAN(Irx) - 0.6) 25,25,19
   18 IF (Nbrnch .EQ. 11) goto 25
   19 Ta=Ta-E8Bex
      N8Bex=1
c     N8Bex=0 means ground state involved; N8Bex=1 means excited state.
   25 Eaa=Rmass2*Ta
      IF (Ta .GT. TenMeV) Eaa=RCKE(Ka,K8Be,Ta)
```

```
c     Check to see if a contiuum reaction -- if so test for the
c       3-body breakup mode -- if so get an alpha energy (by
c       random number in the Function CHOOSA).
      L3body=0
      IF (Nbrnch .LT. 11) goto 22
      Pcomp=(En - 20.0)/50.
c        The assumption of variable Pcomp: a simple increase in the
c    probability of 3-body breakup with increasing E(neutron)
      IF (RAN(Irx) .GE. Pcomp) goto 22
c      If it gets to here it's a 3-body breakup reaction.
      L3body=1
      Emax=Eaa
      Eaa=CHOOSA(Emax)
   22 Eba=Ta-Eaa
      Vaa=VELOCITY(Ka,Eaa)
c    The next portion gets the energy of the alpha from the fission
c  reaction 1. (b) or 2. (b) or of the the first alpha from the 3-body
c  breakup reaction 3. (b).
c
c     The angular distribution of the "fission" products is, perforce,
c       randomly chosen.
      CALL RVECT(Xc,Yc,Zc)
c     Velocities are slow enough for these heavier ions to do the
c       transformations non-relativistically.
      Va1x=Xc*Vaa
      Va1y=Yc*Vaa
      Va1z=Zc*Vaa + Vcarb
c  Va1x, Va1y, Va1z are components of alpha velocity in the "carbon-ion"
c      laboratory coordinate system.  Nonrelativistic transformation.
      Valph1=SQRT(Va1x*Va1x + Va1y*Va1y + Va1z*Va1z)
c  Valph1 is the same in the "detector" laboratory coordinate system as
c       it is in the "carbon-ion" laboratory coordinate system.
      Ealph1=EFROMV(Ka,Valph1)
      Echrg(1)=Ealph1
c    and that's it for the "first" alpha particle.
c
c    Now recheck for the 3-body breakup reaction again.
      IF (L3body .EQ. 0) goto 26
c
c   Next is for 3-body breakup reaction 3. (b).  Get 2d alpha information.
      Ea2=0.5*Eba
      Va2=VELOCITY(Ka,Ea2)
      Vopp=0.5*Vaa
c       (That's the component of velocity of the 2d and 3rd
c        alphas along a z-axis defined by the velocity of the
c        first alpha in the 3-body breakup.)
      Dirzet=Vopp/Va2
      Sintheta=SQRT(1.0-Dirzet*Dirzet)
      Phi=3.1415926*Ran(Irx)
c       For the 2d alpha; the 3rd will scatter at Phi + Pi
```

```
      Sinphi=SIN(Phi)
      Cosphi=COS(Phi)
c     Need to transform coordinates from those defined by the z-axis
c      determined by the velocity vector of the first alpha to the
c      "carbon-ion" coordinates.
      Xb=Sintheta*Cosphi
      Yb=Sintheta*Sinphi
      Zb=Dirzet
      Zx=-Xc
      Zy=-Yc
      Zz=-Zc
      CALL TRANSVEC(Zx,Zy,Zz)
c   Xn,Yn,Zn are now direction cosines of 2d alpha in "carbon-ion"
c     center-of-mass coordinates.
      Va2x=Va2*Xn
      Va2y=Va2*Yn
      Va2z=Va2*Zn + Vcarb
c       (Non-relativistic coord. transformation, again.)
      Valph2=SQRT(Va2x*Va2x + Va2y*Va2y + Va2z*Va2z)
      Ealph2=EFROMV(Ka,Valph2)
      Echrg(2)=Ealph2
c    And that's it for the 2d alpha.  Now for the third alpha --
c       its velocity, Va3, equals Va2 -- but in a
c       different direction
      Phi=Phi+3.1415926
      Sinphi=SIN(Phi)
      Cosphi=COS(Phi)
c    Get dir. cosines of 3d alpha in "carbon-ion" c.o.m. coordinates.
      Xb=Sintheta*Cosphi
      Yb=Sintheta*Sinphi
c    Zb is the same as for 2d alpha; so are Zx, Zy, and Zz.
      CALL TRANSVEC(Zx,Zy,Zz)
c    Now get velocity components of 3d alpha in "carbon-ion" lab. coords.
      Va3x=Va2*Xn
      Va3y=Va2*Yn
      Va3z=Va2*Zn + Vcarb
      Valph3=SQRT(Va3x*Va3x + Va3y*Va3y + Va3z*Va3z)
      Goto 60
c  End of 3-body breakup energetics and kinematics.
c
c      Next branch is "fission" of the moving 8-Be ion, 1. (b) or 2. (b).
c    The center of mass is the moving 8-Be ion.
   26 Vba=VELOCITY(K8Be,Eba)
      Vbwx=-Xc*Vba
      Vbwy=-Yc*Vba
      Vbwz=-Zc*Vba + Vcarb
      VBe = SQRT(Vbwx*Vbwx + Vbwy*Vbwy + Vbwz*Vbwz)
c    Now recall whether Ground state or excited state of 8-Be
c     is involved.
   21 Ta=E8Begs
```

```
      IF (N8Bex .EQ. 1) Ta=Ta+E8Bex
   28 Ea2=0.5*Ta
   29 Va2=VELOCITY(Ka,Ea2)
c     Again, perforce, isotropy in angular distribution of the two
c       alphas in the center-of-mass coordinates.
      CALL RVECT(Xc,Yc,Zc)
      Va2x=Xc*Va2
      Va2y=Yc*Va2
      Va2z=Zc*Va2+Vbe
      Valph2=SQRT(Va2x*Va2x + Va2y*Va2y + Va2z*Va2z)
      Ealph2=EFROMV(Ka,Valph2)
      Echrg(2)=Ealph2
c    and that's it for the second alpha.
c
c    Va3x=-Va2x and Va3y=-Va2y
      Va3z=-Zc*Va2+Vbe
      Valph3=SQRT(Va2x*Va2x + Va2y*Va2y + Va3z*Va3z)
      Goto 60
c  All done there, except to tidy up at very end.
c
c   Next sections are for the reactions  n + 12-C --> alpha + 9-Be.
c
c  Next 5 statements obtain an effective 9-Be "continuum" energy
c  level very approximately.  Two rationalizations: (1) probability
c  for this branch is small, a few percent of the  n + 3 alpha
c  reaction; and (2) the "continuum" is not known experimentally,
c  and the calculated "continuum" using TNG is very similar to that
c  calculated for the proton "continuum".
   38 Ta=Tec-Qaa
      Eamax=RCKE(Ka,K9Be,Ta)
      Temp=4.0
      Eatry=CHOOSP(Eamax,Temp)
      Try=Eatry*(Emass(Ka) + Emass(K9Be))/Emass(K9Be)
      Etry=RCKE(Ka,K9Be,Try)
      Try=Try*Eatry/Etry
      Q(14)=Tec-Try
c
c  Before continuing on alpha + 9-Be, determine if subsequent 9-Be
c    decay will be by proton emission.
      Npgo=0
      Excit9=Q(14)-Qna
      IF (Excit9 .LE. Ex9(1)) goto 40
      Prob=EXTERP(Ex9,Pprot,Excit9,Nx9,Nterp)
      IF (RAN(Irx) .LE. Prob) Npgo=1
c  OK.  Npgo=1 means proton decay of 9-Be; Npgo = 0 means alpha decay
c    of 9-Be.  In either case first work on  alpha + 9-Be energetics.
c  Get information on the alpha.
   40 Ta=Tec-Q(Nbrnch)
      Ealpha=RCKE(Ka,K9Be,Ta)
      Va1=VELOCITY(Ka,Ealpha)
```

```
      CALL RVECT(Xa,Ya,Za)
      Va1x=Xa*Va1
      Va1y=Ya*Va1
      Va1z=Za*Va1
c  Now transform to neutron laboratory coordinates.
      CALL LABTRAN(Va1x,Va1y,Va1z, Vcom, Vx,Vy,Vz)
c  ... done.  Vx, Vy, Vz are velocity components of alpha in the
c     neutron lab. coordinates.
      Va=SQRT(Vx*Vx + Vy*Vy + Vz*Vz)
      Ea1=EFROMV(Ka,Va)
      Echrg(1)=Ea1
c     That's it for the (first) alpha.
c
c  Now get 9-Be motion into detector coordinates.  We have to get back
c    to detector coordinates because we still have to get information
c    on the neutron in those coordinates.
      E9Be=Ta-Ealpha
      V9Bec=VELOCITY(K9Be,E9Be)
      V9xc=-Xa*V9Bec
      V9yc=-Ya*V9Bec
      V9zc=-Za*V9Bec
      CALL LABTRAN(V9xc,V9yc,V9zc, Vcom, V9x,V9y,V9z)
      V9Be=SQRT(V9x*V9x + V9y*V9y + V9z*V9z)
      CALL DIRCOS(V9x,V9y,V9z, Xb,Yb,Zb)
      Zx=Vnprx
      Zy=Vnpry
      Zz=Vnprz
      CALL TRANSVEC(Zx,Zy,Zz)
c  Now have 9-Be in detector laboratory coordinates; its direction
c   cosines are  Xn, Yn, and Zn.
c
c  First decide if next reaction is reaction 7. (b).
      IF (Npgo .EQ. 1) goto 75
c  Program counter to here, then not 7. (b), so try for 6. (b).
      IF (Nbrnch .EQ. 3) goto 48
      IF (Nbrnch .EQ. 6  .AND.  Ran(Irx) .LT. 0.87) goto 50
      IF (Nbrnch .EQ. 8  .AND.  Ran(Irx) .LT. 0.45) goto 50
      IF (Nbrnch .EQ. 12 .AND.  Ran(Irx) .LT. 0.88) goto 50
      IF (Nbrnch .EQ. 13 .AND.  Ran(Irx) .LT. 0.60) goto 50
c  If program gets to here it wasn't  6. (b).
c  Choice of  4. (b)  or  5. (b)  depends only on the 9-Be level.
      Qq=Qnn+E8Begs
c  So, next is "fission" of 9-Be --> n + 8-Be.  Determine which
c        8-Be state is involved.
      N8Bex=0
      IF (Nbrnch .LT. 8) goto42
      N8Bex=1
      Qq=Qq+E8Bex
   42 Ta=Q(Nbrnch)-Qq
c   Get information on the neutron first.
```

```
      Enn=RCKE(Kn,K8Be,Ta)
      Vnn=VELOCITY(Kn,Enn)
      CALL RVECT(Xa,Ya,Za)
      Vnx=Xa*Vnn
      Vny=Ya*Vnn
      Vnz=Za*Vnn
c  Transform velocity components to  9-Be  laboratory coordinates.
      CALL LABTRAN(Vnx,Vny,Vnz, V9Be, Vx,Vy,Vz)
c     ... done.  Vx, Vy, Vz are the desired velocity components.
      Vneutr=SQRT(Vx*Vx + Vy*Vy + Vz*Vz)
      Eneut=EFROMV(Kn,Vneutr)
      CALL DIRCOS(Vx,Vy,Vz, Xb,Yb,Zb)
      Zx=Xn
      Zy=Yn
      Zz=Zn
      CALL TRANSVEC(Zx,Zy,Zz)
c   and now have neutron's direction cosines in detector coordinates
      Vnprx=Xn
      Vnpry=Yn
      Vnprz=Zn
c    so that takes care of the neutron for reactions  4. (b) and 5. (b)
c  Now need to get motion of 8-Be in the 9-Be lab. coordinates.
      E8Be=Ta-Enn
      V8Be=VELOCITY(K8Be,E8Be)
      V8x=-Xa*V8Be
      V8y=-Ya*V8Be
      V8z=-Za*V8Be + V9Be
      VBe=SQRT(V8x*V8x + V8y*V8y + V8z*V8z)
c  Rest of computation same as for 1. (c) or 2. (c)
      Goto 21
c
c     Coming down the home stretch!!  Next is for  9-Be --> alpha + 5-He
c   reaction  6. (b).
c   First look at case where the Ex=2.43 MeV state of 9-Be decays into
c   alpha + 5-He.  This is clearly an unusual decay mode, since the Q-
c   value for decay of 9-Be into alpha + 5-He is 2.46 MeV, or some 30
c   keV larger than Ex.  However both the level in 9-Be and the ground
c   state in 5-He are quite broad, and the decay mechanism must take
c   these widths into account.  Programming in such widths seems a bit
c   much for the present purpose.  Instead we will simply note that on
c   the average there is no residual kinetic energy in the 9-Be center
c   of mass to be shared by the alpha and the 5-He ion after the decay.
c   Hence V(alpha2) = V(5-He) = V(9-Be) in the lab. coordinates
   48 Ea2=EFROMV(Ka,V9Be)
      Echrg(2)=Ea2
      V5He=V9Be
c    Also the dir. cosines of the 5-He ion in the detector lab. coords.
c     are the same as the dir. cosines of the 9-Be (i.e., Xn,Yn,Zn).
      Goto 55
c
```

```
c  Decay of other 9-Be levels will involve some c.o.m. kinetic energy.
   50 Qq=Qnn+QBa-QBn
      Ta=Q(Nbrnch)-Qq
      Ea2c=RCKE(Ka,K5He,Ta)
c  That's the energy of the 2d alpha in the 9-Be center of mass.
      Va2c=VELOCITY(Ka,Ea2c)
      CALL RVECT(Xa,Ya,Za)
c    Again, isotropy in the decay process in the center of mass.
      Va2x=Xa*Va2c
      Va2y=Ya*Va2c
      Va2z=Za*Va2c + V9Be
c    and again, a non-relativistic transformation to lab. coordinates.
      Va2=SQRT(Va2x*Va2x + Va2y*Va2y + Va2z*Va2z)
      Ea2=EFROMV(Ka,Va2)
      Echrg(2)=Ea2
c    So -- finished with alpha from 9-Be decay.  Now set up the motion
c     of the 5-He ion in detector lab. coordinates (remember, we still
c     have the neutron's parameters to get into detector lab coords.).
      E5Hec=Ta-Ea2c
      V5Hec=VELOCITY(K5He,E5Hec)
      V5Hex=-Xa*V5Hec
      V5Hey=-Ya*V5Hec
      V5Hez=-Za*V5Hec + V9Be
c    and once more a non-relativistic transformation, this time to get
c      the motion of the 5-He ion in the 9-Be lab. coordinates.
      V5He=SQRT(V5Hex*V5Hex + V5Hey*V5Hey + V5Hez*V5Hez)
      CALL DIRCOS(V5Hex,V5Hey,V5Hez, Xb,Yb,Zb)
c   Recall 9-Be ion has dir. cosines Xn,Yn,Zn in detector lab. coords.
      Zx=Xn
      Zy=Yn
      Zz=Zn
      CALL TRANSVEC(Zx,Zy,Zz)
C  Now we have the 5-He ion dir. cosines in detector lab. coordinates;
c    the direction cosines are Xn, Yn, Zn.  So now to the decay of the
c    5-He into a neutron and an alpha.  Get neutron information first.
   55 Ta=Q5He
      Ena=RCKE(Kn,Ka,Ta)
      Vnc=VELOCITY(Kn,Ena)
      CALL RVECT(Xa,Ya,Za)
c     once more, isotropy in the decay.
      Vnxc=Xa*Vnc
      Vnyc=Ya*Vnc
      Vnzc=Za*Vnc
c   Transform neutron's velocity components from 5-He c.o.m. coords.
c    to 5-He lab. coords.
      CALL LABTRAN(Vnxc,Vnyc,Vnzc, V5He, Vx,Vy,Vz)
c   Got them.  Vx,Vy,Vz are neutron's velocity components in 5-He c.o.m.
      Vneut=SQRT(Vx*Vx + Vy*Vy + Vz*Vz)
      Eneut=EFROMV(Kn,Vneut)
c   Eneut=E(neutron) in lab. coords.  Now get dir. cosines in detector
```

```
c     lab. coordinates.
      CALL DIRCOS(Vx,Vy,Vz, Xb,Yb,Zb)
      Zx=Xn
      Zy=Yn
      Zz=Zn
      CALL TRANSVEC(Zx,Zy,Zz)
      Vnprx=Xn
      Vnpry=Yn
      Vnprz=Zn
c    Whew!!  That's it for the neutron.  Now for the final alpha.
      Ea3c=Ta-Ena
      Va3c=VELOCITY(Ka,Ea3c)
      Va3x=-Xa*Va3c
      Va3y=-Ya*Va3c
      Va3z=-Za*Va3c
      CALL LABTRAN(Va3x,Va3y,Va3z, V5He, Vx,Vy,Vz)
      Valph3=SQRT(Vx*Vx + Vy*Vy + Vz*Vz)
c
c   All that's left is to finish up on the third alpha.
   60 Ealph3=EFROMV(Ka,Valph3)
      Echrg(3)=Ealph3
      Goto 90
c  END of (n,n 3-alpha) reaction computation.
c
c  Next portion of programming for 9-Be --> p + 8-Li decay.
c    Set outgoing neutron energy to zero to begin with.
   75 Eneut=0.0
      Egamma=0.0
      Eleftov=0.0
      CALL PP8LI(Excit9,V9Be,Egamma)
c
c  That's it.  At the end of this section the Echrg array should be:
c       Echrg(1) = First alpha from n + 12-C --> alpha + 9-Be
c       Echrg(2) = Escaped proton information, if it escaped.
c       Echrg(4) = Proton from 9-Be --> p + 8-Li
c       Echrg(3), (5), (6) from routine ELI8DK.
c
c  Final bit of business.
   90 Nelm=5
      CALL BANKR2
      Eneut2=ABS(Eneut2)
      IF (Egamma .GT. 0.0) CALL PHOTON(Egamma)
      Return
      END
```

```
C   This is file NP.FOR
c
c   Purpose is to compute the energy of the outgoing proton from the
c  reaction  n + 12-C --> p + 12B and to check for its possible
c  escape from the detector and account for the energy loss if it does.
c  The ground state and first four excited states of 12-B are stable
c  against particle emission; the programming chooses which of these
c  five states is the state excited by the incident neutron from a
c  table of probabilities generated from cross sections derived from
c  the Hauser-Feshback code TNG developed by C. Y. Fu.
c
      Subroutine NP
C
      Common /RANDM/  Irx
      Common /COLLIS/ Nelm,Echrg(6)
      Common /NAID/   Rad,Ht,Rc,Rz
      Common /VECTOR/ Xpn,Ypn,Zpn, Xn,Yn,Zn
      Common /NEUTRN/ SPDSQ, U, V, W, Xneut, Yneut, Zneut
      Common /MASSES/ Emass(19)
      Common /PROTON/ Noprot,Range(80),Proten(80)
      Common /PPOLAR/ X(37),Ptheta(37),Npolar
C
      Dimension Ei(12),Pgs(12),P1ex(12),P2ex(12),P3ex(12),Qex(5)
      Dimension Px(4)
      Equivalence (Qex(1),Q)
c
c  Next are Q values for the 12-B ground and first 4 excited states.
      Data Qex/12.613, 13.566, 14.287, 15.233, 15.333/
c  Next arrays are used to determine which bound state of 12-B was
c    populated.  Pgs, P1ex, P2ex and P3ex are cumulative probabilities.
      Data Ei/14.75, 15.5, 16.5, 17.0, 18.0, 18.25, 19.0, 20.0, 21.0,
     Z  23.0, 25.0, 40.0/
      Data Pgs/1.0, 0.691, 0.468, 0.368, 0.287, 0.279, 0.246, 0.224,
     Z  0.215, 0.203, 0.198, 0.180/
      Data P1ex/1.0, 1.0, 0.85, 0.779, 0.658, 0.646, 0.592, 0.552,
     Z  0.53, 0.511, 0.502, 0.475/
      Data P2ex/1.0, 1.0, 1.0, 0.985, 0.904, 0.894, 0.857, 0.827,
     Z  0.808, 0.79, 0.782, 0.762/
      Data P3ex/1.0, 1.0, 1.0, 0.998, 0.976, 0.974, 0.966, 0.959,
     Z  0.955, 0.95, 0.947, 0.939/
      Data Npolar/37/
c  Next array is used also in Subroutines NPN and N2N.
      Data X /1.0, .99619, .98481, .965926, .939693,
c       This table is COS(Theta) for theta every 5 degrees.
     &  0.90631, .866025, .81915, .76604, .707107, .64279, .57358,
     &  0.5, .42262, .34202, .25882, .17305, .081557, 0.0, -.081557,
     &  -.17305, -.25882, -.34202, -.42262, -0.5, -.57358, -.64279,
     &  -.707107, -.76604, -.81915, -.866025, -.90631, -.939693,
     &  -.965926, -.98481, -.99619, -1.0/
```

```
c  The next array is used to determine the polar scattering angle
c   of the proton, and is taken from measurements reported in
c   Nuclear Instruments and Methods 129 (1975) 241.  These data are
c   for En(lab)=56 MeV corresponding to En(c.o.m.)=51.7 MeV; the
c   measured angular distribution is strongly forward peaked for
c   all measured proton energies.
      Data Ptheta/0.0, 0.0091, 0.0385, 0.091, 0.1601, 0.2333, 0.3069,
     S 0.3782, 0.4456, 0.5078, 0.5644, 0.6151, 0.660, 0.6994, 0.7335,
     T 0.7629, 0.7879, 0.8091, 0.8269, 0.842, 0.857, 0.8717, 0.8861,
     U 0.9001, 0.9134, 0.9262, 0.9382, 0.9495, 0.9595, 0.9687, 0.9768,
     V 0.9838, 0.9896, 0.9941, 0.9974, 0.9993, 1.0/
C
      Data Npx/12/, Nterp/1/
      Data Kn/1/, K12C/7/, Kp/2/, K12B/6/
c
c       Go to Center-of-mass coordinates
      En=SPDSQ
      Vn = VELOCITY(Kn,En)
      CALL CMTRAN(Kn,K12C,Vn, Vcom,Eneut,Ecc)
      Tec=Ecc+Eneut
      Ta=Tec-Q
      IF (Ta .GT. 0.0) goto 2
      Type 100, En
  100 Format(/'   ***  Error in Subroutine NP; E(neut) at entry ='
     b 1PE11.3/10x,'Set E(Neut) = E(Proton) = 0 and exit'/)
      SPDSQ=0.0
      Echrg(1)=0.0
      Return
c
C         CHOOSE C.M. PROTON ENERGY
    2 Px(1)=EXTERP(Ei,Pgs,En,Npx,Nterp)
      Px(2)=EXTERP(Ei,P1ex,En,Npx,Nterp)
      Px(3)=EXTERP(Ei,P2ex,En,Npx,Nterp)
      Px(4)=EXTERP(Ei,P3ex,En,Npx,Nterp)
      Eran=RAN(Irx)
      Eleftov=0.0
      K=1
      Do 4 J=1,4
      IF (Eran .LE. Px(J)) goto 6
    4 K=K+1
    6 Ta=Tec-Qex(K)
      Egamma=Qex(K)-Qex(1)
      IF (K .NE. 4) goto 7
c  Third excited state of 12-B decays primarily to the first excited
c    state.  Other excited states decay primarily to the ground state.
      Egamma=Qex(2)-Qex(1)
      Eleftov=Qex(4)-Qex(2)
    7 Eprot=RCKE(Kp,K12B,Ta)
c
C         FIND THE COSINE  OF THE POLAR DIRECTION OF THE PROTON(C.M.)
```

```
   15 Rand=RAN(Irx)
   18 Ctheta = EXTERP(Ptheta,X,Rand,Npolar,Nterp)
c  Assumed angular distribution at En(c.o.m.) .GE. 51.7 MeV, but
c   modified toward isotropy for En(c.o.m.) < 51.7 MeV.
      IF (Tec .GE. 51.7) goto 20
      Ciso=1.0-2.0*Rand
      Slope=(Ctheta-Ciso)/(51.7-Qex(K))
      Ctheta=Slope*Ta
C     FIND THE SINE AND COSINE OF THE AZIMUTHAL DIRECTION OF THE
C      PROTON (C.M.) -- By Random-number Choice.
   20 Rann = 6.2831853*RAN(Irx)
      Sinphi = SIN(Rann)
      Cosphi = COS(Rann)
C    FIND THE C. M. DIRECTION COSINES OF THE PROTON.
      Sintheta=SQRT(1.-Ctheta*Ctheta)
      Xp=Sintheta*Cosphi
      Yp=Sintheta*Sinphi
      Zp=Ctheta
      Vpr=VELOCITY(Kp,Eprot)
C   NOW GET C. M. VELOCITY COMPONENTS OF THE PROTON.
      Vpx=Xp*Vpr
      Vpy=Yp*Vpr
      Vpz=Zp*Vpr
      CALL LABTRAN(Vpx,Vpy,Vpz, Vcom, Vx,Vy,Vz)
C        THAT HAS GOT THE VELOCITY COMPONENTS OF THE PROTON IN THE
C       "NEUTRON" LABORATORY COORDINATE SYSTEM.
      Vprot=SQRT(Vx*Vx +Vy*Vy +Vz*Vz)
C    FIND THE LAB ENERGY OF THE PROTON.
      Epl=EFROMV(Kp,Vprot)
c   Store information; then get distance from interaction point to
c    detector surface in the direction of the proton's velocity.
      Echrg(1)=Epl
      Echrg(2)=0.0
c  First check for very low energy proton; skip if so.
      IF (Epl .LE. 0.1) goto 70
      CALL DIRCOS(Vx,Vy,Vz, Xpn,Ypn,Zpn)
      CALL TRANSVEC(U,V,W)
      Protpl=PLNGTH(Xn,Yn,Zn, Xneut,Yneut,Zneut, Rad,Ht)
C    FIND RANGE OF THE PROTON.
      RPROT = EXTERP(Proten,Range,Epl,Noprot,Nterp)
C  DETERMINE THE AMOUNT OF THIS RANGE THAT LIES WITHIN THE SCINTILLATOR.
      RangeQ=Rprot-Protpl
      IF (RangeQ .LE. 0.0) goto 70
c       If it gets to here, proton "escapes" ...
      Eprotf=EXTERP(Range,Proten,RangeQ,Noprot,Nterp)
      Echrg(2)=Eprotf
c
C    FIND THE COMPONENTS OF THE 12B VELOCITY IN THE LAB.
   70 E12B=RCKE(K12B,Kp,Ta)
      V12B=VELOCITY(K12B,E12B)
```

```
      Vbcx=-Xp*V12B
      Vbcy=-Yp*V12B
      Vbcz=-Zp*V12B
c     (Recall that the direction cosines of the 12-B ion in the center
c      of mass are negatives of the direction cosines of the proton.)
      CALL LABTRAN(Vbcx,Vbcy,Vbcz, Vcom, Vbx,Vby,Vbz)
      V12B=SQRT(Vbx*Vbx + Vby*Vby + Vbz*Vbz)
C    FIND THE LAB ENERGY OF THE 12B.
      E12B = EFROMV(K12B,V12B)
      Echrg(3)=E12B
      Nelm=6
      SPDSQ=0.0
      CALL BANKR2
c  Check for possible gamma-ray interactions:
      IF (Egamma .GT. 0.0) CALL PHOTON(Egamma)
      IF (Egamma .LE. 0.0) Return
      IF (Eleftov .GT. 0.0) CALL PHOTON(Eleftov)
      Return
      END
```

```
C   This is file NPX.FOR
c
      Subroutine NPX
c  Purpose to compute energetics of the reactions starting with
c  n + 12-C --> p + 12-B.  Program first checks for populating the
c  residual 12-B ion in a low-lying (particle-bound) energy level,
c  and if so program reverts to Subroutine NP.  If not, then
c  test for possible second proton emission, or possible alpha
c  emission, and if neither of those then consider neutron emission.
c  The several possible "next" reactions are:
c     12-B --> p + 11-Be,
c     12-B --> alpha + 8-Li, or
c     12-B --> n + 11-B.
c  Following each of these reactions the program will consider
c  possible further particle emissions (if the excitation energy
c  is large enough) of the residual nuclei 11-Be, 8-Li or 11-B.
C
      Real*4 Li6pa, Li7pa, Li7pn, Li8pa
      Common /RANDM/  Irx
      Common /COLLIS/ Nelm,Echrg(6)
      Common /NAID/   Rad,Ht,Rc,Rz
      Common /VECTOR/ Xpn,Ypn,Zpn, Xn,Yn,Zn
      Common /NEUTRN/ SPDSQ, U, V, W, Xneut, Yneut, Zneut
      Common /MASSES/ Emass(19)
      Common /PROTON/ Noprot,Range(80),Proten(80)
      Common /PPOLAR/ X(37),Ptheta(37),N37
c  The arrays X and Ptheta are given in Subroutine NP
      Common /EXC11B/ Exc11(14),TenBpn,Li7pa
      Common /NEUTR2/ Eneut2, U2,V2,W2, X2,Y2,Z2
      Common /EXC10B/ Ex10B(9)
c  Array Ex10B is in subroutine NT.
      Common /EXC8LI/ E8Li(10)
c  Array E8Li is in Function EX8LI.
      Common /EXCTBE/ Ex10Be(4),Q9Bepn
c
      Dimension Ex12B(18), PP2P(18)
      Dimension Ex12B1(12),Ppalph(12)
c
c  Next array has a representation of excited states of 11-B.
      Data Exc11/0.0,2.125,4.445,5.02,6.743,6.792,7.286,7.978,
     a 8.56,8.92,9.2,9.88,10.33,11.25/
c     The last 5 decay by both alpha and gamma.
c
      Data Qnp/12.613/, Be11pp/14.096/, Be10pn/0.503/, Ka/3/
      Data Q9Bepn/6.812/, Nterp/1/, Npp2p/18/, B11pn/3.37/
      Data Kn/1/, K12C/7/, Kp/2/, K12B/6/, K11B/5/, K11Be/14/, K10Be/15/
      Data K10B/12/, TenBpn/11.46/, Li7pa/8.665/, Li6pa/4.46/, K9Be/4/
      Data Li7pn/2.033/, Li8pa/10.002/, K8Li/16/, Nppalf/12/
c
c  Next data array represent particle-bound states of 10-Be.
```

```
      Data Ex10Be/0.0, 3.368, 5.959, 6.263/
c  Next arrays to determine probability of second proton emission.
c    Calculations using TNG show that  (n,2p)/(n,p)  is a function
c    of the 12-B excitation, but essentially independent of incident
c    neutron energy.
      Data Ex12B/14.1, 14.45, 15.06,  16.0,  16.8,  18.0,  19.2, 20.0,
     a  22.0, 24.0, 25.6, 27.6, 29.4, 32.4, 34.6, 36.4, 39.0, 45.0/
      Data PP2P/0.0,0.0012, 0.0039, 0.011, 0.019, 0.032, 0.042,0.05,
     a 0.068, 0.085, 0.1, 0.13, 0.17, 0.24, 0.30, 0.35, 0.40, 0.42/
c
c  Next arrays to determine probability of alpha emission following
c    first proton emission.  Again, TNG calculations show dependence
c    on 12-B excitation, but essentially not on incident neutron energy.
      Data Ex12B1/10.003, 10.14, 11.4, 12.5, 13.6, 19.6, 22.0, 26.0,
     a   30.0, 38.0, 50.0, 100.0/
      Data Ppalph/0.0, 0.00036, 0.047, 0.1, 0.15, 0.15, 0.1, 0.075,
     a   0.048, 0.03, 0.024, 0.018/
c
C   The reaction scheme is:
c
c  (a)  n + 12-C --> p + 12-B;      then:
c       Decide if residual 12-B is in a bound state, and if so
c         go to Subroutine NP.  If not, then:
c  (b)      12-B --> n + 11-B;
c       Check for possible further neutron emission; if so, then:
c  (c)      11-B --> n + 10-B;
c
c  New additions (5/87):
c  (b')     12-B --> p + 11-Be, with possible further emission:
c  (c')     11-Be --> n + 10-Be, with possible further emission:
c  (d')     10-Be --> n + 9-Be (ground state, only)
c
c  Further additions (5/87):
c  (b")     12-B --> alpha + 8-Li, with possible further emission:
c  (c")     8-Li --> gamma or neutron decay.
c
c  Added 9/87:
c  (c3)     11-B --> alpha + 7-Li, with possible further 7-Li breakup.
c
c  Initial set-up:
      En2=0.0
      Do 1 I=1,6
   1  Echrg(I)=0.0
c       Go to Center-of-mass coordinates
      En=SPDSQ
      Vn = VELOCITY(Kn,En)
      CALL CMTRAN(Kn,K12C,Vn, Vcom,Eneut,Ecc)
      Tec=Ecc+Eneut
      Ta=Tec-Qnp
      IF (Ta .GT. 0.0) goto 2
```

```
      Type 100, En
  100 Format(/'   ***  Error in Subroutine NPX; E(neut) at entry ='
     b 1PE11.3/10x,'Set E(Neut) = E(Prot) = 0 and exit.'/)
      SPDSQ=0.0
      Return
c
c    First step -- decide if particle-stable state of 12-B is involved.
    2 Ratio=SIGCNP(En)/(SIGCNP(En) + SIGCNPN(En))
      IF (RAN(Irx) .GT. Ratio) goto 7
    3 CALL NP
      Return
c     (The point to this last bit is that originally the (n,p) and
c       (n,pn) reactions were considered entirely separately.  The
c       present amalgamation is, thus, a hybrid...)
c
c  Set up for first proton emission:
C         CHOOSE C.M. PROTON ENERGY using Function CHOOSP
    7 Tapn=Ta-B11pn
      IF (Tapn .LE. 0.0) goto 3
c       (Last statement just a check; probably shouldn't be needed.)
C
c   At this point we consider the proton spectrum for En = 60 MeV neutron
c  interactions with 12-C as reported by Brady et al, Journal of Physics
c  G 10 (1984) 363, which shows sufficient enhancement of the population
c  of (unbound) levels at about 4.5 and 8.3 MeV in 12-B to be worth
c  programming.  Thus ...
      IF (En .LE. 34.0) goto 8
      Enhanc=Ratio*(En-34.0)/50.0
      Excit=4.5
      Try=Ta-Excit
      Rani=RAN(Irx)
      IF (Rani .LE. Enhanc) goto 12
      IF (En .LE. 39.0) goto 8
      Excit=8.3
      Try=Ta-Excit
      Enhanc2=Enhanc+Ratio*(En-39.0)/30.0
      IF (Rani .LE. Enhanc2) goto 12
c
c  Program counter to here -- treat proton output as "continuum"
    8 Epcom=RCKE(Kp,K12B,Tapn)
c   Epcom is the maximum energy the proton can have in the center of mass
      F=0.1245+0.001*ABS(En-45.0)
      Temp=F*En
c  Temp value chosen empirically so that CHOOSP gives a reasonable
c   representation of the proton "continuum" as calculated by the
c   nuclear model code TNG of C. Y. Fu.
      Eprot = CHOOSP(Epcom,Temp)
c   The difference in energy between Epcom and Eprot could be
c    interpreted as the energy of a "virtual" energy level in the 12-B
c    nucleus.  The effect of this "level" should be to increase
```

```
c    the value of Q by the "virtual" excitation energy.
      Try=Eprot*(Emass(Kp)+Emass(K12B))/Emass(K12B)
c       That's approximately the "total available energy" that
c        would yield Eprot from the function RCKE.
      Eptry=RCKE(Kp,K12B,Try)
      Try=Try*Eprot/Eptry
c       (Iterate once on TRY for slightly more accuracy.)
      Excit=Ta-Try
c       EXCIT  should be close to the "virtual" excitation energy
c         of the residual 12-B ion.
      IF (Excit .LE. B11pn) goto 3
c  Last is a check, mainly on possible single-precision round-off error.
c
   12 Qex=Qnp + Excit
      Eprot=RCKE(Kp,K12B,Try)
c
C         FIND THE COSINE  OF THE POLAR DIRECTION OF THE PROTON(C.M.)
   15 Rand=RAN(IRX)
   18 Ctheta = EXTERP(Ptheta,X,Rand,N37,Nterp)
      IF (Tec .GE. 51.7) goto 20
      Ciso=1.0-2.0*Rand
      Slope=(Ctheta-Ciso)/(51.7-Qex)
      Ctheta=Slope*(Tec-Qex)
C     FIND THE SINE AND COSINE OF THE AZIMUTHAL DIRECTION OF THE
C      PROTON (C.M.) -- By Random-number Choice.
   20 Rann = 6.2831853*RAN(Irx)
      Sinphi = SIN(Rann)
      Cosphi = COS(Rann)
C    FIND THE C. M. DIRECTION COSINES OF THE PROTON.
      Sintheta=SQRT(1.-Ctheta*Ctheta)
      Xp=Sintheta*Cosphi
      Yp=Sintheta*Sinphi
      Zp=Ctheta
      Vpr=VELOCITY(Kp,Eprot)
C   NOW GET C. M. VELOCITY COMPONENTS OF THE PROTON
      Vpx=Xp*Vpr
      Vpy=Yp*Vpr
      Vpz=Zp*Vpr
      CALL LABTRAN(Vpx,Vpy,Vpz, Vcom, Vx,Vy,Vz)
C   THAT HAS GOT THE VELOCITY COMPONENTS OF THE PROTON IN THE
C       "NEUTRON" LABORATORY COORDINATE SYSTEM.
      Vprot=SQRT(Vx*Vx + Vy*Vy + Vz*Vz)
C    FIND THE LAB ENERGY OF THE PROTON.
      Epl=EFROMV(Kp,Vprot)
c   Store information; then get distance from interaction point to
c    detector surface in the direction of the proton's velocity.
      Echrg(1)=Epl
c  Get proton dir. cosines in "detector" laboratory coord. system.
      CALL DIRCOS(Vx,Vy,Vz, Xpn,Ypn,Zpn)
      CALL TRANSVEC(U,V,W)
```

```
c    Done.  Now test for proton escape from detector.
      IF (Epl .LE. 0.1) goto 70
      Protpl=PLNGTH(Xn,Yn,Zn, Xneut,Yneut,Zneut, Rad,Ht)
C    FIND RANGE OF THE PROTON.
      RPROT = EXTERP(Proten,Range,Epl,Noprot,Nterp)
C  DETERMINE THE AMOUNT OF THIS RANGE THAT LIES WITHIN THE SCINTILLATOR.
      RangeQ=Rprot-Protpl
      IF (RangeQ .LE. 0.0) goto 70
c       If it gets to here, proton "escapes" ...
      Eprotf=EXTERP(Range,Proten,RangeQ,Noprot,Nterp)
      Echrg(2)=Eprotf
C
C    FIND THE COMPONENTS OF THE 12B VELOCITY IN THE LAB.
c    First adjust total available energy for the energy of the
c         "virtual" excited state.
   70 Taex=Tec-Qex
      E12B=RCKE(K12B,Kp,Taex)
      V12B=VELOCITY(K12B,E12B)
      Vbcx=-Xp*V12B
      Vbcy=-Yp*V12B
      Vbcz=-Zp*V12B
c     (Recall that the direction cosines of the 12-B ion in the center
c      of mass are negatives of the direction cosines of the proton.)
      CALL LABTRAN(Vbcx,Vbcy,Vbcz, Vcom, Vbx,Vby,Vbz)
      V12B=SQRT(Vbx*Vbx + Vby*Vby + Vbz*Vbz)
c
      CALL DIRCOS(Vbx,Vby,Vbz, Xpn,Ypn,Zpn)
      CALL TRANSVEC(U,V,W)
c  Now variables Xn,Yn,Zn = direction cosines of the motion of the
c     12-B in "detector" laboratory coordinate system.
c
c  New addition 5/87: check for second proton or alpha emission.
      IF (Excit .LE. Ex12B(1)) goto 72
c
c       SECOND PROTON OR ALPHA EMISSION
c    If program gets to here, enough excitation in 12-B for second
c     proton or possibly alpha emission.
      Fr=EXTERP(Ex12B,PP2P,Excit,Npp2p,Nterp)
      Rani=RAN(Irx)
      IF (Rani .LE. Fr) goto 71
      Fr=Fr+EXTERP(Ex12B1,Ppalph,Excit,Nppalf,Nterp)
      IF (Rani .GT. Fr) goto 72
c
C
C   ***********************************************************************
C   *                                                                     *
C   *                  ALPHA PLUS 8-LI                                    *
C   *                                                                     *
c   * Program counter to here means alpha emission:  12-B --> alpha + 8-Li
C   *                                                                     *
```

```
      Ta=Excit-Li8pa
      Excita=EX8LI(Excit)
      Egamma=0.0
      Eleftov=0.0
      IF (Excita .GT. Li7pn) goto 50
      Egamma=Excita
c    Either ground state or 1st excited state of 8-Li, and no neutron.
      SPDSQ=0.0
   50 Taex=Ta-Excita
      Epa=RCKE(Ka,K8Li,Taex)
      CALL RVECT(Xpa,Ypa,Zpa)
      Vpa=VELOCITY(Ka,Epa)
      Vacx=Xpa*Vpa
      Vacy=Ypa*Vpa
      Vacz=Zpa*Vpa
      CALL LABTRAN(Vacx,Vacy,Vacz, V12B, Vx,Vy,Vz)
      Valf=SQRT(Vx*Vx + Vy*Vy + Vz*Vz)
      Ealf=EFROMV(Ka,Valf)
      Echrg(4)=Ealf
c  That's it for the alpha; now get information on 8-Li ion.
      E8Lic=Taex-Epa
      V8Lic=VELOCITY(K8Li,E8Lic)
      Vax=-Xpa*V8Lic
      Vay=-Ypa*V8Lic
      Vaz=-Zpa*V8Lic + V12B
      V8Li=SQRT(Vax*Vax + Vay*Vay + Vaz*Vaz)
c  Check for further neutron emission by 8-Li ion.
      IF (SPDSQ .GT. 0.0) goto 52
c  Program counter to here = no neutron emission, so tidy up and exit.
      Echrg(3)=EFROMV(K8Li,V8Li)
      Goto 90
c
c      Next, set up for decay of 8-Li.
   52 CALL DIRCOS(Vax,Vay,Vaz, Xpn,Ypn,Zpn)
      Zx=Xn
      Zy=Yn
      Zz=Zn
      CALL TRANSVEC(Zx,Zy,Zz)
c  Ready to go to 8-Li decay subroutine.
      CALL ELI8DK(Excita,V8Li,Egamma)
c  Finished breaking up 8-Li, so finish off.
      Goto 90
c
C
C   ***********************************************************************
C   *                                                                     *
C   *                  PROTON PLUS 11-BE                                  *
C   *                                                                     *
c   *    Got to here: 2d PROTON emission to consider.                     *
C   *                                                                     *
```

```
   71 Ta=Excit-Be11pp
      Ep2com=RCKE(Kp,K11Be,Ta)
      Ehat=En-Qnp
      F=0.1245+0.001*ABS(Ehat-45.0)
      Temp=F*Ehat
      Eprot2=CHOOSP(Ep2com,Temp)
      Try2=Eprot2*(Emass(Kp) + Emass(K11Be))/Emass(K11Be)
      Ep2try=RCKE(Kp,K11Be,Try2)
c    and as done before, iterate once on Try2 for better precision
      Try2=Try2*Eprot2/Ep2try
      Excitp=Ta-Try2
      Egamma=0.0
      Eleftov=0.0
      IF (Excitp .GT. 1.6) goto 30
c  Low-energy excitation of 11-Be.  Check for E(gamma).
      IF (Excitp .LT. 0.3918) goto 29
      Excitp = 0.3198
      Egamma = 0.3198
c  Only one excited bound state of 11-Be.  However, no subsequent
c    neutron emission -- just (n,2p).
   29 SPDSQ=0.0
   30 Taex=Ta-Excitp
c  Get information on outgoing 2d proton.
      Epp=RCKE(Kp,K11Be,Taex)
c  Isotropy for 2d proton emission in center-of-mass coordinates (of
c     moving 12-B ion)
      CALL RVECT(Xp,Yp,Zp)
      Vpp=VELOCITY(Kp,Epp)
      Vpcx=Xp*Vpp
      Vpcy=Yp*Vpp
      Vpcz=Zp*Vpp
      CALL LABTRAN(Vpcx,Vpcy,Vpcz, V12B, Vpx,Vpy,Vpz)
      Vprot=SQRT(Vpx*Vpx + Vpy*Vpy + Vpz*Vpz)
      Eprot=EFROMV(Kp,Vprot)
      Echrg(5)=Eprot
c  Now check for 2d proton escape.
      CALL DIRCOS(Vpx,Vpy,Vpz, Xpn,Ypn,Zpn)
      Zx=Xn
      Zy=Yn
      Zz=Zn
      CALL TRANSVEC(Zx,Zy,Zz)
c  Now have 2d proton direction cosines in "detector" lab. coord. system.
c    Its direction cosines are Xn, Yn, Zn.
      Protpl=PLNGTH(Xn,Yn,Zn, Xneut,Yneut,Zneut, Rad,Ht)
      Rprot=EXTERP(Proten,Range, Eprot, Noprot,Nterp)
      RangeQ=Rprot-Protpl
      IF (RangeQ .LE. 0.0) goto 32
c  If program gets to here, 2d proton escapes detector.
      Echrg(6)=EXTERP(Range,Proten, RangeQ, Noprot,Nterp)
c  Now get 11-Be velocity and energy in lab. coord. system
```

```
   32 E11Be=Taex-Epp
      V11Be=VELOCITY(K11Be,E11Be)
      Vbx=-Xp*V11Be
      Vby=-Yp*V11Be
      Vbz=-Zp*V11Be + V12B
c  Again, non-relativistic transformation from c.o.m. to lab. coordinates
c    of the moving 12-B ion.
      V11Be=SQRT(Vbx*Vbx + Vby*Vby + Vbz*Vbz)
      IF (SPDSQ .GT. 0.0) goto 35
c  Program counter to here means no further neutron emission.  We
c   excited either the ground state or the 320-keV state in 11-Be.
   33 E11Be=EFROMV(K11Be,V11Be)
      Echrg(3)=E11Be
      Goto 90
c
C   ***********************************************************************
C   *                                                                     *
C   *          NEUTRON PLUS 10-BE                                         *
C   *                                                                     *
c   * If program goes to next step, then have (n,2pn) reaction to finish up.
c   *  Schematic will look something like the drawing in the N2N subroutine.
C   *                                                                     *
   35 CALL DIRCOS(Vbx,Vby,Vbz, Xpn,Ypn,Zpn)
      CALL TRANSVEC(Zx,Zy,Zz)
c  Now have 11-Be ion dir. cosines (i.e. Xn,Yn,Zn) in "detector" lab.
c   coordinate system.
      Ta=Excitp-Be10pn
      Encom=RCKE(Kn,K10Be,Ta)
      Ehat=Ehat-B11pp
      Fn=0.065+0.001*Ehat
      Temp=Fn*Ehat
      Eloww=0.0
c  Test if Eneut2 has a value left over from a previous "2n" reaction --
c   if so then force present neutron emission to populate a state in
c   10-Be having Ex < binding energy of 9-Be + n.
      IF (Eneut2 .LE. 0.0) goto 36
      Tryy=Encom-Q9Bepn
      IF (Tryy .GT. 0.0) Eloww=Tryy
   36 Enn=CHOOSN(Eloww,Encom,Temp)
      IF (Enn.GT.0.0) goto 37
      SPDSQ=0.0
      Goto 33
   37 Try=Enn*(Emass(Kn) + Emass(K10Be))/Emass(K10Be)
c  Once again, an iteration for precision.
      Entry=RCKE(Kn,K10Be,Try)
      Try=Try*Enn/Entry
      Excitn=Ta-Try
      Egamma=0.0
      Eleftov=0.0
      IF (Excitn .GT. Q9Bepn) goto 44
```

```
c
      K=1
c  Now pair -Excitn- with a level energy for 10-Be.
      Do 40 I=2,4
      IF (Excitn .LT. Ex10Be(I)) goto 42
   40 K=K+1
   42 Excitn=Ex10Be(K)
c    Set up gamma decay characteristics:
      IF (K .GE. 2) Egamma=Ex10Be(2)
      IF (K.EQ.3 .AND. RAN(Irx).GE.0.5) Egamma=Excitn
      Eleftov=Excitn-Egamma
c  Now get lab. coord. energy of emitted neutron.
c    Again, isotropy of emission in center of mass (of the 11-Be ion).
   44 Taex=Ta-Excitn
      Enn=RCKE(Kn,K10Be,Taex)
      CALL RVECT(Xp,Yp,Zp)
      Vnn=VELOCITY(Kn,Enn)
      Vncx=Xp*Vnn
      Vncy=Yp*Vnn
      Vncz=Zp*Vnn
      CALL LABTRAN(Vncx,Vncy,Vncz, V11Be, Vx,Vy,Vz)
      Vneut=SQRT(Vx*Vx + Vy*Vy + Vz*Vz)
      Eneut=EFROMV(Kn,Vneut)
      SPDSQ=Eneut
c  Done.  Now get neutron dir. cosines into "Detector" lab. coordinates.
      CALL DIRCOS(Vx,Vy,Vz, Xpn,Ypn,Zpn)
      Zx=Xn
      Zy=Yn
      Zz=Zn
      CALL TRANSVEC(Zx,Zy,Zz)
c  Done.  Xn,Yn,Zn are dir. cosines of neutron in "detector" lab. coords.
      U=Xn
      V=Yn
      W=Zn
c  Now get 10-Be energy in laboratory coordinates.
      E10Be=Taex-Enn
      V10Be=VELOCITY(K10Be,E10Be)
      Vbx=-Xp*V10Be
      Vby=-Yp*V10Be
      Vbz=-Zp*V10Be + V11Be
c  Non-relativistic transformation from c.o.m. to lab. coords.
      V10Bel=SQRT(Vbx*Vbx + Vby*Vby + Vbz*Vbz)
c
C   ***********************************************************************
C   *                                                                     *
C   *                 NEUTRON PLUS 9-BE                                   *
C   *                                                                     *
c   *   Test for possible SECOND NEUTRON emission.                        *
C   *                                                                     *
      IF (Excitn .LE. Q9Bepn) goto 60
```

```
c
c       SECOND NEUTRON:  10-Be --> n + 9-Be
      CALL DIRCOS(Vbx,Vby,Vbz, Xpn,Ypn,Zpn)
      CALL TRANSVEC(Zx,Zy,Zz)
c  Now Xn,Yn,Zn are dir. cosines of 10-Be ion in "detector" lab. coords.
      Ta=Excitn-Q9Bepn
      En2c=RCKE(Kn,K9Be,Ta)
      CALL RVECT(Xn2,Yn2,Zn2)
      Vn2=VELOCITY(Kn,En2c)
      Vn2x=Xn2*Vn2
      Vn2y=Yn2*Vn2
      Vn2z=Zn2*Vn2
      CALL LABTRAN(Vn2x,Vn2y,Vn2z, V10Bel, Vx,Vy,Vz)
      Vneut=SQRT(Vx*Vx + Vy*Vy + Vz*Vz)
      En2=EFROMV(Kn,Vneut)
      Eneut2=-En2
c  This negative is temporary, just to alert BANKER routine.
c  Now get direction cosines of 2d neutron into "detector" coords.
      Zx=Xn
      Zy=Yn
      Zz=Zn
      CALL DIRCOS(Vx,Vy,Vz, Xpn,Ypn,Zpn)
      CALL TRANSVEC(Zx,Zy,Zz)
c  Done.  Transfer to 2d neutron variables.
      U2=Xn
      V2=Yn
      W2=Zn
      X2=Xneut
      Y2=Yneut
      Z2=Zneut
c  and that's done.  Get energy of 9-Be.
      E9be=Ta-En2c
      V9Be=VELOCITY(K9Be,E9Be)
      Vbx=-Xn2*V9Be
      Vby=-Yn2*V9Be
      Vbz=-Zn2*V9Be
      CALL LABTRAN(Vbx,Vby,Vbz, V10Bel, Vx,Vy,Vz)
      V9Belab=SQRT(Vx*Vx + Vy*Vy + Vz*Vz)
      Echrg(3)=EFROMV(K9Be,V9Belab)
      Goto 90
c     END SECTION ON 10-Be --> n + 9-Be
c
c  Finish case where 10-Be is final heavy ion.
   60 Echrg(3)=EFROMV(K10Be,V10Bel)
      Goto 90
c     END OF THIS SECTION
c
c
c
c
```

```
C   ***********************************************************************
C   *                                                                     *
C   *                  NEUTRON PLUS 11-B                                  *
C   *                                                                     *
c   *          Next section for 12-B --> n + 11-B                         *
c   *                                                                     *
   72 Ta=Excit-B11pn
      Encom=RCKE(Kn,K11B,Ta)
      Ehat=En-Qnp
      F=0.065 + 0.001*Ehat
      Temp=F*Ehat
c    Temp value sort of empirically determined so that CHOOSN gives a
c     reasonable representation of the neutron "continuum" as calculated
c     by the nuclear model code TNG.
      Eloww=0.0
c  Test if Eneut2 has a value left over from a previous "2n" reaction --
c   if so then force the present neutron emission to populate a state
c   in 11-B having Ex < binding energy of 10-B + n.
      IF (Eneut2 .LE. 0.0) goto 73
      Tryy = Encom-TenBpn
      IF (Tryy .GT. 0.0) Eloww=Tryy
   73 Enn=CHOOSN(Eloww,Encom,Temp)
c
c   AND As observed when choosing E(proton) from a distribution (as done above)
c  the difference in energy between Encom and Enn could be interpreted as
c  a "Virtual" energy level in 11-B.
c
      Try=Enn*(Emass(Kn)+Emass(K11B))/Emass(K11B)
      Entry=RCKE(Kn,K11B,Try)
      Try=Try*Enn/Entry
      Excitn=Ta-Try
c    If EXCITN is relatively small, pair it up with a known excited
c       state in 11-B.
      Egamma=0.0
      Eleftov=0.0
      IF (Excitn .LT. TenBpn) goto 75
      IF (Excitn .GT. TenBpn+0.5) goto 80
      Excitn=TenBpn+0.25
      K=15
      Goto 79
c  (That covers alpha emission in competition with neutron emission...)
   75 K=1
      Do 74 I=2,14
      IF (Excitn .LT. Exc11(I)) goto 76
   74 K=K+1
   76 Excitn=Exc11(K)
      Egamma=Exc11(K)
c  Most 11-B levels decay predominantly by ground-state transitions;
c   however, for three levels the dominant decay transition is through
c   an excited state.  In such cases, there are at least two gamma rays
```

```
c   to be followed, including the ground-state transition of
c   the intermediate excited state.
      IF (K.EQ.8 .OR. K.EQ.9) Egamma=Exc11(2)
      IF (K .EQ. 11) Egamma=Exc11(3)
      Eleftov=Exc11(K)-Egamma
c  That's the "other" gamma radiation.
c
   79 Taex=Ta-Excitn
      Enn=RCKE(Kn,K11B,Taex)
c
   80 CALL RVECT(Xp,Yp,Zp)
      Vnn=VELOCITY(Kn,Enn)
      Vncx=Xp*Vnn
      Vncy=Yp*Vnn
      Vncz=Zp*Vnn
      CALL LABTRAN(Vncx,Vncy,Vncz, V12B, Vnx,Vny,Vnz)
      Vneut=SQRT(Vnx*Vnx + Vny*Vny + Vnz*Vnz)
      Eneut=EFROMV(Kn,Vneut)
      SPDSQ=Eneut
c     Now get "new" neutron direction cosines in the
c      "detector" laboratory coordinates.
      CALL DIRCOS(Vnx,Vny,Vnz, Xpn,Ypn,Zpn)
      Zx=Xn
      Zy=Yn
      Zz=Zn
      CALL TRANSVEC(Zx,Zy,Zz)
      U=Xn
      V=Yn
      W=Zn
c  and, finally, get the 11-B energy.
      Taex=Ta-Excitn
      E11B=RCKE(K11B,Kn,Taex)
      V11B=VELOCITY(K11B,E11B)
      Vbx=-Xp*V11B
      Vby=-Yp*V11B
      Vbz=-Zp*V11B
      CALL LABTRAN(Vbx,Vby,Vbz, V12B, Vx,Vy,Vz)
      V11B=SQRT(Vx*Vx + Vy*Vy + Vz*Vz)
c
c  At this point want to look for second neutron emission,
c     i.e. (n,p2n) reaction.
c  First check -EXCITN- of 11-B for possible alpha emission.
      IF (Excitn .LE. Li7pa) goto 88
      IF (K .EQ. 10) goto 88
      Tryn=RAN(Irx)
      IF (K.EQ.11 .AND. Tryn.LT.0.9) goto 88
      IF (K.EQ.13 .AND. Tryn.LT.0.0001) goto 88
c  If program counter gets to here, could be alpha or second
c    neutron emission.
c  First get moving 11-B ion into "detector" coordinates.
```

```
      CALL DIRCOS(Vx,Vy,Vz, Xpn,Ypn,Zpn)
      CALL TRANSVEC(Zx,Zy,Zz)
c  Done.  Xn,Yn,Zn are dir. cosines of 11-B motion in "detector" coords.
      IF (K.EQ.15 .AND. Tryn.LT.0.56) goto 81
      IF (Excitn .GT. TenBpn) goto 82
C
C
C   ***********************************************************************
C   *                                                                     *
C   *              ALPHA PLUS 7-LI                                        *
C   *                                                                     *
c   *    Program counter to here, it's  11-B --> 7-Li + alpha             *
C   *                                                                     *
   81 Egamma=0.0
      Eleftov=0.0
      Ta=Excitn-Li7pa
      CALL AP7LI(Ta,V11B,Egamma)
      Goto 90
c  END SECTION ON ALPHA PRODUCTION
C
C
C
C   ***********************************************************************
C   *                                                                     *
C   *                NEUTRON PLUS 10-B                                    *
C   *                                                                     *
C   *   Next is case of second neutron emission, 11-B --> n + 10-B.       *
C   *                                                                     *
   82 Ta=Excitn-TenBpn
      En2com=RCKE(Kn,K10B,Ta)
      Ehat=Ehat-B11pn
      Fn=0.065 + 0.001*Ehat
      Temp=Fn*Ehat
      Eloww=0.0
      En2=CHOOSN(Eloww,En2com,Temp)
      Try=En2*(Emass(Kn) + Emass(K10B))/Emass(K10B)
c  Iterate once for greater precision (since it costs very little)
      Entry=RCKE(Kn,K10B,Try)
      Try=Try*En2/Entry
      Excitn2=Ta-Try
      Egamma=0.0
      Eleftov=0.0
      Level=10
      IF (Excitn2 .GT. 6.11) goto 86
      K=1
c  Pair -EXCITN2- with 10-B energy level.
      Do 84 I=2,9
      IF (Excitn2 .LT. Ex10B(I)) goto 85
   84 K=K+1
   85 Excitn2=Ex10B(K)
```

```
      Level=K
c  See discussion following statement No. 18 of Subroutine NT for
c    gamma decay of levels in 10-B.
      IF (K .GT. 1) Egamma=Ex10B(2)
      Eleftov=Ex10B(K)-Egamma
c  Now get information on 2d neutron into "detector" lab. coords.
   86 Taex=Ta-Excitn2
      Enn=RCKE(Kn,K10B,Taex)
      CALL RVECT(Xn2,Yn2,Zn2)
      Vn2=VELOCITY(Kn,Enn)
      V2x=Xn2*Vn2
      V2y=Yn2*Vn2
      V2z=Zn2*Vn2
      CALL LABTRAN(V2x,V2y,V2z, V11B, Vx,Vy,Vz)
      Vneut2=SQRT(Vx*Vx + Vy*Vy + Vz*Vz)
      En2=EFROMV(Kn,Vneut2)
      Eneut2=-En2
c  The negative is temporary, just to alert BANKER routine.
c  Now get direction cosines of 2d neutron
      CALL DIRCOS(Vx,Vy,Vz, Xpn,Ypn,Zpn)
      Zx=Xn
      Zy=Yn
      Zz=Zn
      CALL TRANSVEC(Zx,Zy,Zz)
c  Done.  Xn,Yn,Zn are the needed direction cosines
c  Fill in rest of data for 2d neutron.
      U2=Xn
      V2=Yn
      W2=Zn
      X2=Xneut
c  Assumption: various heavy ions (12-C, 12-B, ... ) travel a very
c   short path compared to detector dimensions.
      Y2=Yneut
      Z2=Zneut
c  Done with 2d neutron; now get 10-B ion information.
      E10B=Taex-Enn
      V10B=VELOCITY(K10B,E10B)
      Vbx=-Xn2*V10B
      Vby=-Yn2*V10B
      Vbz=-Zn2*V10B + V11B
c  Again, non-relativistic transformation of c.o.m. --> lab. coords.
      V10Blab=SQRT(Vbx*Vbx + Vby*Vby + Vbz*Vbz)
c  Test for 10-B particle-emission decay:
      IF (Level .LE. 6) goto 87
      IF (Level.EQ.8 .AND. RAN(Irx).LT. 0.5) goto 87
c  Program counter to here, prepare for 10-B particle decay.
      Eleftov=0.0
      CALL DIRCOS(Vbx,Vby,Vbz, Xpn,Ypn,Zpn)
      CALL TRANSVEC(Zx,Zy,Zz)
c  All prepared.  Go get 'em, tiger.
```

```
      CALL TENBDK(Excitn2,V10Blab,Egamma)
      Goto 90
c  Tidy up (n,p2n) results:
   87 Echrg(3)=EFROMV(K10B,V10Blab)
      Goto 90
c     END THIS SECTION OF SECOND NEUTRON EMISSION
c
c  Tidy up (n,pn) results:
   88 E11B=EFROMV(K11B,V11B)
      Echrg(3)=E11B
c
   90 Nelm=7
      CALL BANKR2
c  Now correct the Eneut2 variable.
      Eneut2=ABS(Eneut2)
c  Now check for possible gamma-ray contributions
      IF (Egamma .GT. 0.0) CALL PHOTON(Egamma)
      IF (Egamma .LE. 0.0) Return
      IF (Eleftov .GT. 0.0) CALL PHOTON(Eleftov)
      Return
c
c        At end of this routine, Echrg(1) has E(proton) and
c     Echrg (2) has energy lost if proton escapes.
c   Rest of Echrg array will look like:
c
c    Reaction       (3)       (4)       (5)       (6)      SPDSQ   Eneut2
c  ----------------------------------------------------------------------
c      p + n      E(11-B)    0.0       0.0       0.0      E(n1)    ---
c     p + 2n      E(10-B)    0.0       0.0       0.0      E(n1)   -E(n2)
c    p + alpha    E(8-Li)  E(alpha)    0.0       0.0       0.0     ---
c  p + n + alpha  E(7-Li)  E(alpha)    0.0       0.0      E(n1)    ---
c  p + 2n+ alpha  E(6-Li)  E(alpha)    0.0       0.0      E(n1)   -E(n2)
c  p+d+2n+2alpha    E(d)   E(alpha)  E(alpha)    0.0      E(n1)   -E(n2)
c  p+t +n+2alpha    0.0    E(alpha)  E(alpha)   E(t)      E(n1)    ---
c      2p         E(11-Be)   0.0      E(p2)    p2-esc     0.0     ---
c    2p + n       E(10-Be)   0.0      E(p2)    p2-esc    E(n1)    ---
c    2p + 2n      E(9-Be)    0.0      E(p2)    p2-esc    E(n1)   -E(n2)
c
      END
```

```
C   This is file NT.FOR
c
      Subroutine NT
C  Purpose to compute energies of the triton and 10-B ion coming from
c  the collision reaction  n + 12-C --> t + 10-B which (reaction)
c  has cross sections in the 30 mb region around En = 40 MeV.
c  If the c.o.m. total kinetic energy is not too large, the
c  program will fix the 10-B excitation at one of the known low-
c  lying energy levels.  The triton scattering angle (or more
c  precisely, the cosine of the scattering angle) is chosen by
c  random number from Legendre polynomial fits to data for En
c  between 27 and 61 MeV from Subramanian, et al, Physical
c  Review C28, 521.
c
      Common /COLLIS/ Nelm, Echrg(6)
      Common /NEUTRN/ Eneut, U,V,W,X,Y,Z
      Common /MASSES/ Emass(19)
      Common /VECTOR/ Xpn,Ypn,Zpn, Xn,Yn,Zn
      Common /RANDM/  Irx
      Common /EXC10B/ Exc10(9)
      Dimension Epoly(3),B1(3),B2(3),B3(3),B4(3),B5(3),B6(3),Fi(6)
c  Next array represents low-lying excited states of 10-B
      Data Exc10/0.0, 0.7183, 1.7402, 2.154, 3.587, 4.774,
     a   5.11, 5.17, 5.92/
c  Next arrays are for Legendre polynomials representing angular
c    distributions of tritons.  These distributions are forward
c    peaked at all En.
      Data Ipoly/3/, Epoly/27.4, 39.7, 60.7/, B1/0.42035, 0.3074,
     x  0.3681/, B2/0.209, C.1459, 0.1619/, B3/0.0925, 0.1106, 0.1018/,
     y  B4/0.03296, 0.0228, 0.03733/, B5/0.01292, -0.01512, -0.00044/,
     z  B6/0.00382, -0.00692, -0.00318/
      Data Nfi/6/, Q/18.93/, Kn/1/, K12C/7/, Kt/13/, K10B/12/,Nterp/1/
c   START COMPUTATION.
      Do 1 I=1,6
    1 Echrg(I)=0.0
c  Go to center of mass coordinates.
      En=Eneut
      Eneut=0.0
      Vn=VELOCITY(Kn,En)
      CALL CMTRAN(Kn,K12C,Vn, Vcom,Enc,Ecc)
      Tec=Enc+Ecc
      Ta=Tec-Q
      IF (Ta .GT. 0.0) goto 2
      Type 100, En
  100 Format(/'   ***  Error in Subroutine NT; E(neut) at entry = '
     a  1PE11.3/10x,'Set E(neut) = E(Triton) = 0 and exit.'/)
      Return
c   Last is an error return.
c
c      Get center-of-mass energies, then transform to lab coordinate
```

```
c  energies.  First set up Legendre coeff. for En.
    2 Fi(1)=EXTERP(Epoly,B1,En,Ipoly,Nterp)
      Fi(2)=EXTERP(Epoly,B2,En,Ipoly,Nterp)
      Fi(3)=EXTERP(Epoly,B3,En,Ipoly,Nterp)
      Fi(4)=EXTERP(Epoly,B4,En,Ipoly,Nterp)
      Fi(5)=EXTERP(Epoly,B5,En,Ipoly,Nterp)
      Fi(6)=EXTERP(Epoly,B6,En,Ipoly,Nterp)
      Etcom=RCKE(Kt,K10B,Ta)
      Etrit=Etcom
      Excit=0.0
      Egamma=0.0
      Eleftov=0.0
      Level=1
      IF (Etcom .LT. 0.72) goto 9
      IF (RAN(Irx) .LT. 0.05) goto 9
c   Last is to enhance slightly the ground-state transition,
c       and is ad hoc.
      Level=10
      Temp=0.5+0.04*En
c    Assume same "continuum" distribution of tritons as is used for
c     protons.  It's an assumption!
      Etrit=CHOOSP(Etcom,Temp)
      Try=Etrit*(Emass(Kt) + Emass(K10B))/Emass(K10B)
      Etry=RCKE(Kt,K10B,Try)
c  Same level excitation energy determination procedure as used
c    for deuterons in subroutine ND.
      Try=Try*Etrit/Etry
      Excit=Ta-Try
c    If variable Excit is relatively small, pair it with a known
c     excited state in 10-B
      IF (Excit .GT. 6.11) goto 9
      K=1
      Do 17 I=2,9
      IF (Excit .LT. Exc10(I)) goto 18
   17 K=K+1
   18 Excit=Exc10(K)
      Level=K
c  Gamma decay of levels in 10-B strongly proceed via the first-excited
c   state of 10-B.  This means at least two photons per decay of an
c   excited state, one of which corresponds to the ground-state
c   transition of the first excited state.
      IF (K .GT. 1) Egamma=Exc10(2)
      Eleftov=Exc10(K)-Egamma
      Taex=Ta-Excit
      Etrit=RCKE(Kt,K10B,Taex)
    9 Qex=Q + Excit
c  Next get polar scattering angle for the triton from array Fi
      Ctheta=CHOOSL(Fi,Nfi)
c  Now get azimuthal scattering angle.
   20 Rann = 6.283185*RAN(Irx)
```

```
      Sinphi=SIN(Rann)
      Cosphi=COS(Rann)
      Sintheta=SQRT(1.0 - Ctheta*Ctheta)
      Cx=Sintheta*Cosphi
      Cy=Sintheta*Sinphi
      Cz=Ctheta
      Vtri=VELOCITY(Kt,Etrit)
      Vtx=Cx*Vtri
      Vty=Cy*Vtri
      Vtz=Cz*Vtri
      CALL LABTRAN(Vtx,Vty,Vtz, Vcom, Vx,Vy,Vz)
      Vt=SQRT(Vx*Vx + Vy*Vy + Vz*Vz)
      Ett=EFROMV(Kt,Vt)
      Echrg(1)=Ett
c  That's the energy for the triton.
c    Triton escape is assumed to be negligable.
c  So next get the energy of the recoil 10-B ion.
   10 Taex=Tec-Qex
      E10B=RCKE(K10B,Kt,Taex)
      V10B=VELOCITY(K10B,E10B)
      Vbx=-Cx*V10B
      Vby=-Cy*V10B
      Vbz=-Cz*V10B + Vcom
c    Last transforms to "neutron" Lab. coords. non-relativistically.
      V10B=SQRT(Vbx*Vbx + Vby*Vby + Vbz*Vbz)
c  Test for possible (highly-excited) 10-B ion particle decay.
      IF (Level .LE. 6) goto 12
      IF (Level.EQ.8 .AND. RAN(Irx).LT.0.5) goto 12
      Eleftov=0.0
c  Get 10-B ion direction cosines in "detector" lab. coordinates.
      CALL DIRCOS(Vbx,Vby,Vbz, Xpn,Ypn,Zpn)
      CALL TRANSVEC(U,V,W)
c  Done.  Now do decay of highly excited 10-B ion.
      CALL TENBDK(Excit,V10B,Egamma)
      Goto 16
   12 Echrg(3)=EFROMV(K10B,V10B)
c    and that's it for the 10-B ion.
   16 Nelm=11
      CALL BANKR2
c  Now check for possible gamma-ray contribution.
      IF (Egamma .GT. 0.0) CALL PHOTON(Egamma)
c  If "P.S.D." is "on" (see Subroutine Input), and if the last call
c    to PHOTON triggered an event subtraction, then on return
c    Egamma < 0.0; so Return.  Otherwise check for possible second
c    gamma ray.
      IF (Egamma .LE. 0.0) Return
      IF (Eleftov .GT. 0.0) CALL PHOTON(Eleftov)
      Return
      End
```

```
C   This is file P3ALPH.FOR
c
c Purpose to return array PBAR, the summed probabilities for the 14 (in
c effect) sub-reactions leading to the (n,n' 3alpha) break-up reaction.
c See Subroutine NN3ALF for the specific branching designations.
c
      SUBROUTINE P3ALPH(E)
c
      Common /P3ALF/ Pbar(13)
c
      Dimension Eofp(26),P1(26),P2(26),P3(26),P4(26),P5(26),P6(26),
     X P7(26),P8(26),P9(26),P10(26),P11(26),P12(26),P13(26)
c
      Data Eofp/9.7, 10.2,  10.5,  11.0,  11.85, 12.0,  12.5, 13.0,
     V 13.2,  13.7,  14.3,  15.3,  16.2,  17.5,  18.5,  19.6,  20.,
     W 22.,   23.2,  25.,   30.,   35.,   40.,   50.,   60.,   70./
      Data P1/1.0,   0.86,  0.672, 0.244, 0.105, 0.095, 0.074, 0.059,
     V 0.054, 0.045, 0.04,  0.032, 0.029, 0.031, 0.31,  0.034, 0.034,
     W 0.022, 0.017, 0.02,  0.026, 0.023, 0.016, 0.01,  0.0,   0.0/
      Data P2/1.0,   0.86,  0.672, 0.478, 0.476, 0.473, 0.493, 0.469,
     V 0.455, 0.43,  0.413, 0.369, 0.337, 0.322, 0.271, 0.238, 0.222,
     W 0.174, 0.180, 0.181, 0.183, 0.201, 0.196, 0.195, 0.195, 0.195/
      Data P3/1.0,   1.0,   0.943, 0.822, 0.748, 0.738, 0.729, 0.666,
     V 0.636, 0.577, 0.531, 0.449, 0.397, 0.369, 0.309, 0.272, 0.253,
     W 0.196, 0.196, 0.194, 0.191, 0.206, 0.196, 0.195, 0.195, 0.195/
      Data P4/1.0,   1.0,   1.0,   1.0,   1.0,   0.99,  0.955, 0.863,
     V 0.819, 0.73,  0.659, 0.536, 0.463, 0.422, 0.351, 0.309, 0.288,
     W 0.220, 0.214, 0.209, 0.199, 0.21,  0.196, 0.195, 0.195, 0.195/
      Data P5/1.0,   1.0,   1.0,   1.0,   1.0,   1.0,   0.991, 0.921,
     V 0.88,  0.79,  0.729, 0.601, 0.52,  0.472, 0.391, 0.346, 0.322,
     W 0.242, 0.229, 0.218, 0.203, 0.212, 0.196, 0.195, 0.195, 0.195/
      Data P6/1.0,   1.0,   1.0,   1.0,   1.0,   1.0,   1.0,   1.0,
     W 0.994, 0.875, 0.938, 0.802, 0.696, 0.601, 0.508, 0.447, 0.416,
     W 0.305, 0.278, 0.254, 0.222, 0.222, 0.201, 0.195, 0.195, 0.195/
      Data P7/1.0,   1.0,   1.0,   1.0,   1.0,   1.0,   1.0,   1.0,
     W 1.0,   1.0,   0.997, 0.907, 0.827, 0.766, 0.662, 0.598, 0.563,
     W 0.407, 0.349, 0.301, 0.276, 0.256, 0.217, 0.197, 0.195, 0.195/
      Data P8/1.0,   1.0,   1.0,   1.0,   1.0,   1.0,   1.0,   1.0,
     W 1.0,   1.0,   1.0,   1.0,   0.986, 0.96,  0.833, 0.755, 0.709,
     W 0.505, 0.425, 0.358, 0.301, 0.269, 0.224, 0.197, 0.195, 0.195/
      Data P9/1.0,   1.0,   1.0,   1.0,   1.0,   1.0,   1.0,   1.0,
     W 1.0,   1.0,   1.0,   1.0,   1.0,   1.0,   0.94,  0.792, 0.744,
     W 0.535, 0.452, 0.384, 0.317, 0.278, 0.229, 0.197, 0.195, 0.195/
      Data P10/1.0,  1.0,   1.0,   1.0,   1.0,   1.0,   1.0,   1.0,
     W 1.0,   1.0,   1.0,   1.0,   1.0,   1.0,   1.0,   0.985, 0.93,
     W 0.653, 0.533, 0.441, 0.373, 0.307, 0.247, 0.203, 0.195, 0.195/
      Data P11/1.0,  1.0,   1.0,   1.0,   1.0,   1.0,   1.0,   1.0,
     W 1.0,   1.0,   1.0,   1.0,   1.0,   1.0,   1.0,   0.985, 0.977,
     W 0.92,  0.894, 0.86,  0.81,  0.764, 0.745, 0.767, 0.765, 0.75/
      Data P12/1.0,  1.0,   1.0,   1.0,   1.0,   1.0,   1.0,   1.0,
```

```
     W 1.0,   1.0,   1.0,   1.0,   1.0,   1.0,   1.0,   1.0,   1.0,
     X 1.0,   0.98,  0.94,  0.845, 0.780, 0.753, 0.767, 0.765, 0.75/
      Data P13/1.0,  1.0,   1.0,   1.0,   1.0,   1.0,   1.0,   1.0,
     W 1.0,   1.0,   1.0,   1.0,   1.0,   1.0,   1.0,   1.0,   1.0,
     X 1.0,   1.0,   1.0,   0.96,  0.865, 0.809, 0.79,  0.765, 0.75/
c
      Data N/26/, Nterp/1/
c
      En=E
      Pbar(1) = EXTERP(Eofp, P1,En,N,Nterp)
      Pbar(2) = EXTERP(Eofp, P2,En,N,Nterp)
      Pbar(3) = EXTERP(Eofp, P3,En,N,Nterp)
      Pbar(4) = EXTERP(Eofp, P4,En,N,Nterp)
      Pbar(5) = EXTERP(Eofp, P5,En,N,Nterp)
      Pbar(6) = EXTERP(Eofp, P6,En,N,Nterp)
      Pbar(7) = EXTERP(Eofp, P7,En,N,Nterp)
      Pbar(8) = EXTERP(Eofp, P8,En,N,Nterp)
      Pbar(9) = EXTERP(Eofp, P9,En,N,Nterp)
      Pbar(10)= EXTERP(Eofp,P10,En,N,Nterp)
      Pbar(11)= EXTERP(Eofp,P11,En,N,Nterp)
      Pbar(12)= EXTERP(Eofp,P12,En,N,Nterp)
      Pbar(13)= EXTERP(Eofp,P13,En,N,Nterp)
c
      Return
      END
```

```
C  This is file PHOTON.FOR
c
c   Purpose is to following scattering of a photon in the detector until
c     the photon escapes or is totally absorbed.
c
      Subroutine PHOTON(Egamma)
c
c   Primary subroutine -- follows photon scattering, and at each interaction
c determines energy of scattered electron and converts to light units.
c Also determines if the electron escapes the detector and therefore
c only part of its energy is deposited in the detector.  Compton
c scattering only is considered in the scattering process until the
c photon energy becomes < 30 keV in which case total absorbtion of
c the remaining energy is assumed.  Pair production is not considered.
c
      Common /NEUTRN/ En, U,V,W,Xneut,Yneut,Zneut
      Common /NAID/ Rdet, Ht, Rc, Rz
      Common /SPOT/ X,Y,Z, Xnew,Ynew,Znew
      Common /CBET/ Bx,By,Bz, Xg,Yg,Zg
      Common /RANDM/ Ixx
      Common /COLLIS/ Nelm,Echrg(6)
      Common /GFLAG/  Igflag
c
      E=Egamma
      X=Xneut
      Y=Yneut
      Z=Zneut
      Rdetsq=Rdet*Rdet
      Amtlt=0.0
c Start off with assumed isotropic distribution of gamma ray at the
c  neutron interaction spot.  Gamma-ray angular distributions are not,
c  in general, isotropic, but they are symmetric about 90 deg, and
c  the non-isotropy is generally smaller than a factor of two.
      CALL RVECT(Cx,Cy,Cz)
c              Start loop on photon scattering:
    1 Sig=COMPSIG(E)
      Path=PLNGTH(Cx,Cy,Cz, X,Y,Z, Rdet,Ht)
      D=EXP(-Path*Sig)
      T=RAN(Ixx)
      IF (T .LT. D) goto 5
c    If program counter gets to here, a photon scattering took place.
      IF (E .LT. 0.03) goto 4
      Dzet=-ALOG(T)/Sig
      Xnew=X+Cx*Dzet
      Ynew=Y+Cy*Dzet
      Dsq=Xnew*Xnew + Ynew*Ynew
      IF (Dsq .GT. Rdetsq) goto 5
c Last 2 steps may be unnecessary check on single-precision arithmetic.
      Znew=Z+Cz*Dzet
      CALL COMPTN(E,Ebeta)
```

```
      CALL COMDCS(E,Ebeta)
      Amtlt=0.842*Ebeta + Amtlt
      Bpath=PLNGTH(Bx,By,Bz, Xnew,Ynew,Znew, Rdet,Ht)
      N=1
      Brange=BETARG(N,Ebeta)
      RangeQ=Brange-Bpath
      IF (RangeQ .LE. 0.0) goto 3
c If program counter gets to here, the electron escaped before losing
c   all of its energy.  (Actually not very accurate, for even
c   fast electrons get banged about and hardly ever travel in a
c   straight line.  But for the present program, this inaccuracy
c   isn't very important.)
      N=2
      Eblost=BETARG(N,RangeQ)
      Amtlt=Amtlt-0.842*Eblost
c Get scattered photon's energy, reset position coordinates and
c   direction cosines, and go back through the loop.
    3 E=E-Ebeta
      X=Xnew
      Y=Ynew
      Z=Znew
      Cx=Xg
      Cy=Yg
      Cz=Zg
      Goto 1
c Next is terminal step for photon with energy < 30 KeV.
    4 Amtlt=Amtlt+0.842*E
c End of routine -- deposit accumulated light in BANKER routine
    5 IF (Amtlt .LE. 0.0) Return
      Nelm=10
      Esave=Echrg(1)
      Echrg(1)=Amtlt
      CALL BANKR2
      Echrg(1)=Esave
c   If "P.S.D." is "on" (see BANKER subroutines) return with a negative
c value for Egamma as a signature to calling subroutine.
      IF (Igflag .EQ. 1) Egamma=-Egamma
      Return
      END
```

```
C   This is file PLNGTH.FOR
c
C   April 1986 ---
C       Purpose is to compute length of a vector with direction cosines
C       AX,AY,AZ from origin X,Y,Z to a surface of a cylinder of outer radius
c       R and length H.  Cartesian coordinates are used wherein the X-Y plane
c       is the 'front' surface of the cylinder, and the Z-axis is the
c       cylinder axis.
c
      Function PLNGTH(Ax,Ay,Az,  X,Y,Z,  R,H)
c
        IF (Az) 1,2,3
    1   Akzet=-Z/Az
        Goto 4
    2   Akzet=10000.
C     (It is assumed that 10000 is >>> cylinder dimensions.)
        IF (Z .LT. 0.0) Akzet=Z
        Goto 4
    3   Akzet=(H-Z)/Az
    4   Pl=Akzet
        Arsq= Ax*Ax+Ay*Ay
        IF (Arsq .LE. 1.0E-10) goto 5
        C=Ay*X-Ax*Y
        Argu=Arsq*R*R-C*C
        IF (Argu .GE. 0.0) goto 6
        Type 10, Argu,Arsq,C
   10   Format(//20x,'Problem in -PLNGTH-  Arguments='1PE10.3/
     x  25x,'ARSQ='E10.3,', C='E10.3,'.  Set Argument = 0.0')
        Type 11, X,Y,Z, Ax,Ay,Az
   11   Format(10x,'    Input X, Y, Z ='1P3E10.3/
     x   8x,'      and Dir. Cos. ='1P3E10.3/)
        Argu=0.0
    6   St=SQRT(Argu)
        Akrad=(St-Ax*X-Ay*Y)/Arsq
        IF (Akrad .LT. 0.0) Akrad=0.0
c        Last is to prevent a (small) negative value -- due to single-
c     precision round-off errors -- when values of X,Y place the
c     point essentially on the (curved) surface of the cylinder.
        Pl=Akrad
        IF (Akrad .GT. Akzet) Pl=Akzet
    5   PLNGTH=Pl
        Return
        END
```

```
C   This is file PP8LI.FOR
c
      Subroutine PP8LI(Excit,V9Be,Eg)
c
c Next portion of programming for 9-Be --> p + 8-Li decay.
c
      Real*4 Li8pp,Li7pn
      Common /MASSES/ Emass(19)
      Common /PROTON/ Noprot,Range(80),Proten(80)
      Common /NEUTRN/ Eneut, U,V,W, X,Y,Z
      Common /RANDM/  Irx
      Common /NAID/   Rad,Ht,R1,R2
      Common /COLLIS/ Nelm,Echrg(6)
      Common /VECTOR/ Xb,Yb,Zb, Xn,Yn,Zn
c At entry, Xn,Yn,Zn are dir. cos. of 9-Be ion motion in "detector"
c    coordinates.
c
      Data Li8pp/16.888/, Li7pn/2.033/, Kp/2/, K8Li/16/
c
      Ta=Excit-Li8pp
c Test for possible alert to this routine to do only proton decay,
c   i.e., no further decay of 8-Li to  n + 7-Li.
      IF (V9Be .GT. 0.0) goto 4
      V9Be=-V9Be
      Excitp=0.0
c Choose between ground state and first-excited state of 8-Li.
      IF (RAN(Irx) .LT. 0.3) Excitp=0.9808
      Goto 6
c     Next is for no limits on 8-Li excitation energy.
    4 Excitp=EXLI8(Excit)
c That gets 8-Li excitation energy.
      Ix=1
      IF (Excitp .GT. Li7pn) goto 7
    6 Eg=Excitp
      Ix=0
    7 Taex=Ta-Excitp
      Epp=RCKE(Kp,K8Li,Taex)
      Vpp=VELOCITY(Kp,Epp)
      CALL RVECT(Xp,Yp,Zp)
      Vpx=Xp*Vpp
      Vpy=Yp*Vpp
      Vpz=Zp*Vpp
      CALL LABTRAN(Vpx,Vpy,Vpz, V9Be, Vx,Vy,Vz)
      Vprot=SQRT(Vx*Vx + Vy*Vy + Vz*Vz)
      Eprot=EFROMV(Kp,Vprot)
      Echrg(4)=Eprot
c    Check for proton escape:
      CALL DIRCOS(Vx,Vy,Vz, Xb,Yb,Zb)
      Zx=Xn
      Zy=Yn
```

```
      Zz=Zn
      CALL TRANSVEC(Zx,Zy,Zz)
      Protpl=PLNGTH(Xn,Yn,Zn, X,Y,Z, Rad,Ht)
      Rprot=EXTERP(Proten,Range, Eprot, Noprot,1)
      RangeQ=Rprot-Protpl
      IF (RangeQ .LE. 0.0) goto 8
c Proton escapes.
      Echrg(2)=EXTERP(Range,Proten, RangeQ, Noprot,1)
c Now get 8-Li ion:
    8 E8Li=Taex-Epp
      V8Lic=VELOCITY(K8Li,E8Li)
      V8x=-Xp*V8Lic
      V8y=-Yp*V8Lic
      V8z=-Zp*V8Lic
      CALL LABTRAN(V8x,V8y,V8z, V9Be, Vx,Vy,Vz)
      V8Li=SQRT(Vx*Vx + Vy*Vy + Vz*Vz)
      IF (Ix .EQ. 1) goto 2
c  If Ix = 0, then no additional neutron decay. So tidy up and exit.
      Echrg(3)=EFROMV(K8Li,V8Li)
      Return
c
c Set up for 8-Li decay.
    2 CALL DIRCOS(Vx,Vy,Vz, Xb,Yb,Zb)
      CALL TRANSVEC(Zx,Zy,Zz)
c Set up done.  Get 8-Li decay.
      CALL ELI8DK(Excitp,V8Li,Egamma)
      Eg=Egamma
c That's that!
      Return
      END
```

```
C  This is file PROTN.FOR
cc
c Contains the block data for computing proton ranges.
c (Additions 6/87.)
c
      BLOCK DATA PROTN
      COMMON/PROTON/NOPROT,RANGE(80),PROTEN(80)
      DATA NOPROT/80/
c Ranges are in cm for NE-213.  These values are changed in the INPUT
c   subroutine for NE-110.
      DATA (RANGE(I),I=1,80)/ 2.500E-5, 1.0400E-4,
     a 1.5500E-4, 1.9500E-4, 2.3500E-4, 2.9500E-4, 4.5000E-4, 6.6000E-4,
     1 9.0000E-4, 1.1500E-3, 1.4400E-3, 1.8000E-3, 2.1500E-3, 2.5000E-3,
     2 3.5000E-3, 4.5000E-3, 5.6000E-3, 6.9000E-3, 8.3000E-3, 9.7000E-3,
     4 0.0113,    0.013,     0.0148,    0.0167,    0.0187,    0.0208,
     5 0.0230,    0.0252,    0.0276,    0.03,      0.0325,    0.0352,
     6 0.0379,    0.0407,    0.0461,    0.0466,    0.0496,    0.0528,
     7 0.0559,    0.0627,    0.0698,    0.0772,    0.0849,    0.0929,
     7 0.1012,    0.1098,    0.1142,    0.1255,    0.1374,    0.1906,
     8 0.2517,    0.3202,    0.3958,    0.4785,    0.568,     0.6642,
     9 0.7672,    0.8768,    0.993,     1.1062,    1.2349,    1.3699,
     A 1.5110,    1.6583,    1.8117,    1.9711,    2.2000,    2.3085,
     B 2.4856,    2.6683,    2.8568,    3.0509,    3.2506,    3.4557,
     C 3.6664,    3.8824,    4.1039,    4.3306,    4.5626,    8.670/
c
c Next are proton energies, in MeV.
      DATA (PROTEN(I),I=1,80)/0.01,     0.06,
     a 0.1,   0.13,  0.16,  0.2,   0.3,   0.4,   0.5,   0.6,   0.7,
     1 0.8,   0.9,   1.0,   1.2,   1.4,   1.6,   1.8,   2.0,   2.2,
     2 2.4,   2.6,   2.8,   3.0,   3.2,   3.4,   3.6,   3.8,   4.0,
     3 4.2,   4.4,   4.6,   4.8,   5.0,   5.2,   5.4,   5.6,   5.8,
     4 6.0,   6.4,   6.8,   7.2,   7.6,   8.0,   8.4,   8.8,   9.0,
     5 9.5,  10.0,  12.0,  14.0,  16.0,  18.0,  20.0,  22.0,  24.0,
     6 26.0, 28.0,  30.0,  32.0,  34.0,  36.0,  38.0,  40.0,  42.0,
     7 44.0, 46.0,  48.0,  50.0,  52.0,  54.0,  56.0,  58.0,  60.0,
     8 62.0, 64.0,  66.0,  68.0,  70.0, 100.0/
      END
```

```
c   This is file PSCAT.FOR
c
c Purpose is to do the computations for neutron-Carbon elastic and
c  inelastic scattering collisions.  Portions of the programming
c  are taken from the O5S coding.
c
      SUBROUTINE PSCAT
C
      Common /RANDM/ IRX
      Common /NEUTRN/ Eneut, U, V, W, X1, Y, Z
      Common /LGNDRE/ IC, E(220), F(6,220)
c See file LEGENDRE.FOR for the data in common /LGNDRE/ arrays.
      Common /COLLIS/ Nelm, Echrg(6)
      Common /CSCATT/ Xp,Yp,Zp, Vnca,Vcca,Vcm
      Dimension Fi(6),A1(220),B1(220),B2(220),B3(220),B4(220)
      Dimension B5(220),B6(220)
      Data Nthru/0/, Nterp/3/, Kn/1/, KC/7/, Nfi/6/
c
C     For the present programming to obtain the neutron's polar scattering
C      angle the Legendre polynomial "technique" is used.  The BLOCK DATA have
C      coefficients for E(neut) up to 20 MeV from the ENDF/B evaluation;
c      whether the values are correct or not I can't say.  For larger
c      E(neut) values are included which have been deduced from comparisons
c      with experimental angular distributions as 20.8, 26 and 40 MeV.
c
c     It appears, from the O5S coding, that the values of the Legendre
c      coefficients in the Block Data are tabulated for specific incident
c      neutron energies in MeV in the laboratory frame of reference, and the
c      values themselves are for angular distributions in the center of mass.
c
      If (Nthru .GT. 0) goto 10
c Set-up needed only once -- the first time through.
      Do 2 I=1,Ic
      A1(I)=E(I)
      B1(I)=F(1,I)
      B2(I)=F(2,I)
      B3(I)=F(3,I)
      B4(I)=F(4,I)
      B5(I)=F(5,I)
    2 B6(I)=F(6,I)
      Nthru=1
c
C * * * CHOOSE THE COSINE OF THE POLAR ANGLE OF THE OUTGOING NEUTRON.
   10 En=Eneut
      Vn=VELOCITY(Kn,En)
      CALL CMTRAN(Kn,KC,Vn, Vcom,Enc,Ecc)
      Vcm=Vcom
      Vnca=VELOCITY(Kn,Enc)
      Vcca=VELOCITY(KC,Ecc)
c   Vnca, Vcca = velocities of neutron and Carbon ion in center of mass
```

```
c
      Fi(1)=EXTERP(A1,B1,En,Ic,Nterp)
      Fi(2)=EXTERP(A1,B2,En,Ic,Nterp)
      Fi(3)=EXTERP(A1,B3,En,Ic,Nterp)
      Fi(4)=EXTERP(A1,B4,En,Ic,Nterp)
      Fi(5)=EXTERP(A1,B5,En,Ic,Nterp)
      Fi(6)=EXTERP(A1,B6,En,Ic,Nterp)
c
c Get polar scattering angle from function CHOOSL
      FMU = CHOOSL(Fi,NFi)
c
   24 SINPSI = SQRT ( 1. - FMU * FMU )
        RANN = 6.28318530*RAN(IRX)
        SINETA = SIN(RANN)
        COSETA = COS(RANN)
      Xp=Sinpsi*Coseta
      Yp=Sinpsi*Sineta
      Zp=Fmu
      CALL CSCAT
c         CSCAT finishes up -- gets new neutron energy, dir. cosines.
      Nelm=2
      CALL BANKR2
      Return
      END
```

```
C   This is file RCKE.FOR
c
      Function RCKE(N1,N2,TKE)
c
c   RCKE = Relativistically Correct Kinetic Energy
c       TKE is the total kinetic energy available in the center of mass
c       of the system of particles having masses EM1 and EM2.  RCKE
c       computes the kinetic energy for the particle having mass EM1.
c
      Real*8 Em1,Em2,E,Etot,Dhalf
      Common /MASSES/ Emass(19)
      Data Dhalf/0.5E+0/
c
      Em1=Emass(N1)
      Em2=Emass(N2)
      E=TKE
      Etot=E+Em1+Em2
      E=Dhalf*(Etot*Etot + Em1*Em1 - Em2*Em2)/Etot
      E=E-Em1
      RCKE=E
      Return
      END
c
C   This is file RVECT.FOR
c
c Purpose is to obtain a random unit vector with components
c   (i.e. direction cosines) Xn, Yn, Zn
      Subroutine RVECT(Xn,Yn,Zn)
c
        Real*8 Zet,S,D1
        Common /RANDM/ Ixx
        Data D1/1.0D+0/
c
        Z=1.0-2.0*RAN(IXX)
        ZN=Z
        Zet=Z
        THETA=6.283185*RAN(IXX)
        S=DSQRT(1.0-Zet*Zet)
        SINZ=S
        XN=COS(THETA)*SINZ
        YN=SIN(THETA)*SINZ
      Return
      END
```

```
C    This is file SEED.FOR
C       Purpose is to start the Random Number Generator
        Subroutine SEED(N)
        COMMON /RANDM/ Irx
        DIMENSION K(3)
        CHARACTER*8 BUF
        CALL TIME(Buf)
        TYPE 5,Buf
   5    FORMAT('  THE TIME IS 'A8)
        IF (N .LT. 0) RETURN
        DECODE(8,6,Buf) K
   6    FORMAT(I2,1X,I2,1X,I2)
        L=K(3)/2
        LP=K(3)-2*L
        IF (LP.EQ.0) K(3)=K(3)+1
        I=1000000000+K(1)*10000000+
     X  K(2)*10000+K(3)
        IRX=I
        Y=RAN(I)
        TYPE 8,Y
   8    FORMAT(/'                The First Random Number is ',0PE14.7/)
        RETURN
        END
```

```
C   This is file SIGCELAS.FOR
c     Purpose is to return a cross section (in barns) for elastic scattering
c      of Carbon by an incident neutron of energy En (in MeV).  These data are
c      taken from the ENDF/B-V Evaluation for En up to about 16 MeV.
c     Other data for En > 16 MeV were obtained by subtracting total
c       non-elastic cross sections from total cross sections.
c
      FUNCTION SIGCELAS(En)
      Dimension E(541),Sig(541)
      Data NN/541/
      Data (E(I),I=1,173)/
     W  2.530E-08, 1.0E-07, 1.0E-05, 0.001, 0.005, 0.01,
     X  0.015,  0.02,   0.04,   0.05,   0.075,  0.10,   0.125,  0.225,
     X  0.3250, 0.4250, 0.5250, 0.6250, 0.7250, 0.8500, 1.0000, 1.1000,
     Y  1.2000, 1.3000, 1.4000, 1.5000, 1.6000, 1.7000, 1.8000, 1.9000,
     Z  2.0000, 2.0250, 2.0500, 2.0520, 2.0540, 2.0560, 2.0580, 2.0600,
     X  2.0610, 2.0620, 2.0630, 2.0640, 2.0650, 2.0660, 2.0670, 2.0680,
     X  2.0690, 2.0700, 2.0710, 2.0720, 2.0730, 2.0740, 2.0750, 2.0760,
     X  2.0770, 2.0780, 2.0790, 2.0800, 2.0810, 2.0820, 2.0830, 2.0840,
     X  2.0850, 2.0860, 2.0870, 2.0880, 2.0890, 2.0900, 2.0910, 2.0920,
     X  2.0930, 2.0940, 2.0950, 2.0960, 2.0980, 2.1000, 2.1020, 2.1040,
     A  2.1060, 2.1080, 2.1100, 2.1140, 2.1180, 2.1200, 2.1400, 2.1600,
     B  2.1800, 2.2000, 2.2400, 2.2800, 2.3200, 2.36,   2.4000, 2.4400,
     C  2.4800, 2.5200, 2.5600, 2.6000, 2.6400, 2.6600, 2.6800, 2.7000,
     X  2.7200, 2.7400, 2.7600, 2.7800, 2.7900, 2.8000, 2.8040, 2.8060,
     P  2.8080, 2.8100, 2.8110, 2.8120, 2.8130, 2.8140, 2.8150, 2.8160,
     Q  2.8170, 2.8180, 2.8190, 2.8200, 2.8220, 2.8240, 2.8260, 2.8300,
     R  2.835,  2.8400, 2.8500, 2.8600, 2.8650, 2.8700, 2.8750, 2.8800,
     S  2.8850, 2.8900, 2.8950, 2.9000, 2.9050, 2.9100, 2.9150, 2.9200,
     T  2.9280, 2.9320, 2.9360, 2.9400, 2.9440, 2.9480, 2.9520, 2.9560,
     U  2.9600, 2.9640, 2.9680, 2.9720, 2.9760, 2.9800, 2.9840, 2.9880,
     V  2.9920, 2.9960, 3.0000, 3.0100, 3.0200, 3.0300, 3.0400, 3.0600,
     W  3.0800, 3.1000, 3.1200, 3.14,   3.1600, 3.1800, 3.20/
      Data (E(I), I=174,377)/
     X  3.2200, 3.2600, 3.3000, 3.3200, 3.3400, 3.36,   3.3800, 3.4000,
     X  3.4200, 3.4400, 3.4600, 3.4800, 3.5000, 3.52,   3.5400, 3.56,
     Y  3.5800, 3.6000, 3.6400, 3.66,   3.6800, 3.7000, 3.7400, 3.7800,
     Z  3.8000, 3.8400, 3.9200, 3.9400, 3.9800, 4.0000, 4.02,
     a  4.0400, 4.0600, 4.0800, 4.1000, 4.1100,
     b  4.1200, 4.1300, 4.1400, 4.1500, 4.1600, 4.1700, 4.1800, 4.1900,
     c  4.2000, 4.2200, 4.2300, 4.2400, 4.2500, 4.2600, 4.2700, 4.2800,
     d  4.2900, 4.3000, 4.3100, 4.3300, 4.3500, 4.3700, 4.3900, 4.4000,
     e  4.4200, 4.4400, 4.4600, 4.4800, 4.5000, 4.5400, 4.5600, 4.6000,
     f  4.6400, 4.6800, 4.7000, 4.7400, 4.8000, 4.8200, 4.8500, 4.9000,
     K  4.9194, 4.9300, 4.9345, 4.9355, 4.9367, 4.9385, 4.9395, 4.9432,
     L  4.9481, 4.9546, 4.9584, 4.9698, 4.9800, 5.0000, 5.0300, 5.1000,
     M  5.1200, 5.1800, 5.2000, 5.2300, 5.2800, 5.3000, 5.3300, 5.3350,
     N  5.3400, 5.3600, 5.3620, 5.3710, 5.3780, 5.3900, 5.4000, 5.4100,
     O  5.4200, 5.4400, 5.4600, 5.5000, 5.5500, 5.5530, 5.6000, 5.6500,
     P  5.7,    5.8000, 5.9000, 6.0000, 6.0500, 6.1250, 6.1600, 6.1800,
```

```
Q  6.2000, 6.2100, 6.2200, 6.2300, 6.2400, 6.2500, 6.2850, 6.2950,
R  6.3030, 6.3100, 6.3200, 6.3300, 6.3400, 6.3500, 6.3600, 6.3700,
S  6.3900, 6.4000, 6.4100, 6.4200, 6.4300, 6.4400, 6.4500, 6.4700,
T  6.4900, 6.5100, 6.5400, 6.5600, 6.5700, 6.5800, 6.5900, 6.6000,
U  6.6200, 6.6400, 6.6575, 6.6650, 6.6800, 6.7000, 6.7500, 6.8100,
V  6.9200, 7.0000, 7.1000, 7.1400, 7.1800, 7.2000, 7.2200, 7.2250,
W  7.2500, 7.2700, 7.3400, 7.3500, 7.3700, 7.4000, 7.4200, 7.4700,
X  7.5417, 7.5937, 7.6200, 7.6500, 7.6674, 7.6800, 7.7000, 7.7250,
Y  7.7450, 7.7500, 7.7700, 7.7887, 7.8100, 7.8191, 7.8600, 7.8884,
Z  7.8971, 7.9300, 8.0000, 8.0440, 8.0800, 8.1000, 8.1050, 8.120/
 Data (E(I), I=378,521)/
A  8.1380, 8.1660, 8.2000, 8.2100, 8.2400, 8.2800, 8.2960, 8.3200,
B  8.3300, 8.4000, 8.4260, 8.4500, 8.5000, 8.5200, 8.6000, 8.6641,
C  8.7000, 8.7681, 8.8000, 8.8500, 8.9198, 8.9400, 8.9800, 9.0000,
D  9.005,  9.0200, 9.0300, 9.0450, 9.0800, 9.1490, 9.1625, 9.1800,
E  9.2189, 9.2500, 9.2535, 9.3000, 9.3600, 9.4500, 9.5000, 9.5220,
F  9.5600, 9.5900, 9.63,   9.6400, 9.6800, 9.6920, 9.7000, 9.7259,
G  9.7400, 9.7500, 9.8000, 9.8299, 9.9000, 9.9209, 10.000, 10.050,
H  10.170, 10.250, 10.300, 10.372, 10.400, 10.500, 10.550, 10.620,
I  10.690, 10.830, 10.940, 11.000, 11.053, 11.100, 11.170, 11.250,
J  11.400, 11.500, 11.700, 11.800, 11.900, 11.917, 12.000, 12.050,
K  12.100, 12.224, 12.250, 12.300, 12.400, 12.500, 12.599, 12.70,
L  12.990, 13.000, 13.100, 13.12,  13.250, 13.300, 13.540, 13.587,
M  13.700, 13.822, 13.830, 13.965, 14.000, 14.182, 14.250, 14.419,
N  14.500, 14.566, 14.694, 14.750, 14.767, 14.812, 14.837, 14.863,
O  14.888, 14.927, 14.962, 15.000, 15.045, 15.093, 15.250, 15.477,
P  15.731, 15.970, 16.000, 16.068, 16.256, 16.440, 16.695, 16.820,
Q  16.974, 17.138, 17.300, 17.467, 17.687, 17.900, 18.087, 18.273,
R  18.632, 18.833, 19.030, 19.185, 19.346, 19.511, 19.660, 20.00/
 Data (Sig(I),I=1,173)/4.7392,4.7392,4.7391,4.7346,4.7161, 4.6991,
X  4.6821, 4.6653, 4.5989, 4.5662, 4.4862, 4.4084, 4.3326, 4.0491,
A  3.7937, 3.5626, 3.3527, 3.1615, 2.9868, 2.7888, 2.5774, 2.4503,
B  2.3331, 2.2249, 2.1250, 2.0328, 1.9479, 1.8698, 1.7981, 1.7321,
C  1.6704, 1.6591, 1.6849, 1.6951, 1.7089, 1.7278, 1.7542, 1.7918,
X  1.8165, 1.8467, 1.8836, 1.9294, 1.9868, 2.0595, 2.1525, 2.2736,
X  2.4328, 2.6449, 2.9297, 3.3122, 3.8176, 4.4511, 5.1565, 5.7664,
X  6.0435, 5.8719, 5.3728, 4.7654, 4.1989, 3.7282, 3.3559, 3.0658,
X  2.8399, 2.6626, 2.5218, 2.4085, 2.3166, 2.2407, 2.1776, 2.1245,
X  2.0794, 2.0407, 2.0073, 1.9783, 1.9303, 1.8926, 1.8624, 1.8376,
A  1.8170, 1.7996, 1.7848, 1.7609, 1.7424, 1.7347, 1.6863, 1.6611,
B  1.6445, 1.6320, 1.6136, 1.6004, 1.5911, 1.5853, 1.5829, 1.5843,
C  1.5899, 1.6008, 1.6165, 1.6390, 1.6709, 1.6905, 1.7132, 1.7396,
X  1.7702, 1.8059, 1.8478, 1.8979, 1.9270, 1.9607, 1.9786, 1.9903,
P  2.0070, 2.0389, 2.0718, 2.1400, 2.3280, 3.1605, 5.0709, 2.7762,
Q  2.2895, 2.1589, 2.1090, 2.0863, 2.0697, 2.0673, 2.0702, 2.0825,
R  2.1029, 2.1265, 2.1795, 2.2425, 2.2774, 2.3149, 2.3555, 2.3994,
S  2.4470, 2.4987, 2.5548, 2.6157, 2.6818, 2.7532, 2.8296, 2.9103,
T  3.0432, 3.1067, 3.1633, 3.2070, 3.2297, 3.2212, 3.1707, 3.0686,
U  2.9106, 2.7013, 2.4557, 2.1960, 1.9458, 1.7235, 1.5395, 1.3962,
V  1.2908, 1.2176, 1.1704, 1.1295, 1.1503, 1.1976, 1.2547, 1.3725,
```

```
      W  1.4825, 1.5826, 1.6744, 1.76,   1.8404, 1.9171, 1.9904/
       Data (Sig(I),I=174,377)/
      X  2.0609, 2.1936, 2.3132, 2.3678, 2.4183, 2.4644, 2.5058, 2.5420,
      X  2.5729, 2.5984, 2.6182, 2.6324, 2.6410, 2.6442, 2.6422, 2.6353,
      Y  2.6238, 2.6081, 2.5654, 2.5393, 2.5105, 2.4795, 2.4120, 2.3394,
      Z  2.3019, 2.2257, 2.0736, 2.0367, 1.9657, 1.9319, 1.9004,
      a  1.8711, 1.8456, 1.8255, 1.8126, 1.8098,
      b  1.8103, 1.8145, 1.8233, 1.8372, 1.8572, 1.8839, 1.9175, 1.9579,
      c  2.0043, 2.1066, 2.1559, 2.1988, 2.2319, 2.2528, 2.2609, 2.2568,
      d  2.2422, 2.2195, 2.1909, 2.1240, 2.0534, 1.9854, 1.9226, 1.8933,
      e  1.8390, 1.7899, 1.7454, 1.7049, 1.6677, 1.6015, 1.5717, 1.5175,
      f  1.4688, 1.4245, 1.4036, 1.3639, 1.3078, 1.2877, 1.2600, 1.2230,
      g  1.2387, 1.3107, 1.3415, 1.7193, 1.9671, 1.9407, 1.7372, 1.4172,
      L  1.2776, 1.2301, 1.2072, 1.1818, 1.1720, 1.1583, 1.1448, 1.1201,
      M  1.1125, 1.0746, 1.0580, 1.0350,0.99397,0.97397,0.96297,0.97447,
      N  1.0360, 1.5038, 1.5516, 1.7101, 1.5508, 1.3542, 1.2424, 1.1506,
      O  1.1088, 1.0483, 1.0158,0.99097,0.98096,0.98012, 0.971, 0.94796,
      P 0.92596,0.90196,0.89546,0.88695,0.88595,0.89595,0.91222,0.94508,
      Q  1.0129, 1.0430, 1.0830, 1.1529, 1.2430, 1.4230, 2.1414, 2.2325,
      R  2.1251, 1.8340, 1.5599, 1.3796, 1.2490, 1.1593, 1.0766, 1.0023,
      S 0.91364, 0.8635, 0.8280, 0.8120,0.82164, 0.8280, 0.8390, 0.8535,
      T 0.83905, 0.7746,0.63544, 0.5551, 0.5216,0.50227,0.49794, 0.5236,
      U 0.60744,0.68294,0.71994,0.71294,0.67155, 0.6448, 0.6387, 0.6270,
      V  0.5963, 0.5696,0.56836, 0.5822, 0.6180,0.64442, 0.6829, 0.6913,
      W  0.7734, 0.8646, 1.3667, 1.4166, 1.4483, 1.4353, 1.4247, 1.4085,
      X  1.4056, 1.3920, 1.3775, 1.3966, 1.4427, 1.4692, 1.5413, 1.7184,
      Y  1.9003, 1.9170, 1.7906, 1.6925, 1.5909, 1.5687, 1.4917, 1.4642,
      Z  1.4517, 1.4123, 1.3597, 1.2955, 1.27765,1.2459, 1.2464, 1.223/
       Data (Sig(I),I=378,541)/
      A 1.16900,1.09276,0.99394,0.95854,0.88064,0.82764,0.81564,0.79411,
      B 0.78703,0.77581,0.7821, 0.77684,0.77778,0.7679, 0.75438,0.74355,
      C 0.7327, 0.72074,0.70652,0.68353,0.65027,0.63938,0.63623,0.64866,
      D 0.64878,0.68113,0.68937,0.67623,0.66755,0.70213,0.71266,0.72048,
      E 0.69418,0.69261,0.69549,0.75252,0.7096, 0.67788,0.6738, 0.66661,
      F 0.6542, 0.66894,0.63361,0.63353,0.68819,0.69409,0.69591,0.66616,
      G 0.64781,0.64182,0.64082,0.63852,0.62361,0.61916,0.62124,0.61361,
      H 0.56131,0.55811,0.57448,0.61246,0.62573,0.67312,0.68875,0.75263,
      I 0.78372,0.82552,0.88923,0.85707,0.88929,0.91773,0.85653,0.86087,
      J 0.893,  0.89375,0.85125,0.86114,0.90718,0.91882,0.9785, 1.0188,
      K 1.01411,0.91976,0.89953,0.87388,0.8526, 0.84632,0.85985,0.87126,
      L 0.91038,0.9069, 0.873,  0.86616,0.8512, 0.8448, 0.86513,0.84551,
      M 0.79844,0.80251,0.80274,0.80207,0.79686,0.78104,0.78273,0.78597,
      N 0.7946, 0.80265,0.83275,0.8548, 0.85801,0.88437,0.91573,0.92163,
      O 0.90352,0.87374,0.88093,0.89,   0.89651,0.90612,0.9129, 0.934,
      P 0.94242,0.9473, 0.9483, 0.9514, 0.9448, 0.93634,0.92169,0.9023,
      Q 0.8771, 0.8562, 0.8483, 0.8527, 0.8711, 0.8894, 0.9005, 0.9073,
      R 0.9144, 0.921,  0.9339, 0.952,  0.9823, 1.0076, 1.0103, 1.0055,
c  (Next 3 rows for E(neutron) > 20 MeV, as given in next data
c   statement.)
      S 0.9475, 0.930,  0.9205, 0.913,  0.885,  0.91,   0.938,  0.964,
```

```
     T 0.884,  0.830,  0.780,  0.730,  0.65,   0.605,  0.545,  0.5,
     U 0.46,   0.389,  0.325,  0.214/
      Data (E(I), I=522,541)/
     S 20.8,   22.0,   24.0,   26.0,   28.6,   29.0,   29.25,  29.59,
     T 30.0,   35.0,   40.0,   45.0,   50.0,   55.0,   60.0,   65.0,
     U 70.0,   80.0,   90.0,  110.0/
c
      Enn=En
      Sigma=EXTERP(E,Sig,Enn,NN,1)
      IF (Enn .LE. E(10)) Sigma=EXTERP(E,Sig,Enn,NN,4)
      Sigcelas=Sigma
      Return
      END
```

```
C   This is file SIGCINEL.FOR
c
c     Purpose is to return a cross section (in barns) for inelastic
c       scattering to the 4.4-MeV level in 12-C by an incident neutron
c       of energy En (in MeV).  Data for En < 15 MeV from ENDF/B-V
c       evaluation.
c For E(neutron) = 20.8, 22.0, 24.0 and 26.0 MeV see Phys. Med.
c  Biol. 29 (1984) 643 for measurements; for En > 26 MeV see same
c  reference for nuclear model predictions.
      FUNCTION SIGCINEL(En)
      Dimension E(122),Sig(122)
      Data NN/122/, Nterp/1/
      Data E/ 4.812, 4.850, 4.900, 4.920, 4.930, 4.940, 4.9500, 4.9800,
     X  5.0000, 5.0300, 5.1000, 5.1200, 5.1500, 5.1800, 5.2000, 5.2300,
     X  5.2800, 5.3600, 5.3700, 5.3800, 5.4300, 5.5000, 5.5500, 5.6000,
     X  5.6500, 5.9000, 6.0500, 6.2000, 6.2500, 6.3200, 6.3400, 6.3500,
     X  6.3600, 6.3900, 6.4100, 6.4300, 6.4500, 6.5400, 6.5600, 6.6200,
     X  6.6400, 6.6700, 6.7500, 6.8100, 6.9200, 7.1400, 7.1800, 7.2200,
     X  7.2500, 7.3600, 7.4200, 7.4700, 7.5417, 7.5937, 7.6674, 7.7887,
     X  7.8191, 7.8884, 7.9361, 8.0000, 8.0140, 8.0440, 8.1000, 8.1380,
     X  8.1660, 8.2000, 8.2400, 8.3200, 8.4260, 8.5000, 8.7500, 8.8330,
     Y  9.0000, 9.0450, 9.1490, 9.2500, 9.5000, 9.6920, 9.7500, 10.000,
     Z  10.250, 10.500, 10.690, 10.750, 10.830, 11.000, 11.250, 11.500,
     A  11.750, 11.909, 12.000, 12.224, 12.599, 13.000, 13.250, 13.500,
     B  13.748, 14.000, 14.500, 14.750, 14.807, 14.863, 14.909, 14.954,
     C  16.443, 18.6,   19.5,   20.000, 20.8,   22.0,   24.0,   26.0,
     D  30.0,   35.0,   40.0,   45.0,   50.0,   60.0,   65.0,   70.000,
     E  80.0,   110.0/
      Data Sig/ 0.0, 0.008, 0.022, 0.028, 0.032, 0.035, 0.037, 0.047,
     X 0.048,  0.047,  0.038,  0.036,  0.040,  0.045,  0.052,  0.066,
     X 0.092,  0.148,  0.150,  0.149,  0.133,  0.124,  0.124,  0.124,
     X 0.1370, 0.1970, 0.2360, 0.2520, 0.2770, 0.340,  0.3510, 0.3490,
     X 0.340,  0.2880, 0.2650, 0.2550, 0.2520, 0.2720, 0.2640, 0.200,
     X 0.1870, 0.1750, 0.1620, 0.1560, 0.1560, 0.1670, 0.1750, 0.1920,
     X 0.2120, 0.310,  0.3510, 0.3480, 0.32156,0.30943,0.31376,0.3857,
     X 0.38917,0.35883,0.3597, 0.3770, 0.400,  0.450,  0.490,  0.460,
     X 0.430,  0.400,  0.390,  0.3450, 0.2660, 0.2450, 0.260,  0.2650,
     A 0.280,  0.310,  0.3140, 0.290,  0.280,  0.3220, 0.350,  0.3250,
     B 0.3150, 0.310,  0.330,  0.3450, 0.3650, 0.360,  0.3350, 0.270,
     C 0.260,  0.250,  0.2390, 0.2270, 0.2140, 0.210,  0.2050, 0.2030,
     D 0.1950 ,0.190,  0.170,  0.1650, 0.190,  0.2150, 0.1983, 0.1817,
     E 0.1630, 0.126,  0.1192, 0.1305, 0.102,  0.093,  0.079,  0.07,
     F 0.0577, 0.0475, 0.0397, 0.0331, 0.0275, 0.0195, 0.0166, 0.015,
     G 0.0126, 0.01/
      Enn=En
      Sigma=EXTERP(E,Sig,Enn,NN,Nterp)
      Sigcinel=Sigma
      Return
      END
```

```
C    This is file SIGCN2N.FOR
c
c      Purpose is to return a cross-section value (in barns) for the reaction
c       n + 12-C --> n + n + 11-C  for an incident neutron having energy
c       En (MeV).  Data for En to 34 MeV from Zeit. fur Physik A301 (1981)
c       353. See also Phys. Rev. 73 (1947) 262; ibid 265.
c
c 4/87. Add in "cross sections" to account for added capability of
c  the N2N routine to compute some (n,2np) reactions.  Threshold for
c  the 12-C(n,2np)10-B reaction is about 34.5 MeV.
      FUNCTION SIGCN2N(En)
      Dimension E(21),Sig(21)
      Data NN/21/, Nterp/1/
      Data E/  20.3,   22.0,  22.8,  23.9,  25.0,  26.0,  26.7,  28.0,
     U  30.0,  32.0,   36.3,  37.5,  40.0,  42.0,  45.0,  50.0,  56.0,
     W  60.0,  75.0,   90.0, 110.0/
      Data Sig/ 0.0,  0.002, 0.003,0.0063,0.0114,0.0139,0.0163,0.0207,
     W0.0235,0.0256,  0.028, 0.029,0.0313,0.0323, 0.033,0.0333,0.0325,
     X0.0316,0.0283,  0.022, 0.0145/
      Enn=En
      Sigma=EXTERP(E,Sig,Enn,NN,Nterp)
      Sigcn2n=Sigma
      Return
      END
c
C   This is file SIGCN3HE.FOR
c
c Purpose to return a cross section (in barns) for  n + 12-C -->
c    3-He + 10-Be  reactions.  Data for En = 39.7 and 60.7 MeV
c    extracted from 3-He spectra published in Phys. Rev. C28, 521
c    (1983).  Data at En = 90 MeV for all 3-He reactions yield a
c    cross section of about 6 mb.
      FUNCTION SIGCN3HE(En)
      Dimension E(22), Sig(22)
      Data E/22.0, 24.0, 26.0, 28.0, 30.0, 32.0, 33.5, 39.7, 42.5, 45.0,
     x 47.0, 49.0, 51.0, 53.0,  55.0,  57.5,  60.7, 65.0, 70.0, 76.0,
     y 90.0, 110.0/
c Next array -- cross sections in mb, not barns.
      Data Sig/0.0, 0.5, 1.2,  2.4,  3.3,  4.6,  5.8,  10.9, 12.7, 14.0,
     x 14.8, 15.5, 15.9, 16.15, 16.25, 16.25, 16.0, 15.3, 14.0, 11.7,
     y 6.0, 2.5/
      Data N/22/,Nterp/1/
      Enn=En
      S=EXTERP(E,Sig, Enn, N,Nterp)
      Sigcn3He=0.001*S
      Return
      END
```

```
C   This is file SIGCNAL.FOR
c
c     Purpose is to return a cross-section value (in barns) for the reaction
c      n + 12-C --> alpha + 9-Be (ground state)  by an incident neutron
c      of energy En (MeV).
c
      FUNCTION SIGCNAL(En)
      Dimension E(45),Sig(45)
      Data NN/ 45/, Nterp/1/
      Data E/ 6.186, 6.340, 7.180, 7.280, 7.340, 7.400, 7.5287, 7.6977,
     X  7.8971, 8.0054, 8.1008, 8.2958, 8.4995, 8.6641, 8.7681, 8.9198,
     X  9.1625, 9.2189, 9.2535, 9.3099, 9.7259, 9.8212, 9.9209, 10.372,
     X  11.004, 11.4,   12.5,   13.5,   14.5,   15.0,   17.0,   19.0,
     Y  22.0,   23.0,   24.0,   27.0,   30.0,   32.5,   40.0,   50.,
     Z  55.0,   60.0,   70.0,   90.0,  110.0/
      Data Sig/ 0.0, 1.0E-05, 0.001,0.006,0.011, 0.018,0.04391,0.09476,
     X  0.1589, 0.171,  0.1589, 0.0965, 0.05952,0.05952,0.07338,0.135,
     X  0.248,  0.293,  0.299,  0.286,  0.186,  0.178,  0.189,  0.1306,
     X  0.08263,0.0785, 0.074,  0.0716, 0.066,  0.062,  0.0392, 0.026,
     Y  0.0175, 0.0155, 0.0142, 0.0112, 0.0095, 0.0084, 0.00605,0.004,
     Z  0.0034, 0.0029, 0.00215,0.0019, 0.0017/
c
      Enn=En
      IF (Enn .LT. E(3)) goto 2
      Sigma = EXTERP(E,Sig,Enn,NN,Nterp)
      Sigcnal=Sigma
      Return
    2 Sigma = EXTERP(E,Sig,Enn,NN,2)
      Sigcnal=Sigma
      Return
      END
```

```
C   This is file SIGCND.FOR
c
c      Purpose is to return a cross-section value (in barns) for the reaction
c n + 12-C --> d + 11-B for an incident neutron energy En (in MeV).
c This reaction can occur for neutrons having energies too small for the
c n + 12-C --> n + p + 11-B reaction; the ENDF/B-V evaluation gives
c cross sections up to 20 MeV based on indirect evidence (it appears).
c
c  Also tried to fit energy distributions at 27.4, 39.7, and 60.7 MeV
c  of Subramanian et al. Phys. Rev. C28, 521 (1983).  The fits are
c  quite reasonable.
c
      FUNCTION SIGCND(En)
      Dimension E(21),Sig(21)
      Data NN/21/
      Data E/15.25, 15.48, 15.97, 16.44, 16.97, 17.9,  18.46, 18.75,
     P       19.0,  19.51, 20.0,  21.0,  23.0,  26.5,  33.5,
     Q       42.7,  53.0,  61.0,  70.0,  90.0, 110.0/
      Data Sig/0.0, 0.002, 0.02,  0.03,  0.04,  0.06,   0.07, 0.071,
     P       0.068, 0.06,  0.053, 0.0505,0.049, 0.0485, 0.047,
     Q       0.0449,0.042, 0.0395,0.0356,0.025, 0.016/
c
      Enn=En
      Sigma=EXTERP(E,Sig,Enn,NN,1)
      Sigcnd=Sigma
      Return
      End
```

```
C   This is file SIGCNN3A.FOR
c     Purpose is to return a cross section (in barns) for the reaction
c      n + 12-C --> n + n + 3 alphas for incident neutron of energy
c      En (in MeV).  For En < 13 MeV the sum of partial (n,n') cross
c      sections are being used.
c     It appears that values for 11 to 35 MeV gotton from Nuclear
c      Physics A394 (1983) 87 are too large, especially for En > 17 MeV.
c
      FUNCTION SIGCNN3A(En)
      Dimension E(31),Sig(31)
      Data NN/31/, Nterp/1/
      Data E/  8.4,  8.7,   9.0,   9.5,   10.0,  10.5,  11.0,  12.0,
     W 13.0,  13.5,  14.0,  14.5,  15.0,  16.0,  17.0,  18.0,  20.0,
     Y 23.0,  25.0,  27.0,  29.0,  31.0,  35.0,  40.0,  45.0,  50.0,
     Z 55.0,  60.0,  70.0,  90.0, 110.0/
      Data Sig/0.0,  0.006, 0.013, 0.035, 0.05,  0.061, 0.09,  0.15,
     W 0.205, 0.235, 0.265, 0.292, 0.306, 0.314, 0.308, 0.292, 0.258,
     X 0.21,  0.179, 0.152, 0.134, 0.117, 0.094, 0.073, 0.06,  0.048,
     Z 0.04,  0.034, 0.0267,0.019, 0.012/
c
      Enn=En
      IF (Enn .LT. E(4)) goto 2
      Sigma=EXTERP(E,Sig,Enn,NN,Nterp)
      Sigcnn3a=Sigma
      Return
    2 Sigcnn3a=EXTERP(E,Sig,Enn,NN,2)
      Return
      END
```

```
C   This is file SIGCNP.FOR
c
c      Purpose is to return a cross-section value (in barns) for the reaction
c       n + 12-C --> p + 12-B (the particle stable levels only) for incident
c       neutron of energy En (MeV).
c
c Cross sections between 15 and 20 MeV are essentially ENDF/B-V values
c  which, in turn, were taken from Rimmer and Fisher, Nuclear Physics
c  A108 (1968) 567.  Values at 27.4, 39.7, and 60.7 MeV adjusted
c  to satisfy spectral data of Subramanian et al. Physical Review C28,
c  521 (1983).  These adjustments took into consideration protons
c  generated in the other subroutines.
c
      FUNCTION SIGCNP(En)
      Dimension E(27),Sig(27)
      Data NN/27/
      Data E/13.665, 14.0,   14.5,   15.0, 15.477, 15.966, 16.443,
     Y  16.974,17.467,17.901,18.46,  19.034, 19.522, 20.0, 21.0,
     Z  22.0,  23.0,  25.0,  27.0,   28.4,   30.0,  34.8,  40.0,
     A  45.0,  55.0,  74.0, 110.0/
      Data Sig/0.0, 0.00014, 0.0004, 0.001,  0.004, 0.008, 0.011,
     Y  0.013, 0.016, 0.019, 0.019,  0.018,  0.015, 0.013, 0.0088,
     Z  0.0088,0.01,  0.0121,0.0133, 0.0135, 0.0133,0.012, 0.0108,
     A  0.0098,0.0085,0.0068,0.005/
c
      Enn=En
      Sigma=EXTERP(E,Sig,Enn,NN,3)
      Sigcnp=Sigma
      Return
      END
```

```
C    This is file SIGCNPN.FOR
c
c      Purpose is to return a cross-section value (in barns) for the generic
c  reaction n + 12-C --> p + n + 11-B for incident neutrons having
c  energy En (in MeV).  It includes reactions in the program
c  following breakup of the 11-B when energetically available.
c  It also includes other reactions following breakup of 12-B when
c  energetically available, e.g.  n + 12-C --> p + p + 11-Be.
c        Datum at 90 MeV derived from Kellogg, Phys. Rev. 90, 224 (1953).
      FUNCTION SIGCNPN(En)
      Dimension E(28),Sig(28)
      Data NN/28/, Nterp/1/
      Data E/ 17.35, 18.0,  18.7,  19.3,  20.0,  21.0,  22.0, 23.0,
     W 24.5,  26.0,  28.0,  30.0,  33.0,  36.0,  40.0,  42.0, 45.0,
     X 47.0,  50.0,  53.0,  58.0,  65.0,  70.0,  80.0,  85.0, 90.0,
     Y 100.0, 110.0/
      Data Sig/ 0.0, 0.005, 0.009, 0.012, 0.016, 0.02,  0.0235,0.0275,
     W 0.0355, 0.04, 0.0465,0.05,  0.0545,0.0575,0.06,  0.0615,0.0625,
     X 0.0627,0.0625,0.062, 0.062, 0.0635,0.065, 0.074, 0.083, 0.095,
     Y 0.117, 0.141/
      Enn=En
      Sigma=EXTERP(E,Sig,Enn,NN,Nterp)
      Sigcnpn=Sigma
      Return
      END
c
C   This is file SIGCNT.FOR
c
      FUNCTION SIGCNT(En)
      Dimension  E(12),Sig(12)
c Purpose to return cross section for (N,T) reaction.  Data values
c  for En = 27.4, 39.7, and 60.7 MeV deduced from graphs shown for
c  double differential cross sections in paper of Subramanian, et al,
c  Physical Review C28, 521 (1983).  Datum at 90 MeV from Kellogg's
c  paper, Phys. Rev. 90, 224 (1953) which includes all reactions
c  resulting in a triton.  And there are quite a few of them.
      Data E/ 21.5,22.5,25.0,27.4,30.0, 39.7, 45., 50., 54., 60.7, 90.0,
     k  110.0/
      Data Sig/0.0, 1.0, 3.8, 7.1,10.5, 23.3, 28.5,30.7,31.3,30.5, 22.0,
     k  13.0/
c Sig values are in millibarns, not barns as in the other functions.
      Data Ndata/12/, Nterp/1/
      Enn=En
      Sigma=EXTERP(E, Sig, Enn, Ndata, Nterp)
      Sigcnt=0.001*Sigma
      Return
      END
```

```
C     This is file SIGHYD.FOR
c       Purpose is to obtain cross-section value (in barns) for n+p scattering
c       by neutron of energy En in MeV.
      FUNCTION SIGHYD(En)
      Dimension Ep(41),Sp(41)
      Data Ep/1.0E-10,1.5E-10,2.0E-10,2.5E-10,3.E-10,4.E-10,5.E-10,
     A  6.E-10,8.E-10,1.0E-9,1.5E-9,2.0E-9,2.5E-9,3.E-9,4.E-9,5.E-9,
     B  6.E-9,8.E-9,1.0E-8,1.5E-8,2.0E-8,2.5E-8,3.E-8,4.E-8,5.E-8,
     C  6.E-8,8.E-8,1.0E-7,1.5E-7,2.0E-7,2.5E-7,3.E-7,4.E-7,5.E-7,
     D  6.E-7,8.E-7,1.0E-6,1.5E-6,2.0E-6,2.5E-6,2.8E-6/
      Data Sp/  67.48,  50.58,  41.63,  35.67, 32.60, 26.04, 22.57,
     A  20.09, 16.82, 14.74, 11.67, 10.09, 8.897, 8.106, 7.018,6.326,
     B  5.883,5.242, 4.838, 4.208, 3.813, 3.547, 3.37, 3.124, 2.977,
     C  2.839,2.592, 2.608, 2.476, 2.388, 2.340, 2.301, 2.232, 2.193,
     D  2.168,2.134, 2.049, 2.046, 2.041, 2.037, 2.034/
      Data NN/41/
      Data Pi/3.14159265/
c
      E=En
      S=20.34
      IF (En - Ep(NN)) 1,3,2
    1 S=10.*EXTERP(Ep,Sp,En,Nn,4)
      Goto 3
    2 A=(-1.86+0.09415*E+0.000136*E*E)**2
      B=(0.4223+0.13*E)**2
      C=1.206*E
      S=3.*Pi/(C+A) + Pi/(C+B)
    3 Sighyd=S
      Return
      End
```

```
c   This is file TENBDK.FOR
c
c Purpose is to follow the decay of particle-unstable excited
c   states of 10-B.  This routine is used in Subroutines ND, NT,
c   and NPX.
c
c Choices of decay modes are:
c   (a) 10-B --> p + 9-Be (ground state)
c or,
c   (a')  10-B --> d + 8-Be
c   (b')   8-Be--> alpha + alpha
c or,
c   (a")  10-B --> alpha + 6-Li
c   (b")   6-Li--> gamma + 6-Li (ground state)
c or,
c   (b")   6-Li--> d + alpha
c or, under certain circumstances,
c   (a3)  10-B --> p + 9-Be (excited)
c   (b3)   9-Be--> n + 8-Be
c   (c3)   8-Be--> alpha + alpha
c or, fractionally,
c   (b3')  9-Be--> d + 7-Li
c
      Subroutine TENBDK(Excit,V10B,Eg)
c
      Real*4 Li6pa
      Common /COLLIS/ Nelm,Echrg(6)
      Common /MASSES/ Emass(19)
      Common /RANDM/  Irx
      Common /NAID/   Rad,Ht,R1,R2
      Common /VECTOR/ Xpn,Ypn,Zpn, Xn,Yn,Zn
c    At entry to this routine Xn,Yn,Zn are direction cosines of
c    moving 10-B ion in "detector" lab. coordinates.
      Common /NEUTRN/ Eneut, Dc1,Dc2,Dc3, Xneut,Yneut,Zneut
      Common /PROTON/ Noprot,Range(75),Proten(75)
      Common /EXC6LI/ ExLi6(6),He4pd
      Common /BENINE/ Ex9Be(6),Be8pn
c    See Subroutine N3He for values in BENINE common.
c
c   Next array represents level structure of 6-Li.
      Data ExLi6/0.0,2.185, 3.563, 4.31, 5.37, 5.65/
c
      Data Kp/2/, K6Li/18/, Kd/10/, Ka/3/, K9Be/4/, Kn/1/, K8Be/8/
      Data Qnt/18.93/, Be8pd/6.026/, Be9pp/6.585/, Be8aa/0.092/
      Data He4pd/1.474/, Li6pa/4.46/, Ntrp/1/
c
      Eg=0.0
      Ta=Excit
c Choose which decay mode to follow.
      IF (Excit .LE. Be8pd) goto 10
```

```
      IF (Excit .LE. Be9pp) goto 5
c Such experimental information as exists suggests that about half
c   of the highly-excited levels in 10-B decay predominantly by
c   proton emission.
      IF (RAN(Irx) .GE. 0.5) goto 5
c
c   Study p + 9-Be mode first.
      Taex=Ta-Be9pp
      Try=Taex
      Ep=RCKE(Kp,K9Be,Taex)
      Npgo=-1
      Excit=0.0
      IF (RAN(Irx) .LE. 0.04) goto 4
c Last is to slightly enhance 9-Be ground state -- 4c
c Next test variable -ENEUT-; if it's zero then can set up for
c   possible 9-Be --> n + 8-Be calculation.
      IF (Eneut .GT. 0.0) goto 4
c -ENEUT- is zero, so look for decay mode (a3), above.
      Ehat=Ep+5.0
      F=0.1245 + 0.001*ABS(Ehat-45.0)
      T=F*Ehat
      Eprot=CHOOSP(Ep,T)
      Try=Eprot*(Emass(Kp) + Emass(K9Be))/Emass(K9Be)
      Eptry=RCKE(Kp,K9Be,Try)
      Try=Try*Eprot/Eptry
      Excit=Taex-Try
c    (No test for 9-Be --> p + 8-Li as already have one proton's info.)
c Next check possible  9-Be --> d + 7-Li decay mode.
      Rani=RAN(Irx)
      IF (Excit .LT. 17.4 .OR. Rani .GT. 0.09) goto 2
      Npgo=1
      Goto 9
    2 Npgo=0
      IF (Excit .GE. 16.0) goto 9
      K=1
      Do 6 I=2,6
      IF (Excit .LT. Ex9Be(I)) goto 7
    6 K=K+1
    7 Excit=Ex9Be(K)
c Recheck for 9-Be ground state at this point.
      IF (K .EQ. 1) Npgo=-1
      Try=Taex-Excit
    9 Ep=RCKE(Kp,K9Be,Try)
    4 Vp=VELOCITY(Kp,Ep)
c   "Fission" of 10-B is isotropic in center of mass coords.
      CALL RVECT(Xp,Yp,Zp)
      Vpx=Xp*Vp
      Vpy=Yp*Vp
      Vpz=Zp*Vp
      CALL LABTRAN(Vpx,Vpy,Vpz, V10B, Vx,Vy,Vz)
```

```
      Vpl=SQRT(Vx*Vx + Vy*Vy + Vz*Vz)
      Epl=EFROMV(Kp,Vpl)
      Echrg(5)=Epl
c Check for possible proton escape from detector:
      CALL DIRCOS(Vx,Vy,Vz, Xpn,Ypn,Zpn)
      Za=Xn
      Zb=Yn
      Zc=Zn
      CALL TRANSVEC(Za,Zb,Zc)
      Protpl=PLNGTH(Xn,Yn,Zn, Xneut,Yneut,Zneut, Rad,Ht)
      Rprot=EXTERP(Proten,Range,Epl,Noprot,Ntrp)
      RangeQ=Rprot-Protpl
      IF (RangeQ .LE. 0.0) goto 3
      Echrg(6)=EXTERP(Range,Proten,RangeQ,Noprot,Ntrp)
c Next: Get information for 9-Be ion.
    3 E9Bec=Try-Ep
      V9Bec=VELOCITY(K9Be,E9Bec)
      V9x=-Xp*V9Bec
      V9y=-Yp*V9Bec
      V9z=-Zp*V9Bec
      CALL LABTRAN(V9x,V9y,V9z, V10B, Vx,Vy,Vz)
      V9Be=SQRT(Vx*Vx + Vy*Vy + Vz*Vz)
C
      IF (Npgo .EQ. -1) goto 13
      IF (Npgo .EQ. 1) goto 25
c Program counter to here have 9-Be --> n + 8-Be decay mode
c   First rotate 9-Be ion motion into "detector" coordinates:
      CALL DIRCOS(Vx,Vy,Vz, Xpn,Ypn,Zpn)
      CALL TRANSVEC(Za,Zb,Zc)
c Done.
      Tax=Excit-Be8aa-Be8pn
      Enc=RCKE(Kn,K8Be,Tax)
      Vnc=VELOCITY(Kn,Enc)
      CALL RVECT(Xp,Yp,Zp)
      Vnx=Xp*Vnc
      Vny=Yp*Vnc
      Vnz=Zp*Vnc
      CALL LABTRAN(Vnx,Vny,Vnz, V9Be, Vx,Vy,Vz)
      Vnlab=SQRT(Vx*Vx + Vy*Vy + Vz*Vz)
      Enn=EFROMV(Kn,Vnlab)
c That's the neutron's energy.  Store it in /NEUTRN/ common area.
      Eneut=Enn
c Rotate neutron's motion into "detector" coordinates and store them.
      CALL DIRCOS(Vx,Vy,Vz, Xpn,Ypn,Zpn)
      Za=Xn
      Zb=Yn
      Zc=Zn
      CALL TRANSVEC(Za,Zb,Zc)
      Dc1=Xn
      Dc2=Yn
```

```
      Dc3=Zn
c Now get 8-Be ion motion.
      E8Bec=Tax-Enc
      V8Bec=VELOCITY(K8Be,E8Bec)
      V8x=-Xp*V8Bec
      V8y=-Yp*V8Bec
      V8z=-Zp*V8Bec
      CALL LABTRAN(V8x,V8y,V8z, V9Be, Vx,Vy,Vz)
      V8Be=SQRT(Vx*Vx + Vy*Vy + Vz*Vz)
c Done.  Now get  8-Be --> 2 alphas.
      Iechrg=3
      Goto 16
c
c Next it to tidy up  10-B --> p + 9-Be (ground state) decay mode.
   13 Echrg(3)=EFROMV(K9Be,V9Be)
      Return
c END SECTION on p + 9-Be
c
c  Choosing between the other two modes of 10-B decay appears a toss up.
    5 IF (RAN(Irx) .GE. 0.5) goto 10
c Do 10-B --> d + 8-Be decay mode next.  Ignore 8-Be excited states
c    as we are already high in (effective) 12-C excitation, and these
c    branches of decay are relatively minor.
      Taex=Ta-Be8pd
      Ed=RCKE(Kd,K8Be,Taex)
      Vd=VELOCITY(Kd,Ed)
      CALL RVECT(Xd,Yd,Zd)
      Vdx=Xd*Vd
      Vdy=Yd*Vd
      Vdz=Zd*Vd
      CALL LABTRAN(Vdx,Vdy,Vdz, V10B, Vx,Vy,Vz)
      Vdl=SQRT(Vx*Vx + Vy*Vy + Vz*Vz)
      Echrg(3)=EFROMV(Kd,Vdl)
c and as above for the proton, ignore possible deuteron escape from
c the detector.
      E8Bec=Taex-Ed
      V8Bec=VELOCITY(K8Be,E8Bec)
      V8x=-Xd*V8Bec
      V8y=-Yd*V8Bec
      V8z=-Zd*V8Bec
      CALL LABTRAN(V8x,V8y,V8z, V10B, Vx,Vy,Vz)
      V8Be=SQRT(Vx*Vx + Vy*Vy + Vz*Vz)
c Now get 8-Be --> alpha + alpha(2)
      Iechrg=4
   16 Ta=Be8aa
      Ea=0.5*Ta
c     Alphas share the available energy.
      Va=VELOCITY(Ka,Ea)
      CALL RVECT(Xc,Yc,Zc)
      Vax=Xc*Va
```

```
      Vay=Yc*Va
      Vaz=Zc*Va
      CALL LABTRAN(Vax,Vay,Vaz, V8Be, Vx,Vy,Vz)
      Valph=SQRT(Vx*Vx + Vy*Vy + Vz*Vz)
      Echrg(Iechrg)=EFROMV(Ka,Valph)
c   Recall symmetry so that Va2x=-Vax, etc, for the other
c   alpha.
      Va2x=-Vax
      Va2y=-Vay
      Va2z=-Vaz
      CALL LABTRAN(Va2x,Va2y,Va2z, V8Be, Vx,Vy,Vz)
      Valph2=SQRT(Vx*Vx + Vy*Vy + Vz*Vz)
      Echrg(Iechrg+1)=EFROMV(Ka,Valph2)
      Return
c END SECTION for 10-B --> d + 8-Be
c         and for 10-B --> p + n + 8-Be.
c
c  That leaves 10-B --> alpha + 6-Li decay modes to do.
   10 Taex=Ta-Li6pa
      Eax=RCKE(Ka,K6Li,Taex)
      Eg=0.0
      Excita=0.0
      K=1
      IF (RAN(Irx) .LE. 0.03) goto 18
c As done above, a slight (3      Temp=4.0
c   See comments for alpha "continuum" computation just prior to statement
c no. 38 in subroutine NN3ALF.
      Eatry=CHOOSP(Eax,Temp)
      Try=Eatry*(Emass(Ka) + Emass(K6Li))/Emass(K6Li)
      Etry=RCKE(Ka,K6Li,Try)
      Try=Try*Eatry/Etry
      Excita=Taex-Try
c    Now pair -Excita- with a level in 6-Li
      K=7
      IF (Excita .GT. 20.0) goto 18
      K=1
      Do 14 I=2,6
      IF (Excita .LT. ExLi6(I)) goto 15
   14 K=K+1
   15 Excita=ExLi6(K)
c 6-Li level decay scheme is as follows:
c K=1 Ex=0.0 Stable
c K=2 Ex=2.185 d + alpha (very weak gamma)
c K=3 Ex=3.563 ground-state gamma ray
c K=4 Ex=4.31 d + alpha
c K=5 Ex=5.366 weak g.s. gamma reported, but
c  p or n decay most likely.
c K=6 Ex=5.65 d + alpha
c K>6 Ex>20 triton + 3-He
c   For the present programming, take K=3 gamma decay and the remaining
```

```
c       K>1 excited state decay to be d + alpha.
      IF (K .EQ. 3) Eg=Excita
c Now get information on alpha.
   18 Taex=Taex-Excita
      Eaa=RCKE(Ka,K6Li,Taex)
      Vaa=VELOCITY(Ka,Eaa)
      CALL RVECT(Xa,Ya,Za)
      Vax=Xa*Vaa
      Vay=Ya*Vaa
      Vaz=Za*Vaa
      CALL LABTRAN(Vax,Vay,Vaz, V10B, Vx,Vy,Vz)
      Va=SQRT(Vx*Vx + Vy*Vy + Vz*Vz)
      Echrg(4)=EFROMV(Ka,Va)
c Now set up 6-Li ion.
      E6Lic=RCKE(K6Li,Ka,Taex)
      V6Lic=VELOCITY(K6Li,E6Lic)
      V6x=-Xa*V6Lic
      V6y=-Ya*V6Lic
      V6z=-Za*V6Lic
      CALL LABTRAN(V6x,V6y,V6z, V10B, Vx,Vy,Vz)
      V6Li=SQRT(Vx*Vx + Vy*Vy + Vz*Vz)
      IF(K .EQ. 2) goto 20
      IF (K. GE. 4) goto 20
c For K=1 or 3 tidy up 6-Li energy.
      Echrg(3)=EFROMV(K6Li,V6Li)
      Return
c Penultimate section: 6-Li --> d + alpha
   20 CALL ALFAPD(Excita,V6Li)
      Return
c
c Last section:  9-Be --> d + 7-Li  (no deuteron escape considered)
   25 CALL DPLI7(Excit,V9Be)
      Return
c
c   At exit from this subroutine the -Echrg- array will have information on
c decay of 10-B as follows:
c
c   Final decay mode    |   Echrg(3)    |   Echrg(4)    |   Echrg(5)
c    ----------------- | ------------- | ------------- | -------------
c       p + 9-Be        |   E(9-Be)     |     0.0       |    E(p)
c    p + n + 2 alpha    |   E(alpha)    |   E(alpha)    |    E(p)
c     alpha + 6-Li      |   E(6-Li)     |   E(alpha)    |    0.0
c      d + 2 alpha      |    E(d)       |   E(alpha)    |   E(alpha)
c     p + d + 7-Li      |   E(7-Li)     |    -E(d)      |    0.0
c
c   For reactions  p + 9-Be, p + d + 7-Li, and p + n + 2alpha, Echrg(6)
c  will have proton escape information, if any.
c For the other two reactions, Echrg(6) = 0.
      END
```

```
C   This is file TOTALX.FOR
c
c     Purpose is to determine total attenuation cross section (in units of
c      cm**-1) and also the fractional parts of this total due to the separate
c      partial cross sections for incident neutron of energy Eneut.
c
      Function TOTALX(Eneut)
c
      Common /DENS/ Apb(2)
      Common /PROB/ P(12)
      Dimension S(10)
c
      En=Eneut
      S(1)=SIGHYD(En)*Apb(1)
      S(2)=Apb(2)*SIGCELAS(En)
      S(3)=Apb(2)*SIGCINEL(En)
      S(4)=Apb(2)*SIGCNAL(En)
      S(5)=Apb(2)*SIGCNN3A(En)
c       include (n,3-He); 6/87.
      S(6)=Apb(2)*SIGCN3HE(En)
c       change 5/87: amalgamate (n,p) and (n,pn)
      S(7)=Apb(2)*(SIGCNPN(En)+SIGCNP(En))
      S(8)=Apb(2)*SIGCN2N(En)
      S(9)=Apb(2)*SIGCND(En)
      S(10)=Apb(2)*SIGCNT(En)
      Sigt=S(1)
      Do 1 J=2,10
      P(J+2)=1.0
    1 Sigt=Sigt+S(J)
c               Sigt = total "attenuation" cross section desired
c
      P(1)=2.0001
      P(2)=Sigt
      P(3)=S(1)/Sigt
      Do 4 J=2,10
      P(J+2)=P(J+1)+S(J)/Sigt
      IF (P(J+2) .LE. 0.999999) P(1)=P(1)+1.0
    4 Continue
c
      Totalx=Sigt
      Return
      END
```

```
C   This is file TRANSVEC.FOR
c
      Subroutine TRANSVEC(Zx,Zy,Zz)
c
c Given a vector with direction cosines Vxp,Vyp, and Vzp in a
c  coordinate system having its Z-axis direction cosines as
c  Zx, Zy, and Zz in a second coordinate system, determine the
c  directions cosines of the vector in the second coordinate
c  system.  Since the X and Y axes corresponding to the given
c  Z axis are not given, it is assumed that the Y axis lies
c  in the x-y plane of the second coordinate system.  The
c  resulting direction cosines of the vector in the second
c  coordinate system are Vx, Vy, and Vz.
c
      Real*8 D1,Dum1,Dum2
      Common /VECTOR/ Vxp,Vyp,Vzp, Vx,Vy,Vz
      Data D1/1.0D+0/
c
      IF (Zz.GE.1.0) goto 2
      Dum1=Zz
      Dum2=DSQRT(D1-Dum1*Dum1)
      Xz=-Dum2
      IF (Xz .GT. -0.0004) goto 2
      Yx=Zy/Xz
      Yy=-Zx/Xz
      Xx=Yy*Zz
      Xy=-Yx*Zz
c
      Vx=Xx*Vxp + Yx*Vyp + Zx*Vzp
      Vy=Xy*Vxp + Yy*Vyp + Zy*Vzp
      Vz=Xz*Vxp          + Zz*Vzp
      Return
c
    2 Vx=Vxp
      Vy=Vyp
      Vz=Vzp
      Return
      END
```

```
C    This is file VELOCITY.FOR
c
c Purpose is to compute velocity (in cm/sec) for particle of energy E
c (in MeV) relativistically correct.
c
      Function VELOCITY(N,E)
c       N=1  Particle=neutron
c         2     "     =proton
c         3     "     =alpha
c         4     "     =9-Be
c         5     "     =11-B
c         6     "     =12-B
c         7     "     =12-C
c         8     "     =8-Be
c         9     "     =11-C
c        10     "     =deuteron
c        11     "     =5-He
c        12     "     =10-B
c        13     "     =triton
c        14     "     =11-Be
c        15     "     =10-Be
c        16     "     =8-Li
c        17     "     =7-Li
c        18     "     =6-Li
c        19     "     =3-He
c
      Real*8 G,Gsq,B,D1
      Common /MASSES/ Emass(19)
      Data D1/1.0D+0/,C/2.997925E+10/
      Data Emass /939.583,938.8,3728.43,8394.86,10255.2,11191.4,11178.0,
     & 7456.95,10257.17,1876.14,4668.9,9327.05,2809.45,10266.69,9327.62,
     & 7472.96,6535.42,5603.097,2809.44/
      V=0.0
      IF (E .LE. 0.0) goto 2
      IF (N.GE.1 .AND. N.LE.19) goto 1
    2 Type 4, N,E
    4 Format(/'  *** Error in Function VELOCITY; N, E ='I12,1PE10.3/)
      Goto 7
    1 M=N
      Gamma=E/Emass(M)
      G=Gamma
      G=G+D1
      Gsq=G*G
      B=DSQRT(D1-D1/Gsq)
      Beta=B
      V=C*Beta
    7 Velocity=V
      Return
      END
```

7. THE SUBSIDIARY PROGRAM SCINSPEC

The program SCINSPEC was written to reformat and rebin the output from SCINFUL as written into the file NEW.PCH. The program SCINSPEC calls the functions ETOL and EXTERP, both subroutines being listed as part of the SCINFUL program.

SCINSPEC is an interactive program requiring three data in response to prompts. The first is the name of the file containing the SCINFUL output data (usually NEW.PCH). The second and third input data are numbers which set up the output pulse height calibration; the second datum is a channel number, and the third datum is a light-unit value. Then the program sets the pulse-height scale in equal-sized light-unit bins. However, if the third datum is entered as a negative value, the program sets the pulse-height scale in equal-sized (equivalent) proton-energy bins. This latter scale is needed, for example, to compare the present computations as given in the case presented above with the computations performed by Uwamino et al.[12]

As examples of the use and output of SCINSPEC, the program was run twice using the data of the sample case, above. The first run set the pulse height calibration in light units; the printer/monitor input/output was as follows:

```
$ run scinspec
 NEW.PCH filename is: new.pch
 Light-unit calibration: Channel = 100.
   At channel  100. light units are = 10.
  For  0.165 L.U., Integral =  28176.2 counts, Effic =   9.54 +OR-  0.07 percent
  For  4.747 L.U., Integral =  33814.8 counts, Effic =   6.72 +OR-  0.06 percent
  ***   End file  spectrum.dat
FORTRAN STOP
```

Input for this sample case consists of "new.pch", "100.", and "10.". The next two lines are output and consist of the integral yield from zero pulse height to the given light-unit value plus the computed efficiency for a bias set at the given light-unit value. The two light-unit values (of 0.165 and 4.747) are written into the program; in this example they are equivalent to 1/60 and 1/6 of 62-MeV equivalent proton energy so that one may compare the output values directly with the Uwamino

et al. published data.[12] (It would be a simple matter to change the program to input desired light-unit values for efficiency computations from the printer/monitor.) The computed uncertainty is based on the binomial distribution uncertainty which becomes the Poisson uncertainty in the limit of small probabilties.

The printer/monitor input/output for the example of setting the pulse height scale to equivalent and equal-sized proton-energy bins is as follows:

```
$ run scinspec
 NEW.PCH filename is: new.pch
 Light-unit calibration: Channel = 420.
   At channel  420. light units are = -62.
           AH HA -- Counts vs PROTON Energy in this case.
  For  0.165 L.U., Integral =  28176.2 counts, Effic =   9.54 +OR-  0.07 percent
  For  4.747 L.U., Integral =  33814.8 counts, Effic =   6.72 +OR-  0.06 percent
  ***   End file  spectrum.dat
FORTRAN STOP
```

For this example I chose channel 420 to give a spectrum about equal in length to that obtained from the first SCINSPEC example. The spectrum (subsequently truncated to 512 channels) obtained from the first SCINSPEC example is given on the next two pages, and the spectrum obtained from the second SCINSPEC example is given on the following two pages. One may note the differences in the two spectra thus obtained, particularly for the first 80 channels or so, which may be related to the nonlinearity in the light-unit vs proton pulse height functional relationship. The listing of the program SCINSPEC follows the second spectrum.

```
O5S results reformatted
    For En between    0.00 and    62.00 MeV
    Ntotal =     199990
    0    432    431      0      0      0
  0.0  27986    268    185    185    157    172    157    158
  8.0    154    136    150    133    126    143    161    158
 16.0    145    110    115    122    129    120    112    110
 24.0    104    111    111    126    106     86    100     98
 32.0    107    106    103    113    132    102     89     92
 40.0     91     98    104    106     86    112     96    101
 48.0     90    108     76     96    102    103    100    105
 56.0     98    107    112    124    126    115    104    103
 64.0    113     96    113    108    118    116     93     88
 72.0     94    107    105    104     88     97    104     87
 80.0     96     95     98     95     97     99     87     91
 88.0    100     93     94     91    100     89     80     72
 96.0     69     74     75     73     82     70    102     68
104.0     68     65     79     63     56     72     78     73
112.0     54     80     59     51     55     64     52     65
120.0     57     59     59     48     57     54     49     49
128.0     51     51     47     46     40     37     40     56
136.0     52     42     43     45     42     40     39     42
144.0     38     41     35     44     51     42     42     36
152.0     33     32     32     34     34     28     24     27
160.0     26     28     35     39     36     37     37     34
168.0     28     33     28     32     34     32     37     35
176.0     36     35     32     34     34     34     35     36
184.0     32     34     33     31     29     36     34     32
192.0     38     42     43     45     55     48     52     55
200.0     53     55     55     57     69     69     74     79
208.0     45     27     20     25     20     22     23     23
216.0     26     22     17     19     22     22     19     21
224.0     19     17     19     18     19     15     21     23
232.0     20     23     23     23     24     23     24     20
240.0     21     21     22     23     23     28     25     21
248.0     26     27     28     32     32     31     20     23
256.0     25     18     17     16     16     16     19     17
264.0     18     18     18     17     13     16     19     19
272.0     20     19     23     21     16     17     18     20
280.0     22     22     15     14     13     14     13     15
288.0     16     17     16     14     11     17     18     19
296.0     17     14     14     15     15     14     15     22
304.0     20     15     15     16     16     17     16     17
312.0     17     12     12     14     15     15     17     15
320.0     11     11      9     11     12     13     12     11
328.0     12     14      5      5     11     15     18      9
336.0      7     10     11     12     13     13     11      9
344.0     19     16      9      9     10     13     14      8
352.0      9     17     14     12     11     12     10     10
360.0      9      9     13     12     11     12     12     10
```

368.0	9	15	15	13	13	16	13	11
376.0	11	12	13	15	15	15	15	13
384.0	9	11	13	11	8	7	8	9
392.0	11	12	13	12	12	15	14	12
400.0	13	16	15	13	12	12	12	12
408.0	10	8	9	9	12	13	8	8
416.0	0	0	0	0	0	0	0	0
424.0	0	0	0	0	0	0	0	0
432.0	0	0	0	0	0	0	0	0
440.0	0	0	0	0	0	0	0	0
448.0	0	0	0	0	0	0	0	0
456.0	0	0	0	0	0	0	0	0
464.0	0	0	0	0	0	0	0	0
472.0	0	0	0	0	0	0	0	0
480.0	0	0	0	0	0	0	0	0
488.0	0	0	0	0	0	0	0	0
496.0	0	0	0	0	0	0	0	0
504.0	0	0	0	0	0	0	0	0

```
O5S results reformatted
    For En between    0.00 and   62.00 MeV
    Ntotal =     199990
    0    432    431      0      0      0
  0.0  15707   8113   2763    814    540    166     73     88
  8.0     77     79    105     82     83     86     91    103
 16.0     90     88     97     85    105     93     86    105
 24.0     91     96     87    104    112    119    111    105
 32.0     90     77     86     88     91     90     89     88
 40.0     88     74     85     86     90     87    103     84
 48.0     67     77     78     85     85     94     86     85
 56.0    101    109     86     76     78     79     78     90
 64.0     87     93     72     99     90     77     85     85
 72.0     93     67     83     91     91     91     93     94
 80.0     94     90    103    111    116    103    100     88
 88.0    100     94     92    102     96    108    105     93
 96.0     72     83     93     94     96     93     79     89
104.0     95     83     82     91     88     90     87     94
112.0     88     80     87     96     88     90     87     96
120.0     87     78     72     66     71     74     71     77
128.0     74     86     79     67     64     72     68     58
136.0     63     75     76     61     68     69     55     53
144.0     59     59     57     63     58     58     55     47
152.0     60     51     47     50     52     47     48     43
160.0     39     39     46     57     50     40     48     45
168.0     41     41     42     40     42     39     41     55
176.0     44     43     37     35     32     33     36     34
184.0     28     25     29     26     32     38     39     37
192.0     39     37     31     32     32     28     37     33
200.0     38     37     36     37     34     34     35     35
208.0     36     37     34     35     34     31     31     39
216.0     33     35     40     43     45     51     54     50
224.0     56     57     55     57     58     68     71     72
232.0     85     53     33     20     25     21     23     23
240.0     25     26     23     18     20     24     22     21
248.0     22     19     20     19     20     17     21     25
256.0     22     24     25     25     25     25     24     22
264.0     22     24     24     25     29     27     23     28
272.0     29     30     34     34     28     22     27     22
280.0     18     18     17     17     21     18     19     20
288.0     18     17     14     20     21     20     21     24
296.0     23     18     19     20     23     24     22     16
304.0     15     15     15     17     18     19     18     13
312.0     16     20     22     19     15     17     17     17
320.0     16     23     23     17     17     18     19     17
328.0     19     20     13     14     16     17     18     19
336.0     13     12     10     13     14     14     13     13
344.0     15      7      7     12     19     18      7     10
352.0     12     14     14     16     10     16     22     10
360.0     11     11     15     14      9     17     17     13
```

368.0	13	13	12	11	10	14	14	13
376.0	13	13	11	15	18	14	16	17
384.0	13	13	13	15	16	18	17	17
392.0	12	11	15	13	9	9	9	12
400.0	13	15	14	14	17	15	13	18
408.0	18	14	14	14	14	12	10	10
416.0	10	14	13	9	5	0	0	0
424.0	0	0	0	0	0	0	0	0
432.0	0	0	0	0	0	0	0	0
440.0	0	0	0	0	0	0	0	0
448.0	0	0	0	0	0	0	0	0
456.0	0	0	0	0	0	0	0	0
464.0	0	0	0	0	0	0	0	0
472.0	0	0	0	0	0	0	0	0
480.0	0	0	0	0	0	0	0	0
488.0	0	0	0	0	0	0	0	0
496.0	0	0	0	0	0	0	0	0
504.0	0	0	0	0	0	0	0	0

```
c  This is file SCINSPEC.FOR
c    Purpose is to transfer data in an NEW.PCH file to a format
c    that looks like it came from our TN analyzer so that then
c    can use the various plotting packages.  For this purpose
c    need a linear (assumed) calibration of light units versus
c    channel for the output data file -- on unit 39.
c
      Character*80 File1
      Dimension A(500),I5(500),S(500),ID(4096)
      Type 70
   70 Format('  NEW.PCH filename is: '$)
      Accept 71, File1
   71 Format(A)
      OPEN(Unit=20,File=File1,Status='OLD')
      OPEN(Unit=39,File='SPECTRUM.DAT',Status='new')
      Type 72
   72 Format(/'  Light-unit calibration: Channel = '$)
      Accept 73, C
   73 Format(F)
      Type 74, C
   74 Format('    At channel',0PF6.0,' light units are = '$)
      Accept 73, D
      Indx=0
      IF (D.GT.0.0) goto 2
      Indx=1
      Type 75
   75 Format(12x,'AH HA -- Counts vs PROTON Energy in this case.')
      D=-D
    2 Slope=D/C
c
      Read (20,80) N,Ntot,E2,E1,T
   80 Format(2I10,3E10.3)
      Totn=0.01*FLOAT(Ntot)
      Write(39,81)
   81 Format(2x,'O5S results reformatted')
      Write(39,82) E1,E2,Ntot
   82 Format(6x,'For En between '0PF7.2,' and 'F7.2,' MeV'/
     x  6x,'Ntotal = 'i10)
      Isum=0
      Do 1 I=1,N
      Read(20,84,END=77) A(I),I5(I)
   84 Format(18x,E10.3,I6)
    1 Isum=Isum+I5(I)
      Sum=FLOAT(Isum)
      I=N-3
    4 I=I+1
      IF (I .EQ. N) goto 77
      IF (I5(I) .GT. 0) Goto 4
   77 N2=I
      Write(39,83) N,N2
```

```
   83 Format(6x,1H0,2I7,3(6x,1H0))
      S(1)=Float(I5(1))
      Do 7 I=2,N2
    7 S(I)=S(I-1)+Float(I5(I))
c Next are computations of integral efficiencies above "thresholds"
c   Choose two corresponding to 1/60th and 1/6th of 62 MeV.
c      (N.B. someday should just make this part of the input!)
      Ftwo=0.165
      Nterp=4
      Fint=EXTERP(A,S,Ftwo,N2,Nterp)
      C=Sum-Fint
      Eff=C/Totn
      D=0.0
      IF (C.LE.0.0) goto58
      P=0.01*Eff
      D=Eff*SQRT((1.0-P)/C)
   58 Type 60, Ftwo,Fint,Eff,D
      Fthree=4.747
      F3int=EXTERP(A,S,Fthree,N2,Nterp)
      C=Sum-F3int
      Eff3=C/Totn
      D=0.0
      IF (C.LE.0.0) goto 51
      P=0.01*Eff3
      D=Eff3*SQRT((1.0-P)/C)
   51 Type 60,Fthree,F3int,Eff3,D
   60 Format('   For'F7.3,' L.U., Integral ='F9.1,
      m  ' counts, Effic = ',F6.2,' +OR-'F6.2,' percent')
      Ilow=0
      Do 10 I=1,4096
      Sb=Slope*Float(I)
      B=Sb
      IF (Indx .EQ. 1) B=ETOL(2,Sb)
c   -B- is a light-unit value
      V=EXTERP(A,S,B,N2,Nterp)
      Ihi=IFIX(V+0.5)
      Id(I)=Ihi-Ilow
   10 Ilow=Ihi
      Z=0.0
      Do 15 I=1,4096,8
      K=I
      L=I+7
      Write(39,90) Z,(Id(M), M=K,L)
   90 Format(F7.1,8I7)
   15 Z=Z+8.0
      End file 39
      Type 95
   95 Format(//'   ***   End file  spectrum.dat '/)
      Stop
      End
```

REFERENCES

1. R. E. Textor and V. V. Verbinski, *05S: A Monte Carlo Code for Calculating Pulse Height Distributions due to Monoenergetic Neutrons Incident on Organic Scintillators*, ORNL-4160 (1968). See also M. A. Cleemput, *05S – A Version Suitable for Use on the DEC System-10*, ORNL/CF-82/268/R1 (1982).

2. V. V. Verbinski, W. R. Burrus, T. A. Love, W. Zobel and N. W. Hill, *Nucl. Instrum. Meth.* **65**, 8 (1968).

3. R. J. Kurz, *A 709/7090 FORTRAN II Program to Compute the Neutron-Detection Efficiency of Plastic Scintillator for Neutron Energies from 1 to 300 MeV*, UCRL-1139 (1964). See also S. A. Elbakr, J. W. Watson, and C. A. Miller, *Nucl. Instrum. Meth.* **115**, 115 (1974) for a correction to the Kurz program.

4. S. T. Thornton and J. R. Smith, *Nucl. Instrum. Meth.* **96**, 551 (1971).

5. N. R. Stanton, *A Monte Carlo Program for Calculating Neutron Detection Efficiencies in Plastic Scintillator*, Ohio State University Report No. COO-1545-92 (1971).

6. R. M. Edelstein, J. S. Russ, R. C. Thatcher, M. Elfield, E. L. Miller, N. W. Reay, N. R. Stanton, M. A. Abolins, M. T. Lin, K. W. Edwards, and D. R. Gill, *Nucl. Instrum. Meth.* **100**, 355 (1972).

7. V. Fajer and L. Alvarez, *Organic Scintillator Efficiency Using a Monte Carlo Code*, Hungarian Academy of Sciences, KFKI-1979-60 (1979) (in English). Their program's name is TAYRA.

8. R. A. Cecil, B. D. Anderson, and R. Madey, *Nucl. Instrum. Meth.* **161**, 439 (1979).

9. M. Anghinolfi, G. Ricco, P. Corvisiero, and F. Masulli, *Nucl. Instrum. Meth.* **165**, 217 (1979).

10. G. Dietze and H. Klein, *NRESP4 and NEFF4 Monte Carlo Codes for the Calculation of Neutron Response Functions and Detection Efficiencies for NE 213 Scintillation Detectors*, Physikalisch-Technische Bundesanstalt Report ND-22; ISSN 0572-7170 (1982).

11. E. DeKempeneer, H. Liskien, L. Mewissen, and F. Poortmans, *Nucl. Instrum. Meth.* **A256**, 489 (1987).

12. Y. Uwamino, K. Shin, M. Fujii, and T. Nakamura, *Nucl. Instrum. Meth.* **204**, 179 (1982).

13. D. C. Irving, R. M. Freestone, Jr., and F. B. K. Kam, *05R, A General-Purpose Monte Carlo Neutron Transport Code*, ORNL-3622 (1965).

14. T. S. Subramanian, J. L. Romero, F. P. Brady, J. W. Watson, D. H. Fitzgerald, R. Garrett, G. A. Needham, J. L. Ullmann, and C. I. Zanelli, *Phys. Rev. C* **28**, 521 (1983).

INTERNAL DISTRIBUTION

1. B. R. Appleton
2–6. J. K. Dickens
7. D. M. Hetrick
8. N. M. Hill
9. D. T. Ingersoll
10. J. K. Ingersoll
11–15. D. C. Larson
16. F. C. Maienschein
17–21. R. W. Peelle
22. F. G. Perey
23. B. D. Rooney
24. R. W. Roussin
25. R. R. Spencer
26. J. J. Dorning (consultant)
27. G. H. Golub (consultant)
28. R. M. Haralick (consultant)
29. D. Steiner (consultant)
30–31. Laboratory Records Department
32. Laboratory Records, ORNL–RC
33. Document Reference Section
34. Central Research Library
35. ORNL Patent Section

EXTERNAL DISTRIBUTION

36. Office of the Assistant Manager for Energy Research and Development, Department of Energy, Oak Ridge Operations, P. O. Box E, Oak Ridge, TN 37830
37. G. F. Auchampaugh, Los Alamos National Laboratory, P. O. Box 1663, MS D449-P3, Los Alamos, NM 87545
38. R. R. Keziah, Department of Physics, Air Force Academy, Colorado Springs, CO 80840
39. G. L. Morgan, Los Alamos National Laboratory, P. O. Box 1663, Group P-15, MS D406, Los Alamos, NM 87545
40. S. Wender, Los Alamos National Laboratory, P. O. Box 1663, Group P-3, MS D449, Los Alamos, NM 87545
41. S. L. Whetstone, Department of Energy, ER-23/GTN, 19901 Germantown Rd, Germantown, MD 20874
42. Warren Wilson, AFWL/AWYW, Building 416, Kirtland Air Force Base, New Mexico 87117-5008
43–52. Office of Scientific and Technical Information , P. O. Box 62, Oak Ridge, TN 37831