ornl

OAK RIDGE
NATIONAL
LABORATORY

MARTIN MARIETTA

OAK RIDGE NATIONAL LABORATORY
CENTRAL RESEARCH LIBRARY
CIRCULATION SECTION
4500N ROOM 175
LIBRARY LOAN COPY
DO NOT TRANSFER TO ANOTHER PERSON
If you wish someone else to see this report, send in name with report and the library will arrange a loan.

ORNL/TM-11214

MARTIN MARIETTA ENERGY SYSTEMS LIBRARIES
3 4456 0313940 4

Sampling and Analysis Protocols and Project Description for the Integrated Forest Study

S. E. Lindberg
D. W. Johnson
G. M. Lovett
H. Van Miegroet
G. E. Taylor, Jr.
J. G. Owens

Environmental Sciences Division
Publication No. 3321

OPERATED BY
MARTIN MARIETTA ENERGY SYSTEMS, INC.
FOR THE UNITED STATES
DEPARTMENT OF ENERGY

This report has been reproduced directly from the best available copy.

Available to DOE and DOE contractors from the Office of Scientific and Technical Information, P.O. Box 62, Oak Ridge, TN 37831; prices available from (615) 576-8401, FTS 626-8401.

Available to the public from the National Technical Information Service, U.S. Department of Commerce, 5285 Port Royal Rd., Springfield, VA 22161.
NTIS price codes—Printed Copy: A08. Microfiche A01

This report was prepared as an account of work sponsored by an agency of the United States Government. Neither the United States Government nor any agency thereof, nor any of their employees, makes any warranty, express or implied, or assumes any legal liability or responsibility for the accuracy, completeness, or usefulness of any information, apparatus, product, or process disclosed, or represents that its use would not infringe privately owned rights. Reference herein to any specific commercial product, process, or service by trade name, trademark, manufacturer, or otherwise, does not necessarily constitute or imply its endorsement, recommendation, or favoring by the United States Government or any agency thereof. The views and opinions of authors expressed herein do not necessarily state or reflect those of the United States Government or any agency thereof.

ORNL/TM-11214

ENVIRONMENTAL SCIENCES DIVISION

SAMPLING AND ANALYSIS PROTOCOLS AND PROJECT DESCRIPTION FOR THE INTEGRATED FOREST STUDY

S. E. Lindberg
D. W. Johnson[1]
G. M. Lovett[2]
H. Van Miegroet
G. E. Taylor, Jr.
J. G. Owens

Environmental Sciences Division
Publication No. 3321

---

[1]Biological Sciences Center, Desert Research Institute, P.O. Box 60220, Reno, NV 89506-0220

[2]Institute of Ecosystem Studies, Cary Arboretum, Millbrook, NY 12545

Date Published - August 1989

Prepared for the Electric Power Research Institute
Integrated Forest Study (RP2621)
(Activity No. 11 03 46 10 1)

Prepared by the
OAK RIDGE NATIONAL LABORATORY
Oak Ridge, Tennessee 37831-6285
operated by
MARTIN MARIETTA ENERGY SYSTEMS, INC.
for the
U.S. DEPARTMENT OF ENERGY
under contract DE-AC05-84OR21400

MARTIN MARIETTA ENERGY SYSTEMS LIBRARIES

3 4456 0313940 4

CONTENTS

Page

LIST OF FIGURES vii

LIST OF TABLES ix

ACKNOWLEDGEMENTS xi

ABSTRACT xiii

1. INTRODUCTION 1

2. SCOPE OF WORK 3

2.1 ATMOSPHERIC DEPOSITION 3

2.2 FOREST NUTRIENT DYNAMICS 5

3. DEPOSITION PROTOCOLS 8

3.1 GENERAL PROTOCOL DESCRIPTION AND STATEMENT OF WORK . . . 8

3.2 SAMPLING REQUIREMENTS FOR INTENSIVE DEPOSITION SITES . . 11
3.2.1 Wet Deposition 11
3.2.2 Dry Deposition 12
3.2.3 Fog and Cloud Water 13
3.2.4 Meteorological Data 14

3.3 RATIONALE AND DETAILED DESCRIPTION OF METHODS 14
3.3.1 Wet Deposition 15
3.3.1.1 Equipment 15
3.3.1.2 Installation 16
3.3.1.3 Preparation 19
3.3.1.4 Operation (Event Sampling) 20
3.3.1.5 Operation (Weekly or Continuous Sampling) 24
3.3.1.6 Sample Handling, Extraction, and Analysis 25
3.3.1.7 Data Manipulation 26
3.3.2 Dry Deposition (Deposited Coarse Particles) . . . 26
3.3.2.1 Equipment 26
3.3.2.2 Installation 28
3.3.2.3 Preparation 29
3.3.2.4 Operation (Event Sampling) 30
3.3.2.5 Sample Extraction and Analysis 31
3.3.2.6 Data Manipulation 32

Page

3.3.3 Dry Deposition (Concentrations of Airborne Fine Particles and Vapors) 32
3.3.3.1 Equipment 33
3.3.3.2 Preparation 35
3.3.3.3 Procedure 36
3.3.3.4 Filter Loading 37
3.3.3.5 Installation 38
3.3.3.6 Operation 39
3.3.3.7 Sampling, Handling, Extraction, and Analysis 39
3.3.3.8 Unloading and Analysis 40
3.3.3.9 Data Manipulation 43

3.4 CLOUD AND FOG DEPOSITION 45
3.4.1 Equipment 45
3.4.2 Sampling Strategy and Procedure 46
3.4.3 Sample Handling 47
3.4.4 Data Manipulation 47

3.5 METEOROLOGICAL MEASUREMENTS 48
3.5.1 Equipment 49
3.5.2 Installation and Operation 49
3.5.3 Data Manipulation 54

4. OZONE MONITORING PROTOCOLS 56

4.1 RATIONALE 56
4.1.1 Equipment 56
4.1.2 Installation 56
4.1.3 Operation 60
4.1.4 Data Acquisition 60
4.1.5 Data Analysis 61

5. SOIL CHEMISTRY AND NUTRIENT CYCLE MONITORING PROTOCOLS 63

5.1 SAMPLING PROTOCOLS FOR SOILS AND NUTRIENT CYCLING WORK . 63
5.1.1 Plot Size and Vegetation Inventory 63
5.1.2 Vegetation Sampling 63
5.1.3 Litter and Soil Sampling 64
5.1.4 Soil Sampling for Lab Studies 65
5.1.5 Solution Sampling 65
5.1.6 Litterfall 67

5.2 SOIL METHODS 67
5.2.1 Cation Exchange Capacity and Exchange Cations . . 67
5.2.2 Total Soil Nitrogen and Phosphorus 68
5.2.3 Total Soil Cations 68
5.2.4 Soil Water and Element Flux Calculations 69

Page

5.3 ADDITIONAL RECOMMENDED AND OPTIONAL MEASUREMENTS ON SOILS 71
5.3.1 Soil Temperature 71
5.3.2 Soil Mineralization 71
5.3.3 Protocols for Recommended and Optional Measurements 72
5.3.3.1 Buried Bag Incubation Study 72
5.3.3.2 Sulfate Mineralization 74
5.3.4 Protocol for Resin Cores 75
5.3.4.1 Materials 75
5.3.4.2 Methods 75

6. QUALITY ASSURANCE ACTIVITIES FOR THE INTEGRATED FOREST STUDY . 79

6.1 DEPOSITION TASKS 79
6.1.1 Site-Specific Laboratory Activities 79
6.1.2 Site-Specific Field Activities 80
6.1.3 Site Specific Data Activities 83
6.1.4 Intersite Activities 83

6.2 NUTRIENT CYCLING TASK 84
6.2.1 Laboratory Activities 84
6.2.2 Field Sampling Activities 84

7. PROJECT SUMMARY AND DESCRIPTION 87

7.1 RESEARCH OBJECTIVES 87

7.2 RESEARCH SITES 92
7.2.1 Site Support 99
7.2.2 Principal Investigators 100

7.3 SCOPE OF WORK 100
7.3.1 Atmospheric Deposition 103
7.3.2 Forest Nutrient Dynamics 107

7.4 PROJECT ORGANIZATION, DATA MANAGEMENT, AND SYNTHESIS . . 109

APPENDIX: ADDENDUM TO DEPOSITION PROTOCOLS 115

A.1 ESTIMATION OF DRY DEPOSITION 115

A.2 METEOROLOGICAL DATA 117

A.3 PLANT SURFACE AREA DATA 118

A.4 COLLECTION OF CLOUD AND FOG WATER 120

A.5 CLOUD WATER DEPOSITION 123

Page

A.5.1 Cloud or Fog Water Chemistry 123
A.5.2 Deposition Rates 123
A.5.3 Annual Cloud Water Input Estimates 126

A.6 CHARACTERISTICS OF THE FOREST CANOPY AT TOWER SAMPLING SITE 126

A.7 LOCATION OF PRECIPITATION VOLUME AND CHEMISTRY SAMPLERS 127

REFERENCES 129

LIST OF FIGURES

Figure		Page
1	Locations of forest study sites in the Integrated Forest Study	2
2	Schematic representation of deposition sampling equipment established at each research site in the Integrated Forest Study	4
3	Schematic representation of nutrient cycling sampling equipment established at each research site in the Integrated Forest Study	6
4	Apparatus for exposure of dry deposition plates above forest canopy with automatic protection from precipitation	27
5	Schematic of filter pack used for collection of air samples above the canopies at each research site in the Integrated Forest Study (design from J. Womack, Atmospheric Turbulence and Diffusion Division, Oak Ridge, TN)	34
6	Schematic of lightening protection with lightening rod and downlead for meteorological tower (design from R. Hosker, Atmospheric Turbulence and Diffusion Division, Oak Ridge, TN)	51
7	Schematic of lightening protection as plan view of grounding rods and connecting "belt" surrounding meteorological tower base (design from R. Hosker, Atmospheric Turbulence and Diffusion Division, Oak Ridge, TN)	52
8	Schematic representations of the degrees of S, N, and acid saturation of previously studied and new research sites	95
9	Indication of the elevational gradient covered by several of the in- and near-mountain IFS sites	97
10	A representation of the forest nutrient cycle showing the pools and fluxes to be determined in the field measurements tasks, and the focus of the experimental tasks of the IFS.	104
11	Organizational chart of the field measurements and experimental tasks of the IFS showing principal investigators in each case	110

Figure | Page

12 Schematic of group leader structure for integration purposes 111

LIST OF TABLES

Table		Page
1	Approximate power requirements	18
2	Events	21
3	Routine event samples	23
4	Meteorological system components	50
5	Key, critical, and specific objectives of the Integrated Forest Study	89
6	Sites Participating in the Integrated Forest Study on Effects of Atmospheric Deposition	93
7	Site locations and investigators responsible for the field measurement tasks	101
8	Investigators responsible for the experimental tasks associated with the Integrated Forest Study on Effects of Atmospheric Deposition	102
9	Standardized data being reported for each field site in the Integrated Forest Study on Effects of Atmospheric Deposition	113

ACKNOWLEDGEMENTS

The Integrated Forest Study is funded primarily by the Electric Power Research Institute (L. F. Pitelka, Project Manager). However, several sites in the IFS participate under partial to full support from other sources. The assistance of these agencies is gratefully acknowledged: Southern Company Services (GL site), U. S. Forest Service (ST, WF, CP, MS, FS sites), Empire State Electric Research Corporation and New York State Energy Research and Development Administration (HF site), Canadian Forest Service (TL site), U. S. Department of Energy (LP and ST sites), Norwegian Forest Research Institute and Norwegian Institute for Air Research (NS site). The authors thank Ray Hosker, Jim Womack, and Detleff Matt of the National Oceanic of Atmospheric Administration's Atmospheric Turbulence in Diffusion Division (ATDD) for significant contributions to the development of the protocols for filter pack measurements and collection of meteorological data described in this report, and Lynn Satterfield, Dennis Baldocchi, and Tilden Myers, also of ATDD, for assistance with the code of the ATDD multiple resistance routine for dry deposition velocity. We appreciate the help of Shirley Lawson and Delores Deaton in compiling this report and E. Bondietti for compiling an early version of the IFS Project Summary Report now included as Section 7 of this report. Finally, we thank J. W. Huckabee for his early efforts in supporting the IFS project.

ABSTRACT

LINDBERG, S. E., D. W. JOHNSON, G. M. LOVETT, H. VAN MIEGROET, G. E. TAYLOR, Jr., and J. G. OWENS. 1989. Sampling and analysis protocols and project description for the Integrated Forest Study. ORNL/TM-11214. Oak National Laboratory, Oak Ridge, Tennessee. 115 pp.

The principal objective of the Integrated Forest Study is to determine the effects of atmospheric deposition of major ions on forest nutrient cycling. The research has been conducted at forested sites in the northwestern, northeastern, and southeastern United States and in Canada and Norway. The sites selected for this study represent a range of conditions in climate, air quality, soils, and vegetation, which will facilitate testing hypotheses about the effects of atmospheric deposition on forest nutrient cycles. Research in the Integrated Forest Study is divided into two major sections: atmospheric deposition and forest nutrient dynamics. To assure comparability among data sets collected at each site, we developed a common set of protocols, which are described in detail in this report.

1. INTRODUCTION

The principal objective of the Integrated Forest Study (IFS) is to determine the effects of atmospheric deposition of sulfur and nitrogen on forest nutrient cycling. The study integrates a field measurements component, involving quantification of atmospheric deposition and nutrient cycling in a range of forest types, and experimental research, including laboratory and field studies to investigate selected atmospheric and soil processes in greater detail (not described in this report). To ensure comparability among data sets collected at various sites as part of the field measurements tasks, we have developed a common set of protocols, which are described in detail in this report. This report is one of a series of reports describing the sites studied in the IFS (Bondietti, 1989) and describing preliminary results of the study (Lindberg and Johnson, 1989a; Lindberg and Johnson, 1989b).

The research has been conducted at forested sites in the northwestern, northeastern, and southeastern United States and in Canada and Norway (Fig. 1). The sites selected for this study represent a range of conditions in climate, air quality, soils, and vegetation, which will facilitate testing hypotheses about the effects of atmospheric deposition on forest nutrient cycles. This aspect of the IFS is described in Section 7 of this report.

ORNL-DWG 88-2094A

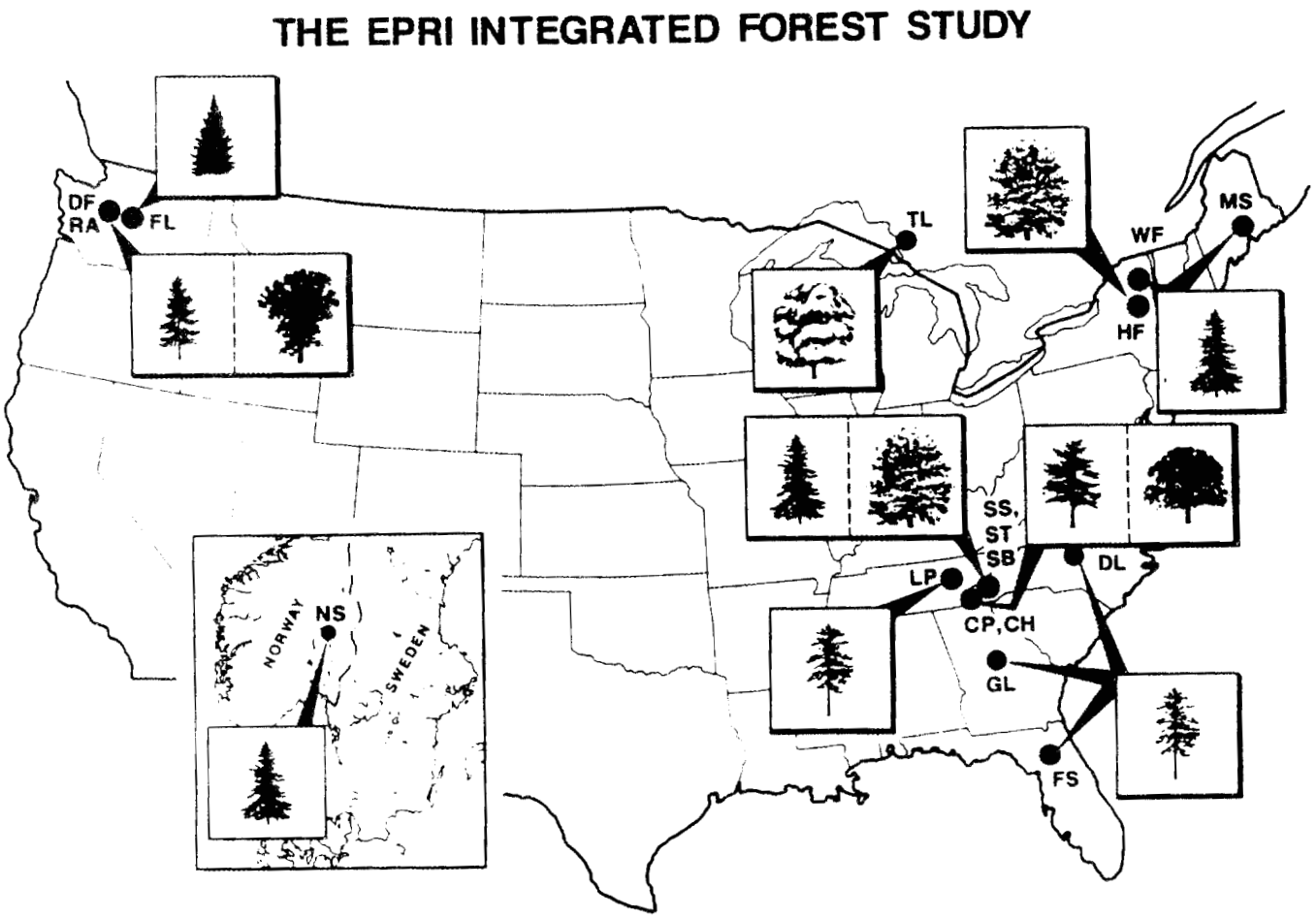

Fig. 1. Locations of forest study sites in the Integrated Forest Study. Site codes are as follows: ST=Great Smoky Mountains National Park, NC (spruce at 1730 m elevation); DL=Duke Forest, NC (loblolly pine at 215 m); WF=Whiteface Mt., NY (spruce/fir at 1000 m); LP=Oak Ridge, TN (loblolly pine at 300 m); TL=Turkey Lakes, Ontario (mixed hardwood at 350 m); NS=Nordmoen, Norway (spruce at 200 m); GL=Grant Forest, GA (loblolly pine at 175 m); CP=Coweeta, NC (white pine at ~1000 m); HF=Huntington Forest, NY (mixed hardwood at 530 m); RA=Thompson Forest, WA (red alder at 100 m); DF=Thompson Forest, WA (Douglas fir at 100 m). FS=Gainesville, FL (slash pine at 100 m); MS=Howland, MN (spruce at 60 m).

2. SCOPE OF WORK

Research in the IFS is divided into two major sections: atmospheric deposition and forest nutrient dynamics. These, in turn, are organized into field monitoring tasks and experimental tasks. In addressing these objectives, the atmospheric deposition tasks will provide estimates at several sites of the rates of atmospheric deposition to the canopy by precipitation, dry deposition of vapors and particles, and cloud and fog interception, as well as the throughfall (TF) and stemflow (SF) return to the forest floor. These measurements, plus the results from manipulative experiments, will be used to determine the effects of deposition on important canopy processes. The forest nutrient cycling tasks will provide estimates of element fluxes in litter and soil systems, estimates of internal H^+ production, and characterization of key processes leading to S, N, and H saturation in soils. The results of these tasks will be combined in assessments of atmospheric deposition effects on forest nutrient cycles which can, in turn, be applied to assessments of nutritional causes of forest decline and long-term effects on productivity.

2.1 ATMOSPHERIC DEPOSITION

There are four research tasks within the atmospheric deposition section. The field measurements task quantifies deposition fluxes of major ions to the canopy and to the forest floor, using the protocols and equipment described in this report (Fig. 2). This involves determination of wet-only precipitation chemistry for samples collected

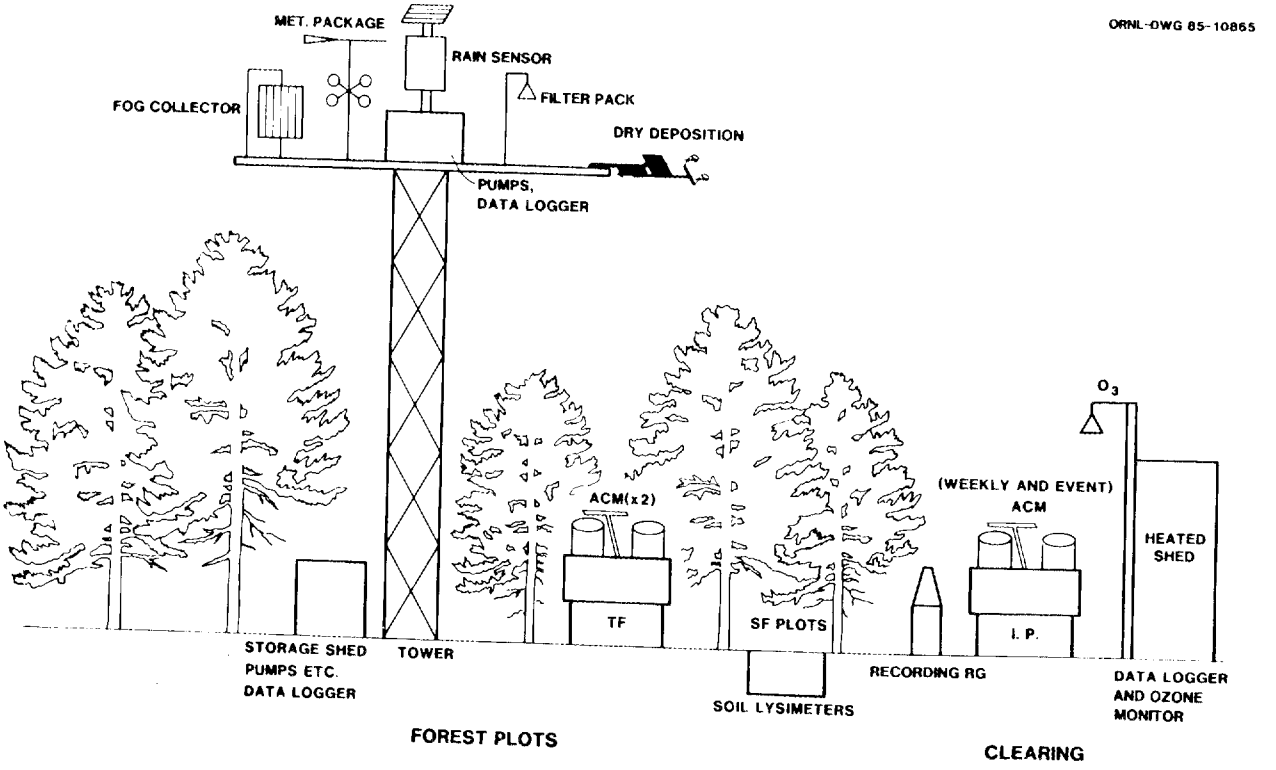

Fig. 2. Schematic representation of deposition sampling equipment established at each research site in the Integrated Forest Study. ACM = automatic wet-only precipitation collector, Met. Package = standard meteorological equipment, TF = throughfall, SF = stemflow, RG = standard weighing bucket continuously recording rain gage, I.P. = incident precipitation, O_3 = ozone monitor.

on an event basis above (incident precipitation) and below (SF and TF) the forest canopy and of the chemistry of fog and cloud water at each site. In addition, the chemistry of airborne particles and vapors and of coarse deposited particles is determined from atmospheric samples of surface-deposited material. These chemical data are combined with measurements of hydrology, canopy structure, meteorology, and modeling results to estimate total deposition fluxes to the canopy and forest floor.

2.2 FOREST NUTRIENT DYNAMICS

There are four tasks within the section on forest nutrient dynamics. The monitoring task evaluates element fluxes and contents under ambient conditions in the forest ecosystems under study using the protocols described in this report. To accomplish this, all sites are instrumented with bulk precipitation (in addition to detailed atmospheric sampling at selected sites), TF, SF, litterfall, and soil solution (lysimeter) collectors (Fig. 3). Lysimeters are of the tension type, utilizing fritted glass in instances where low soil solution pH (<4.5) is likely (to avoid the release of Al^{3+} from plates) or ceramic/Alundum plates where soil solution pH is >4.5. Either an electric or mechanical vacuum system is used to supply the necessary 0.1-atm constant vacuum. In addition to the flux measurements described above, the total contents of major nutrients in all ecosystem components, as well as soil available and exchangeable contents, are determined.

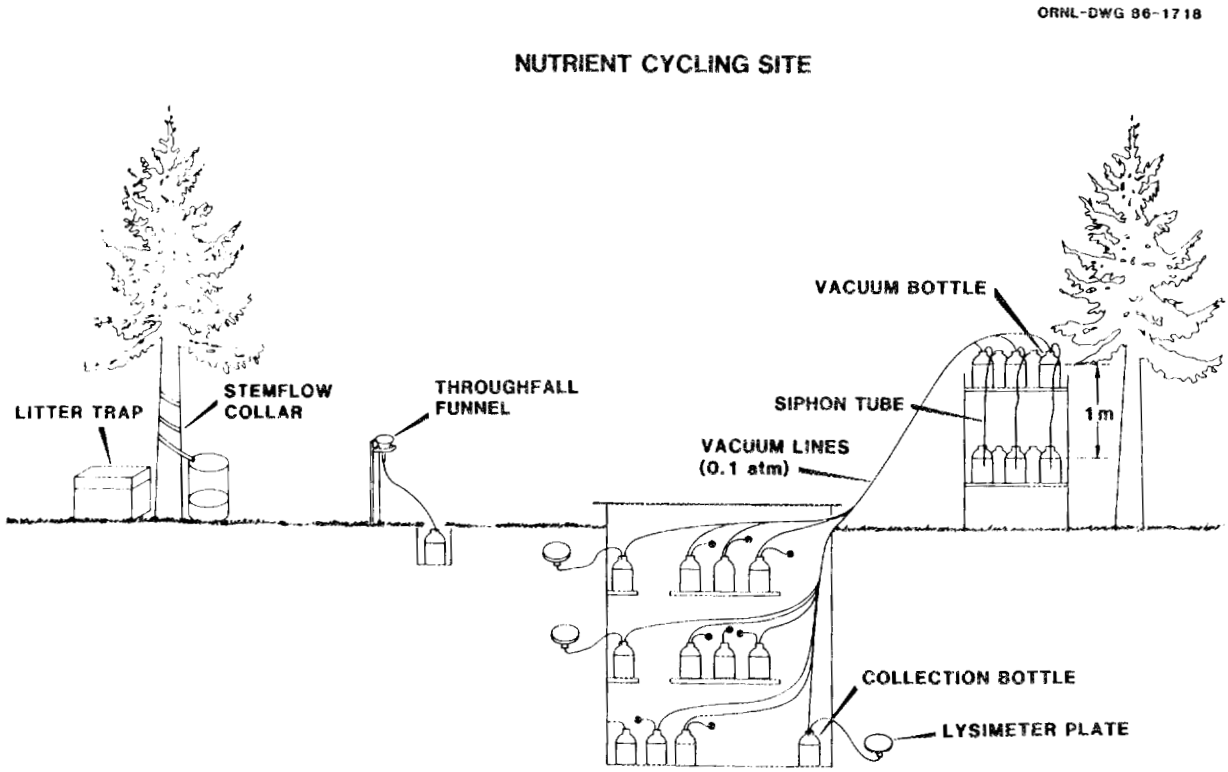

Fig. 3. Schematic representation of nutrient cycling sampling equipment established at each research site in the Integrated Forest Study.

Measurements of ionic fluxes in solution allow estimations of the contributions of internally generated acids as well as SO_4^{2-} to the total leaching rates in these ecosystems. Uptake and accumulation of elements by vegetation completes the budget and allows forecasts of potential soil changes due to acid deposition and the natural processes of leaching and vegetation uptake (Fig. 3) as illustrated.

3. DEPOSITION PROTOCOLS

3.1 GENERAL PROTOCOL DESCRIPTION AND STATEMENT OF WORK

The following is an abbreviated description of the full protocols for deposition sampling which are described in Sect. 3.3. A site for intensive sampling of deposition should be installed near the soil/lysimeter plots to assure comparable data for the basic monitoring, soil chemistry, and nutrient cycling studies. The site should be located with concurrence of any other local investigators who are responsible for the soil and vegetation sampling at this same time. The site should not be located adjacent to any local emission sources or dusty, heavily traveled roads. This site should include a meteorological tower extending 5-10 m above the mean height of the forest canopy, with a small instrument shed at its base. The tower should be outfitted with standard 110-V power at the base, canopy top, and tower top.

The following equipment is installed at the site as described in Sect. 3.3: meteorological package (wind vane, anemometer, radiometer, temperature and relative humidity sensors), dry deposition collector, aerosol and vapor filter pack, fog/cloud water collector, ozone monitor, aerosol vacuum pumps, data logger, wet-only precipitation and TF collectors, SF collars, and recording rain gage (see Fig. 2). Adjacent to each of the wet-only samplers for incident precipitation (one sampler) and TF (two samplers) is one bulk deposition collector for direct comparison. The site operators are responsible for operation and maintenance of all samplers, meteorological equipment, and the ozone

monitor as described in Sect. 3 and 4. Sample collection for the intensive deposition tasks of the project is done on a precipitation event basis, as described in Sect. 3.3.1. Prior to the event, dry deposition, vapors, and aerosols are collected at the tower site. Hence, a complete "event" includes the preceding dry period and the following wetfall. Samples from all events are analyzed if successfully collected. During seasons when well-defined "events" occur infrequently, these definitions must be flexible. At high-elevation sites samples of cloud water are made from non-precipitating clouds to avoid contamination of the cloud water by rainfall. Cloud water samples are collected with a passive collector from as many such events as possible.

Over the course of each dry/wet event, incident precipitation, TF and SF (as wet-only), SO_2 and HNO_3 vapors, aerosols, and large particle dry deposition to inert surfaces are sampled as described in Sects. 3.3.2 and 3.3.3. Ozone, wind speed and direction, temperature, solar radiation, relative humidity, duration of fog or cloud immersion, and precipitation amount are monitored continuously throughout the year. Specific information on the types of samplers utilized for each type of sample, the vendor (if to be purchased by each site), and details on the operation of the collectors are provided in Sects. 3.5 and 4.

Air chemistry and dry deposition samples should be collected starting 1-2 d prior to the expected start of a precipitation event. Precipitation, TF, and SF samples should be collected and returned to the laboratory as soon after the end of the event as possible. Aliquots of selected samples for organic acid analyses are sent to Oak Ridge

National Laboratory (ORNL). All samples must be sent in appropriately cleaned bottles, well sealed, preserved with chloroform, and refrigerated (blue ice), along with appropriate extraction and bottle blanks. Samples should be refrigerated on-site during preparation and should be mailed as soon as possible. For the majority of the analyses which will be done by site investigators, samples should be analyzed without undue delay, along with the necessary quality assurance samples provided by ORNL. Details on the procedures for preparation of filters, cleaning of filter holders, fog collectors, bottles, etc., extraction of aerosol and vapor filters, extraction of dry deposition plates, and suggested vendors for filters and plates are in Sect. 3.3.

Chemical analyses to be performed on individual samples are as follows: concentrations of H^+ (as pH, K^+, Mg^{2+}, Na^+, Ca^{2+}, NH_4^+, NO_3^-, SO_4^{2-}, Cl^-, PO_4^{3-}) and alkalinity (by titration of those samples with a pH greater than 5) on all fog, rain, snow, TF, SF, deposition plate extracts, and aerosol extracts; SO_4^{2-} and NO_3^- on SO_2 and HNO_3 filter extracts. Total N, total P, and Al^{3+}, and organic acid analyses should be done on selected deposition samples (wet and dry) as described in Sect. 3.3.1.6.

The site operators are responsible for recording, in an accessible computer file, the following data for each sampled wet/dry event: atmospheric concentrations of major ions; deposition rates to artificial surfaces; solution chemistry of major ions in wet-only precipitation, fog water, SF, and TF; duration of antecedent period; duration of the event; amount of precipitation, fog, SF, and TF collected; duration of fog collection; sampled air volume for filter pack and fog collectors;

and means of meteorological variables for the antecedent period and the precipitation event. In addition, for each annual report, the site investigators should calculate annual and seasonal mean values for precipitation and fog chemistry, atmospheric concentrations, water fluxes, and meteorological variables.

The meteorological, chemical, and hydrological data are used to calculate input to each forest by using published models and methods developed and tested at ORNL for the IFS project. These methods will be applied in consultation with investigators at each site.

3.2 SAMPLING REQUIREMENTS FOR INTENSIVE DEPOSITION SITES

3.2.1 Wet Deposition

1. Precipitation as wet-only on event basis, for all events, in a forest clearing located near the forest plots.
2. TF as wet-only on an event basis, for all events, below canopy at a sufficient number of replicate sites to characterize the 0.1-ha forest plot.
3. SF on an event basis, for all events, at the above sites in the 0.1-ha forest plot.
4. Precipitation, TF, and SF amounts as centimeters of rainfall for each event at each site from recording rain gages and wedge-type or similar TF gages, and from volume measurements of SF samples. Use two-three TF gages near each sampler to estimate TF amounts.

5. Storm characteristics for each event including antecedent dry period (hours), duration of storm (hours), and number of events collected as one sample (event definition: measurable rainfall occurring between two dry periods of $\geq$6-hr length. These data are best determined from the weekly weighing bucket rain gage chart.
6. Analyze all wet-only samples for all major cations/anions, conductance, and pH for every event; for Al, total P, and total N for selected events. Send to ORNL for organic acids and weak acid titrations for selected events. (Send 30-40 mL of sample in a bottle with 200 μL of chloroform; include rain plus a composite TF and composite SF sample from any given event.)
7. Snow sampling is a special case. TF during snow has little meaning, so event collection is less important. The collectors may have to be modified by replacing bottles and funnels with a plastic sampling bag inside of bucket.

3.2.2 Dry Deposition

1. Aerosols, HNO_3, and SO_2 using filter packs for dry periods between storms, for as many events as possible. The dry periods should be $\geq$ 72 h at background sites, 36-48 h at rural and urban sites for sufficient sample. The minimum time is best determined from experience at each site.
2. Dry deposited coarse particles collected on deposition plates on same schedule as above.
3. Continuous records of ozone, and SO_2 and NO_x, if available.

4. Characteristics of dry period including total dry duration (hour) from recording clock on dry collector, mean air flow of pump (liters per minute), total air volume sampled (cubic meters), and amount of precipitation (if any) which occurred during the dry experiment.
5. Extract and analyze all dry samples for all major cations/anions and pH (pH on Teflon filter extract only) for all events. SO_2 and HNO_3 filters are both analyzed only for SO_4^{2-} and NO_3^-.

3.2.3 Fog and Cloud Water

1. Visual or other measurements of fog/cloud immersion frequency and duration (hours) for <u>all</u> events, whether sampled or not.
2. Cloud water or fog chemistry for as many events as possible, using active collectors at low-elevation sites and passive string collectors at high-elevation sites. Low-elevation fogs are most easily sampled as one event over several hours in the same bottle. High-elevation clouds are best sampled sequentially into parts of similar duration.
3. Record fog/cloud characteristics for sampled event including duration of each sample or subsample, flow rate for active collector, volume of sample collected, total flow sampled, and wind speed during collection.
4. Analyze all samples for all major cations/anions, conductance, and pH.
5. Calculate liquid water content (LWC) for each sample.

3.2.4 Meteorological Data

1. Continuous records of wind speed, wind direction, temperature, relative humidity, and solar radiation at the tower above the canopy, and precipitation amount in the clearing.
2. Program the data logger to calculate hourly means of wind speed, temperature, relative humidity, solar radiation; hourly sums of rainfall; and hourly maximum wind speed; hourly mean wind vector; hourly mean wind direction; and hourly standard deviation of the wind direction (using a wind vector calculation program).
4. Record the data monthly into a 1-2-3 Lotus spreadsheet and calculate the means for the overall period represented by that particular data record. For wind direction compute a frequency distribution of the wind direction in eight compass quadrants. Repeat these summaries for the full duration of each dry period actually sampled during this particular data record.

3.3 RATIONALE AND DETAILED DESCRIPTION OF METHODS

The protocols to be used for intensive sampling of deposition at sites in the IFS have been developed largely based on research on wet and dry deposition done at Walker Branch Watershed over the past 10 years, on work done on cloud water deposition at Mt. Moosilauke during 1979-1981, and on recent work by the National Acid Precipitation Assessment Program (NAPAP) community on dry deposition methods. Much of the rationale for the design of this part of the study is described in the following publications: Lindberg and McLaughlin 1986, Lovett and

Lindberg 1984, Lindberg et al. 1986, Hicks et al., 1987, Richter and Lindberg, 1988, Lindberg et al., 1988a,b, Lindberg et al., 1989a,b.

This protocol is divided into several major sections covering sampling of wet deposition above and below the canopy, dry deposition, cloud/fog water input, meteorological parameters, and ozone. Within each section we provide information on equipment acquisition, installation, cleaning and preparation for sampling, operation, sample handling and extraction, analyses, and data manipulation (calculated variables).

We have attempted to describe the methods in sufficient detail for those site operators who have not been involved in such studies in the past. However, we understand that some of the methods will have to be modified because of certain site-specific characteristics. For these reasons, the protocols are considered as a "working plan" subject to revision as the need arises, after consultation with project management at ORNL.

3.3.1 Wet Deposition

3.3.1.1 Equipment

Each site is responsible for obtaining three automatic wet/dry collectors of the Aerochemetrics* design to collect event wetfall. It would be highly desirable to have a fourth such collector to sample wetfall on a continuous (weekly) basis. Many sites will have this data as part of ongoing National Atmospheric Deposition Program/National

---

*Aerochemetrics is a trademark of the Aerochemetrics Corp.

Trends Network (NADP/NTN) programs at the Electric Power Research Institute (EPRI) sites. Obtain the standard wet/dry collector on legs with the peaked polycarbonate roof and the polycarbonate roof assembly; also obtain the trickle charger to allow battery backup in case of power failure.

Samples should not be collected directly in the sampler buckets (as done in the NADP network), but a bottle/funnel arrangement should be used inside of the buckets (see below). This eliminates the need for washing and storage of several large buckets. Hence, drill a few holes in the sides of the buckets for drainage.

The inside bucket height is 25.5 cm, so the bottle/funnel must fit below this. A standard 16-oz. (~5-in.-OD) funnel in a 500- or 1000-mL (16- to 32-oz.) rectangular widemouthed bottle, both made of polyethylene or polypropylene, should work. The combination of the 5-in. funnel and 500-mL bottle will sample a 5.5-cm rain event without overflow, while the 1000-mL bottle will sample an 11-cm event. Use whichever seems appropriate for specific site conditions.

Equipment for the bulk precipitation, TF, and SF collectors is described in Sect. 5.

3.3.1.2 Installation

The technical details on the setup and physical operation of the samplers themselves are described in the instruction booklet supplied by the manufacturer and in the NADP/ACM manual (Bigelow and Dosset 1988). The wet/dry samplers should be deployed as follows: one to measure incident precipitation at an appropriate clearing near the plots and two

located beneath the canopy to measure TF at the plots (Fig. 2). An appropriate clearing is one meeting NADP specifications regarding size, proximity to and height of surrounding trees, and overhanging objects (see publications on NADP siting criteria; Biglow and Dossett, 1988). The wetfall collectors require standard 120-V power at each location (Table 1). The bulk collectors should be located adjacent to these collectors. The additional weekly wet collector should be located as close to the experimental sites as possible, in a suitable clearing. The SF collectors should be situated in the plots as described in Sect. 5. It is desirable to have these located on the same trees being sampled by the wet-only TF collectors.

The continuously recording rain gage supplied with the meteorological package (Sect. 3.5) or a standard recording weighing bucket rain gage should be deployed to record the incident precipitation as collected by the sampler used in the clearing. There should be a backup device in the clearing as well as additional devices to record precipitation amount near the TF samplers. Standard plastic wedge-type gages are useful in this regard. They should also be located adjacent to the wet-only collectors such that the opening is near but below the level of the collection funnel. SF volume for event samples should be recorded as described in Sect. 5.

Table 1. Approximate power requirements

1. ACM wet-only collector (AC power)
   a. 0.1 A = continuous operation
   b. 0.3 A = surge
   c. 0.6 A = heater when wet
2. Deposition plate sampler (AC)
   a. 0.1 A = continuous operation
   b. 0.3 A = lid opening (to expose plates after the unexpected rain)
   c. 0.6 A = sensor when cold (thermostat operated)
3. Air pumps (AC; DC pumps are also available)
   a. ORNL/NOAA pump = 1.8 A for continuous operation
   b. Anderson Co. = 2 A for continuous operation
   c. Gast Mfg. Co. = 4 A for continuous operation.
   d. Sierra Mfg. Co. = 2.5 A for continuous operation
   e. All pumps have a starting average draw that is roughly 2 times normal
4. Meteorological package (AC not required, runs on DC)

3.3.1.3 Preparation

As mentioned above, we do not use the bucket for sample collection, but place funnels and bottles inside of the buckets. Each bucket will hold two to three such funnel/bottles for replicates to provide sufficient sample for analysis from small volume events by compositing and to allow different bottle washing or sample preservation methods to be used within the same collector. Although the dry side is not used for collection of "dryfall," a matching bucket should be kept on the dry side to prevent contamination of the underside of the lid of the collector by dust, debris, condensation, etc. It is important during sampler setup to be sure that the collector lid sits properly over the bucket to prevent contamination by wind-blow debris and absorption of atmospheric vapors.

The bottles and funnels should be dedicated to precipitation and throughfall samples only and are washed between collections by thorough rinsing with double-distilled or distilled/deionized water (DDW), followed by 24-h soaking in the same, and final rinsing with DDW. Extra sampler buckets with lids make good funnel-soaking containers. The bottles are sealed and stored in closed cabinets between events, and the funnels are sealed in new plastic bags between use. Smaller polyethylene bottles for storage of samples prior to analysis are washed and stored similarly.

The samplers should also be cleaned prior to each use, as they tend to accumulate dry deposition between events that can splash off the lids into the sample bottles during rain. In preparation for sampling in the field, we clean the entire sampler lid with Kimwipes soaked in DDW,

followed by a rinsing with a squirt bottle of DDW. The underside of the lid, which is a foam pad covered with plastic, should also be wiped with a soaked Kimwipe. Finally, the rim of the bucket on the dry side must be wiped to prevent contamination of the underside of the lid. We suggest that each bucket be replaced with a cleaned bucket every month. The old buckets can be rinsed, soaked, and stored as above.

In preparation for event sampling, the wetness sensor should be checked for proper operation using a squirt bottle or wet finger. The purpose of this device is to open the sampler during precipitation by sensing a change in resistance of the grid. It is important that the grid be kept clean of litter, bird droppings, and similar debris to assure uniform sensing of wetness. Note that you can adjust the temperature of the thermostated heater in the sensor base to achieve optimum sensitivity (see manual). The setting from the manufacturer should be appropriate, but you may want to make some adjustments after observing operation for some time. One good indication of a delayed opening problem is collection of significant quantities of water in the dry side bucket following a rain event.

3.3.1.4 Operation (Event Sampling)

Sampling of precipitation on an event basis is an important objective of the project and one that can be met only with some dedication on the part of the site scientists. We define a precipitation event as "measurable precipitation (>0.03 cm) occurring between two 6-h periods of no measurable precipitation" (see Table 2). This definition has worked well in the climate in the southeastern

Table 2. Events

1.	Attempt to sample three or more wet/dry events per month, and all wet events
2.	Event sampling is most important during the growing season
3.	Wet/dry period = ~2- to 3-d dry period followed by wet event
4.	Wet event = 6-h dry period followed by precipitation of >0.03 cm followed by another 6-h dry period

United States but must be subject to modification at the other sites based on the past experiences of the site personnel.

In the southeastern United States, we have the best chance of collecting well-defined single-event samples during the period April to October. This coincides with the forest growing season, when we are most interested in quantifying rain/canopy interactions and when dry deposition to the deciduous canopy is highest. This may not be the case at northern or high-elevation sites, however. Appropriate changes should be made based on experience if necessary. As you consider this, keep in mind the need to maximize the number of precipitation events sampled above and below the canopy, particularly during the growing season, while at the same time sampling a sufficient and representative fraction of the total precipitation to allow calculation of total wet (not bulk) deposition. For this reason the operation of the continuous, weekly wet-only sampler will be important (see below). You should attempt to collect all samples as individual events if possible (see Tables 2 and 3), with the hope of being completely successful in event collection for several events each month.

In preparing for wet event sampling, we generally place the bottle/funnel arrangements in the wet samplers anywhere from several hours to a few days prior to predicted precipitation. In many cases this will occur sometime during the dry deposition sampling period, which precedes the wet event as described below. Because the samplers provide a positive seal over the buckets and prevent contamination by dry deposition, leaving the bottles unattended in the field prior to an event is no problem for the rain and TF samples. SF will not be

Table 3. Routine event samples

1. Dry period (see Sects. 3.3.2 and 3.3.3)

    a. Suspended particles
    b. HNO_3 vapor (using nylon filter behind particle filter "a" above)
    c. SO_2 (using treated filter behind particle filter "b" above)
    d. Deposited particles (primarily those of >2 μm diameter)
        i. Using inert deposition (petri) plates
        ii. Placed in automatic dry deposition collector or exposed by hand

2. Wet event

    a. Incident precipitation, wet-only (one collector)
    b. Throughfall, wet-only (replicate collectors)
    c. Stemflow, event basis (replicate collectors)

protected in the same way, however. We suggest that the SF collars to be used for the event sampling be washed by hand using a squirt bottle with DDW and that new collection bottles be placed under the collars as soon before the event as practical. This will generally coincide with setup of the wet-only collectors. The event SF collars should be located in the same plot as the bulk SF collars described in the "soils" protocol and should be made of the same material.

Following the precipitation event, the wet samples should be retrieved as soon as practical to minimize post-collection chemical changes in the samples, particularly for hydrogen, ammonium, and nitrate ions. All samples should be sealed in the field and returned to the laboratory for analysis without delay (see below).

3.3.1.5 Operation (Weekly or Continuous Sampling)

As discussed above, it will be necessary to sample as much as possible of the incident precipitation as wetfall-only. This can be accomplished in one of three ways: (1) locate the experimental site next to an existing NADP/NTN or MAP3S site, (2) obtain an additional sampler for the site, or (3) operate the event sampler (described above) as a continuous sampler whenever event collections are not possible, taking samples on approximately a weekly basis. In any case, follow the above protocol, with the appropriate change in collection interval, and be sure to distinguish the single-event samples from the multiple-event samples during sample identification. To assure continuous sampling of TF/SF, we will rely on the weekly bulk collections (see Sect. 5) and on the ability of each site to sample as many events as possible.

It is possible that at many of the high-elevation or maritime sites, winter sampling will consist of several continuous-type samples but fewer event samples, because of climatic or logistical reasons. If this is the case, the wet-only precipitation and TF collectors and SF collectors should all be operated on the same schedule.

3.3.1.6 Sample Handling, Extraction, and Analysis

In the laboratory, pH and conductance should be determined as soon as possible on an aliquot of each sample. The remainder of each sample should be transferred to clean bottles for storage prior to analysis. Storage should be under refrigeration, and analyses done without unnecessary delay. If delay is extended, remeasurement of pH and conductance is warranted.

ORNL will analyze organic acids on selected wet deposition, TF, and SF samples collected at the original sites. Randomly select about one-third of the wet event samples during the growing season, and preserve 25-mL aliquots of rain, TF, and SF with 0.05-mL reagent-grade chloroform per 25-mL sample. Ship the preserved samples to ORNL for analysis by Gran plot titration. Please include data on date, time, tree species, site, rain volume, pH, and conductivity measured for each sample sent.

In general, all wet deposition samples should be analyzed for H^+, K^+, Ca^+, Mg^{2+}, Na^+, NH_4^+, NO_3^-, SO_4^{2-}, Cl^-, PO_4^{3-}, and alkalinity, in addition to pH and conductivity. Alkalinity should be measured on all samples of pH >5 as described in Sect. 5. Total nitrogen and total phosphorus should be measured on all TF and SF samples. Selected wet deposition, TF, and SF samples should also be analyzed for total

dissolved aluminum to determine if this is a significant contributor to the total cation equivalents in any of these sample types. Selected samples of incident precipitation should also be analyzed for total nitrogen and phosphorus to determine the contribution of organic nitrogen and phosphorus. We see this as sort of a screening procedure. Our experience is that dissolved aluminum is negligible in rain, TF, and SF relative to major cations, and that total nitrogen in precipitation consists primarily of NO_3^- plus NH_4^+.

3.3.1.7 Data Manipulation

Ion concentrations should be reported in milliequivalents per liter; element concentrations (total nitrogen, phosphorous) as milligrams per liter; and wet fluxes in milliequivalents per square meter per event, season, year, or other appropriate time period. Conductance should be in micromhos square centimeter. Also recorded should be wet duration and antecedent dry period duration (in hours) and precipitation, SF, and TF amounts (in centimeters).

3.3.2 Dry Deposition (Deposited Coarse Particles)

3.3.2.1 Equipment

Each site should collect deposited particles on inert surfaces by using either an automatic collector such as that developed at ORNL (Figs. 4a, 4b, 4c) or manual operation. The devices are designed to hold two petri dish deposition plates using standard ring clamps. The plates are standard-sized polycarbonate petri dishes (100-mm-OD top and 95-mm-ID bottom; the lower half is the section we expose), which can be

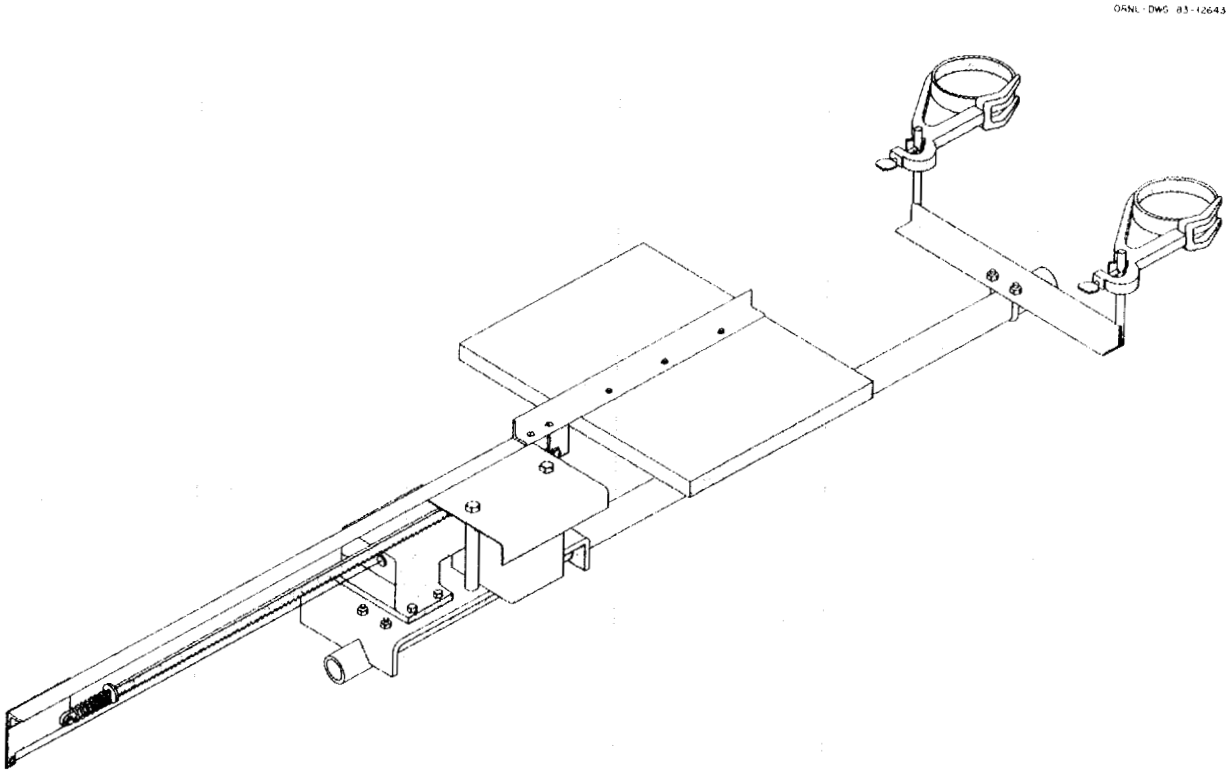

Fig. 4. Apparatus for exposure of dry deposition plates above forest canopy with automatic protection from precipitation.

obtained from Nalgene. Note that the "best" design for dry deposition plates is an unsettled question. Several groups are testing new plate designs in wind tunnels for ultimate use in the field. Because we want to use samplers throughout the deposition tasks of the project which are compatible with those used in other NAPAP networks, it is possible that better designs will be available in the future.

3.3.2.2 Installation

The automatic or manual dry deposition collectors should be located at the top of the tower, approximately 5-10 m above the height of the surrounding canopy (Fig. 2). To avoid contamination, mount the sampler away from overhanging objects such as meteorological equipment and face it into the prevailing wind. The ORNL sampler is designed to attach to aluminum tubing (of standard diameter and thread) which has been clamped horizontally to the tower. The collector is described in Lindberg and Lovett (1985).

The unit uses a wetness sensor to detect any unpredicted raindrops which may occur during a "dry" event and signals the unit to move the rainshield over the plates. When the sensor drys, the shield is retracted. Thus, the sensor must be mounted horizontally on the tower as well, preferably at a higher unobstructed point at the opposite corner from the sampler. The entire unit includes a control box on which is mounted the wet sensor, a junction box, a digital hour meter, and the sampler itself, each designed to operate in all weather conditions when properly mounted. The sampler requires 110-V A/C power

(Table 1). The hour meter will record the plate exposure time only when the shield is retracted to expose the plates. It is a continuous meter requiring a reading at the start and end of each dry sampling period.

3.3.2.3 Preparation

The deposition plates are cleaned prior to use by thorough rinsing in DDW followed by at least 12-h soaking in same. Clean rain sampler buckets with lids work well for this and can hold dozens of plates (both tops and bottoms are cleaned). The plates should be air dried in a laminar flow clean bench prior to storage. Alternatively, they can be dried quickly in a clean oven at up to 50°C. The plates should be stored with the lids in place in sealed plastic bags for transport to the field.

In the field the sampler rain shield and wet sensor should be cleaned with a wet Kimwipe and then dried prior to sampling of a dry event. The operation of the sampler should be tested. This generally consists of checking the travel of the rain shield to be sure that it moves freely. The design allows for this to be tested independently of the rain sensor. The wet sensor should also be tested for operation by using a drop of water. Note that this sensor should be adjusted for maximum sensitivity to wetness since you want it to accomplish rapid protection of the dry plates from any rain, fog, or cloud water. Sensitivity adjustments can be done two ways: turning down the thermostat in the sensor and adjusting a potentiometer in the control

box. The thermostat is easiest to change. By reducing heating of the grid, droplet evaporation is reduced so that any moisture will trigger the rain shield.

3.3.2.4 Operation (Event Sampling)

Event sampling has been discussed above for precipitation and in Tables 2 and 3 for both wet and dry inputs. Prior to a "predicted" period of ~48 h of dry weather, clean plates should be taken to the field and mounted on the sampler using ring clamps as shown in Fig. 4. Two plates should be mounted such that the rain shield will cover both when closed. At this same time, the other dry deposition and air sampling apparatus should also be set up as described below. Record the starting time of the plate exposure on the hour meter. The plate lids should be kept clean in plastic bags until the end of the experiment.

At the end of the experiment, and prior to precipitation, retrieve the plates from the field. Record the value on the hour meter to determine the unshielded exposure period. Examine the plates in the field when initially removed from the sampler to check for any evidence of current or prior moisture (dried rain drops are generally easily detectable). In most cases, this condition will render the data useless, and the samples should be discarded. The plates should be transported to the lab in an upright position, covered by the clean lids, and stored in sealed plastic bags.

3.3.2.5 Sample Extraction and Analysis

The exposed dry deposition plates can be stored in the laboratory sealed in plastic bags for up to 4 weeks, allowing accumulation of several samples for processing and analysis together. The plates should be extracted in a laminar flow bench to prevent contamination. The procedure is as follows: to each plate add 30 mL of DDW and a clean Teflon-coated magnetic stir bar, replace the lid, and stir the solution on a stir plate for 30 min at slow enough speed to prevent splash out of solution. Sufficient solution should then be removed with a pipet into a clean bottle for subsequent analysis (~15-20 mL), being careful to exclude visible particulate matter when the sample is removed from the plate. We use a Teflon-coated stir bar of dimensions 15 by 3 mm and a multistir device which will stir 6 plates at once. The volume of 30 mL is a trade-off between analytical sensitivity and sufficient sample for analysis. If it appears that there is little particle deposition in your area, it may be necessary to decrease the extraction volume in order to increase the solution concentrations for analysis. The smallest volume we have used is 10 mL; less than this does not wet the entire plate. If more solution is needed for analysis, the plates can easily hold 50 mL.

The extract solutions should be analyzed for all of the major ions discussed earlier. Hydrogen ion should be analyzed as pH. If the other analyses are by ion chromatography, 15-20 mL total should be sufficient for extraction and analysis. For low-concentration samples, eliminate the pH analysis to preserve more sample for analysis of other major ions. Extract and analyze clean, unexposed plates to establish a

deposition plate blank for each group of plates analyzed. Typical solution concentrations for plates exposed at the Oak Ridge site are as follows (means for 2 years, average 48-h exposure, and 50-mL extraction volume; concentrations in milligrams per liter, followed by milliequivalent per liter): pH = 5.9, SO_4^{2-} = 0.4 (0.01), NO_3^- = 0.15 (0.002), K^+ = 0.03 (0.001), Ca^{2+} = 0.2 (0.01), NH_4^+ = 0.01 (0.001), Mg^{2+} = 0.04 (0.003), and Cl^- = 0.1 (0.003).

3.3.2.6 Data Manipulation

Ion concentrations should be reported in microequivalents per liter and dry fluxes as microequivalents per square meter per day for event data. Event values should also be summarized as a mean per season (growing and dormant) and year. Also recorded should be dry period dates and duration for each sampled period.

3.3.3 Dry Deposition (Concentrations of Airborne Fine Particles and Vapors)

The ultimate best approach to this task is still under development. Few people agree on the exact equipment design to be used in future dry deposition monitoring networks. However, the deposition community has agreed in principle that the general approach should rely on measurements of air concentration data to infer dry deposition. In this regard, see the recent paper by Hicks et al. (1987), which describes the rationale for this approach. The IFS operates sampling equipment that is compatible with that being used for the NADP/NTN network by National

Oceanic and Atmospheric Administration (NOAA) researchers. The meteorological package described below is taken directly from this design.

3.3.3.1 Equipment

The IFS uses a version of the "filter pack" approach to measure the concentrations of major ions associated with atmospheric particles and the levels of the primary acidifying vapors SO_2 and HNO_3. A schematic of a typical unit available commercially is shown in Fig. 5. The composition is all Teflon, and the device holds three filters in series. Several recent publications have discussed current understanding of potential artifact problems with filter packs in separating aerosol nitrate and HNO_3. It is clear from these often conflicting results that this problem has not yet been resolved (e.g., see Appel et al. 1981).

The air stream to be sampled is drawn through the filter pack by a mass flow-controlled vacuum pump at a flow rate of ~4-5 L/min. These systems have the important advantage of containing a mass flow controller which provides exact control of the flow rate, as well as a continuous readout of the flow during each experiment. The readout of flow rate is recorded by the data logger from the meteorological system. One source of these mass flow controlled pumps is available commercially from Kurz Instruments, Inc.

The types of filters that are used in the filter pack are as follows: Zefluor (Teflon), 2-μm pore size, 47-mm diameter (for suspended particles); Nylasorb (nylon), 1-μm pore size, 47-mm diameter

ORNL-DWG 89M-1739

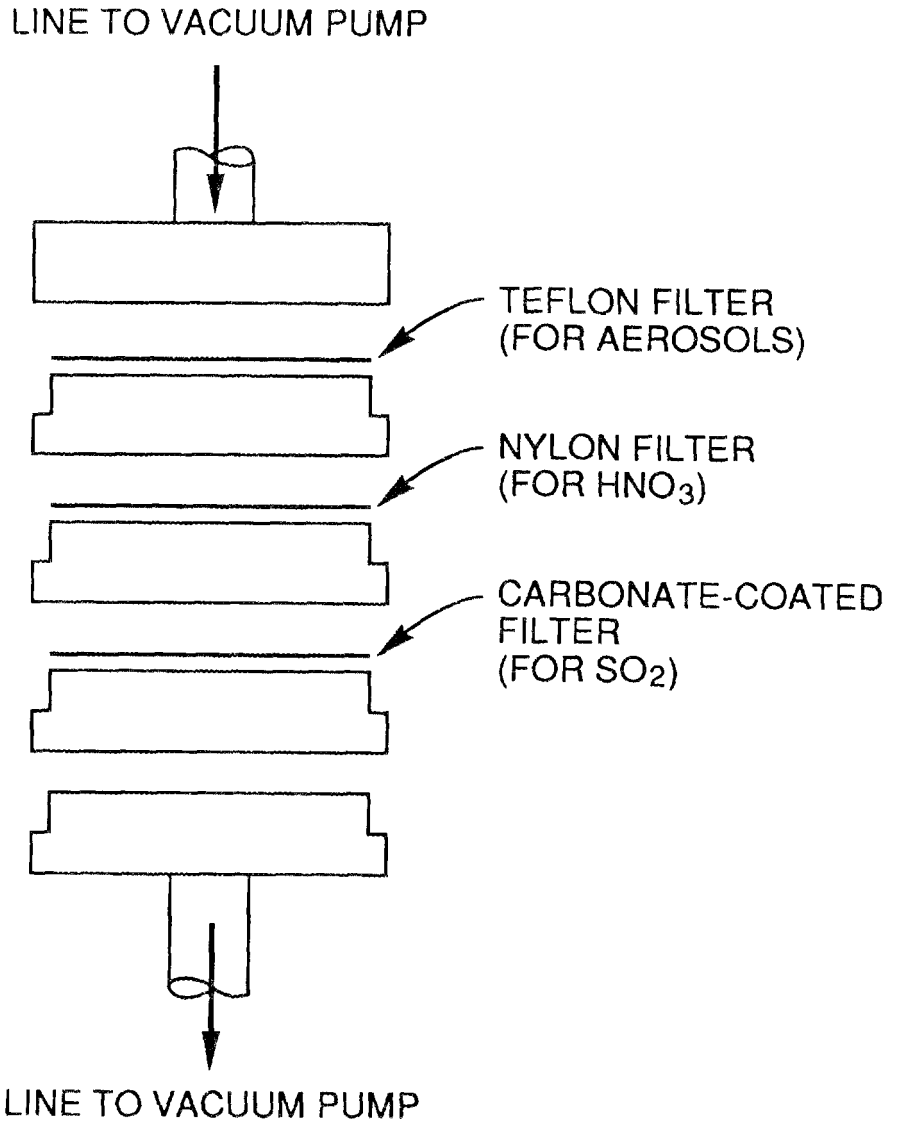

Fig. 5. Schematic of filter pack used for collection of air samples above the canopies at each research site in the Integrated Forest Study (design from J. Womack, Atmospheric Turbulence and Diffusion Division, Oak Ridge, TN).

(for HNO_3 vapor); S&S Fast-flow #2, 47-mm diameter (for SO_2). The filters are available from Membrana Inc. (Zefluor and Nylasorb) and Schleicheer and Schuell Corp. (S&S #2). All Teflon and nylon filters to be used at any one site should be ordered at one time if possible, specifying "all filters of one type must be from the same lot."

3.3.3.2 Preparation

Preparation of the treated filters for SO_2 and cleaning and loading of the filter packs have been described in a U.S. Environmental Protection Agency (EPA)/NOAA document titled, "Protocol for the NOAA Concentration Monitoring Network." With the permission of the author, Tom Ellestadt of EPA, pertinent portions of this document are reproduced here.

Filter preparation: The following are needed:

1. teflon filters (Zefluor, 2-μm pore),
2. Nylon filters (Nylasorb, 1-μm pore), and
3. K_2CO_3-treated S&S Fast-flow #2 filters, prepared as described below.

Teflon and nylon filters require no preparation before loading into the cleaned filter holders. If these filters are stored inside double polyethylene bags and cleaned sealed desiccators (without desiccant), they should remain useful indefinitely. Note that there should be no smoking whenever the filters are being handled. Keep in mind that the nylon filters are designed to absorb HNO_3 vapor and should not be stored in a laboratory where HNO_3 is used.

A fresh batch of carbonate filters should be prepared as needed or when blank values rise above 3 μg of SO_4^{2-} per filter as described below. After preparing a new batch, test several filters to ensure that blanks are below 3 μg SO_4^{2-} per filter. If these filters are stored inside double polyethylene bags and kept in reasonably clean air, they should remain useful indefinitely. For added protection, store the polyethylene bags inside a clean, sealed desiccator (no desiccant necessary). Note that there should be no smoking whenever the filters are being handled, and keep in mind that these filters absorb SO_2 and should not be stored where H_2SO_4 is used.

<u>K_2CO_3 coating solution</u>: Dissolve 250 g anhydrous potassium carbonate in 100 mL glycerol and 500 mL. Dilute to 1 L with more DDW.

<u>Filter-cleaning solution</u>: Dissolve 50 g potassium hydroxide in 1 L DDW.

3.3.3.3 Procedure

1. Place up to 100 S&S Fast-flow #2 filters in 1 L of filter-cleaning solution. Heat at 70-80° for 30 min. Allow to cool. Pour off the filter-cleaning solution.
2. Refill the container with 1 L of DDW, swirl, and pour off the water.
3. In groups of ten filters, rinse each group with 500 mL of DDW in a fritted Buchner funnel with suction.
4. Soak all filters together in sufficient K_2CO_3 coating solution to cover them. In groups of five filters, remove excess solution by aspirating them about ~1 min in the Buchner funnel.

5. Store the filters as they are finished in a clean, sealed polyethylene bag. Analyze randomly selected filters from the new batch for SO_4^{2-}, and use the batch only if the blank is below 3 μg SO_4^{2-} per filter. Store the first polyethylene bag inside another (and, if available, then inside an otherwise empty desiccator).

3.3.3.4 Filter Loading

1. The filter packs must be cleaned before loading. Sonicate (or scrub and rinse repeatedly) for 5 min the disassembled holders in DDW. It may be necessary to wipe obviously soiled parts with a wet Kimwipe and re-sonicate. Triple rinse with deionized water. Dry in a clean oven at a temperature not exceeding 70°C. Reassemble, wearing polyethylene gloves. During reassembly, look for any damaged parts (especially kinked tubing or scratched sealing surfaces), and replace any parts as needed with cleaned parts.
2. The filter holder contains all three filters: the air should pass first through the Teflon filter (into the "suede"-appearing side), then through the nylon filter (into the non-striated side), and then through the carbonate filter (either side up). Be especially careful that the carbonate filter, which is a bit oversized, is properly positioned between the sealing surfaces. Use only clean, flat-end (i.e., nonpointed) Teflon or polypropylene tweezers, and handle the filters only by their edges. If a filter is dropped or otherwise mishandled, throw it away and reload with a new one.
3. Record in a laboratory notebook the lot number of filters used for each sampling period.

4. Tighten the sealing rings with the special wrenches to a snug but reasonable torque. Tighten the connecting tube fittings and caps finger-tight, then snug with a wrench one-eighth of a turn. Label the filter pack with an identification tag that specifies the date of preparation and the site at which that filter pack is to be used.

3.3.3.5 Installation

The filter pack should be located on the meteorological tower at roughly the same level as the dry deposition collector, again away from overhanging objects. A good approach is to mount the device on a post attached to and extending above top platform (see Fig. 2). The device should be mounted with the inlet facing down. Orient the sampler in such a way that air flow (at least for prevailing winds) does not pass through the tower before being sampled. The filter pack should only be mounted on the tower during a dry experiment, being stored in the lab in a cleaned, sealed desiccator between experiments. The device should be attached to the vacuum pump apparatus with weatherproof plastic tubing. (Standard 3/8-in.-OD polypropylene tubing works well.) The pump can be mounted near the sampler on the tower or at the tower base. If it is on the ground, the tubing should be at least 3/8-in.-OD to assist the air flow over the longer distance (100-ft or more). The pump requires a 110-V outlet (Table 1). The output from the mass flow controller should be attached to the meteorological package data logger.

3.3.3.6 Operation

Aerosol and vapor sampling is done on the same dry event basis as described above in the deposited particle section. On initiation of a dry event sampling period, attach the filter pack to the tower, uncap the filter pack, install it in the sampling train, and connect to the vacuum pump system. Check each connection for tightness; snug if necessary. Do not overtighten: these are plastic parts and can be easily damaged. Note the start time and turn on the pump. The flow rate should be adjusted to 4-5 L/min. Your own experience will dictate whether this flow is too slow to allow for sufficient sample to be collected for analysis. The flow rate can be adjusted up to 5-6 L/min and still be regulated by most standard mass flow controllers. The trade-off here is that too fast a rate will clog the filters at the "dirtier" sites. Hence, each site may have a different optimum sampling rate, determined after some experimentation. Check the sampler daily for integrity, flow rate, etc. Note any unusual conditions in writing and attach to record sheet. Recalibrate the mass flow controller quarterly, using a recognized standard (see Sect. 6.1).

3.3.3.7 Sampling, Handling, Extraction, and Analysis

In background aerosol sampling a little contamination goes a long way; hence, scrupulous cleanliness is necessary when handling these filters. In addition, the nylon and the treated SO_2 filters are designed to absorb SO_2 and HNO_3 vapor. Thus, handling and storage of these filters in a chemistry lab where strong mineral acids are commonly used will lead to high filter blanks. Do all filter handling and

extractions in a laminar flow clean bench. As described below, extract unexposed filters of each kind approximately monthly to establish good working blank values for both the filters and the extract solutions.

3.3.3.8 Unloading and Analysis

Upon completion of a dry experiment, remove the filter pack, check the filter for signs of contamination, cap the ends, and store it in a clean plastic bag for return to your laboratory. Note the total sampling time of the experiment, read the mass flow data from the data logger, and shut down the pump. Check the condition of the filter pack for normalcy. If a filter holder's exterior is unusually dirty, take precautions to avoid contamination of the filters and the clean bench.

1. Unload the three filters into separate, labeled polyethylene or polypropylene extraction vials or bottles (20- to 50-mL volume in size) using clean tweezers and handling only the edges. In handling the Teflon filter, the particle-laden side should be folded inward so that particles are not scraped off by the lip of the vial. If any insects or pieces of biological debris are visible on the filter, carefully pick them off with tweezers. Record any problems (e.g., filter punctured, filter not seated between sealing surfaces) or any handling errors.
2. The mass of the sample collected is determined by the atmospheric concentrations, which may vary greatly, and by the duration of sampling and pump flow rate. A 20-mL initial extraction is suggested, followed by a suitable dilution of the initial extract (e.g., try 2:1 or 3:1 using 1 mL of the original extract). Analyze

this diluted extract in the first rerun. If it is too dilute, analyze the initial extract directly. Only experience will help determine the optimum conditions for extraction and analysis. Sampling at 4 L/min for ~48 h filters ~11 m^3 of air. "Expected" quantities of material on each filter are as follows (typical for the Oak Ridge site): 80 μg of SO_4^{2-}, 1 μg of K^+, 10 μg of Ca^{2+}, 14 μg of NH_4^+, all on the Teflon filter; 20 μg of NO_3^-, divided between the Teflon and nylon filters (primarily on nylon); and 150 μg of SO_2 as SO_4^{2-} on the carbonate filter.

3. Extract the Teflon filter with DDW, and extract the nylon filter with reagent-grade 0.1 N NaOH or IC eluent at room temperature. (Check the solution for its NO_3^- blank prior to starting extractions.) Sonicate (or shake vigorously) for 30 min. Ensure that the filters are completely immersed in extraction fluid for the entire period of extraction. Teflon filters may have to be held under by using short lengths of cleaned plastic tubing. Soak in extraction solution for 24 h. Sonicate for 15 min in same solution.

4. Extract the carbonate filters by adding the chosen quantity of DDW, add one drop of fresh 30% hydrogen peroxide for each 20 mL of water, and then sonicate (or shake vigorously) for 30 min. Again, ensure that the filter is immersed in extraction fluid for the entire period of extraction and that the extraction is done at room temperature. Soak in extraction solution 24 h. Sonicate for 15 min in same solution.

5. Analyze as follows:

type filter	ions
Teflon	All major ions (including pH)
Nylon	NO_3^- and SO_4^{2-}*
Carbonate	SO_4^{2-}

6. All extract solutions should be analyzed within 2 d of the extraction. If impossible, either wait to extract or store the extract solutions in a refrigerator at about 3°C.

7. If you are using an ion chromatograph, some effort may be required to get suitable results from the carbonate filters. It may be necessary to do the carbonate analyses in water, not IC eluent, to avoid complicating baseline changes from the carbonate and peroxide. EPA scientists have found that response is reduced about 14%, based on sulfate spikes of actual carbonate filters. If you find this to be occurring, derive your own correction factor based on spiked filter tests.

---

*There has been some indication that small amounts of SO_2 can sorb onto the nylon filter. If this is found to occur to a significant extent (by analysis of selected nylon filters for SO_4^{2-}), then all nylon filters should be routinely checked for SO_4^{2-}. The SO_4^{2-} analysis on this filter (after blank convection) is a measure of some fraction of the SO_2 sampled by the filter pack; it should be reported separately as nylon-SO_2 in micrograms of SO_2 per cubic meter and added to that from the carbonate filter to yield total SO_2.

8. There are some problems with ion chromatography analyses of the treated SO_2 and also the nylon filters due to matrix effects. Dilution of the extract will help and is the standard method used by the ORNL laboratory. The degree of dilution depends on several factors. Experience suggests that the SO_2 filter extracts can generally be diluted by 5 to 10 times, allowing detection of the SO_4^{2-} while overcoming the matrix effect. Each site should routinely run spikes on all SO_2 and nylon filter extracts to quantify the matrix effect.

3.3.3.9 Data Manipulation

Ion concentrations in extract solutions should be reported as described earlier. Air concentrations should be reported as follows: (1) particle filter (Zefluor Teflon, or front filter in the pack): airborne particle concentrations of all major ions in micrograms of the ion per cubic meter of air sampled during the period (refer to these values as "suspended particle sulfate," for example); (2) nitric acid vapor filter (Nylasorb nylon filter, or the second in the series): airborne HNO_3 vapor concentration in micrograms per cubic meter of HNO_3; (3) SO_2 filter (S&S #2 carbonate-treated filter, or third one in the series): airborne SO_2 concentration in micrograms per cubic meter (as SO_2, not SO_4^{2-}). Other variables to be recorded for the dry experiments are total exposure and filtering time, mean air flow rate through the filter pack (from data logger), and total air volume sampled (mean flow rate in liters per minute times total sampling duration in hours times 0.06 to give flow in cubic meters).

To calculate the appropriate air concentration, proceed as follows:

1. Apply appropriate blank corrections for each type of filter. Generally, for any one type of filter, use the mean of the operational blank of the current sampling period and the previous and following periods (total of three).
2. Validate the mass flow rates and sampling times.
3. Calculate the mass of ion on each filter (e.g., micrograms per milliliter concentration times milliliter extract solution used).
4. Reduce the data by the following equations:

a. $$[HNO_3] = \frac{NO_3^- \text{ nylon}}{\text{flow rate} * \text{time}} * (1.02)$$

b. $$[\text{particle } NO_3^-] = \frac{NO_3^- \text{ Teflon}}{\text{flow rate} * \text{time}}$$

c. $$[\text{total nitrate}] = \frac{(NO_3^-) \text{ Teflon} + (NO_3^-) \text{ nylon}}{\text{flow rate} * \text{time}}$$

d. $$[\text{particle sulfate}] = \frac{(SO_4^{2-}) \text{ Teflon}}{\text{flow rate} * \text{time}}$$

e. $$[SO_2] = \frac{(SO_4^{2-}) \text{ carbonate} * (0.667)}{\text{flow rate} * \text{time}}$$

f. $$[\text{particle } NH_4^+, Ca^{2+}, \text{ or } Cl^-, \text{ etc.}] = \frac{(NH_4^+, Ca^{2+}, \text{ or } Cl^-, \text{ etc.}) \text{ Teflon}}{\text{flow rate} * \text{time}}$$

3.4 CLOUD AND FOG DEPOSITION

Deposition of cloud and fog water (hereafter referred to collectively as cloud/fog) is expected to vary in importance from site to site. Our goal is to obtain a reliable set of observations of important parameters in order to estimate the importance of cloud/fog water input at each site. We expect that procedures will be modified as experience is gained during the course of this and other recent projects. Recent publications on cloud/fog sampling include Lovett et al. (1982) and Lovett (1984).

Estimation of water and ion deposition via cloud/fog requires measurements of fog water chemistry, wind speed, cloud/fog duration, cloud/fog LWC (grams of water per cubic meter of air), and droplet size distribution. This section describes measurement procedures for fog chemistry, LWC, and duration. Measurement of wind speed is described in the section on meteorological observations. Measurement of droplet size distribution is a complex task requiring specialized instrumentation currently beyond our capabilities in this project. We will arrange for researchers experienced in these measurements to visit each site and perform representative measurements. Individual site coordinators are encouraged to explore the possibility of having such measurements also made by capable meteorologists at their home institutions.

3.4.1 Equipment

Collectors for cloud/fog water will be of two types. Sites with consistently high winds (generally high-elevation sites exposed to cloud impaction) will use passive collectors (collection by ambient wind

impaction on Teflon lines), and other sites (low-elevation sites exposed to frequent radiation fogs) will use active collectors (collection by mechanical suction through a droplet filtration device).

3.4.2 Sampling Strategy and Procedure

Samples will be taken in cloud/fog events in which no precipitation is occurring to avoid contamination by rain. Select such events randomly such that at least 20% of the total nonprecipitating cloud/fog events at each site are sampled. Arrange for a field observer to note the presence or absence of cloud/fog at frequent intervals (i.e., several times daily) in order to establish a record of cloud/fog duration at the site. Several groups are attempting to develop a sensor to collect these data automatically. Some will soon be available commercially.

Prior to each sampling event, thoroughly clean all parts of the collector that contact the cloud/fog water. Cleaning should include an overnight soak in DDW followed by repeated rinses with DDW. Store the cleaned parts of the collector in a clean plastic bag while not in use and when in transit to the collection site.

Take the collector to the sampling site at the start of each cloud/fog event to be sampled. Active collectors should be operated above the canopy on the meteorological tower. Passive collectors should be mounted on the tower directly adjacent to the cup anemometer (Fig. 2). For both types of collectors, the duration of the sampling interval should be carefully timed. The duration of the sampling period will vary with conditions of wind speed and cloud LWC, but the interval

should be long enough to get a liquid sample sufficient for total chemical analysis (about 25-50 mL). During extended cloud/fog events, several samples should be taken throughout the event and analyzed separately if possible. For the passive samplers, the start and end of each sampling period should be synchronized with the recording interval of the meteorological data logger to ensure compatibility between the wind speed and cloud chemistry data. After the end of the sampling period, query the data logger for the relevant wind speed data and record them in a notebook to avoid possible losses and delays from the standard meteorological data retrieval system. After the sampling is completed, return the cloud/fog collector to the laboratory for cleaning in DDW and storage as described above.

3.4.3 Sample Handling

After collection, cloud/fog water samples should be handled exactly like rain samples (see earlier section). Be certain that the volume or mass of each collected sample is measured and noted.

3.4.4 Data Manipulation

Ion concentrations in all cloud/fog samples from one event should be averaged (weighted by LWC) for an event mean. Note if any consistent trends are evident in sequential within-event samples, if collected.

For an active collector, calculate the LWC of the fog as

$$\text{LWC (g m}^{-3}) = \frac{\text{sample mass}}{\text{flow rate (m}^3\text{ min}^{-1}) * \text{sample interval (min)}}$$

Flow rates for the active sampler vacuum pump are supplied with the pump.

For the passive collector, calculate the fog LWC as

$$\text{LWC } (g\ m^{-3}) = \frac{\text{Sample mass}}{\text{WS } (m\ s^{-1}) * \text{Area } (m^2) * \text{CE} * \text{Time (min)} * 60\ s\ min^{-1}},$$

where WS = the average wind speed over the sampling interval,

AREA = the projected area of the collector,

CE = the collection efficiency of the collection lines, and

TIME = the duration of the sampling interval.

The capture efficiency of the collection lines and the projected area of the collector must be determined by laboratory studies at each site (e.g., Lovett, 1984). Annual reports should include means and standard deviations of cloud/fog chemistry and LWC, total cloud/fog duration, and number of cloud/fog events on an annual and seasonal basis. In addition, for each cloud/fog event, chemistry, LWC, duration, and wind speed during the event should be reported.

3.5 METEOROLOGICAL MEASUREMENTS

Background meteorological measurements are made at all sites for the purpose of (1) parameterizing the calculations of deposition velocity for particles, gases, and fog droplets; (2) maintaining compatibility with the dry deposition monitoring networks being established as part of NAPAP; (3) aiding the interpretation of plant responses to ozone and other pollutants; and (4) permitting the calculation of evapotranspiration for hydrologic flow estimates. Our goal is to establish and maintain a set of instruments to provide

reliable background meteorological data with minimum maintenance required from site operators.

3.5.1 Equipment

A reliable, low-power-consumption system is available from Campbell Scientific, Inc., and is detailed in Table 4. The system includes sensors for wind speed, wind direction, relative humidity, temperature, solar radiation, and precipitation. The maintenance and recalibration of this equipment is the responsibility of each site operator.

3.5.2 Installation and Operation

The sensors for wind speed, wind direction, solar radiation, temperature, and relative humidity should be located on the meteorological tower, 2-5 m above the tallest nearby tree (Fig. 2). Use a level to ensure that the cup anemometer shaft is vertical, and that the radiation and wind direction sensors are horizontal. The rain gage should be located in the nearby clearing adjacent to the wet deposition collector and the ozone data logger (see below). The meteorological system data logger should be mounted in a weatherproof case at the base of the tower.

For protection of your equipment, make sure that your tower and data logger are lightning protected. An example of a lightning protection system for a tower is shown in Figs. 6 and 7. The electronics of the data logger can be protected by installing varistors (GE Model V87A2 or equivalent) between the high and low terminals of each channel input, except the relative humidity channels, and also

Table 4. Meteorological system components[a]

Item Model #	Description
CR 21	Data logger
SM16	Data storage module
201	Temperature and relative humidity sensors
041	Temperature and relative humidity shelter
LI 200S	Silicon pyranometer
LI 2003S	Pyranometer base
RG 2501	Tipping bucket rain gage
014A	Cup anemometer
024A	Wind vane
019	Anemometer
015	Pyranometer mount
021	Enclosure
RC235	Cassette recorder (modified)
SC235	CR21 Cassette interface
PC201	Interface and software for PC

[a]One supplier is Campbell Scientific, Inc.

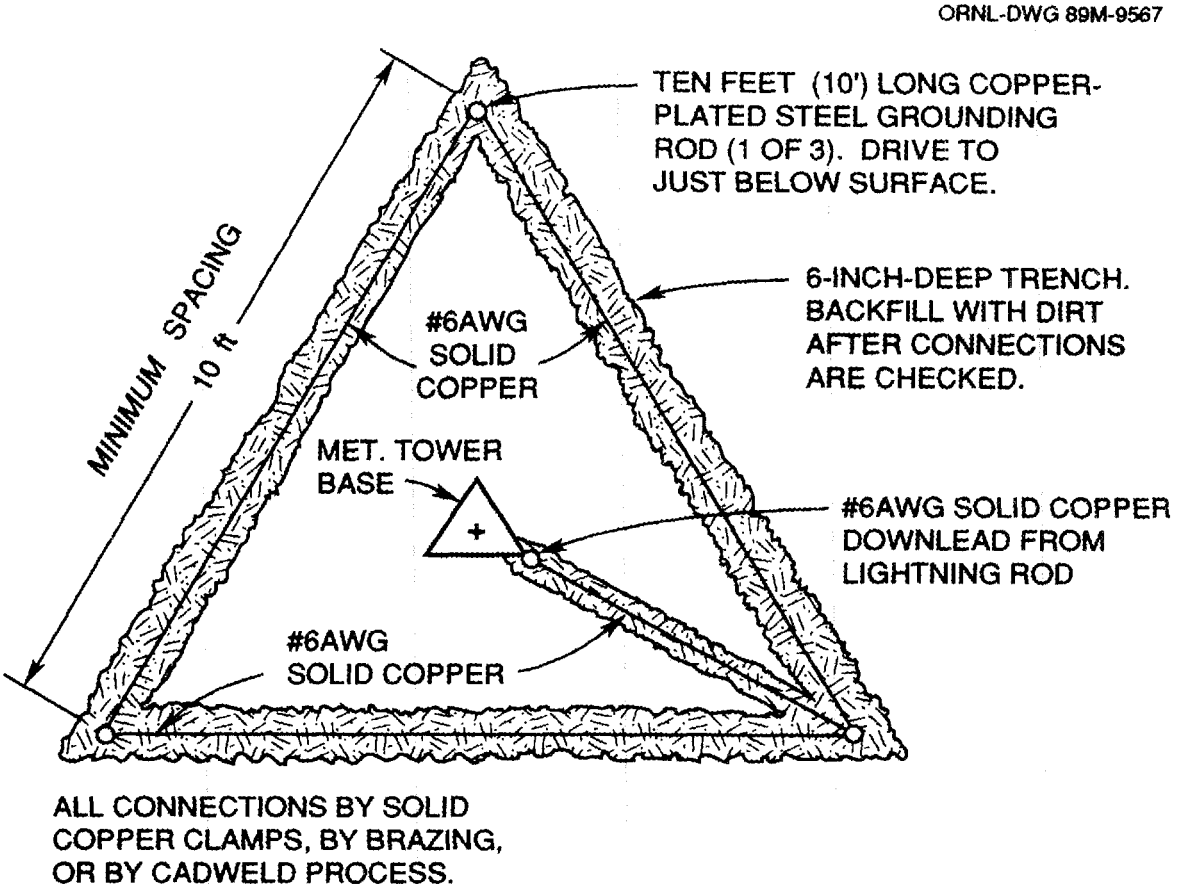

Fig. 6. Schematic of lightening protection with lightening rod and downlead for meteorological tower (design from R. Hosker, Atmospheric Turbulence and Diffusion Division, Oak Ridge, TN).

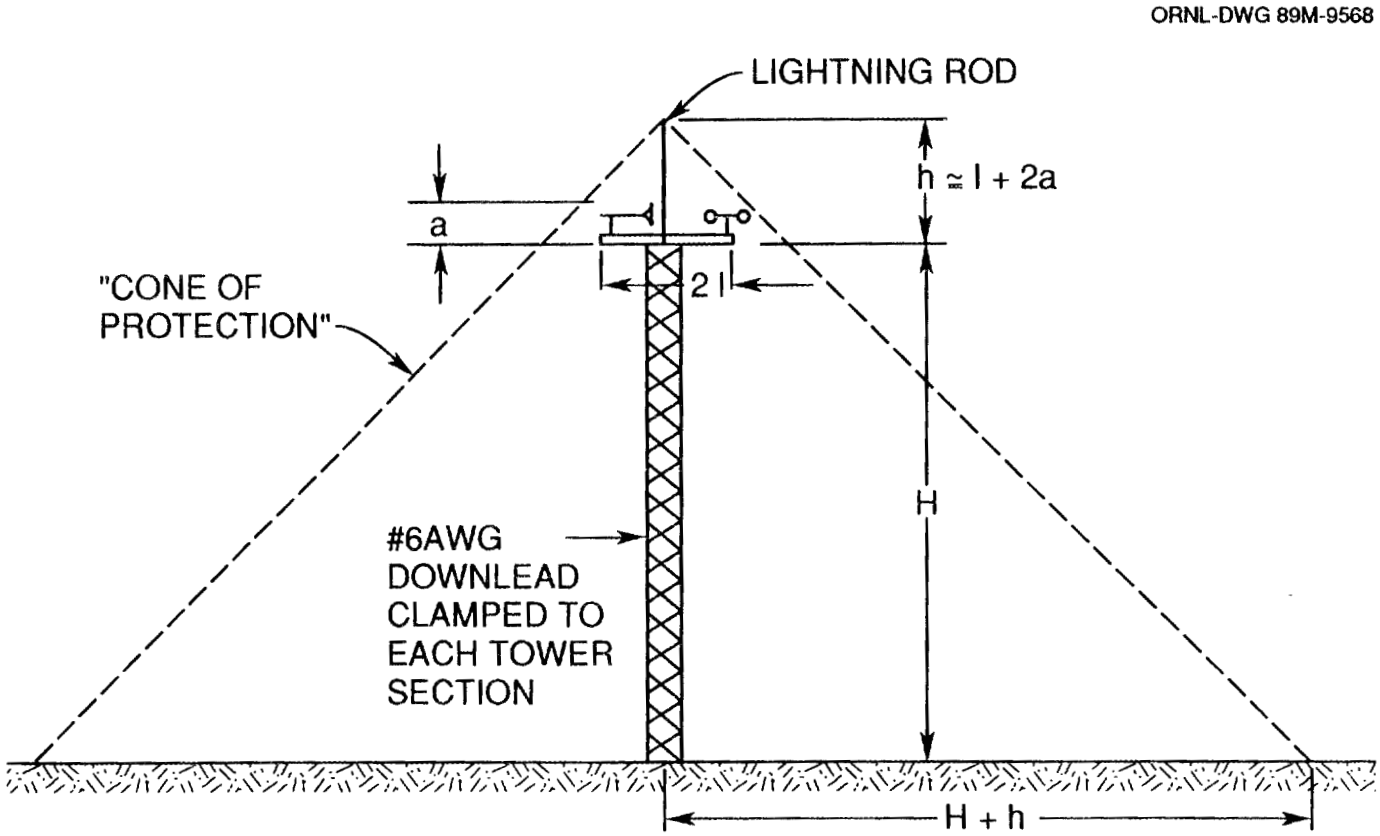

Fig. 7. Schematic of lightening protection as plan view of grounding rods and connecting "belt" surrounding meteorological tower base (design from R. Hosker, Atmospheric Turbulence and Diffusion Division, Oak Ridge, TN).

between the channel 7 "low" terminal and the system's earth ground. This protects the logger against surges caused by nearby lightning strikes but would not protect against a direct strike. Instructions for hooking up the sensors to the data logger are given in the instruction manual supplied by Campbell Scientific.

The system is designed to provide background meteorological data and can be run continuously. During periods of freezing rain or extremely high winds, you may wish to remove the sensors to protect them. The most crucial periods for operation of the equipment are during dry deposition/wet deposition events that are sampled for chemistry. Program the data logger to record data at 1-h time intervals (based on either 10-s or 60-s scan times). For general background monitoring, hourly intervals are sufficient, but for periods in which short-term, sequential chemical sampling is taking place (i.e., precipitation or cloud/fog water sampling), 15-min intervals may be more useful. A large number of output parameters are available from the internal programs of the data logger, but be sure to include the following in your output record: mean wind speed, standard deviation of wind speed, maximum wind gust for period, mean wind direction, standard deviation of wind direction (determined by the wind vector program available with the data logger), total solar radiation, average relative humidity, total rainfall, and average rainfall rate. For periods in which air concentration sampling is occurring, the average and standard deviation of the flow from the pump's mass flow controller (see section on dry deposition) should also be recorded.

Data are recorded in the system's RAM memory module. At approximately biweekly to monthly intervals, site operators should dump the data onto cassette tape and return it to the laboratory for processing. Instructions for this procedure are supplied by Campbell Scientific. If the weather is cold during this procedure, keep the tape recorder warm (e.g., inside your coat) to permit the tape drives to turn at the proper speed.

Monthly battery replacement in the data logger is encouraged to avoid loss of data. Use leakproof alkaline batteries. During the battery-switching operation, loss of stored programs can be avoided if an external power supply (such as a gel cell) is attached to the data logger as described in the instruction manual.

3.5.3 Data Manipulation

Data should be read into a personal computer by using an interface system such as the Campbell Scientific PC201. All data should be screened for anomalous values and stored for manipulation at a later date. This can easily be done with a Lotus spreadsheet format. (A version with macros is available from ORNL.) Annual and seasonal (growing/dormant season) averages should be calculated for wind speed, wind direction, temperature, relative humidity, daylight hours, daily maximum solar radiation, and sigma theta (standard deviation of wind direction). Total rainfall amount, duration, and frequency distribution of wind direction should also be calculated on annual and seasonal time scales. For each dry deposition event that is sampled, the appropriate hourly mean meteorological data should be made into a separate PRN file

from the Lotus spreadsheet of the monthly data. These files are then used as input to a dry deposition velocity model to determine the hourly mean deposition velocities for the duration of each experiment (Hicks et al. 1987)(see Sect. 7.1).

In addition, for each precipitation event, calculate means, totals, and frequency distributions of parameters as listed above for the antecedent dry period and for the event itself. Record start and end times for all events and their antecedent periods. Annual, seasonal, and event data should be included in the annual report.

4. OZONE MONITORING PROTOCOLS

4.1 RATIONALE

Continuous monitoring of ozone concentrations is being performed at all locations for the purpose of providing a record of ozone air quality on a site-specific basis. While protocol recommendations for monitoring, data storage, and data analysis are offered, the individual site contractors are encouraged to ensure (1) the quality of the data, (2) continuous operation of the instruments, and (3) a method of data storage. Site-specific data analysis is recommended but is at the discretion of the site contractor.

4.1.1 Equipment

It is recommended that each location purchase an ozone analyzer designed for ambient air monitoring (e.g., U.V. Absorption Ozone Analyzer: Model 1008-AH Ozone Analyzer, Dasibi Environmental Corporation) and a corresponding system for data acquisition (e.g., Model SC-405 Data Acquisition System, SumX Corporation). The selection should be guided by various factors including performance record, durability, ease of operation, flexibility in serving multiple tasks, stability, sensitivity, and unique data storage and control features.

4.1.2 Installation

The ozone analyzer and the data acquisition unit should be housed in a shed in which the temperature is maintained between 20-30°C. This range is important for it defines the conditions under which most ambient ozone analyzers achieve EPA performance criteria. The power

requirements for the shed are a line voltage range of 105-125 VAC. The shed should be located in a clearing in which either of the two following criteria is met: (1) the distance between the shed and the nearest edge of the forest is not less than 6 times the height of the canopy or (2) the angle between the ground at the shed and the top of the nearest canopy is $\leq 45°$. This operating protocol is offered to minimize the influence of the forest canopy on ambient levels of ozone.

The ozone analyzer should sample ambient air through a Teflon sample line (~0.60-cm inside diameter) which extends above the shed to a location approximately 1 m vertically above the shed. FEP (fluorinated ethylene propylene) is preferable to TFE (tetrafluoroethylene), because the latter has a greater tendency to adsorb trace gases and subsequently to degas them at a later time as a function of temperature or concentration. The sample line should be fitted with a filter cartridge to prevent dirt and debris from entering the monitor. In those systems using short sample lines as outlined above (i.e., 1 m above the shed), the filter cartridge should be placed immediately behind the orifice of the inlet line (not inside the shed). This will prevent particle deposition inside the Teflon sample line, which is a potential source of in-line scavenging for ozone. The orifice of the sample line should be fitted with an inverted Teflon funnel and positioned to prevent inadvertent uptake of rain or mist. The entire length of the sample line should be continuously heated by using thermostatically controlled heating tapes. One convenient means of achieving this temperature regime is to pull the entire wrapped Teflon line through a section of PVC pipe configured to run from the shed to the sample location. The

temperature control should be thermostatically adjusted to maintain the temperature in the sample line above the dew point, which will vary among locations and seasons of the year. Thermostatically regulated heating tapes that maintain a temperature range of 35-37°C are recommended. The most economical methods of achieving this temperature range are to purchase low-wattage heating tapes and an inexpensive voltage controller (e.g., that made by Cole Parmer Instrument Company). The most sophisticated method of heating the sample lines is a variable-wattage system that provides differential heating at different points along the sample line to maintain a set point (e.g., 37°C) (Parker Parflex Division in Ohio, 216/296-2871; Heat/Line Products, Technical Heaters, Inc., in California, 213/361-7185). Under no condition should high-temperature heating tapes be installed, because sample integrity will be compromised.

Other methods of sampling ozone (e.g., above canopy techniques) are at the discretion of the site contractor. Alternatives must recognize (1) the potential for inadvertent modification of the ozone concentration through the sample system and (2) the difficulty in achieving a valid calibration. Irrespective of the sampling configuration/method, the maximum residence time of the sample in the Teflon sample line should be <10 s to maintain sample integrity. Assuming a sample line inside diameter of 0.60 cm, a sample pump rate of 2 L/min, and a sample line length of 1 m, the residence time of the air sample in the Teflon line is approximately 1 s. This indicates that the maximum upper limit length of the sample line is 10 m assuming all of the above specifications are met. Other instruments and sampling

protocols will have different features, but all should achieve a residence time of <10 s. It is important that long sample lines provide a particle filter at the sample inlet (above canopy) to exclude particles (dust, pollen, etc.). As with the shorter sample lines, it is encouraged that a heating tape be installed to prevent in-line condensation of water vapor. This recommendation will be particularly important during warm summer periods of stagnant air (potentially high ozone concentrations) in which the relative humidity is >85% (the periods of most interest in terms of vegetation effects). When the warm above-canopy air is pulled down below the canopy and the Teflon walls are cooled to temperatures of the trunk space, deposition of water vapor will occur to the sample line walls. This may constitute a sink for ozone. There are data from air sampling along 30-m lengths of Teflon line (without filter or heat tape) to indicate scavenging for ozone ≤20%. Because the significance of scavenging will be environment specific, a constant scavenging ratio based on a single calibration should not be assumed.

Routine maintenance of most ambient ozone analyzers is minimal, assuming the operation is continuous and stable. The site contractor should check the filter cartridge on a monthly basis to ensure that it is not clogged with dirt and debris. If either the Teflon sample line or the filter becomes clogged or visibly covered with dirt/particles, it should be replaced rather than cleaned.

4.1.3 Operation

The individual site contractor should ensure day-to-day operation of the ozone analyzer, data acquisition system, and the shed. This process includes any scheduled or emergency maintenance. Specific details regarding the routine maintenance of the analyzer or acquisition unit are contained in the respective instrument manuals provided by the manufacturer.

Calibration of the ozone analyzer should be done twice annually, once in the early spring (calibration) and late summer or early fall (audit). The calibration will be performed through the entire system (sample line plus analyzer) with standards being input at the sample orifice. Any deviation of the instrument's performance from acceptable limits based on the multipoint calibration curve should be recorded by the site contractor. Any recalibration of the instrument during the course of the season is not recommended unless (1) the site contractor can verify the National Bureau of Standards (NBS) traceable nature of the standards and (2) recalibration is warranted. Recalibration should be done any time the instrument is repaired. If the zero and span checks of the analyzer indicate a drift in excess of 10%, the site contractor should make note of the problem in a log book. Excursions in excess of 20% require identification of the problem, repair, and recalibration.

4.1.4 Data Acquisition

The essential needs of the data acquisition system are to provide a continuous logging of ozone concentrations in a form suitable for

storage and retrieval. At the discretion of the contractor, the data acquisition system should be programmed to provide basic summary statistics as outlined below. At a minimum, 75% of the total possible observations during a sampling period should be present in order to achieve completeness requirements. If the number of valid data points is less than that percentage, summary statistics should not be calculated. The site operator is encouraged to check for data validation. In particular, the operator should be attentive to the following anomalies in the air quality data:

1. unusually high or low values for ozone concentration,
2. rapid excursions, either upscale or downscale,
3. unusually repetitious or monotonic readings over time,
4. unusually cyclic readings whose frequency and amplitude are monotonous and suggestive of electrical voltage problems,
5. unusually high or low dispersion statistics, and
6. summary statistics that are calculated without achievement of the 75% completeness requirements.

Because many data acquisition systems are insensitive to outliers and malfunctions, the site operator should be attentive to suspicious or incomplete data.

4.1.5 Data Analysis

Site-specific data analysis is at the discretion of the individual contractor. If data reduction is pursued, it is recommended that a 1-h

averaging time be used, assuming that the 75% completeness requirement is met for each 1-h period. The 1-h mean ozone concentration and the associated dispersion statistics (e.g., range, standard error of the mean) should be recorded for each hour of the 24-h interval. These 1-h averages should be the raw data for characterizations of ozone exposure dynamics as a function of time of day/night and month/season of the year. If capabilities and interest exist, attention should focus on characterizing ozone exposure dynamics during the extended periods of elevated ozone concentrations (1-5 d episodes) and the subsequent respite periods. Analysis of the ozone aerometric data across all sites will be initiated at ORNL in cooperation with the site contractors.

5. SOIL CHEMISTRY AND NUTRIENT CYCLE MONITORING PROTOCOLS

5.1 SAMPLING PROTOCOLS FOR SOILS AND NUTRIENT CYCLING WORK

5.1.1 Plot Size and Vegetation Inventory

Plot configuration as shown in Fig. 1 is suggested but not mandatory. Other plot configurations may be used as appropriate for the site or to take advantage of older inventories. Vegetation should be inventoried at 2- to 3-year intervals to obtain estimates of biomass increment.

5.1.2 Vegetation Sampling

Foliage, branch, bole (bark and wood), and root samples are taken for all major species. Foliage should be sampled by age class (old and new foliage, at a minimum, except in deciduous forests) at two levels in the crown if possible. The preferable method of branch and bole sampling is to harvest trees and take either entire cross sections (cookie) or pie-shaped sections of wood to obtain correct proportions of various ages of wood and bark. Where it is not possible to harvest trees, large increment cores can be used to take samples of wood and bark. In the latter case, it will be necessary to estimate the proportions or weights of heartwood, sapwood, and bark in order to properly weight nutrient concentrations in calculating biomass nutrient content. This can be done by obtaining thicknesses and specific gravities of heartwood, sapwood, and bark and by calculating proportions based upon some geometric model (e.g., a cone).

5.1.3 Litter and Soil Sampling

Several methods can be used for soil forest floor sampling. One option is to use a grid system in which a square plot is established within which >100 subplots are delineated (Fig. 2). Six or more samples are taken at random within this plot (by horizon, using lysimeter pit data as depth guidelines for sampling) at 5- to 10-year intervals. Another option that may be more feasible and desirable in extremely heterogeneous sites (such as bouldery sites) is to establish random polar coordinates, monument each point, and sample 0.5-2 m in a given direction (due north, south, etc.) from the monumented point at 5- to 10-year intervals (Fig. 3). At each point, the following sampling scheme is recommended:

Forest floor wood. Within a 3-m radius of the sampling point, measure the length and end diameters of all woody material >5 cm in diameter falling within the radius. Assign arbitrary decay classes (e.g., classes 1-4), and estimate the amount of cull on each log (i.e., the amount of volume missing from a perfect truncated cone). Subsample from each decay class for specific gravity and nutrient analyses. Use truncated cone model for volume estimation. If feasible, an alternative method is to cut, weigh, and replace all wood within a given subplot area, subsampling for moisture content and nutrient analyses.

Forest floor. Within a template of known area, remove small wood (<5 cm in diameter), Oi, Oe, and/or Oa. Dry, weigh, and subsample for nutrient analyses.

Soils. If possible, sample with bucket auger by horizon, using profile descriptions from lysimeter plots as a guideline. These samples

should be analyzed along with those obtained in future samplings to eliminate laboratory bias in determining long-term changes. Alternative sampling methods may have to be used in bouldery or otherwise difficult-to-auger soils (e.g., expand the plot to 20 by 20 m and use 2 by 2-m subplots, digging a hole in each subplot).

These sampling schemes can be used to monitor long-term changes in litter and soils and can also serve to characterize the spatial variability of the plots. Careful documentation and storage of samples are critical to determining long-term soil changes.

5.1.4 Soil Sampling for Lab Studies

After digging lysimeter pits, describe the soil profile as per Soil Conservation Service Procedures (USDA 1972) noting also parent material (and form, elevation, and slope). Sample 500 g of soil and 10-100 g of coarse fragments for laboratory studies. Analyze <2-mm fraction along with soils from 10 by 10-m plot.

5.1.5 Solution Sampling

All solutions are collected monthly or collected weekly and bulked into monthly samples (proportional to volume) for analyses.

Bulk precipitation, throughfall. Plastic bottles with funnels or troughs are used. Screens on funnels or troughs are the same size as those in litterfall or trough collectors. If plugs rather than screens are used, funnels or troughs must be cleaned at least weekly. During winter, throughfall funnels are replaced with snowmelt collectors for

input to the forest floor. A snowmelt collector consists of a pan or bucket with a drain that rests on the forest floor. It is assumed that the combination of snow, ice, and rain that enters and drains from the snowmelt collector is representative of that which enters the forest floor.

Stemflow. In forests with a large woody understory component, it is convenient to fit SF collars on all trees in 2-m-diam subplots, bulking into one container per subplot (minimum of three subplots per 0.1-ha plot). Where only large overstory trees dominate, single trees may be selected for SF collars (minimum of 3 per 0.1-ha plot).

Soil solution sampling. Use tension lysimeters set to 10-kPa constant tension. Collection bottles must be placed at the same height relative to plates at all depths (to avoid adding or subtracting tension by water columns in the collection line) (Fig. 4). Bottles may be at variable depths below plate if collection tubing is large enough that in-line water columns do not form. Alundum- or ceramic-type lysimeters can be used unless soil solution pH is expected to go below 4.3, in which case glass plates or other non-Al^{3+} containing plates are used to avoid Al^{3+} release from plates. Four replicates each in litter (beneath O2), A/B horizon boundary, and depth of rooting (if possible) per 0.1-ha plot are used. Tension-free lysimeters may be used as backup system or in thin litter layers subject to drastic wetting/drying episodes (making tension lysimetry difficult).

5.1.6 Litterfall

Collectors of known area are lined with some screen as on precipitation and throughfall. Collect at least monthly, but bulk into two collection periods per year (after oven drying at 60°C) for chemical analyses. Separate into at least leaf and nonleaf tissue at a minimum of four replicates per plot.

5.2 SOIL METHODS

5.2.1 Cation Exchange Capacity and Exchange Cations

By using an automatic mechanical vacuum extractor, 2.5 g of soil is leached for 12 h by 50 mL of 1 N NH_4Cl or NH_4NO_3. Include a blank (no soil) extraction. Leachate is analyzed for Ca^{2+}, K^+, Mg^{2+}, Na^+, and Al^{3+}. Soils are then leached 1 h with ethyl alcohol (rinse for interstitial NH_4Cl or NH_4NO_3) and then extracted with 1 N KCl for 12 h. The last leachate is analyzed for NH_4^+ [to get effective cation exchange capacity (CEC)]. Sum of cations CEC is obtained from the sum of exchangeable Al^{3+}, Ca^{2+}, Mg^{2+}, K^+, and Na^+ from the first extraction.

Extractable phosphorus. Soils are extracted for phosphorus by shaking 5 g of soil in 50 mL of solution containing 0.03 N NH_4F plus 0.025 N HCl (Olson and Sommers, 1982) for 20 min. Phosphate in the extractant was analyzed on a Technicon AutoAnalyzer II.

Soil SO_4^{2-}. This analysis can be done by column or batch method. Soil is extracted with H_2O for 1 h in a 1:20 soil:solution ratio to get soluble SO_4. If an ion chromatograph or a SO_4^{2-} analytical method other than AutoAnalyzer is available, soil is also extracted with 0.032 M

NaH_2PO_4 in a 1:20 ratio to get adsorbed SO_4^{2-}. (In the batch method, we extract a separate sample for the latter and subtract soluble SO_4^{2-}; in the column method, we do H_2O and NaH_2PO_4 extractions in sequence. Extraction times for either batch or column are 1 hour.) If no other method is available, reduce the soil: solution ratio in the NaH_2PO_4 extraction to 1:5 and analyze SO_4^{2-} by Barium Chloranilate (attached). The latter is less sensitive than I.C., so ratios must be reduced, but we find results generally comparable.

5.2.2 Total Soil Nitrogen and Phosphorus

Total nitrogen is done by Kjeldahl digestion and automated colorimetry for NH_4^+. Total phosphorus is done by $HClO_4$ digestion and automated colorimetry for PO_4^{3-}.

5.2.3 Total Soil Cations

AutoAnalyzer soil digestion procedures are used to measure total soil Ca^+, K^+, and Mg^{2+}. The following dissolution method is applicable for dry, homogeneous samples that are relatively free of organic matter. Organic-rich samples would require a modification of this method.

1. Weigh approximately 0.5 g of sample and transfer it to a 100-mL Teflon beaker.
2. Add 10 mL of HF and 10 mL of HNO_3 and heat on a low-temperature hot plate, approximately 200°C, until the solution evaporates just to dryness. Do not bake.

3. Repeat the acid addition and evaporation (Step 2).
4. Dissolve the residue in approximately 10 mL HNO_3 and transfer the solution to a 150-mL Pyrex beaker.
5. Add 4 mL $HClO_4$.
6. Cover with a ribbed watch glass and take to dryness.
7. Cool, add 4 mL of HCl, approximately 25 mL H_2O, cover with a tight lid, and digest for ~1 h.
8. Cool and transfer to 50-mL volumetric flasks.
9. Use deionized H_2O, and prepare two blanks with each group of samples.

An alternate method which might be investigated for organic-rich samples would involve igniting the sample in platinum at 900°C for approximately 30 min prior to Step 2. Step 5 could be eliminated. Soil standards should be analyzed by this technique prior to sample analysis.

5.2.4 Soil Water and Element Flux Calculations

These will be made from the best information available. Some will have watershed-level water budgets to draw from, others may rely on experienced hydrologists for advice, and others may have to rely on estimates based upon evapotranspiration calculations (see Pastor and Post 1984).

Volume-weighted average annual concentrations can be multiplied by independent estimates of soil water flux to give ion flux, given certain

assumptions about how lysimeters sample soil water. Assume for the moment that lysimeters measure the true soil water flux (as do throughfall funnels). Then to get annual flux (F_c), we write:

$$F_c = \sum_{i=1}^{12} Vi\ Ci$$

where Vi = volume in month i in liters per hectare and
Ci = concentration in month i in milligram per liter. (Multiply by 10^{-6} to get kilograms per hectare). To get weighted average annual concentration (Wa), we write:

$$Wa = \frac{\sum_{i=1}^{12} Vi\ Ci}{\sum_{i=1}^{12} Vi}$$

Note that, by substitution

$$F_c = (Wa) \cdot \sum_{i=1}^{12} Vi$$

However, lysimeters do not give correct estimates of soil water flux (although we have noted that they often come very close to calculated values). If we can assume--and this is the critical assumption--that lysimeters consistently overestimate or underestimate true water flux by some factor K, then we can still get Wa:

$$Wa = \frac{\sum_{i=1}^{12} k\,(Vi)\,(Ci)}{\sum_{i=1}^{12} k\,(Vi)} = \frac{\Sigma\ Vi\ Ci}{Vi}$$

Once we have Wa, we just multiply it by the true annual water flux. This method of estimating flux does not give monthly fluxes, only annual fluxes. The only potential problems are (1) lateral flow and (2) the assumption about a constant lysimeter bias factor, K.

5.3 ADDITIONAL RECOMMENDED AND OPTIONAL MEASUREMENTS ON SOILS

5.3.1 Soil Temperature

Recommended: Weekly temperature measurements (0.5°C accuracy) at the 5-cm soil depth as close as possible to the buried bags.

Option: A second measurement taken identically to the above but at the 10-cm depth.

5.3.2 Soil Mineralization

Recommended: Buried bag sampled quarterly. Both NH_4^+ and NO_3^- determined by extraction before and after 1 month of field incubation.

Option 1: Extractable SO_4^{2-} also determined from above bag.

Option 2: Buried bags are sampled on a monthly basis.

Option 3: Use soil core in tube with resin bags in conjunction with the buried bag study.

5.3.3 Protocols for Recommended and Optional Measurements

Soil temperature. Measure soil temperature weekly at depths indicated (please note these depths are taken below the forest floor). A minimum of three measurements should be made at each plot in close proximity to the buried bags, preferentially in the same location each time. Measurements should be made to an accuracy of ±0.5°C. It is suggested that one choose a particular time of the day (e.g., as close as possible to midday) and make all temperature readings consistently around that time.

5.3.3.1 Buried Bag Incubation Study

Field Procedure. Use a standard 3-in.-diam. and 6-in. deep bulb planter as the sampling tool. Determine a point that can be sampled and carefully remove the forest floor layer. Take a soil core with the bulb planter. With care to leave the core relatively undisturbed, insert the sample into a plastic bag.

The thinner the bag the better; we recommend sandwich-size alligator baggies. Twist tie the baggie, reinsert in the corehole, and cover with forest floor. Remove a second core, take it back to the lab, and extract (see below) in order to derive initial ammonium and nitrate pool sizes.

Take ten initial samples and put in ten buried bags for each stand.

Collect bags 1 month later (unless they are left out over winter until snowmelt). Conduct this procedure quarterly so mineralization is

assessed during the months of January, April, July, and October. Under option 1, the procedure would be conducted monthly.

Laboratory procedure. Prior to any manipulation, record total fresh weight of each sample core. Mix sample thoroughly. Take a subsample of fresh soil (anywhere from 4 to 10 g, oven-dry equivalent); add 2 M KCl in a 1:10 soil:solution weight:volume ratio. For those sites that have high stone and gravel content, it may be necessary to sieve the soils after collection and proceed with the fine (<2-mm) fraction. In that case, dry weight for both components needs to be recorded. Shake for 1 h, or let equilibrate overnight with intermittent agitation. Decant (or centrifuge, or filter), and analyze for ammonium and nitrate. Be sure to include appropriate blanks; KCl could have ammonium and nitrate and so could filter paper if you filter the samples.

Percent moisture content for each sample is determined by weighing 10-25 g fresh soil in a heat-resistant container (record weight of empty container plus wet soil). Dry for 24 h at 105°C and let samples cool off in desiccator. Then record weight of dry soil plus container.

When soils were sieved, this procedure is followed for the fine and coarse fraction separately.

$$\% \text{ moisture} = \frac{(\text{weight wet soil + container}) - (\text{weight dry soil + container})}{(\text{weight dry soils + container}) - (\text{weight container})} \times 100$$

Calculations. Calculate net ammonification as initial ammonium minus final ammonium. Calculate net nitrification as initial nitrate

minus final nitrate. Calculate net mineralization as the sum of net ammonification and net nitrification. Report mean and standard deviation by sampling period and express rates in milligrams of nitrogen per kilogram per month (for oven-dry soil) or in milligram of nitrogen kilogram per month of fine soil fraction. Ammonification and nitrification rates can further be converted to

1. milligrams of nitrogen per month per core, by multiplying milligrams of nitrogen per kilogram per month (oven-dry soils) with sample core dry weight, which is given as

$$\text{core sample dry weight (g)} = \frac{\text{core sample wet weight (g)}}{(\text{\% moisture content}/100 + 1)}$$

2. Grams of nitrogen per month per square meter (to 6-in. depth or whatever depth of core is), given by

$$\frac{\text{mg N core}^{-1}}{\text{Surface area of core (in cm}^2)} \times 10$$

5.3.3.2 Sulfate Mineralization

Extraction procedure. Using soils from the buried bags described in the above procedure, take a subsample of fresh soil (approximately 10 g oven-dry equivalent); add 50 mL H_2O and shake for 1 h. Filter and analyze for SO_4 by ion chromatography. Include blanks.

Calculations. As in the case of nitrogen mineralization, calculate net sulfar mineralization as the difference between initial and final

SO_4-S and express results in terms of milligrams of sulfur per kilogram (dry soil) per month.

5.3.4 Protocol for Resin Cores

5.3.4.1 Materials

1. 1.5-in.-ID PVC tubes (3-mm-thick walls), cut into 6.75-in. lengths.
2. Knee-high nylon stockings. Each stocking can be used for two to three resin bags.
3. JT Baker #M-615 mixed bed resins. A 500-g (1#) jar makes about 60 resin bags.
4. A tablespoon.
5. 1 M NaCl to prerinse the resin bags.
6. A block of hardwood or other hammerable material that can be hammered.
7. A hammer.
8. Pliers (may be helpful).
9. A 1.5-in.-blade putty knife, with a notch or mark at 0.75-in. above the bottom.
10. Wire flags or some method of relocating tubes.

5.3.4.2 Methods

1. Resin bag preparation: Add 1 tablespoon (14 mL) of resin to a stocking, shake the resin to the toe of the stocking, tie a knot, and cut off the excess stocking. The excess can be used for one or two more bags by tying knots in the ends. Do not leave resin

bottles sitting open for long periods--the resins have about 50% moisture by weight, and they shrink a bit if dried. This shrinkage is all right except the tablespoon measure would not be consistent. To minimize analytical problems later, we have started prerinsing the bags with NaCl; this replaces H^+ and OH^- with Cl^-, minimizing pH problems for the AutoAnalyzer (plus some other strange interferences): each bag needs 100 mL of 1 M NaCl; prepare the NaCl in 1- to 2-L batches, and drop in 10 or 20 bags, which are then stirred a couple of times over an hour. Then spin-dry the bags. (Drip-drying is acceptable, too.)

2. Tube preparation: Sharpen the lower end of each tube by filing from the outside to the inside.
3. Tube placement: Choose the sampling point; carefully remove the forest floor to be consistent with the buried bag protocol), place the sharpened end of the PVC tube on the soil, place the hardwood block on top of the tube, and hammer it in. Remove the tube with the soil core intact inside it, using pliers if needed to get a good grip. With the putty knife, remove the bottom 0.75-in. of the soil core, and replace it with resin bag. This provides a 6-in. soil core (as in the buried bags, plus a resin bag below). There are ten tubes per stand.
4. Initial sample: To determine the initial ammonium and nitrate present in the soil, collect four or five cores (as described above) for initial extractions.

5. Incubation period: Leave the resin tubes in for about 4 months; then replace with sequels to cover a full year.
6. Collection and processing: Collect the cores, placing the resin bag in one plastic bag and the soil core in another. (The PVC tube can be reused for the next incubation periods.) Be sure to label the bags. Store the soils at 2-4°C till extracted, the sooner the better. The resins can be air dried, or oven dried at 40°C.
7. Soil extraction and analysis: Follow protocol for buried bags.
8. Resin extraction: Place resin in 125-mL (or similar) plastic bottle; you may leave the resin in the bag, or cut the bag and pour the beads out. (Dry beads come out of the stocking easily; moisten one stick.) Add 100 mL of 2 M KCl; shake 1 h, or let sit overnight. Decant 20 or more milliliters of the extract for analysis.
9. Resin analysis: The AutoAnalyzer cooperates best if the KCl extracts are diluted 1:20 or more with DDW--dilution loops work well. Standards should be made in 2 M KCl, diluted 1:20 through the loops. Blanks should be prepared by extracting 1 tablespoon of resins (prerinsed with NaCl) as above. This overall procedure recovers about 80-90% of the ammonium and nitrate adsorbed on the resins. Note: Steve Hart reports that dilution is not necessary when using a Lachat instead of an AutoAnalyzer, but we do not yet know why.

10. Quality assurance: In addition to normal replicates, blind duplicates, etc.:

    a. For soil cores after incubation, you may want to (1) mix a core well, split into two to four subsamples and (2) add 5 mL of dilute ammonium nitrate (to perhaps double the ammonium and nitrate concentrations in the soil). Later comparison of spiked and unspiked samples will allow determination of ion recovery and change during handling.

    b. For resins, prepare 100 mL of dilute ammonium nitrate solution. Drop in a resin bag; let it sit for 1 h, and then process it as above. Recovery of the ammonium and nitrate should be about 80-90%, but may vary.

11. Units: Report values as net production of ammonium and nitrate for (a) the soil core, (b) the resin bag, and (c) the sum of the soil plus resin.

Comments: If your site is rocky, an estimate of the percent of random points that could actually be sampled with the core would be nice. Run a transect, insert a screwdriver to 6.75 in.; if it goes all the way, the point can be sampled; if it does not, it cannot be sampled.

You may want to reinstall the PVC tubes as close to the same position every 4 months as possible--this "pairing" may provide a better picture of seasonal patterns than completely randomized resampling.

6. QUALITY ASSURANCE ACTIVITIES FOR THE INTEGRATED FOREST STUDY

All work related to the IFS is subject to a comprehensive set of quality assurance (QA) procedures. They are designed to provide accurate and timely feedback of information on the field, laboratory, and data analysis functions required for production of a reliable data set. Descriptions of these procedures follow.

6.1 DEPOSITION TASKS

6.1.1 Site-Specific Laboratory Activities

Blank extractions of unexposed deposition plates and aerosol filters are routinely performed. These procedures monitor both the apparatus washing process and the quality of the filter materials being used. Particular attention is given the K_2CO_3-treated SO_2 filters with blanks extracted at the beginning and end of use of each prepared lot. The procedures are identical to those employed for field-exposed materials.

Integrity of the purified water and its processing system is ensured through routine conductance measurement, regular maintenance of the ion-exchange and carbon elements, and periodic chemical analysis of the water. Blank plate and filter extractions also provide checks for water quality problems, should they occur.

Washing protocols for all sampling materials have been established and are strictly adhered to. All materials are precleaned by hand washing where necessary to remove visible debris. This is done in a

flowing stream of double-distilled water, with lint-free tissues used for scrubbing. A flowing stream rinse is then done with apparatus handled by polyethylene-gloved hands. Finally, the items are segregated by type into dedicated containers for soaking in a large volume of double-distilled water. After 24 h the water is poured off and replaced for another 24-h soak. Drying is then done in a dust-free oven, after which bottles are capped and all other items are stored in clean polyethylene bags.

Filter packs are prepared for exposure and later disassembled for extraction inside a laminar-flow clean bench. Gloved hands and dedicated, cleaned forceps are used. Prior to use, the loaded filter packs are stored, double-bagged, inside an otherwise empty desiccator. If exposed packs are not immediately extracted, they are stored inside a separate empty desiccator.

6.1.2 Site-Specific Field Activities

Field blank checks have been done on rain and throughfall sampling bottles and funnels after 7-14 d of deployment in the precipitation samplers under dry conditions. This is carried out in the field by rinsing 20 mL of distilled water over the funnel surface and into the bottle. A single syringe is used for all samples, and water is drawn from a bottle of double-distilled water from the laboratory. The collection bottles are capped and thoroughly shaken before samples are taken for analysis. The rinse water is also analyzed.

The bucket cover pads of the precipitation samplers are routinely inspected and cleaned and replaced when necessary. Replacement pads are stocked on-site.

The Belfort recording rain gage is inspected and calibrated in June and December by the ORNL Plant and Equipment Division. Certified calibration weights and setting gages are used. To date, the instrument has passed all inspections and has required no repairs. Spare parts are stocked on-site. Modification for winter use is made during the first week of November (funnel removed and catch-bucket antifreeze added).

Weekly inspection of the meteorological instruments and the data logger is performed. Power supply voltage is checked and recorded, and batteries are replaced monthly to quarterly. Data accumulated in the storage module is processed monthly, with detailed examination for performance problems that may exist.

Meteorological QA checks have been performed by using side-by-side comparisons for extended time periods with similar instruments of known calibration.

Replicate sampling activities have been done for rain, TF, coarse particles, aerosols, SO_2, and HNO_3. For aerosol and gas sampling, identical filter packs and mass flow-controlled air pumps are used. The pumps are calibrated with a Gilian bubble flowmeter and are periodically checked in the field with a Gilmont ball flowmeter which is also calibrated with the Gilian standard. Coarse-particle replicate sampling

is done with replicate deposition plates installed adjacent to the primary plates. Procedures for extraction and chemical analysis are identical and are done at the same time.

The accuracy of vapor sampling has been tested by comparing results obtained in the field with those observed under controlled conditions or by comparison in the field with another sampling method. For HNO_3, standard vapor concentrations are generated from permeation tubes in a Kin-Tek 570-C gas standards generator. The HNO_3 is converted to NO_2 by using methods described by Burkhardt et al. (1988) and subsequently measured with a chemiluminescent NO_2 analyzer. Instruments are calibrated daily with NBS-traceable standards. Evaluations for SO_2 have been made between selected filter pack runs and real-time measurements for the same time periods. Continuous monitoring at the site is done by means of a Uv-fluorescence SO_2 analyzer which is calibrated in April and August with NBS-traceable standards.

Variability of throughfall hydrology at the Smokies tower and spruce and Oak Ridge loblolly pine sites has been thoroughly documented and analyzed. For this purpose, a network of wedge-type rain gages is maintained, and amounts are recorded for each event. Additionally, a Belfort recording rain gage is used for the measurement of throughfall amounts. Similar variability evaluations of throughfall chemistry and ion fluxes have been done at both sites.

6.1.3 Site Specific Data Activities

The difference between measured and calculated conductance of aqueous samples (e.g., rain, TF, and aerosol extractions) is used as a screening tool for questionable data. Similarly, notable differences in cation/anion balance may indicate problems. If field contamination is not indicated, then such samples may be resubmitted to the Analytical Chemistry Division for reanalysis and error checking.

Field observations, recorded as notebook comments, are made part of the data set and provide insight into the causes of questionable data.

Time series plots of analytical results for each ion are examined to reveal unusually high or low values that merit further attention. Statistical summaries are also available for evaluation of data.

6.1.4 Intersite Activities

Repair parts for the Aerochem Metrics precipitation samplers have been retained at ORNL to minimize downtime while replacements are being shipped from the manufacturer.

Performance evaluations of the mass flow-controlled air sampling pumps are done by means of a calibrated Gilmont ball flowmeter. The instrument is sent in rotation to the various sites for use by their personnel. Flow checks are made on actual sampling runs by attaching the flowmeter to the front of the filter pack both at the beginning and the ending of the run. Measurements are compared to the values recorded by the data logger. ORNL is then notified of the results and intercedes if corrective action is indicated.

Intersite chemistry QA comparisons have been made for all sites. Aliquots of rain, TF, and SF samples analyzed at each off-site location have been forwarded to ORNL for comparison of analysis by the Analytical Chemistry Division. Sites are notified of the results, and if differences of greater than 10% from their values arise, the causes are determined and appropriate changes are made.

6.2 NUTRIENT CYCLING TASK

6.2.1 Laboratory Activities

Both solid (soil and plant tissue) and solution samples have been exchanged between ORNL and other labs for QA cross-checks. In most cases, comparisons were quite good. Problems revealed, such as improper drying of plant tissue and the use of colorimetric analyses for SO_4^{2-} on colored waters, were corrected. Each site was also encouraged to participate in both the NAPAP and International Union of Forest Research Organizations (IUFRO) sample exchange program, as ORNL did.

6.2.2 Field Sampling Activities

There were initial concerns and much discussion about sampling frequency and the possibilities of samples changing in bottles between collections. Many of us operating remote sites with many replications simply were not in a position to collect on an event or even a weekly basis with the resources at our disposal. In an attempt to determine the extent to which changes might occur, we conducted some aging studies in the Smokies sites by leaving subsamples of selected soil solution

collections in the field (next to the collector) for another month after collection. We were most concerned about the spoilage of NO_3^- and Al^{3+} in soil solutions since these are the major and biologically important components of soil solutions that are most likely to spoil.

The results were mixed but not unduly discouraging. We found that TF NO_3^- decreased with aging, a result we expected based upon previous studies by Steve Lindberg. Fortunately, we will have the event data from him and the other deposition people to use in most cases, and we can conduct further comparisons on an annual basis between event and bulk TF fluxes at most of the sites. We found virtually no change in soil solution NO_3^- in the summer time tests but some tendency for decreases in the winter time tests. There were sometimes "ringers" among the NO_3^-, Al^{3+}, and Cl^- comparisons (it is unclear to what extent laboratory differences or subsampling contribute to this), but it was felt that the fundamental nature of these solutions was not changed that much by sitting in the collection bottles in the field for a month.

We have been concerned with the accuracy of soil water flux estimates. We have compared the optimal vs the more pragmatic ways (Cl^- balance, precipitation minus evapotranporation estimates, algorithms for converting soil solution concentrations into flux estimates) in which we can estimate water flux. We decided to standardize our methods by having someone experienced in the field (Jim Vose of Coweeta Hydrologic Lab) oversee the water flux estimation for all sites. The Coweeta site will also serve as a flagship of water balance studies, since these

researchers are estimating their water balances in a variety of ways, ranging from the very sophisticated protocols outlined by John Dowd to the simpler ones outlined in my letter and report.

We had some initial concerns about the leaching of aluminum from ceramic lysimeter plates (which typically consist partly or wholly of AL_2O_3), so we tested various other types (sand funnel, Teflon, fitted glass). We found the Teflon type to be unworkable for several reasons: (1) Teflon is hydrophobic and actually repels water, (2) the pore size of these lysimeters (50 μ) was much too large to retain a 10-kPa tension (need about 10 μ or less), and (3) the real lysimeter involved with the Teflon setup was the silica flour used to pack around it: the silica flour was hydrophilic and apparently provided the appropriate pore size to maintain the tension. In the end, we opted for the glass type based on its excellent hydrologic behavior and lower aluminum release than the ceramic. We noted no differences in aluminum release in solutions of pH greater than 4.3, however, so we allowed ceramic types to be used in systems where soil solution pH was not expected to go below that value. Soil content estimates are a QA problem in sites with a large stone or boulder fraction. We performed an analysis of the various methods that we used to estimate bulk density and coarse-fragment data in the Smokies sites, where the uncertainties in these parameters are significant. We concluded that the quantitative pit method was essential for these kinds of boulder soils.

7. PROJECT SUMMARY AND DESCRIPTION

7.1 RESEARCH OBJECTIVES

One of the earliest concerns over the effects of acid deposition relates to long-term acidification of soils and degradation of forest nutrient status (Engstrom et al. 1971). This concern remains very much with us today; many hypotheses for recent forest declines invoke soil acidification, declines in site Ca, Mg, or K status, and more recently, Al toxicity caused by soil acidification and increased mobile anion concentrations (see reviews by Johnson et al. 1982 and McLaughin 1985).

The Integrated Forest Study was designed to address these concerns by examining the nutrient cycles in a variety of forest ecosystems with a range of site and pollutant input conditions. The literature abounds with studies of nutrient cycling from a basic science perspective, and nutrient cycling analyses have proved invaluable in evaluating the effects of fertilization, harvesting, and fire on forest nutrient status (e.g., Curlin 1970; Leaf 1979; Cole and Rapp 1981). However, very few such studies have been conducted with the aim of assessing the effects of acid deposition (an exception being the studies at the Solling, Germany and Walker Branch, Tennessee sites; Ulrich et al. 1980 and Johnson et al. 1985). The aim of the Integrated Forest Study is to apply a nutrient cycling analysis to the acid deposition issue and, for the first time, obtain accurate estimates of atmospheric deposition within the context of nutrient cycling studies. We believe that this approach will answer many of the questions as to the effects of acid deposition on long-term nutrient status of affected forests.

To meet the principal objective, we are conducting atmospheric deposition and nutrient cycling research over a 5 year period (1985 through 1989) with the critical and specific objectives listed in Table 5. It is our intent to quantify selected soil and deposition processes in greater detail than has been previously attempted. The research is being conducted at forested sites in the northwestern, northeastern, and southeastern United States and in Norway. A site in Ontario, supported by the Canadian Forest Service, is associated with the study, as are sites in Maine and Florida which are supported by the U.S. Forest Service Forest Response Program.

At the various field sites involved in this study, there are different regimes of climate, air quality, precipitation, acidity, nutrient status, canopy type, and degree of ecosystem saturation with S, N, and H^+. For our purposes here, we define S, N, and H^+ saturation as the degree to which SO_4^{2-}, NO_3^-, and H^+ or Al are mobile in the ecosystem (i.e., the inverse of SO_4^{2-}, NO_3^-, H^+, Al retention).

A special emphasis has been given to studies of high-elevation spruce-fir ecosystems in the eastern United States because of recent reports of forest declines (especially in red spruce) and to loblolly pine studies in the southeastern United States because of its commercial importance.

We have constructed and summarized the following hypotheses regarding atmospheric deposition and its effects on elemental cycling

Table 5. Key, critical, and specific objectives of the Integrated Forest Study

Key Objective: Project short- and long-term effects of atmospheric deposition on nutrient status of various forest ecosystems (including areas experiencing growth decline).

Critical Objective I: Characterize key processes regulating atmospheric deposition and its effects on forest element cycling.

Specific Objectives:

1. Evaluate the effectiveness of different canopy types in neutralizing deposited strong acidity.

2. Determine the relative importance of organic vs inorganic S accumulation in regulating leaching in various forest soils.

3. Determine the replacement efficiency of H^+ for base cations for various forest soils of differing base saturation.

4. Determine the potential for replenishment of exchangeable base cations by soil-weathering processes.

5. Determine the potential for mitigating soil acidification by changing species composition.

Critical Objective II: Determine whether atmospheric deposition could be causing nutritionally mediated changes in forest productivity.

Specific Objectives:

1. Determine total atmospheric deposition to several forest canopies and the relative contribution to total input by major wet and dry deposition processes.

2. Calculate internal vs external (i.e., deposition) H^+ generation and estimate their relative contributions to cation leaching.

3. Determine the effect of acid deposition on foliar nutrient pools and cycling processes in the canopy.

4. Contrast elemental fluxes with soil contents and tree requirements.

5. Based upon the above research results, assess short- and long-term effects of forest nutrient status and productivity, including an assessment of nutritional causes (if any) of growth decline or forest dieback.

processes in forest ecosystems with varying degrees of S, N, and H^+ saturation (critical objective I, Table 5):

Hypothesis I: Dry deposition is a significant component of total atmospheric input of both acidic and nonacidic species to forests, even in remote areas.

Hypothesis II: Along an elevational gradient, high-elevation forests experience higher atmospheric deposition rates than do lower-elevation forests.

Hypothesis III-A: Wet and dry deposition of acids causes increased foliar leaching of base cations.

Hypothesis III-B: Ion exchange and weak-acid-buffering mechanisms combine to reduce the free acidity of rain as it passes through the deciduous forest canopy, but not in the coniferous canopy.

Hypothesis IV-A: Atmospheric H_2SO_4 inputs will cause equivalent leaching outputs of cations only in S-saturated ecosystems.

Hypothesis IV-B: Atmospheric HNO_3 inputs will cause equivalent leaching outputs of cations only in N-saturated systems.

Hypothesis V: Ecosystem S saturation is governed primarily by geochemical factors, whereas ecosystem N saturation is governed primarily by biological factors.

Hypothesis VI: Acid saturated ecosystems will retain base cations and release H^+ + Al, whereas acid-unsaturated ecosystems will retain H^+ and release base cations.

In addition to these general hypothese, we have constructed specific hypotheses regarding S-, N-, and acid-saturation processes individually, which will be tested in manipulative studies:

Sulfur Saturation Hypotheses:

S-1. All ecosystems are unsaturated with respect to higher rates of sulfur deposition.

S-2. Incorporation of SO_4^{2-} into soil Fe + Al oxides is an important ecosystem S-retention mechanism, and specifically adsorbed SO_4^{2-} is not released except by additions of more strongly bound anions.

Nitrogen-Saturation Hypotheses:

N-1. Increased atmospheric N additions will eventually cause N saturation in any ecosystem.

N-2. Reduced atmospheric N additions will cause desaturation of currently saturated systems.

Acid-Saturation Hypothesis:

H-1. Decreases in soil base saturation will not be equivalent to mineral acid inputs because (a) weathering reactions supply

exchange sites with base cations, and (b) in extremely acid soils, the replacement efficiency of incoming H^+ is limited and leads to increased leaching of H^+ and Al instead of base cations.

7.2 RESEARCH SITES

The operational sites in the study represent a range of conditions not only in terms of climate, air quality, soils, and vegetation, but also in terms of atmospheric inputs of acids and acidifying compounds, and sulfur, nitrogen, and acid saturation of the soils. Selected site characteristics are given in Table 6 (more specific details are available for each site in a report by Bondietti et al. 1989). These sites provide us with a three-dimensional matrix with which the general validity of our hypotheses can be tested. Figure 8 (top) gives a schematic representation of where the sites appear to lie relative to one another, with respect to S and acid saturation. In the cases of the previously studied Fullerton (FT), Tarklin, (TK), Douglas-fir (DF), red alder (RA), and Camp Branch (CB) sites (all circled), the monitoring data from past EPRI studies allowus to place them with some degree of certainty. With respect to the current sites, the relative placements are hypothetical at this point and are being verified by the monitoring data in this study. The sites marked with an asterisk represent those at which detailed analysis of wet and dry deposition are being performed (see Table 6). Figure 1 (page 2 of this report) indicated the

Table 6. Sites Participating in the Integrated Forest Study on Effects of Atmospheric Deposition

Site	Location	Vegetation	Soils	Climate[a] MAT (°C)	Climate[a] MAP (cm)	Elevation (m)	Deposition sampling approach[b]
Fullerton (FT)[c]	Walker Branch, TN	Mixed deciduous	Typic Paleudult	14.5	150	340	W/D
Tarklin (TK)[c]	Walker Branch, TN	Mixed deciduous	Typic Fragiudult	14.5	150	340	W/D
Loblolly pine (LP)	Oak Ridge, TN	Loblolly pine	Typic Paleudult	14.5	150	300	W/D
Nolan Divide (SS, ST) and Indian Gap (SB)	Great Smoky Mountains National Park	Red spruce, beech	Inceptisols	5.3	230	1600-1800	W/D,B
Douglas fir (DF) and red alder (RA)	Thompson Forest, WA	Douglas fir, red alder	Durochrepts	9.8	130	220	W/D
Findley Lake (FL)	Findley Lake, WA	Fir-hemlock	Cryandepts	5.4	270	1100	B
Coweeta hardwood (CH)	Coweeta, NC	Oak-hickory	Hapludults	12.6	180	700-1000	B
Coweeta pine (CP)	Coweeta, NC	White pine	Hapludults	12.6	180	720-1100	W/D
Whiteface Mountain (WF)	Lake Placid, NY	Spruce-fir	Borofolists, Haplorthods, Inceptisols	4.2	100	1000	W/D
Huntington Forest (HF)	Newcomb, NY	Mixed deciduous	Spodosols	5.4	106	530	W/D
Duke Forest (DL)	Durham, NC	Loblolly pine	Typic Hapludults	15.5	112	215	W/D
Turkey Lakes Watershed[d]	Ontario, Canada	Sugar maple-birch	Spodosols	4.4	120	350	W/D
B. F. Grant Forest (GL)	Eatonton, GA	Loblolly pine	Typic Hapludult	16.0	124	175	W/D

Table 6. (continued)

Site	Location	Vegetation	Soils	Climate[a] MAT (°C)	Climate[a] MAP (cm)	Elevation (m)	Deposition sampling approach[b]
Norway Spruce (NS)	Nordmoen, Norway	Norway spruce	Typic Udipsamment	4.3	83	200	W/D
Howland[e] (MS)	Howland, ME	Spruce-fir	Typic Haplorthod	7.2	100	60	W/D
Florida[e] (FS)	Gainesville, FL	Slash pine	Altic Haplagnod	23	132	38	W/D

[a]MAT = mean annual temperature; MAP = mean annual precipitation.
[b] W/D = event collection of wet and dry deposition separately, collection of throughfall and stemflow on an event basis as wetfall only, collection of suspended particles and gases, event collection of fog and cloudwater, and nonevent bulk deposition and throughfall; B = nonevent collection of bulk deposition and bulk throughfall only.
[c]Previously studied site not designated for further study in this project.
[d]Cooperative site funded by the Canadian Forest Service
[e]Cooperative site funded by the U.S. Forest Service (Forest Response Program)

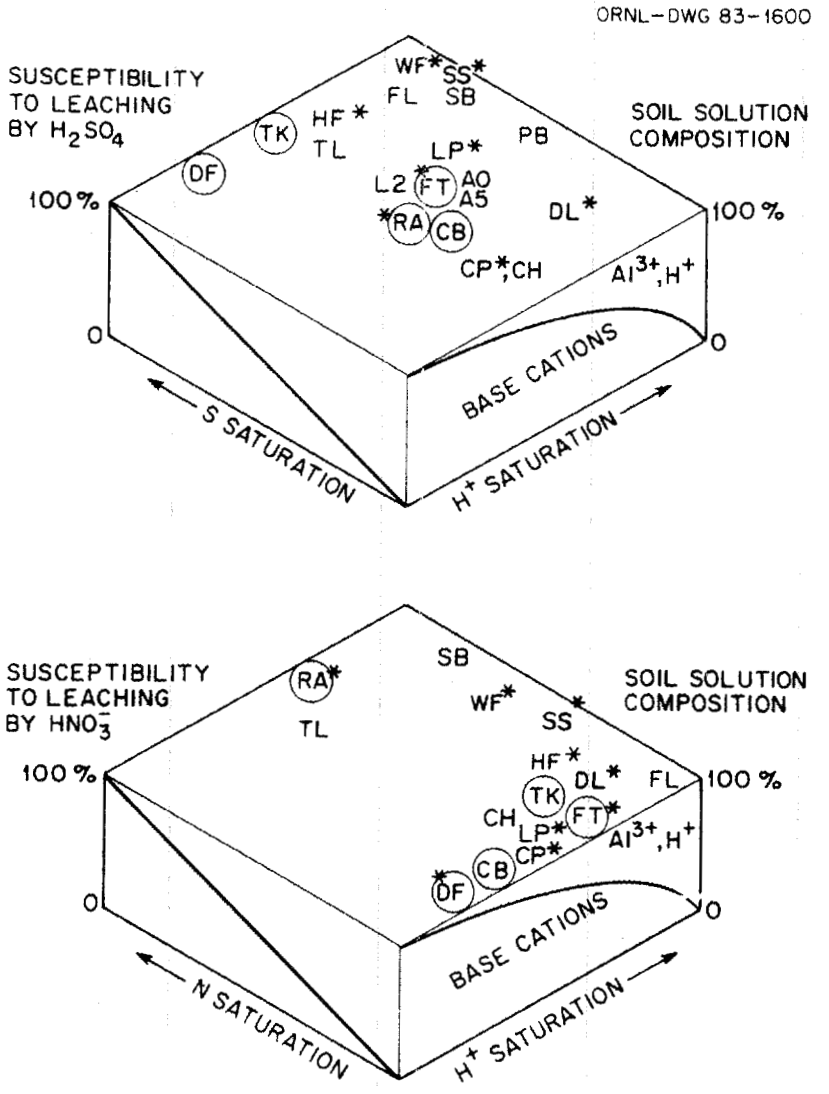

Fig. 8. Schematic representations of the degrees of S, N, and acid saturation of previously studied and new research sites. Site codes are as follows: FT = Fullerton, TK = Tarklin, LP = loblolly pine, Oak Ridge, TN (GL, B. F. Grant Forest is expected to be similar); SS = red spruce (also ST), SB = beech, Great Smoky Mountains National Park; DF = Douglas-fir, RA = red alder, FL = Findley Lake, WA; CH = mixed hardwoods, CP = white pine, Coweeta, NC; WF = spruce fir, Whiteface Mountain, NY; CB = Fall Creek, TN; HF = maple and beech, Huntington Forest, NY; DL = loblolly pine, Duke Forest, NC; TL = mixed hardwoods, Turkey Lakes, Canada. See Table 6 for site information. Sites marked with an asterisk are instrumented as intensive deposition research sites; circled sites have been studied previously. Not indicated are the following sites: Georgia, Florida, Maine, Norway.

geographical locations of the IFS sites, Figure 9 gives a schematicrepresentation of the elevational gradient covered by several of the sites.

Twelve of the sites listed in Table 6 are operated as intensive deposition research locations using the full protocols described earlier in this report: red alder (site code = RA) and Douglas fir (DF), Thompson Forest, Washington; loblolly pine (LP), Oak Ridge, Tennessee; loblolly pine (DL), Duke Forest, North Carolina; loblolly pine (GL), B. F. Grant Forest, Georgia; red spruce and balsam fir (WF), Whiteface Mountain, New York; white pine (CP), Coweeta, North Carolina; red spruce (ST), Great Smoky Mountains National Park, North Carolina; mixed hardwoods (HF), Huntington Forest, New York; red spruce (MS), Howland, Maine; slash pine (FS), Gainesville, Florida; and Norway spruce (NS), Nordmoen, Norway. In addition, the site at the Turkey Lakes watershed (TL) collects more limited data using protocols similar to the IFS. These sites represent a range of atmospheric and canopy conditions such that they vary in total input and major mechanisms of deposition and are generally representative of the overall range of S, N, and acid soil saturation being investigated. The remaining sites are operated with less intense deposition monitoring due to their remote locations.

The susceptibility of these sites to leaching by atmospheric S and N inputs depend upon the degree to which the sites are saturated with respect to S and N. If substantial fractions of incoming S and N are retained within a given site, the potential effects of atmospheric deposition on soil SO_4^{2-}, NO_3^-, and associated cation (acid or base)

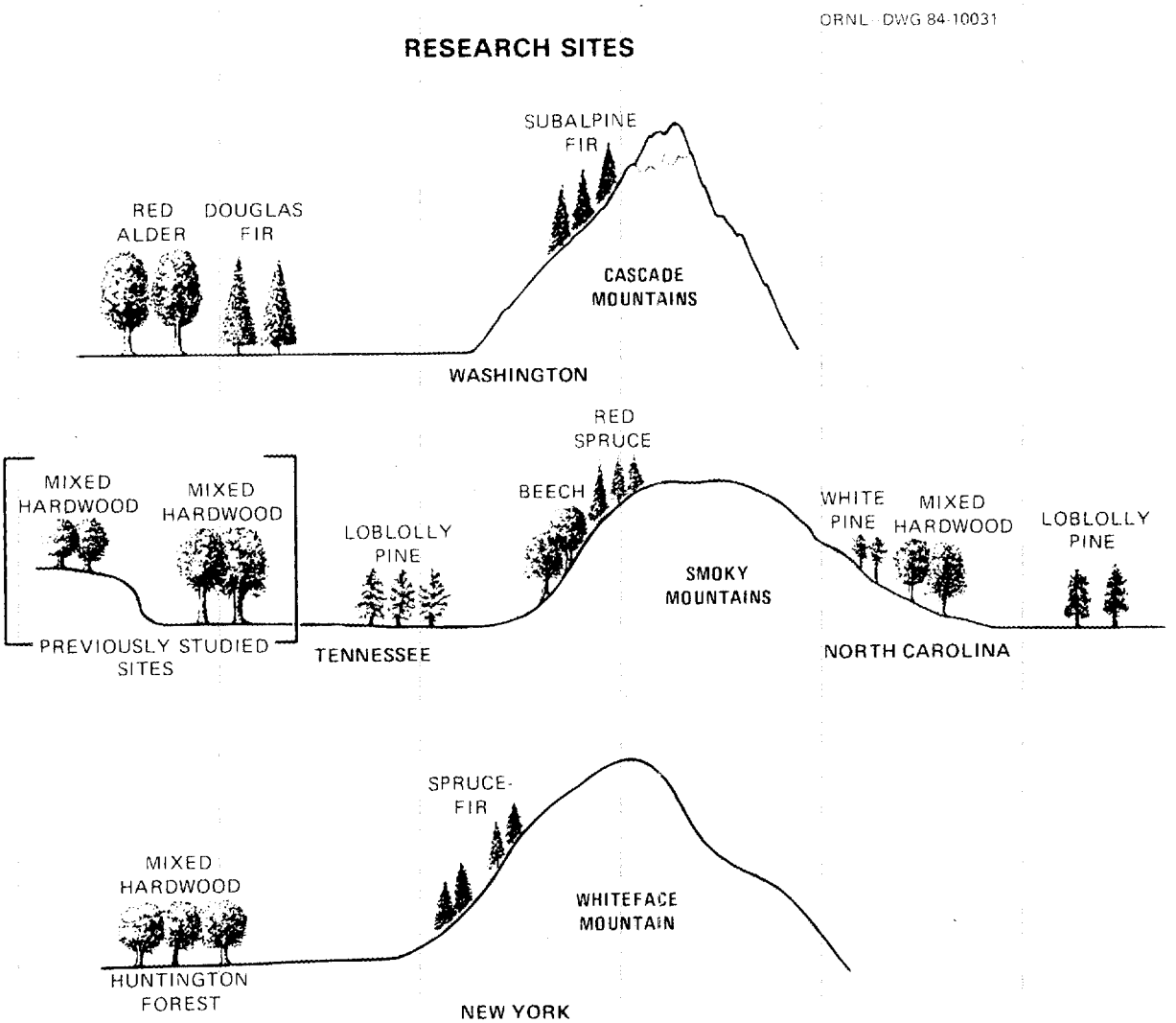

Fig. 9 Indication of the elevational gradient covered by several of the in- and near-mountain IFS sites. The Georgia, Florida, Canada, and Norway sites are not depicted.

leaching are reduced to the extent that ecosystem S and N retention occur. In sites that are S- or N-saturated (e.g., no ecosystem S or N retention occurs), the full potential of atmospheric deposition on soil leaching is realized. We hypothesize that S saturation is regulated primarily by inorganic chemical processes (soil adsorption) whereas N saturation is dependent upon biological processes (plant and soil microbial uptake, nitrification).

The extent to which acid cations (Al, H^+) vs base cations (Ca^{2+}, Mg^{2+}, K^+, Na^+) are mobilized in response to increased SO_4^{2-} and NO_3^- leaching depends to a large extent upon the degree of acid saturation of the soil (the inverse of base saturation). In extremely acid soils, the dominant cations in soil solution will tend to be Al and H^+, whereas in less acid soils the dominant cations in soil solution will tend to be Ca^{2+}, Mg^{2+}, K^+, Na^+. In all cases, however, cation exchange equations predict that there will be disporportionate increases in trivalent (Al^{3+}) over divalent (Ca^{2+} and Mg^{2+}) and monovalent (K^+, Na^+, and H^+) cations with increases in SO_4^{2-} and NO_3^- concentration (Reuss and Johnson, 1986). Thus, there are potentials for episodic Al^{3+} pulses in sites subject to pulses in SO_4^{2-} and NO_3^-.

The sites in the IFS network have been tentatively placed with respect to hypothesized S, N, and acid saturation in Figure 8. The Fullerton, Tarklin Camp Branch, and mature Douglas-fir and red alder sites were intensively studied during the initial EPRI-supported soil effects project during the period 1981-1983 (RP1812-1). In addition, the Fullerton site has been studied as part of the initial EPRI

deposition and canopy interactions project (RP1907-1). We have discontinued monitoring at many of these sites but will subject soil samples from them to various tests designed to address the S-, N-, and H^+-saturation hypotheses. All past data from these sites will be incorporated into the synthesis of this project's results. Details on these earlier studies have been published (e.g. Johnson et al. 1985; Lovett et al. 1985; Lindberg et al. 1986).

7.2.1 Site Support

Most of the sites listed in Table 6 are supported directly by EPRI through subcontracts with Oak Ridge National Laboratory. In addition, we are fortunate to have the participation of several other funding agencies who support individual IFS sites. The Great Lakes Research Centre, Canadian Forest Service supports IFS research at a site at Turkey Lakes Watershed in Canada. The Norwegian Forest Research Institute and Norwegian Institute for Air Research add support to EPRI/IFS funds through a joint project at the Nordmoen forest research site in Norway. The U.S. Forest Service Forest Response Program is supporting nutrient cycling research which follows Integrated Forest Study protocols at sites in Howland, Maine and Gainesville, Florida (one site each in the Spruce-fir and Southern Commercial Pine Cooperatives). Each of these groups have modified or added to on-going nutrient cycling and deposition research to allow integration with most aspects of the EPRI IFS project. The Huntington Forest IFS site is supported by the Empire State Electric Research Corporation and New York State Energy

Research and Development Administration, and the Georgia loblolly site is supported primarily by Southern Company Services. The Oak Ridge Loblolly pine and Smoky Mountains spruce sites are also supported in part by the U.S. Department of Energy and the U.S. Forest Service Forest.

7.2.2 Principal Investigators

Tables 7 and 8 outline the current research sites, principal investigators for both field and laboratory experiments and measurement tasks, and subcontract designees.

7.3 SCOPE OF WORK

Integrated Forest Study research is divided into two major sections: atmospheric deposition and forest nutrient dynamics. These in turn are organized into field measurement tasks (Table 7) andexperimental tasks (Table 8). The relationship between these tasks is apparent from the objectives described earlier. In addressing these objectives, the atmospheric deposition tasks will provide estimates of the rates of atmospheric deposition to the canopy by precipitation, dry deposition of vapors and particles and by cloudwater and fog interception, and also the wetfall return to the forest floor. These measurements plus the results from manipulative experiments will be used to determine the effects of deposition on important canopy processes. The forest nutrient cycling tasks will provide estimates of element fluxes in litter and soil systems, estimates of internal H^+ production,

Table 7. Site locations and investigators responsible for the field measurement tasks

Site	Location	Atmospheric Deposition	Nutrient Cycling
Loblolly pine (LP) Fullerton (FT) Tarklin (TK)	Oak Ridge, TN	S. E. Lindberg[a] D. A. Schaeferg[a,r]	D. W. Johnson[a] R. B. Harrison[a,s]
Beech (SB) Red spruce (ST, SS)	Great Smoky Mountains National Park, TN and NC	S. E. Lindberg[a] D. A. Schaefer[a,r] D. Silsby[c]	D. W. Johnson[a] R. B. Harrison[a,s] H. Van Miegroet[a]
Douglas-fir (DF) Red alder (RA)	Thompson Forest, WA	G. Wolfe[d]	D. W. Cole[b,d] P. Homann[d,t]
Findley Lake (FL)	Findley Lake, WA	D. W. Cole[b,d]	D. W. Cole[b,d]
Coweeta hardwood (CH) Coweeta Pine (CP)	Coweeta, NC	W. T. Swank[b,e] L. Reynolds[e]	W. T. Swank[b,e] L. Reynolds[e]
Whiteface Mountain (WF)	Wilmington, NY	J. A. Kadlecek[b,f] J. Panec[f] E. Miller[g]	A. H. Johnson[b,g] A. J. Friedland[b,g,q] E. Miller[g]
Huntington Forest (HF)	Newcomb, NY	M. Mitchell[h] J. Shepard[h]	M. Mitchell[h] D. J. Raynal[h] E. H. White[h]
B. F. Grant Forest (GL)	Eatonton, GA	H. L. Ragsdale[b,k] J. Croom[k]	J. Dowd[b,l] W. Nutter[b,l]
Duke Forest (DL)	Durham, NC	K. Knoerr[b,i] P. Conklin[i]	D. Binkley[i] P. Conklin[i]
Turkey Lakes Watershed (TL)	Ontario, Canada	N. Foster[j]	N. Foster[j]
Norway (NS)	Nordmoen, Norway	A. Stuanes[b,m] E. Joranger[n]	A. Stuanes[b,m]
Howland (MS)	Howland, ME	I. Fernandez[o]	I. Fernandez[n]
Florida (FS)	Gainesville, FL	H. Gholz[p]	H. Gholz[p]

[a]Oak Ridge National Laboratory
[b]Subcontract designee
[c]Uplands Field Research Laboratory, Great Smoky Mountains National Park
[d]University of Washington
[e]U.S. Forest Service, Coweeta Hydrologic Laboratory
[f]State University of New York at Albany
[g]University of Pennsylvania
[h]State University of New York at Syracuse
[i]Duke University
[j]Cooperating Investigator, Canadian Forest Service
[k]Emory University
[l]University of Georgia
[m]Norwegian Forest Research Institute
[n]Norwegian Institute for Air Research
[o]Cooperating Investigator, University of Maine
[p]Cooperating Investigator, University of Florida
[q]Current address, Dartmouth College
[r]Current address, Sycracuse University
[s]Current address, University of Washington
[t]Current address, University of Minnesota

Table 8. Investigators responsible for the experimental tasks associated with the Integrated Forest Study on Effects of Atmospheric Deposition

Task	Investigators	Field site association[a]	Comments
Atmospheric Deposition			
Canopy Interactions	G. M. Lovett D. A. Schaefer S. E. Lindberg	All sites plus Carey Arboretum	Effects of acidic deposition on canopy leaching
HNO_3 Vapor Deposition	G. E. Taylor, Jr.	Oak Ridge, TN	Controlled-environment studies on HNO_3 vapor interactions with vegetation
Submicron Aerosol	E. A. Bondietti	Oak Ridge, TN	Generic deposition to various canopy types
Forest Element Cycling			
Sulfur Saturation	J. W. Fitzgerald R. B. Harrison D. W. Johnson	All sites	Effects of sulfur accumulation on regulating cation leaching
Nitrogen Saturation	D. W. Cole	Red alder, Thompson Forest, WA	Effects of nitrogen accumulation on regulating cation leaching
Aluminum Mobilization, Soil Weathering	D. D. Richter R. A. April R. M. Newton	All sites	Al release, mineralogical characterization, and weathering rates
Deposition and Cycling			
Development of Nutrient Cycling Model	S. Gherini	All sites	Development of a PC-operated deposition and nutrient cycling model for IFS forest plots

and characterization of key processes leading to S, N, and H saturation in soils. The results of these tasks will be combined in assessments ofatmospheric deposition effects on forest nutrient cycles, which can in turn be applied to assessments of nutritional causes of forest dieback and long-term effects on productivity. The mechanism for integrating these tasks is described below. A graphical presentation of the mineral cycling study which is being undertaken by this project illustrating the contribution of the field measurement and experimental tasks is shown in Fig. 10. A description of these tasks follows.

7.3.1 Atmospheric Deposition

There are four research tasks within the atmospheric deposition section. The field measurements task quantifies deposition fluxes of major ions to the canopy and to the forest floor. This involves determination of wet-only precipitation chemistry for samples collected on an event basis above (incident precipitation) and below (stemflow andthroughfall) the forest canopy, and of the chemistryof fog and cloud water at each site. In addition, the chemistry of airborne particles and vapors and of coarse deposited particles is determined from atmospheric samples and surface-deposited material. These chemical data are combined with measurements of hydrology, canopy structure, meteorology, and modeling results to estimate total deposition fluxes to the canopy and forest floor. Section 3 of this report contains detailed descriptions of the deposition protocols.

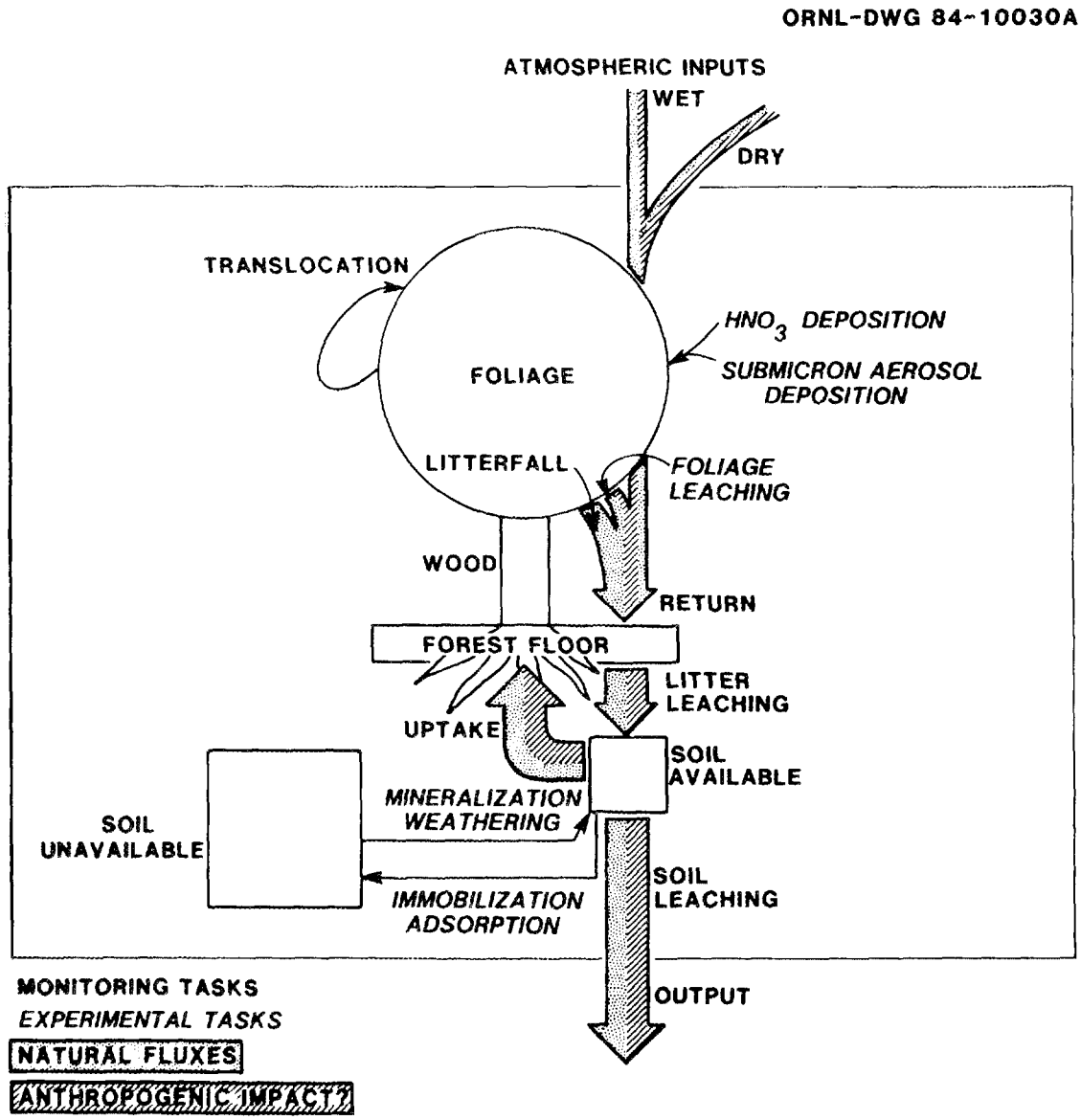

Fig. 10. A representation of the forest nutrient cycle showing the pools and fluxes to be determined in the field measurements tasks, and the focus of the experimental tasks of the IFS.

Secondary tasks involving experimental research support this measurement task. They include determination of the interactions of deposition with the canopy and its effects on canopy foliar leaching, quantification of the deposition of nitric acid vapor to vegetation under controlled conditions, and an evaluation of submicron aerosol flux to vegetation using naturally radioactive aerosols. The common goal of these tasks is to combine accurate estimates of wet and dry deposition of vapors and large particles to several forest canopies with estimates of dry deposition of submicron particles and HNO_3 to determine the total deposition and the interactions of deposition with different forest canopy types under different air-quality and meteorological regimes.

In the aerosol task, generic submicron aerosol dry deposition is evaluated by measuring the dry deposition rates of ^{212}Pb (10.6-h half-life), in humid climates, and ^{7}Be (53.3-d half life) which will be examined in arid climates. These naturally occurring isotopes trace the submicron aerosol because they condense on ambient aerosols and participate in particle growth. They can be examined under conditions where their presence on vegetation is solely the result of dry deposition.

The canopy interactions task involves an investigation of the effects of acidic deposition and pollutant gas exposure on nutrient cycling processes in the forest canopy. Most of the work is being performed at the Cary Arboretum in Millbrook, New York, and at ORNL and focuses on deciduous and coniferous species characteristic of forests in the Northeast and Southeast. In one study, attached branches are

exposed in the field to solutions of varying pH and air with different concentrations of O_3. Rates of foliar leaching of important nutrient ions are determined in replicate treatments. Experimental methods are also employed to determine the internal (apoplastic) foliar concentrations of the macronutrients, because these concentrations can regulate nutrient leaching from the leaves. Additional tasks include collection of sequential, within-event throughfall samples, and identification of the major organic acids found in throughfall under several species. This task also involves development of a general model of gaseous and particulate deposition within the forest canopy. This model will aid interpretation and extrapolation of the HNO_3 chamber studies and the surrogate surface and submicron aerosol deposition data. Input data for the model will be canopy-top micrometeorological and atmospheric concentration data collected at each site.

The HNO_3 vapor task addresses the issue of HNO_3 deposition under controlled conditions and supplies deposition rates for use in the dry depositional model. The deposition of HNO_3 vapor to vegetation is investigated in a open-gas exchange system operating with the mass-balance approach. Total foliar HNO_3 deposition in the light is the sum of HNO_3 vapor losses to the leaf surface and leaf interior. Estimates of HNO_3 deposition to the leaf surface vs leaf interior are derived through a combination of light and dark exposures, metabolic inhibitors of normal stomatal function, and a split-cuvette technique. Tree seedlings used in the study include chestnut oak, white oak, yellow-poplar, loblolly pine, white pine, and red spruce.

7.3.2 Forest Nutrient Dynamics

There are four tasks within the section on forest nutrient dynamics. The monitoring task evaluates element fluxes and contents under ambient conditions in the ecosystems listed in Table 6. To accomplish this, all sites are instrumented with bulk precipitation (in addition to detailed atmospheric sampling at selected sites), throughfall, stemflow, litterfall, and soil solution (lysimeter) collectors. Lysimeters are of the tension type (set to 0.1 atm constant vacuum), utilizing fritted glass in instances where low soil solution pH (<4.5) is likely (to avoid the release of Al from plates) or ceramic/Alundum plates where soil solution pH is >4.5. Either an electric or mechanical vacuum system is used to supply the necessary 0.1 atm constant vacuum. In addition to the flux measurements described above, the total contents of N, P, K, Ca, and Mg, and S in all ecosystem components (vegetation, litter, and soil) as well as soil available and exchangeable contents are determined. Section 5 contains detailed information on the sampling protocols in this task.

Measurements of ionic fluxes in solution, including HCO_3^-, NO_3^-, and Al, will allow estimations of the contributions of internally generated acids (carbonic, nitric, and, by charge balance estimations, organic) as well as SO_4^{2-} to the total leaching rates in these ecosystem. Uptake and accumulation of elements by vegetation will complete the budget and allow forecasts of potential soil changes due to acid deposition and the natural processes of leaching and vegetation uptake (Fig. 10).

Three sets of laboratory experiments and one field experiment make up the experimental tasks and will test hypotheses important to the interpretation of results from the monitoring tasks and to projections of atmospheric deposition effects. These laboratory tasks include determination of the relative importance of organic vs inorganic S accumulation in regulating soil leaching, evaluation of the replacement efficiency of H^+ for exchangeable base cations, and the potential for soils to resupply cation exchange sites with base cations through weathering reactions. The field experiment involves testing the reversiblity of acidification by removing a natural acid source (red alder, which fixes excess N and causes nitric acid leaching).

Collectively, these basic experimental methods are used to test the hypotheses and accomplish the objectives listed in Table 5 by monitoring elemental fluxes in a variety of ecosystems under ambient conditions, and manipulating S, N, and H+ inputs in laboratory and field studies to test hypotheses regarding S, N, and H^+ saturation.

To facilitate projections of the effects of various deposition scenarios on future forest nutrient cycling and biomass content, the IFS investigators are providing data from each site and all measurement tasks for use in development of a PC-based deposition and nutrient cycling model. Results from this model will be used to predict deposition effects on forests.

7.4 PROJECT ORGANIZATION, DATA MANAGEMENT, AND SYNTHESIS

Figure 11 outlines the functional organizational structure of the IFS project. Overall budget coordination and subcontract management is the responsibility of S. E. Lindberg, Environmental Sciences Division, ORNL. Technical management of the forest nutrient cycling and atmospheric deposition tasks is the responsibility of D. W. Johnson and S. E. Lindberg, respectively. These individuals are responsible for establishing and monitoring quality-assurance and data-reporting criteria to be used during the period of the investigation.

In order to integrate the results of the study, a matrix organization has been developed as illustrated by Figure 12. Integration centers around four topical areas: nitrogen, sulfur, acidity, and base cations. Several of the principal investigators have been selected to serve as coordinators for these topical areas and are serving as focal points for developing intercomparisons of site-specific data. The importance of these topical areas can be found in the objective section of this summary. The purpose of this matrix approach is to optimize synthesis of the deposition, canopy interactions, and nutrient cycling data across all of the IFS sites.

To ensure comparability of data sets and our ability to synthesize results, annual workshops are held in the general vicinity of IFS sites (in the Northeast, Southeast, and Northwest) for discussing data and planning work schedules. These workshops include visits to local IFS sites. In conjunction with each workshop, a formal EPRI review of project progress is held with the IFS Advisors. This group includes

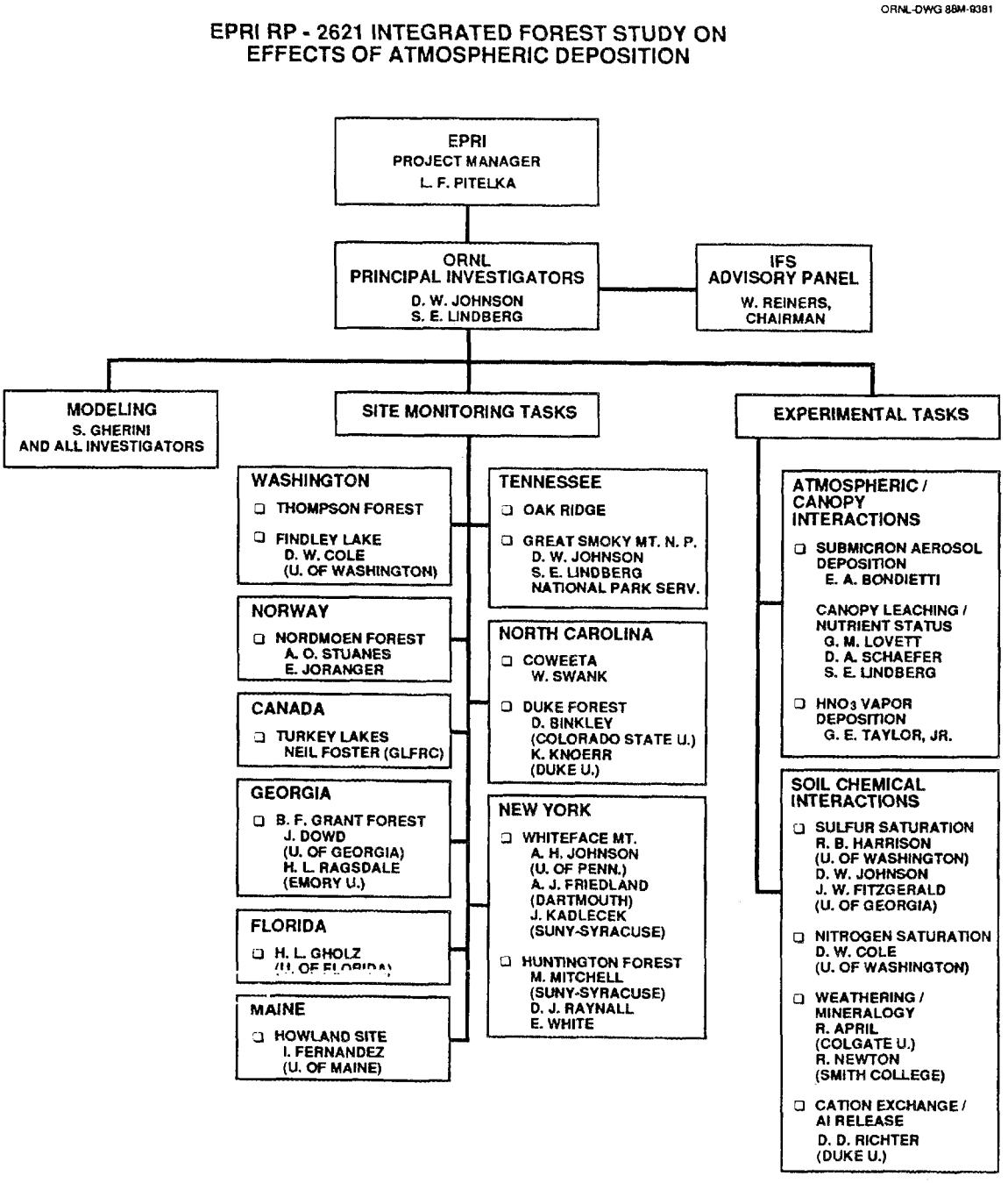

Fig. 11. Organizational chart of the field measurements and experimental tasks of the IFS showing principal investigators in each case. The Canadian, Florida, and Maine sites are participating on a cooperative basis through support of the Canadian and U.S. Forest Services, respectively.

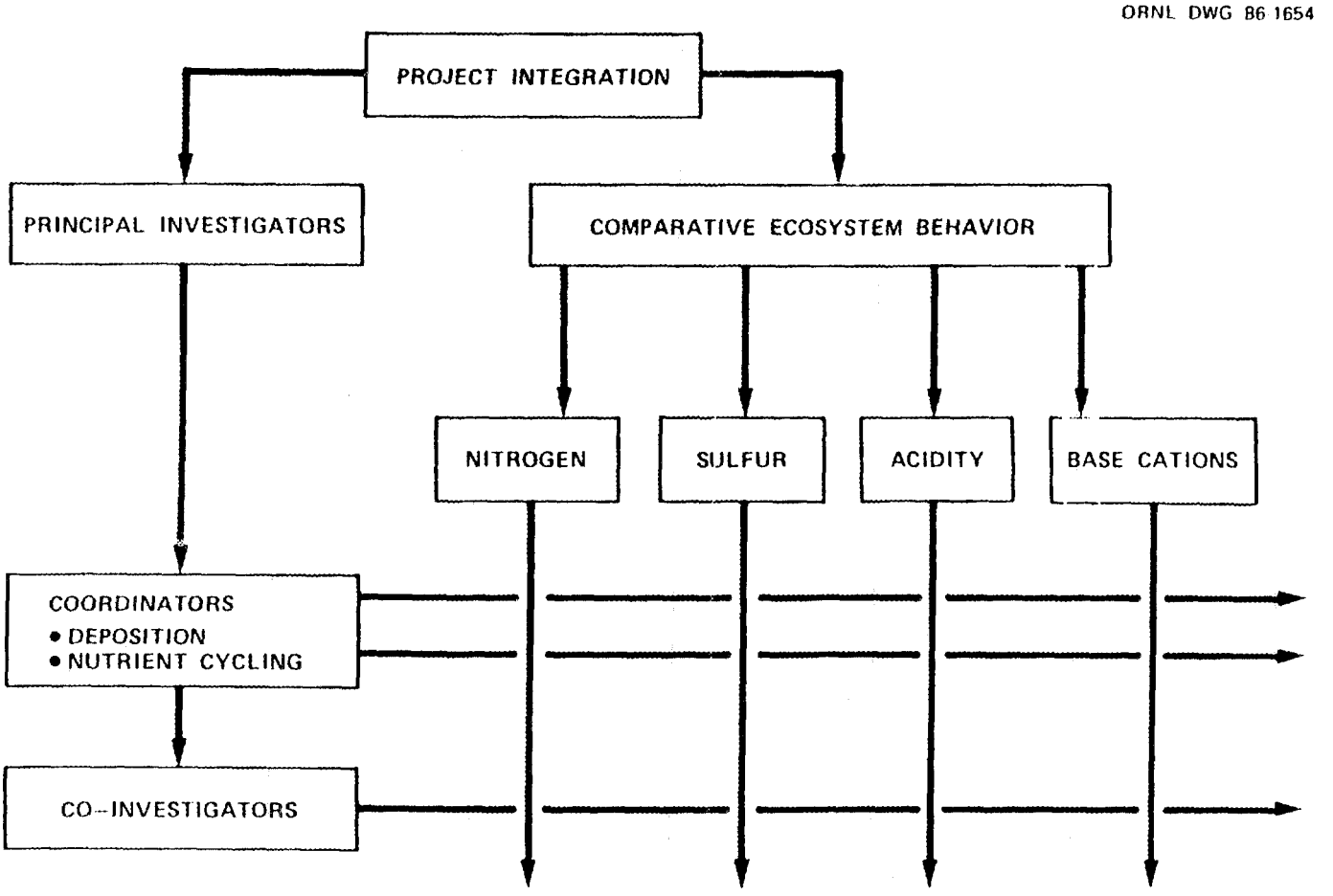

Fig. 12. Schematic of group leader structure for integration purposes.

project progress is held with the IFS Advisors. This group includes several outside scientists at universities and institutes with expertise in areas of atmospheric chemistry and deposition, geochemistry, soil science, ecology, and forest science, as well as representatives of the electric power industry.

At the first workshop (November 1985), all investigators agreed on a set of standard data-reporting forms that are used to synthesize data. These data are exchanged among investigators for comparison and discussion at subsequent workshops. Ultimately, these data forms will be used as the core of information for synthesizing project results. A draft example of such a form is shown in Table 9. Our philosophy is that, insofar as possible, basic measured values will be emphasized, rather than numbers based on complex calculations involving many (often untested) assumptions (e.g., internal H^+ generation). This will allow not only us but also future reviewers of the subject to draw interpretations from these data sets with minimal confusion as to what a given component of flux actually represents. The synthesis of earlier data in this fashion has proved to be valuable for various assessments, including those of acid deposition effects.

In addition to individual publications in the open literature, the IFS issues annual reports of progress (e.g., Lindberg and Johnson 1989) and has reached agreement with a publisher of scientific books to publish a synthesis volume of all IFS results.

Table 9. Standardized data being reported for each field site in the Integrated Forest Study on Effects of Atmospheric Deposition

Ecosystem content (Eq ha^{-1}, or kg ha^{-1})		Ecosystem fluxes (Eq ha^{-1} y^{-1}, or kg ha^{-1} y^{-1})	
Component	Analyses	Component	Analyses
Overstory		Atmospheric deposition	
Foliage	Organic matter, N, P, S, SO_4-S, Ca, K, Mg	Wet-only, dry-only, and fog or cloud water, and bulk input	H^+, SO_4^{2-}, NO_3^-, total N, NH_4^+ Ca^{2+}, K^+, Mg^{2+}, Na^+, Al, Cl^-, HCO_3^- orthophosphate, total P, organic acids[a]
Branch			
Bole			
Roots			
Total			
Understory	Same as overstory analyses	Atmospheric chemistry	
Total vegetation		Gas concentrations, Fine aerosol concentrations, and coarse particles	SO_2, HNO_3, O_3, SO_4^{2-}, NO_3^-, NH_4^+, Ca^{2+}, K^+, Mg^{2+}, H^+, Na^+, Cl^-
Litter	Organic matter, N, P, S, SO_4-S, Ca, K, Mg	Litterfall	Biomass, N, P, K, Ca, Mg, S, SO_4^{2-}
Soil	Exchangeable Al, Ca, K, Mg, Na, acidity, total N, total S, total C, soluble + adsorbed SO_4-S extractable P, Total P	Throughfall Bulk, wet-only	H^+, SO_4^{2-}, NO_3^-, total N, NH_4^+, Ca^{2+}, K^+, Mg^{2+}, Na^+, Al^{3+}, Cl^-, HCO_3^- orthophosphate, organic acids[a]
		Stemflow	H^+, SO_4^{2-}, NO_3^- Total N, NH_4^+ Ca^{2+}, K^+, Mg^{2+}, Na^+, Al^{3+}, Cl^-, HCO_3^- orthophosphate[a]
		Leaching Forest Floor, Soil Horizons	H^+, SO_4^{2-}, NO_3^- Total N, NH_4^+ Ca^{2+}, K^+, Mg^{2+}, Na^+, Al^{+3}, Cl^-, HCO_3^- orthophosphate[a]

Table 9 (continued)

Ecosystem content (Eq ha^{-1}, or kg ha^{-1})		Ecosystem fluxes (Eq ha^{-1} y^{-1}, or kg ha^{-1} y^{-1})	
Component	Analyses	Component	Analyses
		Vegetation increment	
		Overstory	Organic matter, N, S,
		Foliage	SO_4-S, Ca, K, Mg, P
		Branch	
		Bole	
		Roots	
		Total understory, and	
		Total vegetation	Same as overstory analyses

[a]Only selected samples are analyzed for organic acids, total N, total P, HCO_3^-, or Al.

APPENDIX: ADDENDUM TO DEPOSITION PROTOCOLS

A.1 ESTIMATION OF DRY DEPOSITION

Approach for vapors and fine particles. We will use an "inferential" method of estimating dry deposition, which involves measuring the atmospheric concentration of a substance of interest and then applying a deposition velocity (V_d = flux to system/air concentration) to calculate the dry deposition fluxes. From the literature, we know ranges of values of the deposition velocities that are applicable to various atmospheric substances and canopy types, but we can refine the choice of deposition velocities significantly by using a model that accounts for meteorological and vegetational characteristics peculiar to each site. We use the deposition velocity model published by Hicks et al. (1987), which runs on an IBM-PC compatible microcomputer. This model has undergone some modification for application to the IFS study, primarily in the time step over which V_d is computed (hourly), in the range of forest canopy types used, and in the manner used to calculate the V_d for submicron aerosols (Bondietti et al. 1984).

Deposition model. Briefly, the model conceptualizes the transport of atmospheric material to the canopy as occurring through three regimes: (1) aerodynamic, or the mixing of above-canopy air into the canopy; (2) boundary layer, or the penetration of material through the quasi-laminar layer surrounding each leaf or branch; and (3) surface, or absorption of gases by the stomates or the plant cuticle. Each regime

is parameterized by resistances to transport, and the resistances are summed to give a total resistance for the canopy, the inverse of which is the deposition velocity (Baldocchi et al. 1987).

The aerodynamic resistance is governed by atmospheric turbulence generated by wind flowing over the rough surface of the canopy and by temperature differences between the canopy surfaces and the ambient air. This resistance can be estimated by using the wind speed and sigma theta, the standard deviation of the wind direction, which is a measure of the intensity of turbulence.

The boundary-layer resistance can be approximated with the wind speed, the diffusive properties of the depositing substances, the diameter of the leaf or branch, and the total plant surface area index (SAI).

The surface resistance can be approximated by using an empirical relationship based on the temperature, relative humidity, solar radiation, surface wetness, and SAI and plant physiological characteristics (Baldocchi et al. 1987).

This brief description illustrates the need for the meteorological and canopy structure data being collected. These data requirements are discussed in more detail in the sections that follow.

Flux of coarse particles. Coarse particle concentrations in air are difficult to measure accurately. Hence, we will rely on direct flux measurements to inert surfaces (Lindberg and Lovett 1985). These data will be extrapolated to the canopy (Lindberg et al., 1988a) using a

modeling approach (Lovett and Lindberg 1984) that relies on TF data collected at each field site as discussed above.

A.2 METEOROLOGICAL DATA

Data needs. These are used to quantify characteristics during sampled wet-dry events and to define typical conditions on a seasonal basis. They are primarily used in the calculation of dry deposition and fog/cloud input and also for wet deposition and analysis of TF data. The key variables are wind speed, standard deviation of wind direction, radiation, rainfall, humidity, temperature, and duration of surface wetness.

Raw data storage in the field. The CR21 data logger has the capabilities to compute and summarize the necessary parameters for use in the dry deposition model. Input and output programming should follow standard CR21 procedures. One-hour averaging is the time resolution over which the deposition parameters are calculated. The wind vector program of the CR21 must be used to calculate mean wind direction and its standard deviation.

Data retrieval. Data are retrieved from the field at approximately 1- to 2-week intervals using the tape recorder. The dip switches on the storage module (SM) are set as follows during regular data logging: all down except #4, which is up. (This prevents new data from writing over old if the SM capacity is exceeded; we estimate the capacity to be 300 d for storage of hourly means, so this should not be a problem.) Every 2 weeks the data from the SM are transferred to the tape twice (to

create a backup) and the SM is then initialized as explained in the CR21 manual. The first half of the tape works best, perhaps because the recording speed is less variable.

Data storage on PC files. The data are read into a PC as described in the CR21 manual. The IFS uses a set of instructions in the form of macros to import this data into a Lotus spreadsheet. It requires that the CR21 data are imported in comma-delimited format. Once in Lotus, the data are converted into a format which is compatible with the dry deposition velocity model.

Data manipulation and screening for bad data. Prior to use of the data for dry deposition calculations, it is necessary to screen the data for bad values. Problems to search for are outliers, inconsistent values, abnormal values, and invariant values over long time periods. Programs to do these checks are available. This must be done at least weekly to uncover sensor problems in the field to avoid long stretches of bad data.

A.3 PLANT SURFACE AREA DATA

Approach. Some indication of total plant canopy surface area is necessary for the model. Growing-season and dormant-season values are needed for both deciduous and conifer species. Separation of foliar and woody tissue area and preferably resolution of several layers in the canopy are also necessary (see below). Probably the most economical way to do this is in conjunction with the aboveground biomass sampling

program. When trees are cut for biomass measurement, determine the area/dry weight ratio for foliage and woody tissues on a subsample of the tissues from each tree.

Use the ratio to calculate leaf area from the allometric prediction of leaf biomass, and normalize the leaf area to a unit ground area to calculate the leaf area index (LAI). Leaf area is best measured on fresh (not dried) tissue, using a leaf area meter. The foliar area/dry weight ratio often varies significantly with height in the crown (see discussion that follows). Several studies (e.g., Grier and Waring, 1974) have shown sapwood area to be a better predictor than diameter at breast height (dbh) for leaf biomass and leaf area.

For woody tissues and some needles (e.g., spruce), the area can be calculated using a cylindrical approximation for different diameter classes of branches and boles. As for foliage, use an area/dry weight ratio to calculate the woody tissue area from the biomass equations, and express the result as a woody tissue area index. Express both foliage and woody tissue area as total area (not one-sided or projected area) in square meters of foliage per square meter of ground area.

Height resolution. The estimates of cloud water input require height resolution of the surface area measurements. Data for three or more height strata will help considerably, but even two strata are better than a single SAI for the stand. The strata need not be of equal height; the best resolution (thinnest strata) should be at the top of the canopy, where most of the dry deposition "action" takes place.

Whether or not leaf area or biomass in different height strata can be effectively predicted using dbh or sapwood basal area as an independent variable depends on the regularity of tree morphology at the site. Others have found diameter or sapwood area at any given height to be an adequate predictor of foliage biomass above that height. Thus, a series of diameter or sapwood area measurements at several heights along a bole could be used to generate a leaf biomass (or area) profile.

If you calculate leaf area in several height strata, use an area/dry weight ratio specific to each stratum. If you must calculate an LAI for the entire canopy with no height resolution, use an area/dry weight ratio that is an average for foliage sampled throughout the canopy profile.

A.4 COLLECTION OF CLOUD AND FOG WATER

Collectors. Two samplers will be used for cloud/fog collection: a passive harp-type collector for cloud water at high-elevation sites and an active pump/filter type collector for fog water at low-elevation sites. These collectors collect fog/clouds by filtering air through the collection head and its high surface area impaction mesh where droplets are scavenged and run down the tube into the sampling bottle. The entire sampler must be thoroughly cleaned when received and then well rinsed with double-distilled water similar to the funnel-cleaning procedures in the original protocols. These are then bagged for storage.

Sampling Procedure. Because of the very different nature of cloud/fog events at the different sites, it is difficult to specify a protocol that is universally applicable. In addition to the information in Sect. 3.4, the following guidelines are offered, followed by examples of collection situations at high- and low-elevation sites.

- Sample 2-5 m above the canopy.
- Sample as much of a cloud/fog event as possible, given logistical constraints.
- Sample at least every other cloud/fog event occurring at your site. Expect that some samples will be lost to contamination by rain or other problems.
- At least 30 mL of sample is needed for chemical analysis; 50 mL is preferable.
- Do not let collection bottles overflow.
- Samples of mixed cloud and rain are of limited use and should be identified as such.
- The minimum useful collection period for samples is 1 hr; the maximum useful period is one event.

Example for a low-elevation site. If fog is predicted for a night, set up the cleaned fog collector on the tower the afternoon before. Use an instrument timer to start the collector at midnight and stop at 8 a.m. (Adjust these times according to your own experience.) Collect and process the sample early the next morning. Record the duration of

the fog event (from the wetness sensor reading), the duration of the sampling interval (from the timer), and the volume of the sample collected.

Example for a high-elevation site. Deploy the collector above the canopy, near the cup anemometer, as soon as possible after the start of a cloud event. Record the starting time of the event and the sample. The collection rate will vary strongly with the wind speed and the water content of the cloud, so it will be necessary to remain near the sampler to check the amount collected. Use the intervening periods for other tasks at the site. Follow these guidelines when checking the sample:

- If the elapsed time is over 1 h and the sample volume is over 50 mL, cap and label the bottle, and note the "on" and "off" times for the sample.
- If the elapsed time is over 1 h and the sample volume is under 50 mL, continue collecting in the same bottle until 50 mL is obtained.
- If the elapsed time is under 1 h, continue sampling in the same bottle. If the bottle is nearly overflowing, quickly pour the contents into a larger clean bottle and reattach the collection bottle. Continue to composite samples like this until an hour has elapsed. Note times as above. Attach a larger bottle to the collector for the next hour's sample.

If it rains during a sampling period, note this on the bottle and in your notebook. If the rain persists, stop the cloud water sampling.

If no rain occurs, continue sampling as long as you can safely stay at the site. If you must leave and the cloud event is still in progress, attach a larger bottle to the collector and return as soon as possible. Note whether rain occurred during the sample period. At the end of the event, record the ending time.

A.5 CLOUD WATER DEPOSITION

It is clear from the steep slopes and patchy vegetation at the mountain sites that a deposition modeling approach to estimating cloud deposition rates will have a very high uncertainty. However, the needed information can result from a semiempirical approach, as described below.

A.5.1 Cloud or Fog Water Chemistry

This will be measured using the passive (cloud) or active (fog) collectors as described above and in Sect. 3.4.

A.5.2 Deposition Rates

Rationale. The main factors controlling deposition rate are wind speed, cloud LWC, canopy geometry, and, to a lesser extent, droplet size. It is possible to determine deposition rates for cloud-only events by measuring rates of TF deposition, and these should be related to the deposition rates which are simultaneously measured by the string collectors. Collection by the string collector and the canopy should change with wind speed, LWC, and droplet size in similar ways.

Therefore, a regression of the collection rate of the string collector against the canopy drip rate should allow prediction of canopy deposition rates from string collector rates.

Procedure.

1. In each intensive plot, deploy a trough collection system for TF so that all the troughs discharge into a single tipping bucket rain gage. The major interest here is water volume, so chemical cleanliness is not a concern. A V-shaped trough can minimize splashout.
2. During cloud-only events, monitor the rate of TF deposition in the troughs while making cloud water collections for chemistry. Also monitor wind speed next to the string collector. At the start of the event, the TF drip rate should rise steadily until the canopy saturates, at which point the drip rate should be roughly constant. You will be able to see this by recording the bucket tips at ~30-min time intervals and looking for the point when the drip rate (number of tips per unit time) levels out. This may be several hours after the start of the event since cloud water deposition rates are on the order of 0.1-0.5 mm/h and the storage capacity of the canopy can be 1-2 mm. After the canopy saturates, the TF drip rate should be equal to the cloud water deposition rate minus a correction of 0-20% for evaporation. One can estimate the evaporation rate from data on wind speed, temperature, relative humidity, and solar radiation, so all net data should be recorded

during the event. (Net radiation is the best form of radiation to measure, but if there is no net radiometer, the Li-Cor radiation sensor will still be useful.)

3. After canopy saturation, record the drip from the canopy (millimeters) and the collection rate from the string collector (milliliters) for each interval that you collect cloud water for chemical analysis. The length of these intervals will depend on the collection rate, as discussed in the protocol. Thus, several paired data points of TF drip rate and string collector collection rate may be taken from each event, and as many events as possible should be sampled over the next year to provide a range of conditions for the collections.

4. As soon as enough samples are taken (perhaps 20-25?), we will regress TF drip rate on string collector collection rate for each site. We should come up with reliable regressions that calibrate the string collectors for each site. This will also provide an estimate of the error. These calibrations will be specific to each site and collector type and, once developed, will require only monitoring of collection rates from the string collectors to infer deposition to the canopies.

5. These methods will require some measure or estimate of cloud water immersion time. Measuring cloud duration time is a difficult problem. You should record cloud immersion time from visual observation at as frequent an interval as possible.

A.5.3 Annual Cloud Water Input Estimates

There are several approaches to making annual input estimates from these data. The simplest is to take the average measured canopy deposition rate and multiply it by the amount of time the canopy is in cloud. Another approach is to determine the deposition rate to the canopy as a function of windspeed and extrapolate to the whole year based on the wind speed data we collect during cloud events. At sites with extensive TF hydrology data from networks of gages, annual cloud water interception can be estimated from differences between rain and TF water fluxes on an event basis, when corrected for evaporation losses. In any case, we then multiply water deposition rates by the mean chemical concentration in the cloud water to estimate annual chemical deposition. If there is a strong correlation between wind speed and chemical concentration, the second approach could be biased. Hence, values should be determined by as many independent methods as possible to yield a range of possible fluxes.

A.6 CHARACTERISTICS OF THE FOREST CANOPY AT TOWER SAMPLING SITE

To aid in interpretation of the meteorological and air chemistry data, a detailed description of the characteristics of the canopy near the tower should be made for each site:

1. Height of tower above ground.
2. Average slope of site on which tower is located.
3. Height distribution of all canopy-dominant (not subcanopy) trees within a 30-m radius of the tower and the height of the tallest

trees and the mean canopy height in each cardinal direction. This can be done with an Abney level or other device by siting to the top of each tree within the 30-m radius. Heights within 2 m are acceptable. Identify the slope and its direction on the diagram.

4. Photographs of the canopy from the tower top in the four cardinal directions, each labeled by site name and direction.
5. Brief description of the terrain characteristics in the general upwind direction for 0-1 km and 1-5 km (include land use, roads, other possible emission sources, slope, and vegetation cover).

A.7 LOCATION OF PRECIPITATION VOLUME AND CHEMISTRY SAMPLERS

Precipitation gages. There are numerous problems with above-canopy location of rain gages. Catch efficiencies are known to be low and variable. Therefore, locate the tipping bucket and/or weighing bucket gages in forest clearings if possible. If impossible, locate the gage within the upper part of the canopy (below the tree tops but not beneath them) using a platform mounted to the side of your tower. Avoid overhanging obstructions on the tower. The most accurate and reliable gages are standard 8-in. weighing bucket gages (e.g., Belfort). With antifreeze they work well year-round. The tipping bucket gages will provide rain duration and intensity, as well as acting as a backup device.

Rain/snow samplers. There are also potential problems with above-canopy sampling for chemistry. This is a controversial area with conflicting data on both sides. Data from Walker Branch Watershed

suggest little difference in long-term means. However, to avoid the controversy, you should sample in the forest clearing if possible. If tower sampling is the only alternative, locate the collector at the top away from all overhanging and upward extending objects.

The funnel/bottle approach described in Sect. 3.3.1 works well for rain, but not for snow. At the warmer sites, occasional snows can be collected this way, covering the snow piled on the funnel with a clean plastic bag and allowing the sample to melt in the lab. At the northern and high-elevation sites, we suggest using the whole sampling bucket lined with a clean plastic bag for snow collection. The bags are retrieved intact and the snow melted in the laboratory. Bag washing may be a problem; a good series of distilled water rinses should be sufficient. Be sure to run blanks.

REFERENCES

Appel, B., Y. Tokiwa, and M. Haik. 1981. Sampling of nitrates in air. Atmos. Environ. 15:283-289.

Baldocchi, D. D., B. B. Hicks, and P. Camara. 1987. A canopy stomatal resistance model for gaseous deposition to vegetated surfaces. Atmos. Environ. 21:91-101.

Bigelow, D. S., and S. R. Dosset. 1988. Instruction manual NADP/NTN site operation. NADP Coordinator's Office, Colorado State University, Fort Collins, Colorado.

Bondietti, E.A. (Ed.) 1989. Site Descriptions of the Forests in the Integrated Forest Study, ORNL/TM-11149, Oak Ridge National Laboratory (in press).

Bondietti, E. A., P. O. Hoffman, and I. L. Larsen. 1984. Air-to-vegetation transfer rates of natural submicron aerosols. J. Environ. Radioact. 1:5-27.

Burkhardt, M. R., M. P. Buhr, J. D. Ray, and D. H. Stedman. 1988. A continuous monitor for nitric acid. Atmos. Environ. 22:1575-1578.

Cole, D. W., and M. Rapp. 1981. Elemental cycling in forest ecosystems. Page 341-409. IN D. E. Reichle (ed.), Dynamic Properties of forest Ecosystems. Cambridge University Press, London.

Curlin, J. W. 1970. Nutrient cycling as a factor in site productivity and forest fertilization. Pages 313-326. IN C. T. Youngberg and C. R. Davey (eds.), Trees Growth and Forest Soils. Oregon State University Press, Corvallis.

Engstrom, A., G. Bacstrand, and H. Stenram, (Eds.) 1971. Air pollution across national boundaries: The impact on the environment of sulfur in air and precipitation. Rep. No. 93, Ministry for Foreign Affairs/Ministry for Argiculture, Stockholm, Sweden.

Grier C. C., and R. H. Waring. 1974. Conifer foliage mass related to sapwood area. For. Sci. 20:205.

Hicks, B., D. Baldocchi, T. Myers, R. Hosker, and D. Matt. 1987. A preliminary multiple resistance routine for deriving dry deposition velocities from measured quanilities. Water Air Soil Pollut. 36:311-330.

Johnson, D. W., D. D. Richter, G. M. Lovett, and S. E. Lindberg. 1985. The effects of acidic deposition on potassium, calcium, and magnesium cycling in two deciduous forests. Can. J. For. Res. 15:773-782.

Johnson, D. W., J. Turner, and J. M. Kelly. 1982. The effects of acid rain on forest nutrient status. Water Resour. Res. 18:449-461.

Leaf, A. L., (Ed.) 1979. Impact of intensive harvesting on Forest nutrient cycling. State University of New York, Syracuse. 421 pp.

Lindberg, S.E. and D.W. Johnson, (Eds.) 1989a. 1987 Annual Group Leader Summaries of the Integrated Forest Study, ORNL/TM 11052, Oak Ridge National Laboratory.

Lindberg, S.E. and D.W. Johnson, (Eds.) 1989b. 1988 Annual Report of the Integrated Forest Study, ORNL/TM 11121, Oak Ridge National Laboratory.

Lindberg, S. E., and G. M. Lovett. 1985. Field measurements of particle dry deposition rates to foliage and inert surfaces in a forest canopy. Environ. Sci. Technol. 19:238-244.

Lindberg, S. E., and S. B. McLaughlin. 1986. Current problems and future research needs in the acquisition, interpretation, and application of data in terrestrial vegetation - air pollutant interaction studies. pp. 449-504. IN. A. Legge and S. V. Krupa (eds.), Air Pollutants and Their Effects on the Terrestrial Ecosystem. John Wiley and Sons, New York.

Lindberg, S. E., G. M. Lovett, D. R. Richter, and D. W. Johnson. 1986. Atmospheric deposition and canopy interaction of major ions in a forest. Science 231:141-145.

Lindberg, S. E., G. M. Lovett, D. A. Schaefer, and M. Bredemeier. 1988a. Coarse aerosol deposition velocities and surface-to-canopy scaling factors from forest canopy throughfall. J. Aerosol Science. 19:1187-1190.

Lindberg, S. E., D. Silsbee, D. A. Schaefer, J. G. Owens, and W. Petty. 1988b. A comparison of atmospheric exposure conditions at high- and low-elevation forests in the southern Appalachian Mountains. pp. 321-344. IN M. Unsworth (ed.), Processes of Acidic Deposition in Mountainous Terrain. Kluwer Academic Publishers, London.

Lovett, G. M., S. E. Lindberg, D. D. Richter, and D. W. Johnson. 1985. The effects of acidic deposition on cation leaching from a deciduous forest canopy. Can. J. For. Res. 15:1055-1060.

Lovett, G. M., and Lindberg, S. E. 1984. Dry deposition and canopy exchange in a mixed oak forest determined from analysis of throughfall. J. Appl. Ecol. 21:1013-1028.

Lovett, G. M. 1984. Rates and mechanisms of cloud water deposition to a balsam fir forest. Atmos Environ. 18:361-367.

Lovett, G. M., W. W. Reiners, and R. K. Olson. 1982. Cloud droplet deposition in subalpine balsam fir forests: hydrologic and chemical inputs. Science 218:1303-1304.

McLaughlin, S. B. 1985. Effects of air pollution on forests: A critical review. J. Air Pollut. Control Assoc. 35:512-534.

Olson, S.R., and L.E. Dean. 1982. Phosphorus, IN Page, A.L. (Ed.) Methods for Soil Analysis Part II, 2nd Edition, Agronomy 9:403-430.

Pastor, J. and W.M. Post. 1984. Calculating Thornthwaite and Mather's actual evapotranspiration using an approximating function. Can J. For. Res. 14:466-467.

Reuss, J. O., and D. W. Johnson. 1986. Acid deposition and the acidification of soil and water. Springer-Verlag, New York.

Richter, D. D. and S. E. Lindberg. 1988. Incident precipitation and forest canopy throughfall: Analyses of sampling methods. J. Envir. Qual. 17:619-622.

Ulrich, B., R. Mayer, and P. K. Khanna. 1980. Chemical changes due to acid precipitation in a losses-derived soil in central Europe. Soil Sci. 130:193-199.

INTERNAL DISTRIBUTION

1. E. A. Bondietti
2. R. B. Cook
3. J. H. Cushman
4. J. W. Elwood
5. M. P. Farrell
6. C. T. Garten
7. G. W. Gehrs
8. P. J. Hanson
9. S. G. Hildebrand
10. M. A. Huston
11. D. D. Huff
12. J. D. Joslin
13-22. S. E. Lindberg
23. S. B. McLaughlin
24. M. E. Mitchell
25. J. G. Owens
26. D. E. Reichle
28. D. S. Shriner
29. S. H. Stow
30. G. E. Taylor
31. R. S. Turner
32. R. I. Van Hook
33. H. Van Miegroet
34. Central Research Library
35-49. ESD Library
50-51. Laboratory Records Department
52. Laboratory Records, RC
53. ORNL Patent Office
54. Y-12 Technical Library

EXTERNAL DISTRIBUTION

55. V. Aneja, Department of Marine Earth and Atmospheric Sciences, North Carolina State University, Box 8208, Raleigh, NC 27695-8208
56. F. Andersson, Professor, Swedish Coniferous Forest Project, Sveriges Lantbruksuniversitet, Fack S-750 07, Uppsala 7, SWEDEN
57. R. April, Department of Geology, Colgate University, Hamilton, NY 13345
58. D. Baldocchi, The U.S. National Oceanic and Atmospheric Administration, Atmospheric Turbulance and Diffusion Division, Oak Ridge, TN 37830
59. A. Bartuska, Southern Commercial Forest Research Cooperative, 1509 Varsity Drive, Raleigh, NC 27606
60. D. Binkley, Forest and Wood Sciences, Colorado State University, Ft. Collins, CO 80523
61. M. Bredemeier, Institut für Bodenkunde und Waldernährung, Universität Göttingen, Büsgenweg 2, D-3400 Göttingen, Federal Republic of Germany
62. P. F. Brewer, Tennessee Valley Authority, LP3S151F, Chattanooga, TN 37402-2801
63. R. D. Briggs, Cooperative Forest Research Unit, School of Forest Resources, University of Maine, Orono, ME 04469
64. M. K. Burke, The Woods Hole Research Center, 13 Church Street, P.O. Box 296, Woods HOle, MA 02543
65. D. W. Cole, College of Forest Resources AR-10, University of Washington, Seattle, WA 98195
66. R. R. Colwell, Director, Maryland Biotechnology Institute, Microbiology Building, University of Maryland, College Park, MD 20742
67. P. Conklin, School of Forestry and Environmental Studies, Duke University, Durham, NC 27706

68. W. E. Cooper, Department of Zoology, College of Natural Sciences, Michigan State University, East Lansing, MI 48824
69. E. Cowling, Department of Plant Pathology, North Carolina State University, Box 8208, Raleigh, NC 27695-8208
70. C. Cronan, Land and Water Resources Center, University of Maine, Orono, ME 04469
71. J. Croom, Human and Natural Ecology Program, Biology Department, Emory University, Atlanta, GA 30322
72. J. Dowd, School of Forest Resources, University of Georgia, Athens, GA 30602
73. K. Dwire, Quality Assurance Specialist, NSI Technology Services Corporation, Forest Response Progran, 370 Reed Road, Broomall, PA 19008
74. C. Driscoll, Department of Civil Engineering, Syracuse University, 20 Hinds Hall, Syracuse, NY 13244-1190
75. C. Eagar, Northeast Forest Experiment Station, U.S. Forest Service, 370 Reed Road, Broomall, PA 19008
76. O.T. Fahey, Department of Natural Resources, Fernow Hall, Cornell University, Ithaca, NY 14853-0188
77. K-H. Feger, Albert Ludwigs University, Institute of Soil Sciences and Forest Nutrition, Betholdstrasse 17, D-7800 Freiburg i.Br., WEST GERMANY
78. I. Fernandez, University of Maine, One Deering Hall, Orono, ME 04469
79. J. Fitzgerald, Department of Microbiology, University of Georgia, Athens, GA 30602
80. N. Foster, Canadian Forestry Service, P. O. Box 490, Sault Ste. Marie, Ontario, CANADA P6A 5M7
81. A. J. Friedland, Environmental Studies Program, Dartmouth College, 103A Nathan Smith Bldg., Hanover, NH 03755
82. F. Fuhr, Director am Institut fur Radioagronomie, Kernforschungsanlage Julich GmbH, Postfach 1913, D-5170 Julich, WEST GERMANY
83. D. Gatz, Illinois State Water Survey, 2204 Griffith Drive, Champaign, IL 61820
84. S. Gherini, Tetra-Tech, Inc., 3746 Mount Diablo Boulevard, Suite 300, Lafayette, CA 94549
85. H. Gholz, University of Florida, 324 Newins Ziegler, Gainesville, FL 32611
86. J. Gibson, EPA, MD75, Research Trinagle Park, NC 27711
87. A. Gnilka, Biologist, Design Engineering Dept. Duke Power Company, 422 South Church Street, P. O. Box 33189, Charlotte, NC 28242
88. L. Granant, Dept. of Meteorology, University of Stockholm, Arrhenius Laboratory, S-106 91 Stockholm, Sweden
89. W. Graustein, Dept. of Geology and Physics, Yale University, New Haven, CT 06511
90. G. Gravenhorst, Institute for Bioclimatology, University of Göttingen, D-3400 Göttingen, FEDERAL REPUBLIC OF GERMANY
91. P. Grennfelt, Swedish Environmental Research Institute, P.O. Box 47086, S-402 58 Göteborg, Swedem
92. D. Grigal, Dept. of Soil Science, University of Minnesota, St Paul, MN 55108
93. R. C. Harriss, University of New Hampshire, Institute for Environment, Ocean, and Space, Durham, New Hampshire 03824

94. W. F. Harris, Executive Officer to the Assistant Director for Biological, Behavioral, and Social Sciences, National Science Foundation, 1800 G Street, NW, Washington, DC 20550
95. R. B. Harrison, College of Forest Resources, AR-10, University of Washington, Seattle, WA 98195
96. B. Hicks, The U.S. National Oceanic and Atmospheric Administration, Atmospheric Turbulance and Diffusion Division, Oak Ridge, TN 37830
97. P. Homann, Soil Science Department, University of Minnesota, 439 Borlaug Hall, 1991 Upper Buford Circle, St. Paul, MN 55108
98. J. Huckabee, Electric Power Research Institute, 3412 Hillview Avenue, P. O. Box 10412, Palo Alto, CA 94303
99. J. W. Icanberry, Supervisor, Research DER/RD and D, Pacific Gas and Electric Company, 3400 Crow Canyon Road, San Ramon, CA 94583
100. J. J. Jansen, Research and Development Dept., Southern Company Services, Inc., 800 Shades Creek Parkway, P.O. Box 2625, Birmingham, AL 35202
101. A. Johnson, Department of Geology, University of Pennsylvania, Philadelphia, PA 19104
102-111. D. W. Johnson, Biological Sciences Center, Desert Research Institute, P. O. Box 60220, Reno, NV 89506-0220
112. E. Joranger, Norwegian Institute for Air Research, P. O. Box 64, N-2001 Lillestrom, NORWAY
113. J. A. Kadlecek, Atmospheric Sciences Research Center, State University of New York, Albany, NY 12222
114. K. Knoerr, School of Forestry and Environmental Studies, Duke University, Durham, NC 27706
115. G. Landmann, Centre de Recherches, INRA-NANCH BP 35, Champenoux 54280, Seichamps, FRANCE
116. J. Lee, Room 26, Deering Hall, Department of Plant and Soil Science, University of Maine, Orono, ME 04469
117. G. E. Likens, Director, The New York Botanical Garden, Institute of Ecosystem Studies, The Mary Flagler Cary Arboretum, Box AB, Millbrook, NY 12545
118. G. M. Lovett, Institute of Ecosystem Studies, Cary Arboretum, Millbrook, NY 12545
119. A. Lucier, Northern Research Program Manager, NCASI Air Quality Forest Health Program, National Council of the Paper Industry for Air and Stream Improvement, 260 Madison Avenue, New York City, NY 10016
120. D. Matt, The U.S. National Oceanic and Atmospheric Administration, Atmospheric Turbulance and Diffusion Division, Oak Ridge, TN 37830
121. K. Mattson, EPA Environmental Research Laboratory, 200 SW 35th St., Corvallis, OR 97333
122. W. McFee, Department of Agronomy, Purdue University, West Layfayette, IN 47909
123. K. McLoughlin, 3890 Carman Road, Schenectady, NY 12303
124. E. Miller, State University of New York at Albany, Atmospheric Sciences Research Center, Whiteface Mountain Field Station, Wilmington, NY 12997
125. M. J. Mitchell, Dept. of Environmental and Forest Biology, College of Environmental Science and Forestry, State University of New York, Syracuse, NY 13210
126. V. Mohnen, Atmospheric Sciences Research Center, State University of New York, Albany, NY 12222

127. T. Myers, The U.S. National Oceanic and Atmospheric Administration, Atmospheric Turbulance and Diffusion Division, Oak Ridge, TN 37830
128. R. M. Newton, Department of Geology, Smith College, Northampton, MA 01063
129. J. Panek, State University of New York at Albany, Atmospheric Sciences Research Center, Whiteface Mountain Field Station, Wilmington, NY 12997
130. A. Patrinos, Office of Energy Research, U.S. Department of Energy, Washington, DC 20545
131. J. Peterson, Project Manager, New York State Energy Research and Development Authority, 2 Rockefeller Plaza, Albany, NY 12223
132-146. L. F. Pitelka, Ecological Studies Program, Electric Power Research Institute, P.O. Box 10412, 3412 Hillview Ave, Palo Alto, CA 94303
147. J. S. Porter, Forest Soils, SUNY College of Environmental Science and Forestry, Sycracuse, NY 13210
148. H. L. Ragsdale, Human and Natural Ecology Program, Biology Department, Emory University, Atlanta, GA 30322
149. D. Raynal, Dept. of Environmental and Forest Biology, College of Environmental Sciences and Forestry, State University of New York, Syracuse, NY 13210
150. W. Reiners, Department of Botany, University of Wyoming, Laramie, WY 82071
151. K. Rehfuess, Lehrstuhl Fur Bodenkunde, der Universitat Munchen, Alameisntr. 52, 8000 Munchen 20, FEDERAL REPUBLIC OF GERMANY
152. L. Reynolds, 999 Coweeta Lab Road, Otto, NC 28763
153. D. D. Richter, School of Forestry and Environmental Studies, Duke University, Durham, NC 27706
154. V. Saxena, North Carolina State University, Box 8203, Raleigh, NC 27695-8208
155. D. A. Schaefer, Dept. of Civil Engineer, Syracuse University, 220 Hinds Hall, Syracuse, NY 13244-1190
156. J. Shepard, Department of Environmental, Forest and Biology, College of Environmental Sciences & Forestry, State University of New York, Syracuse, NY 13210
157. D. Silsbee, National Park Service, Great Smoky Mountains National Park, Park Headquarters, Gatlinburg, TN 37738
158. A. O. Stuanes, Norwegian Forest Research Institute, Postbox 61 AS-NLH, NORWAY
159. W. T. Swank, 999 Coweeta Lab Road, Otto, NC 28763
160. A. Torrenueva, Environmental Studies Specialist, Ontario Hydro, 700 University Avenue, Toronto, Ontario, CANADA M5G 1X6
161. B. Ulrich, Institute of Soil Science and Forest Nutrition, Büsgemweg 2, University of Göttingen, D-3400 Göttingen, Federal Republic of Germany
162. Michael Unsworth, University of Nottingham, School of Agriculture, Sutton Bonington, UK-LE12 5RD, Loughborough, United Kingdom
163. R. J. Vong, U.S. Environmental Protection Agency, Environmental Research Laboratory, 200 SW 35th Street, Corvallis, OR 97333
164. J. Vose, 999 Coweeta Lab Road, Otto, NC 28763
165. M. Weseley, Argonne National Laboratory, APP/ER Building 181, 9700 S. Cass Avenue, Argonne, IL 60430
166. B. Wiman, Environmental Studies Programme, University of Lund, Gerdagatan 13, S-223 62 Lund, Sweden