ORNL/Sub/85-22005/1

MARTIN MARIETTA ENERGY SYSTEMS LIBRARIES

3 4456 0328518 4

OAK RIDGE NATIONAL LABORATORY

MARTIN MARIETTA

Integrated Hierarchical Computer Systems for Adaptive Protective Relaying and Control of Electric Transmission Power Systems

OAK RIDGE NATIONAL LABORATORY
CENTRAL RESEARCH LIBRARY
CIRCULATION SECTION
4500N ROOM
LIBRARY LOAN COPY
DO NOT TRANSFER TO ANOTHER PERSON
If you wish someone else to see this
report, send in name with report and
the library will arrange a loan.

POWER SYSTEMS TECHNOLOGY PROGRAM

OPERATED BY
MARTIN MARIETTA ENERGY SYSTEMS, INC.
FOR THE UNITED STATES
DEPARTMENT OF ENERGY

This report has been reproduced directly from the best available copy.

Available to DOE and DOE contractors from the Office of Scientific and Technical Information, P.O. Box 62, Oak Ridge, TN 37831; prices available from (615) 576-8401, FTS 626-8401.

Available to the public from the National Technical Information Service, U.S. Department of Commerce, 5285 Port Royal Rd., Springfield, VA 22161.
NTIS price codes—Printed Copy: A07 Microfiche A01

This report was prepared as an account of work sponsored by an agency of the United States Government. Neither the United States Government nor any agency thereof, nor any of their employees, makes any warranty, express or implied, or assumes any legal liability or responsibility for the accuracy, completeness, or usefulness of any information, apparatus, product, or process disclosed, or represents that its use would not infringe privately owned rights. Reference herein to any specific commercial product, process, or service by trade name, trademark, manufacturer, or otherwise, does not necessarily constitute or imply its endorsement, recommendation, or favoring by the United States Government or any agency thereof. The views and opinions of authors expressed herein do not necessarily state or reflect those of the United States Government or any agency thereof.

ORNL/Sub/85-22005/1
Dist. Category UC-97a

INTEGRATED HIERARCHICAL COMPUTER SYSTEMS FOR ADAPTIVE PROTECTIVE RELAYING AND CONTROL OF ELECTRIC TRANSMISSION POWER SYSTEMS

Investigation Team

A. G. Phadke,* Project Leader
S. H. Horowitz@
J. S. Thorp#

---

*Virginia Polytechnic Institute and State University
@American Electric Power Company, Inc.
#Cornell University

Technical Project Manager
Oak Ridge National Laboratory

D. T. Rizy

Research sponsored by the Office of Energy Storage and Distribution, Electric Energy Systems Program, U. S. Department of Energy

Date Completed – October 27, 1988

Date Published - November 1989

Report prepared by
Virginia Polytechnic Institute and State University
Blacksburg, Virginia 24061

under
Subcontract No. 86X–22005C

for the

ENERGY DIVISION
OAK RIDGE NATIONAL LABORATORY
Oak Ridge, Tennessee 37831
operated by
MARTIN MARIETTA ENERGY SYSTEMS, INC.
for the
U. S. Department of Energy
under Contract No. DE–AC05–84OR21400

MARTIN MARIETTA ENERGY SYSTEMS LIBRARIES

3 4456 0328518 4

REPORT BRIEF

CATEGORY: ADAPTIVE RELAYING

RENEWABLE ENERGY PROGRAM

CONSERVATION AND ENERGY DIVISION

OAK RIDGE NATIONAL LABORATORY

REPORT NUMBER ORNL/Sub/85–22005/1

AUTHORS A. G. Phadke, S. H. Horowitz, J. S. Thorp

SPONSORS Research sponsored by the Office of Energy Storage and Distribution, Electric Energy Systems Program, U. S. Department of Energy

TITLE: **INTEGRATED HIERARCHICAL COMPUTER SYSTEMS FOR ADAPTIVE PROTECTIVE RELAYING AND CONTROL OF ELECTRIC TRANSMISSION POWER SYSTEMS**

BRIEF STATEMENT OF WORK: Virginia Tech, Blacksburg, VA has explored the possibility of making transmission system relaying adapt to changing power system state. Benefits and technical challenges of such a system are analyzed in detail.

BACKGROUND

The advent of computer relaying with their programmability and communication capability has made possible the concept of adaptive protection. It is recognized that protection system settings are predicated upon assumed system state, and for optimum performance, should be allowed to track – or adapt – to a changing environment brought about by the constantly changing power system.

OBJECTIVE

To examine present relaying practices, and catalog opportunities for adaptive protection. Give a technical assessment of the potential for implementation.

APPROACH

The entire field of transmission system protection has been reviewed, and known shortcomings have been discussed. This portion of the report draws upon the extensive practical experience in relaying of the research team. The annual outage reports by NERC have also been helpful. After examining each of these known problem areas, a technical study is made of possible ways of improving the protection performance. Availability of additional useful information either locally or at remote locations is examined. The communication needs of these additional inputs are also estimated. The final stage is to examine and analyze the fall–back positions in case of loss of communications.

RESULTS

More than 20 opportunities for adaptive relaying have been identified. Each of these cases is discussed from the point of view of current industry practices, shortcomings of these practices and reasons why these limitations could not be overcome with the present technology. In each case, the adaptive improvements that are possible are also described. Implementation aspects — such as communication needs, interactions with other non–adaptive functions — etc. are also described.

It is shown that an evolutionary adaptive relaying approach is possible — indeed it is the only way to proceed. Computer organizational structures necessary for the implementation are given. It is concluded that adaptive protection of multi–terminal lines, of transformers, adaptive reclosing and adaptive out–of–step relaying are some of the most likely candidates for early acceptance by the power industry.

CONCLUSIONS

The report is one of the first studies of adaptive protection of power trans–mission systems. It shows much promise. Technically, several approaches can be implemented today. These ideas are currently being discussed in the technical community.

ORNL/Sub/85–22005/1

Author address: Virginia Tech, Electrical Engineering Department, Blacksburg, Virginia 24061.

TABLE OF CONTENTS

	Page
List of Figures	v
List of Tables	vi
Abstract	vii
Executive Summary	viii
1. Introduction	1
2. Definition of Adaptive Protective Functions	4
2.1.) *Transmission Line Protection*	4
(2.1.1.) Multi-terminal line protection	4
(2.1.2.) Adaptive Relay Settings	15
(2.1.3.) Series Compensation	18
(2.1.4.) Parallel Line Protection	20
(2.1.5.) Adaptive Security/Dependability	22
2.2.) *Transformer & Bus Protection*	25
(2.2.1.) Adaptive Percentage Differential Protection	25
(2.2.2.) Adaptive Transformer Monitoring and Protection Based on Temperature Measurements	29
(2.2.3.) Adaptive Bus Protection	31
2.3.) *Substation-Wide Functions*	32
(2.3.1.) Adaptive Reclosing	32
(2.3.2.) Data Sharing	40
(2.3.3.) Breaker Failure	44
(2.3.4.) Capacitor Banks	46
2.4.) *System-Wide Protection and Control*	48
(2.4.1.) Detection of Instability	48
(2.4.2.) Load Shedding and Restoration	52
(2.4.3.) Out-of-Step Blocking, Tripping and Islanding	56
(2.4.4.) Settings for Synchronization-Check Relays	58
(2.4.5.) Steady-State Security Assessment	60
2.5.) *Diagnostic and Alarm Functions*	63
2.6.) *Monitoring Functions*	65
(2.6.1.) Monitoring of Operations, Settings, and Operating Parameters	66
(2.6.2.) Cumulative Service of Equipment to Schedule Maintenance	67
(2.6.3.) Monitoring for Abnormal System Behavior	68
(2.6.4.) Dynamic State Estimation	70
2.7.) *Supporting System Studies*	75

	Page
3. Organizational Structures	77
3.1.) *Introduction*	77
3.2.) *Evolution of Backup Relaying*	79
3.3.) *Backup in a Digital Environment*	81
3.4.) *Organization at the System Control Center*	87
(3.4.1.) Introduction	87
(3.4.2.) Multi-terminal line protection	88
(3.4.3.) Detection of System Instability	88
(3.4.4.) Load Shedding and Restoration	89
(3.4.5.) Out-of-Step Relaying	89
(3.4.6.) Synchronization Check Relays	90
(3.4.7.) Dynamic State Estimation	90
3.5.) *Regional Organization*	90
(3.5.1.) Introduction	90
(3.5.2.) Multi-terminal lines	90
(3.5.3.) Series Compensation	91
3.6.) *Substation Organization Structures*	91
(3.6.1.) Introduction	91
(3.6.2.) Prefault Load	93
(3.6.3.) Cold Load Pickup	93
(3.6.4.) Line Charging	93
(3.6.5.) Parallel Line	93
(3.6.6.) Shunt Capacitor and Transformer Protection and Transformer Monitoring	94
(3.6.7.) Bus Protection	94
(3.6.8.) Reclosing	94
(3.6.9.) Breaker Failure	95
(3.6.10.) Data Sharing	96
3.7.) *Maintenance Practices*	97
4. Role of Communications	98
4.1.) *Introduction*	98
4.2.) *Communication Needs in Adaptive Protection*	98
5. Implementation Aspects	104
5.1.) *Acceptance by Industry*	104
5.2.) *Scenario for Gradual Introduction*	105
6. Conclusions	109
7. References	113
8. Glossary of Commonly Used Acronyms	117
9. Appendix	118

LIST OF FIGURES

Figure		Page
2.1	Infeed	5
2.2	Outfeed	5
2.3	Single phase tripping of parallel transmission lines	20
2.4	Single-phase Two-Winding Transformers	26
2.5	Percentage Differential Characteristics	27
2.6	Analog Data Sharing for Breaker and a Half Scheme	42
2.7	Voltage Instability in a Simple System	62
3.1	Hierachical Computer System for Substations	78
3.2	Computer Structures and Backup Considerations	82
3.3	Alternative Computer Structure	83
3.4	Processor to Processor Links	85
3.5	Data Highway	86
3.6	Interconnection between processors and Station Computer	87
A-1	Configuration 1 — Two-Terminal Line	119
A-2	Configuration 2 — Equal Legs & Equal Source Impedances	120
A-3	Configuration 3 — Equal Legs & Unequal Sources	121
A-4	Configuration 4 — Unequal Legs & Equal Sources	122

LIST OF TABLES

Table		Page
1	Effect of infeed on apparent impedance seen by relay	8

ABSTRACT

The report examines current protection practices on electric power transmission networks, their limitations, and the restrictions placed upon the protective systems by the current state of the technology. The field of digital computer based relaying is reviewed, and it is shown that computer relays with communication capability offer a substantial opportunity to change many aspects of relay systems for the better. In particular, the relay systems can be mad responsive to changes taking place in the power system. This concept is labeled "Adaptive Relaying," whereby relays and protective systems adapt themselves to changing power system condition.

Several opportunities for adaptive relaying are revealed. In each case a technological assessment of the needs and feasibility of the adaptive approach is made. Impact of failures of the adaptive features on the system as a whole are discussed. Safe fall-back positions are discussed. Also considered are coordination aspects of adaptive and non-adaptive relaying functions within the same system. The report concludes with a conclusions section which includes a look at the directions for future research in this field.

EXECUTIVE SUMMARY

The advent of computer relaying with their programmability and communication capability has made possible the concept of adaptive protection. The following definition for Adaptive Protection is proposed *'Adaptive Protection is a protection philosophy which permits and seeks to make adjustments to various protection functions in order to make them more attuned to prevailing power system conditions.'* It is recognized that protection system settings which are predicated upon assumed system state, and are set for optimum performance, should be allowed to track — or adapt — to a changing environment brought about by the constantly changing power system.

In the subject report the entire field of transmission system protection has been reviewed and known shortcomings are discussed. The report draws upon the extensive practical experience in relaying of the research team. The annual outage reports by the National Electric Reliability Council have been helpful. After examining each of these known problem areas, a technical study was made of possible ways of improving the protection performance. Availability of additional useful information either locally or at remote locations was examined. The communication needs of these additional inputs have been estimated. The final stage was to examine and analyze the fall-back positions in case of loss of communications.

More than 20 opportunities for adaptive relaying have been identified. Each of these cases is discussed from the point of view of current industry practices, shortcomings of these practices and reasons why these limitations could not be overcome with the present technology. In each case, the adaptive improvements that are possible are also described. Implementation aspects — such as communication needs, interactions with other non-adaptive functions — etc. are also described.

It is shown that an evolutionary adaptive approach is possible — indeed it is the only way to proceed. Computer organizational structures necessary for the implementation are given. It is concluded that adaptive protection of multi-terminal lines, of transformers, adaptive reclosing and adaptive out-of-step relaying are some of the most likely candidates for early acceptance by the electric power industry.

The report is one of the first studies of adaptive protection of power transmission systems. It shows much promise. Technically, several approaches can be implemented today. These ideas are currently being discussed in the technical community.

Adaptive relaying presupposes computer-based relays and an integrated system for protection and control. It would be possible to cite exceptions to this observation, however, the true flavor of adaptive relaying as explored in this report comes through only with computer-based relays. Programmable settings, operating principles, and input/output assignments are necessary to make relaying adaptive.

Communication between computers at various hierarchial levels is an essential element of many adaptive features. To adapt, the relay must know that something external to it has changed; and it can know this only through communication with other devices. Communication may be local — within a substation — or it could be with remote sites.

Some adaptive features could be pre-programmed and do not need communication facilities. This idea simply extends the normal adaptive abilities of existing relays. For example, through programming, one could make an overcurrent relay adapt to varying pre-fault loadings. No new inputs are required to achieve this adaptability.

Adaptive relaying begins to become a branch of power system control. Indeed, the elements of a control system — system measurements and access to switching devices — already exist in the protection systems. One can thus foresee the adaptive relaying practices and control practices for the power system becoming a single discipline in the future.

The acceptability of adaptive relaying will be determined by the acceptability of computer relays. Adaptive features that are closer to control functions are likely to be accepted first and those features which change primary protection functions will be the last to gain acceptance.

1. INTRODUCTION

Power system protection is a complex technology that permits many alternate solutions to a problem and depends heavily on engineering judgments. In addition, although most of the individual aspects of a protection system can be determined with great accuracy, the synergistic effect can not be precisely known. Relay equipment is applied, circuits configured, and settings calculated to cover the most usual circumstances. Unusual or extreme conditions are accommodated by allowing the protection to perform less than optimally, biasing the compromises to the best system performance under the circumstances, as perceived by the relay engineer.

Fault currents and voltages, given a system configuration, are readily calculated. Relay response to a given input can be accurately determined. System performance, following a pre–determined tripping and reclosing schedule, can be established using state estimation techniques. In principle, the probability of the occurrence of a fault, the characteristic of random transient phenomena, the reliability of equipment are all amenable to statistical treatment. Equipment maintenance and scheduled outages are all capable of administrative controls. Actually, however, a protection system for a given function must, at the outset, encompass all of the foregoing factors in all of their possible states. The equipment characteristics, the number and type of relays to cover primary and back–up functions, duplication and redundancy, and the specific numerical values of quantities such as settings, time delays and ratios, all must be incorporated in the initial installation. These parameters usually consider only the worst case conditions which may lead to compromise in the design.

To precisely identify the Adaptive Protection concept as it is treated in this report we propose the following definition:
'Adaptive Protection is a protection philosophy which permits and seeks to make adjustments to various protection functions in order to make them more attuned to prevailing power system conditions.'

Adaptive relaying, in the literal sense, is not a new concept. Time–delay overcurrent relays adapt their operating times to fault current magnitude. Directional relays adapt their operation to the direction of power or fault current. Harmonic restraint transformer differential relays adapt to the difference between energizing and fault current. These, however, are permanent characteristics of a

relay or relay system as initially installed to perform a given function.

The implementation of an adaptive concept however, that is responsive to temporary changes in system configuration or parameters is very difficult with analog equipment. Circuit breaker or switch status indication is derived from auxiliary contacts and each contact must be wired to each device requiring such position indication. This requires individual contacts, diodes or auxiliary relays to maintain control circuit separation. Analog information must be provided through auxiliary current or potential transformers. All of these measures introduce serious degradation of the total scheme plus significant testing and maintenance difficulties.

With the advent of digital techniques in a microprocessor–based system, the implementation of an adaptive concept is practical and straightforward. The use of adaptive features coupled with the inherent diagnostic capability can enhance protective schemes rather than degrade them, as would be the case with analog systems.

A computer technology is based upon fast sampling of an analog signal and an appropriate algorithm to create the parameters of interest, such as: logic statements that accept open–close or on–off inputs, timers, impedance to a fault, output signals, differential current, and harmonic component of signal. These elements are arranged in a hierarchy of modules and communication paths. The modules can provide stand–alone, dedicated functions such as protection, or integrated functions such as station alarms, a calculation of parameters, or equipment monitoring. The information can be exchanged between models or between computers by transmitting data digitally with unique addresses and security codes in such a fashion as to maintain the isolation of each device.

It is the purpose of this report to examine the feasibility and advisability of using digital devices to temporarily modify i.e., to adapt, some aspect of the equipment as a result of a specific situation. For instance, the protection of a multi–terminal line has always been a classic example of compromise. Distance relays, used in a stepped distance or directional comparison scheme rely on local measurements for their settings, even though the actual impedance to a fault depends upon the infeed contribution from the active taps and the strength of the source behind the relay. These settings assume the presence or absence of such infeed and a defined system configuration and are accurate only to the extent that these assumptions are true. If the exact value of the infeed or source impedance could be transmitted to each terminal, the settings could be instantly modified and no

compromise with setting criteria need be made.

In this report we shall examine the method of introducing this intelligence, either on–off states or analog data, either from local or remote devices, into a protection or control system. We shall consider the problem, the advantages and disadvantages, the communication requirements and the impact such adaptive changes would have on the existing total protection system.

More specifically, we shall perform this analysis on relay systems that provide protection for transmission lines, transformers and buses, associated functions such as reclosing, monitoring and alarms. We will also examine the application of these techniques for maintenance of individual equipment through diagnostic routines, for station–wide performance by monitoring circuit breakers, switches, transformers, etc., and for system–wide integration of protection and control functions through the advanced concept of state estimation.

The organizational structure of digital devices has considerable influence on their performance. The size of memory or processing power required is determined by the functions assigned to each module. The reliability of the system is a direct result of the redundancy provided. The performance associated with remote manipulation of the modules is affected by the communication channels. All of these will be examined in the context of the total installation, i.e. at the station, regional, and system levels.

Finally, this report shall address the question of acceptance by the industry. What is the ongoing activity, experience and outlook: What further theoretical studies, laboratory or field tests are required? How should a new technology be introduced into a mature and successful system?

In Chapter 2 adaptive protection and control schemes are identified. While some of these schemes can be implemented now, others depend on the theoretical solution to power system problems which have not yet been obtained. In some cases solutions are expected within a few years while in others solutions may take decades.

The acceptance of the adaptive approach will be evolutionary, not revolutionary. This report is intended to introduce the first and important step of identifying those adaptive possibilities that are so beneficial that the approach will be widely accepted. Hopefully, this report will also provide a foundation upon which other investigators may build, and ultimately lead to the implementation of these concepts and their integration into the existing protection system.

2. DEFINITION OF ADAPTIVE PROTECTION FUNCTIONS

2.1 TRANSMISSION LINE PROTECTION

This chapter will consist of a detailed discussion of opportunities for adaptive protection in power systems. Protection applications for power apparatus — such as transmission lines and transformers — are considered first, followed by integrated adaptive protection concepts for substations, small regions, as well as system–wide functions. In each instance, an attempt is made to place the adaptive relaying feature in the context of problems with non–adaptive conventional approach. The technological needs of the adaptive approach are also assessed.

2.1.1 Multi–terminal line protection

Objective:

Protection of multi–terminal lines is never as straight forward as that of two terminal lines. Taps which are contributors of positive sequence or zero sequence current (or of both), are likely to produce erroneous estimates of fault distances, fault direction and fault current levels. These effects adversely affect certain forms of protection, or force the protection engineer to make compromises with the protection being provided. The objective of an adaptive protection system would be to achieve reliable protection for a multi–terminal line that is comparable to that obtained with a two terminal line.

Protection problems:

the effect of multi–terminal configuration on relay settings will vary by the number of terminals, transmission line lengths between terminals and tap points, equivalent impedance at all sources, the type of relaying schemes involved, and the philosophy of the user regarding margins, etc. Obviously, with so many variables there is no simple answer to the problem of the effect of such configurations on settings. We can, however, develop an appreciation of the problem by examining the extremes of the parameters involved using simplified system representations.

To appreciate the effect that a configuration has on relay settings, there are several definitions and concepts to be considered.

1: Infeed — the condition where fault current flows into the faulted line section from a given line terminal.

2: Outfeed — the condition where fault current flows out of the faulted line section from a given terminal.

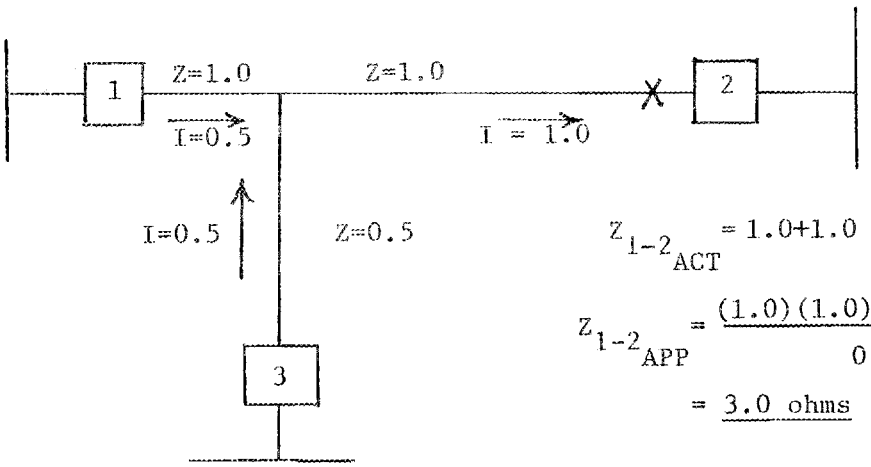

$$Z_{1-2_{ACT}} = 1.0+1.0 = \underline{2.0 \text{ ohms}}$$

$$Z_{1-2_{APP}} = \frac{(1.0)(1.0)+(1.0)(0.5)}{0.5}$$

$$= \underline{3.0 \text{ ohms}}$$

FIGURE 2.1: INFEED

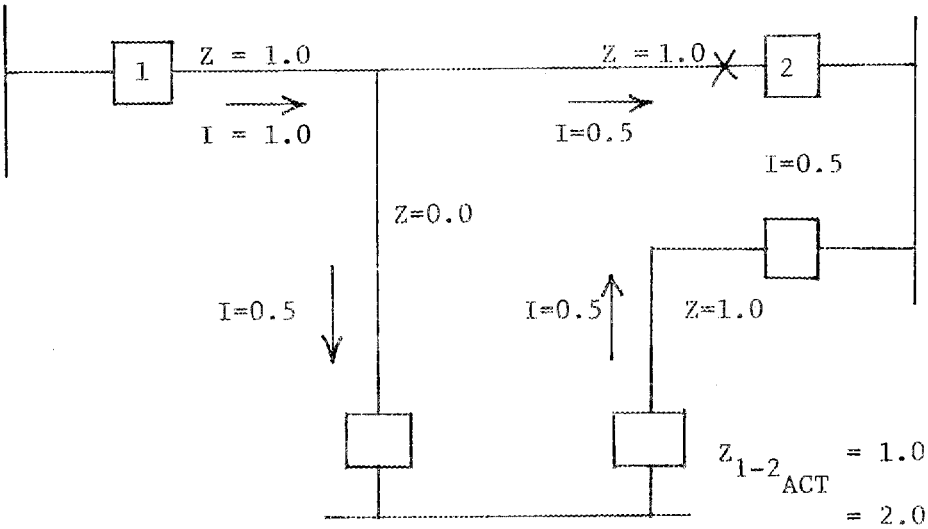

$$Z_{1-2_{ACT}} = 1.0 + 1.0$$

$$= \underline{2.0 \text{ ohms}}$$

$$Z_{1-2_{APP}} = \frac{(1.0)(1.0) + (1.0)(0.5)}{1.0}$$

$$= \underline{1.5 \text{ ohms}}$$

FIGURE 2.2: OUTFEED

Figures 2.1 and 2.2 show these concepts for a three–terminal line with equal legs and equal source impedances.

3: Actual impedance — the physical impedance from one terminal to another terminal.

4: Apparent impedance — the impedance that a relay "sees" as a result of the voltages and currents introduced into the relay at the relay location.

To analyze these effects we will assume criteria for relay settings that are, in general, the values used by most relay engineers. The following examples are based on the examples used in the IEEE Special Publication 79 TH00056–2–PWR, PROTECTION ASPECTS OF MULTITERMINAL LINES. The phase current distribution is arbitrarily chosen so that the current is 1.0 per unit in the faulted line section. The relative impedances used are as follows:

Strong source	–	1.0 per unit ohm
Weak source	–	5.0 per unit ohm
Short line	–	1.0 per unit ohm
Long line	–	5.0 per unit ohm

The 5:1 ratio is an arbitrary choice. Ratios of 10:1 or more are not uncommon in actual practice.

Table 1 shows the values associated with the following 4 system configuration. (Figures A–1 – A–4)

Figure A–1	–	A two–terminal line
Figure A–2	–	Three–terminal line with equal legs and all strong sources.
Figure A–3	–	A three–terminal line with equal legs and 1 weak source.
Figure A–4	–	A three–terminal line with unequal legs.

The detailed calculations of the values in Table 1 are shown in the Appendix.

(1) Outfeed:

This is an extreme situation that affects the performance of distance relays at the associated terminal. The direction of the outfeed current will block pilot channels tripping at all terminals until the outfeed current reverses its direction or decreases below the relay sensitivity due to 1st zone relay operation at the remote

terminals. Both zone 1 and zone 2 relays at the outfeed terminal will be inoperative until the current reverses.

(2) Pilot Scheme:

In a pilot scheme there are substantial margins allowed between the impedance of the protected zone and the relay settings. There is also coordination between blocking and tripping functions so that the effect of infeed or outfeed may not be critical.

The tripping zone in a directional comparison blocking or permissive transfer tripping scheme is set for 150–200% of the protected line section with infeed or outfeed included. The actual setting is determined by many factors such as, relay characteristics, power factor, arc resistance, loadability or coordination with other protective zones, etc. The tripping zone, Zt, is set to overreach the furthest terminal to assure simultaneous tripping at all terminals. In addition, there should be as much margin as possible between the setting and the intended impedance to assure high speed operation. On the other hand, the setting must be less than the setting of the blocking zone at the adjacent terminal and, of course, loadability must be considered. For our purposes we will use 150% of apparent impedance.

The problem that arises with a multi–terminal configuration is that the effect of infeed is to increase the apparent impedance seen by the relay, requiring the engineer to increase the reach setting, thereby reducing the ability of the relay to accommodate the load. This effect can be seen in Table 1. In all cases, the impedance without infeed is less than that with infeed, resulting in significant differences in the loadability (ability of a line to carry load without encroaching on the relay tripping zone) of the relay.

In addition, in the extreme cases of unequal legs or source impedances, there is a possibility that high trip settings will present coordination problems with adjacent line protection.

(3) Backup Relaying

The Zone 1 back–up relay is set for 90% of the protected line section without infeed. For Zone 1 backup settings the effect of infeed is to reduce the coverage provided for the line. In general, these reductions can be tolerated since the primary function of zone 1 relays is to clear close–in faults from the local terminal and reaching between 70–90% is acceptable. Complications can arise, however, if

TABLE 1

System config.	Terminal	Protected Zone W/O X'F'D Z_{ACT}	Protected Zone W/X'F'D Z_{APP}	ZT SET 1.5 Z_{APP}	Loadability 1000 Z_T	Z_1 SET .9Z_{ACT}	% Cover W/X'F'D	Z_2 Set 1.2Z_{APP}	Overreach W/OX'F'D
1.	A–C	1.0 OHM	1.0 OHM	1.5 OHM	666.7 OHM	0.9 OHM	90%	1.2 OHM	0.2 OHM
2.	A–C	2.0 OHM	3.0 OHM	4.5 OHM	222 OHM	1.8 OHM	70%	3.6 OHM	1.6 OHM
	B–C	2.0 OHM	3.0 OHM	4.5 OHM	222 OHM	1.8 OHM	70%	3.6 OHM	1.6 OHM
3.	A–C	2.0 OHM	5.0 OHM	7.5OHM	133 OHM	1.8 OHM	60%	6.0 OHM	4.0 OHM
	B–C	2.0 OHM	2.3 OHM	3.5 OHM	285.7 OHM	1.8 OHM	80%	2.79OHM	.79 OHM
4.	A–C	10 OHM	25 OHM	37.5OHM	26.6 OHM	9.0 OHM	60%	30 OHM	20 OHM
	B–C	6 OHM	2.3 OHM	3.5 OHM	285.7 OHM	1.8 OHM	71.6%	9.2 OHM	3.2 OHM

1 – A two–terminal line.

2 – Three–terminal line with equal legs and all strong sources.

3 – A three–terminal line with equal legs and 1 weak source.

4 – A three–terminal line with unequal legs.

the system configuration is such that the Zone 1 relays at each terminal do not cover the tap point when infeed is present. This may result in this area being cleared in second zone time from all terminals; a situation that could adversely affect system integrity.

If Zone 1 reach of one or more of the terminals covers the tap, the strongest sources are removed instantaneously and the weaker sources will trip as soon as the infeeds are removed.

The effect on zone 2 relaying is more critical. The Zone 2 back–up relay is commonly set for a 120–150% of the protected line section with infeed included. We will use 120%. For example, configuration 2 in Table 1 shows an overreach of 1.6 ohms for the Z2 relay, without infeed. If line DE is short, say less than 0.5 ohms, the relay at A will overreach the zone 1 relay at D whenever B is open. The classical solution to this situation is to increase the timer setting of the zone 2 relay by 1 coordinating step, i.e. an additional 20 or 30 cycles. The situation, of course, is considerably worse for the longer overreaches of conditions 3 and 4.

The above discussion can be summarized as follows:

(1) Distance relays, used for high speed and back up protection see erroneous distance to a fault because of the infeed from active taps. First zone, if set considering infeed, may be required to be set so short on a short section of the line so as to offer virtually no protection when infeed is not present. The second zone, if set to overreach the end of each line section with all taps out of service, may not be able to see the entire line when a source of infeed is connected. Ground distance relays (where used) would be similarly affected.

(2) If distance relays are used as pilot relays, the comments made above are again applicable. Directional elements may have additional problems if one of the taps produces outfeed during an internal fault.

(3) A transformer tap on a line may present similar problems. If the transformer is near a terminal but not within the station, the line relay will see low side transformer faults and therefore its first zone setting may have to be set to an extremely low value. If the transformer neutral is grounded, it is likely to make the setting of ground relays difficult.

(4) If any of the tapped line segments has a mutually coupled circuit, the relaying problems are further complicated.

When protection of multi–terminal lines is designed, the compromises forced upon the relay engineer may involve:

(1) acceptance of sequential fault clearing
(2) reducing loading limits on lines
(3) acceptance of marginal remote back–up protection for phase faults
(4) longer fault clearing times

Adaptive protection techniques:

The protection of a multi–terminal line can be made adaptive to changing environment in stages; each stage requiring a greater sophistication — hence complexity and expense — than the previous one. These stages are discussed below:

(1) Adapting to system switching: As the line taps and sources of infeed at the line terminals are switched in and out, this information can be brought to the line protection system through a low–grade communication link. Only ON–OFF information is needed, and very fast notification of status changes is not needed. As each switching operation takes place back–up zone reach (as well as the instantaneous zone reach when appropriate) would be reset accordingly. This would permit the adaptation of the best possible reach settings, instead of accepting a compromise that is appropriate for all system configurations.

(2) Adapting to system load: One of the simplest adaptive features to incorporate in a relay is to subtract the load current from the post disturbance current in order to assess the properties of the fault current. A transient detector triggers this procedure and permits relaying decisions to be based upon fault components of currents and voltages alone. Since the post disturbance current used by the relay for impedance calculation will not include the load current, the relay characteristic will no longer be a factor in determining the load carrying capability of the line.

(3) Adapting to system Thevenin equivalent: In a power system that is monitored centrally (through state–estimation), it would be possible to produce an on–line multi–port Thevenin representation for the power system as seen from the terminals of a multi–terminal line. If

these equivalents are available to the relays, all fault locations can be identified uniquely regardless of the number of taps on the line. Note that the Thevenin representations for positive and zero sequence impedance networks would have to be included in order to account for phase and ground faults. In this fashion, the normal relationship between the lengths of lines and the zone settings of the relay would be restored.

(4) Using current and voltage measurements at all terminals: This concept furnishes the ultimate refinement in relaying multi–terminal lines. Currents at all terminals are made available at the relaying location so that a very accurate distance calculation could be performed at each terminal, or alternatively, a differential relay could be applied to the line. In the computer relaying context, this implies that synchronized samples of all the phase currents are routed to the relay location, where a secure relaying decision is made based upon individual current samples or the calculated fundamental frequency components of the currents. The current differential relaying principle will be explored below after the discussion of the accurate distance relay implementation.

When real–time current phasor measurements from each of the line terminals are available, the need for the Thevenin representation disappears. The current injections at each line terminal can be used instead to calculate the fault location precisely. If line terminal voltages are also made available, the distance calculation can be made free of errors caused by fault path resistance. This technique would permit the zone settings to be extremely conservative, thereby improving the line loadability.

This type of distance calculation (when currents and voltages at each terminal are available in real time) also permits identification of the tap on which the fault occurs.

Once the faulted segment is identified, the distance calculation from each terminal can be made exact: the contribution to the fault from all other terminals being known, they can be compensated for in the distance calculation. The zone–1 settings of all relays can thus be made to 'see' into the faulted segment only, and zone–1 settings for that segment can be employed taking into account the normal

limitations imposed by transient overreach considerations. Problems with relay reach setting associated with taps of unequal length would thus be eliminated.

Current differential relaying can also be applied to the transmission line when real–time current data are available at each relay terminal. In case of high voltage lines or cables (with significant charging currents) voltage measurements would be used to calculate and account for the charging currents.

This relaying technique wherein all the terminal currents are assumed to be available is really not an adaptive technique except in the broadest sense. However, it does satisfy the needs of a multi–terminal configuration. The relaying is insensitive to load current, except inasmuch as it affects the transducer errors. It will detect internal fault even in the presence of outfeed on some tap during an internal fault. Since it is not a distance relay, it does not lend itself to remote back–up — the differential relay must still be augmented by three zones of distance relays and a directional ground relay.

It should be noted that the adaptive feature of subtracting load component from the terminal currents before obtaining the differential and restraining currents of the relay makes this relay far more sensitive. In all other aspects, this current differential relay is similar to may other relays of this type.

This technique requires the greatest investment in terms of additional hardware. Sampling clock synchronization is a necessity, as is the need for transmitting the current and voltage data samples to the relaying location over a broad band communication channel. This may call for a fiber–optic link or a satellite link to each of the tap terminations.

Input Output Needs:

These needs depend upon which of the four adaptive techniques discussed above is being considered.

(1) The first adaptive technique — adapting to system switching — requires status information of all the taps and lines originating on the remote ends of all the taps. If it is assumed that a substation computer system exists at each of the remote locations, the status of the line or tap can be established locally by considering the status of various disconnect switches and circuit breakers. Thus each remote terminal need send only a single–digit on–off type information to the adaptive relay. When the remote ends do not contain a substation

computer, the status of all the relevant disconnects and circuit breakers must be communicated. In this case, each tap or line terminal may require transmittal of several on–off type status bits to the adaptive relay. In any case, the input–output needs of this technique are modest. In addition, station one–line diagrams of each of the remote ends must be stored in the adaptive relay if it must determine the switch and circuit–breaker status information.

(2) The relaying system which adapts to prefault load needs no additional inputs.

(3) The technique using system Thevenin equivalent would require an update of the equivalent whenever it changes significantly from it previous value. This determination could be made at the control center where the Thevenin equivalent is created, and the update at the relay location could be initiated by the center when a significant change in the previously stored equivalent occurs. Note that when a tap or a line near the multi–terminal line opens, this information would be reflected in the equivalent and need not be transmitted as on–off status information as in case (1) above. An n–terminal line configuration would produce nxn positive, negative and zero sequence impedance matrices. In addition, pre–fault voltages at each of the line terminals must also be available. This is more information than the on–off status information called for in (1) above. However, the amount of data which must be transmitted is still modest and it need not be transmitted in real–time. It should be available at the relay location in order to get it to adapt to the changed system condition and be prepared for the next disturbance.

(4) This technique requires current measurements at all terminals as input to the adaptive relay. Samples of currents in each phase and the zero sequence current are needed. In addition, if line charging currents are a significant quantity, each phase voltage must also be communicated to the relay. As a good approximation, it may be possible to use the voltages at the relay location for all terminals, and thus eliminate the need to measure and transmit voltage sample data. If a sampling rate of 720 Hz is assumed, each terminal would thus contribute either 4 (three phase and ground currents) or 7 (four

currents and three voltages) 16–bit words at each sample time depending upon whether voltage measurements are transmitted.

In addition, a method of synchronizing the sampling clocks at each terminal must be found. If a fiber optic communication link is used for data transmission, pulses from a central clock must be sent to each of the terminals. It is necessary that the received pulses at each of the stations be within a few microseconds of each other.

Accuracy and Timing Considerations:

The first three adaptive protection schemes depend upon modifications of the relay reach based upon system conditions as communicated to the relay location at relatively slow speed; thus the speed and accuracy of the distance relay functions are not affected in these cases. Where load current compensation is used — in case (2) — the transient monitor and load compensation calculation are added burdens to the relay computer. However, previous work in this field suggests that these computations introduce negligible delays in the distance relaying calculations.

Current differential relaying accuracy and timing considerations are quite different from those of a distance relay. In general, the accuracy considerations affect sensitivity of the relay rather than its reach. If a percent differential setting is chosen to account for transducer and sampling time errors, this translates into an insensitivity to low current faults or mismatches caused by weak taps. This is a feature of all differential relays.

Any communication delays translate directly into delays in relay response time. However, as differential relaying can be made fairly fast (between 1/4 and 1/2 cycles for all faults), a small delay (of about one sample time or about 1300 microseconds is not too critical.

Role of Communications:

In all adaptive schemes considered above except case (2), communication with remote stations is essential. In schemes (1) and (3) low band–width channels would be acceptable, as simple ON–OFF type information is to be communicated. In scheme (4) using current differential principle, a high speed wide–band communication channel is essential. Consider the communication needs of one of the remote terminals. Seven samples of 16 bit word length are generated every 1300 microseconds. If we assume that a multi–terminal line may have 5 terminals as a practical upper limit, the received signals at the relay location consist at most of

16x5x7 or 560 bits every 1300 microseconds. This corresponds to a communication speed of 430 kilobytes per second. In order to improve the relay response, one should try to get this to the relay computer within one tenth of the sample interval, which would correspond to about 4.3 Mbits per second. Fiber optic links should be able to accommodate this with ease.

Interactions with other adaptive and non–adaptive relays:

With the exception of the current differential relay – which constitutes an independent protection system — all other adaptive features described above are based upon a more accurate determination of fault location. Thus, the underreaching zones (zone – 1) will continue to underreach their respective boundaries while approaching the desired boundary more closely under various system operating conditions. Also, all the overreaching zones — zone 2 for example — will continue to overreach the desired buses and can be set more closely than is possible in a non–adaptive environment. In summary, the adaptive relays described above do not require any changes in other adaptive or non–adaptive relays with which they must coordinate.

2.1.2 Adaptive Relay Settings:

Objective:

Relay settings represent the ultimate synthesis of technology and art, fact and judgment. In every phase of the development of a transmission line protective scheme, a compromise is usually made between economy and performance, dependability and security, complexity and simplicity, speed and accuracy, credible vs. conceivable. It is, however, in the relay settings themselves that all of these compromises are focused. It is the settings which will transform the protective scheme from a concept to a reality and will allow relay performance to reach either maximum or minimum potential. The object of providing adaptive relay settings is to minimize the compromises that accumulate during the engineering process and allow the relays to respond to actual conditions and thereby optimize their performance.

Present Practices:

Relay settings are calculated from short circuit studies that include a wide variety of system configurations, generation schedules and reasonable voltage excursions. The user's setting philosophy and criteria establishes limits to provide maximum possible coverage in the fastest possible time. In the end, the settings are

the result of an engineer's judgment as to the best overall protection consistent with reliable system operation.

Adaptive Techniques:

Experience indicates that the relay engineer's judgment is, in fact, extremely effective. The notoriety associated with blackouts and the treatment by the popular media of such technically complex subjects as relaying tends to grossly distort the record. In practice, there are very substantial margins available and the compromises that must be made with protection are between performance that is either excellent or very good; not between performance that is adequate or marginal. When faced with such a choice, relay engineers have not hesitated to use sophisticated or unique solutions. The burden then might shift from the primary emphasis of excellent relay performance, which is not compromised, to a less desirable system involving additional equipment or complex circuitry. Digital devices, whose settings are resident in software, can automatically adjust to many changes in system conditions, and thus eliminate or reduce the complexities that might be involved.

The compromise most often noted involves multi–terminal lines. With such configurations the setting must assume the presence or absence of infeed or outfeed. This difficulty is discussed in detail in Section 2.1.1.

There are, however, several other conditions that, in extreme situations, would lend themselves to improvement by using the adaptive technique. These may be listed as follows:

Pre–fault Load — The positive sequence voltages and currents at the relay location are directly affected by load. Usually the effect is ignored. For long lines or heavy loads, however, this effect can be a problem. Overcurrent relays, either instantaneous or time–delay, must be set sufficiently above load and below fault current to allow for both dependability and security. Distance relay characteristics must not encompass the load impedance. The traditional solutions when this problem arises is to add voltage restraint, directionality or blinders. Digital relays can recognize the pre–fault load as a steady state condition and can include in their logic statements, the ability to ignore an unusually heavy load. Alternatively, the pre–fault load can be retained in memory and be included in the fault calculations.

Source Impedance Ratio (SIR: Ratio of positive sequence source impedance to positive sequence line impedance) — A high SIR results in a low fault voltage and, more importantly, a small change in voltage for a fault at one end of a line or

the other. The changes in SIR during normal system operation are usually well within the ability of a given relay setting to operate correctly. However, unusually large changes, which might accompany a wide–area disturbance, can result in fault voltages that are below the range of the relay. Digital relays can be programmed to shift the operating range of the A/D converters to accommodate such excursions.

Cold–load pickup — the phenomenon of cold–load pickup is well known and extremely difficult to resolve. It is usually a problem on subtransmission or distribution systems and is related to the increase in load current following an extended outage due to the effect of motor inrush and loss of diversity on such loads as home appliances. The common practice is to allow the instantaneous relays to trip once, remove them from service automatically and allow the time–delay relays, which have enough time to override the inrush time, to operate if a fault occurs. Digital relays can be provided with the intelligence to recognize a sustained outage and can adjust their settings to accommodate the increased load.

Line Charging and System Asymmetries — The effects of capacitance on overhead transmission lines depends upon the length of the line and the operating voltage. Normally this effect can be ignored in calculating relay settings. However, long lines have experienced line charging currents of sufficient magnitude to cause false relay operations of directional–comparison ground relays. This can occur when the relays are set with the necessary sensitivity for simultaneous tripping of both terminals on ground faults near a remote terminal. Phase comparison relays are also subject to misoperation if the line capacitance changes too much with operating voltage. On lines that employ shunt reactors, these reactors tend to reduce the zero sequence charging current on a steady state basis. However, at the inception of a fault, the electrical inertia of the reactors delays this effect for some time. This requires that in order to be secure during external faults a high speed FDH_H (Fault Detector High Set, High Speed) function must be set on the basis of no shunt reactors. Some short time delay after the fault, the shunt reactors become effective and a lower setting of the FDH (Fault Detector High Set) would be secure. Two FDH functions, FDH_H (subscript H meaning high speed) and FDH_L (subscript L meaning low speed) would provide security on external faults and high speed protection for severe internal faults with somewhat slower protection on minimal internal faults.

FDH_H must coordinate with FDL (this is a blocking Fault Detector Function, with a Low setting) on a transient basis during external faults, and so it

will not operate on charging current when a dead line is picked up. FDHL coordinates with FDL on a steady state basis.

Digital relays can reconfigure the logic to satisfy either condition. In addition, an untransposed line presents a higher impedance between the two outer conductors than between the middle conductor and either outer one. The apparent impedance, i.e. V/I, seen by the relay between the middle conductor and either outer conductor is not equal between phases at the same terminal or between relays on the same phase at the two ends of the line. Digital relays can take both the charging current and the asymmetry into account and make a setting that is customized for each relay.

Communication and I/O Devices — All of the measurements required to adapt the relay settings as discussed above are available at the relay location. There are no special I/O or communication requirements. The pre–fault load and voltages are continuously monitored by the digital relay. The line capacitance is a design quantity that can be adjusted for the real–time operating voltage. The SIR is the Thevenin impedance that can be calculated from the station phasor referred to a reference or can be transmitted from a state estimator located in a system control center. If we assume that the change in system configuration does not coincide with a line fault, then no stringent communication speed is involved.

Interaction with Other Adaptive and Non–Adaptive Protection:

All of the adaptive measures discussed above are in the direction to make the relay setting more precise; to more accurately locate the fault. To that extent, there should be no impact on existing non–adaptive relays. Since the non–adaptive relays were set with a less precise value, coordination should not be upset. If however, any relay setting is adaptively changed in the direction of longer time or longer reach, coordination with all other relays must be examined.

2.1.3 Series Compensation:

Objective:

A series capacitor introduces a discontinuity in the ratio of voltage to current as a transmission line fault moves from one side of the capacitor to the other. This has the effect of reducing the impedance seen be a distance relay since the capacitive reactance subtracts from the line inductive reactance. As a result, the fault may "fall out" of a distance relay characteristic and may even have the appearance of being behind the relay. With analog relays this discontinuity upsets the basic

premise upon which the relay design is based, i.e. the impedance to the fault is a measure of the distance along the transmission line and the fault currents reverse only for faults on the opposite sides of the relay.

Present Practices:

The usual solution to the problem of protecting a line with a series capacitor is to avoid using a distance relay in such a configuration.

Phase Comparison relays are immune to this negative impedance effect and are the usual protective relays selected. Since phase comparison relays do not offer inherent backup protection some form of distance or directional overcurrent relays is required. To allow these relays to operate properly a short time–delay (2–3 cycles) is introduced. This allows time for the protective gaps across the series capacitor to flash over, thereby shorting the capacitor and allowing the distance or directional overcurrent relays to "see" an inductive transmission line.

Adaptive Technique:

In view of the fact that the parameters and location of the series capacitor are known and fixed, the discontinuity in the voltage to current ratio can be factored into the impedance calculation made by a digital relay. Of course this accommodation can also be provided in analog devices by using blinders in a sophisticated and complex arrangement. However, the digital relay offers another level of flexibility by being able to adapt to the presence or absence of the series capacitor and adjusting its impedance calculation accordingly. This can be done by measuring the phase angle of the current through the relay. This angle will vary significantly according to whether the capacitor is in or out. The capacitor may be bypassed through its protective gaps automatically or manually through bypass switches for maintenance.

Input Output Devices:

The I/O devices will be unaffected by the provision for adapting the relay. All of the necessary parameters are already present.

Accuracy and Communication:

There are no accuracy considerations that will offer any difficulties to a digital relay. Phasor measurements to a fraction of a degree are practical. The effect of the capacitor on the phase angle is in the order of several or tens of degrees.

There are no communication requirements, since all of the measurements are made locally. This applies even to the situation when the relay is at one terminal and the capacitor at the other terminal or in the middle of the line.

Interaction with Existing Protection:

The presence of a calculation that includes the capacitor and an adaptive technique that recognizes whether a capacitor is in service or not, requires that the overall system coordination be reviewed.

Normally, phase comparison relays do not affect coordination since they act like a differential relay. The backup relays also are of no concern since the normal back up operating times are longer than the gap flashover and it can be assumed that the capacitor has been bypassed. An adaptive setting, however, will affect the zone and timing consideration of all of the distance relays that can "see" the fault.

If there are several lines with series capacitors and they are all provided with adaptive relays, then a fast communication channel would be useful in placing all of the appropriate information at all terminals.

2.1.4 Parallel Line Protection:

Protection Problems:

When two or more lines use a common right–of–way, zero–sequence current in one line influences all other lines. This phenomenon has been well understood for a long time, and the accuracy of ground distance relaying can be restored by using the zero–sequence currents in all neighboring circuits to compensate the effect of mutual inductances in the line being protected. The technique of zero–sequence current compensation is in fact an adaptive protection technique: a distance relaying function adapting to currents in neighboring circuits.

When the parallel lines are connected to common buses at both ends, certain complications arise which need further discussion. The problem of single phase tripping in such cases has been of some concern when such parallel lines connect a remote generating station to a load center. Consider the system shown in Figure 2.3. Protection at terminals 1 and 2 of the two lines provides high speed single phase

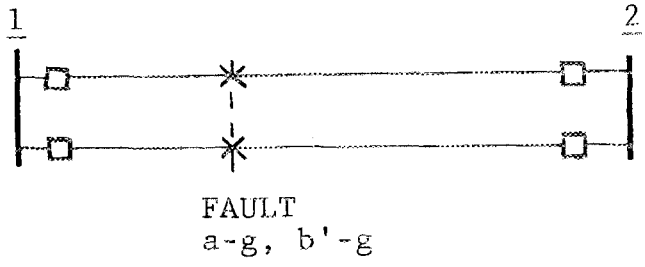

Figure 2.3

Single Phase Tripping of Parallel Transmission Lines

tripping in order to ensure system stability by maintaining a synchronizing power flow to the receiving system for all single phase faults. In many instances, a single phase to ground fault on one circuit leads to a simultaneous (sequential) ground fault on the neighboring circuit due to the possibility of backflash when tower footing resistance is high. Phase comparison relaying responds correctly to such faults — only the faulted phases are tripped. However, the high speed distance relaying in use as the second primary protection (or as a back–up system) may diagnose this fault as a phase–phase fault on both circuits, causing a three–phase trip, and a consequent loss of the generating unit — although correct relay operation would have tripped a single phase on each circuit, maintaining a three phase connection to the rest of the system. It should be noted that such faults are quite common — being the next most common fault after the single phase to ground fault. Single phase tripping and reclosing is far more prevalent in Europe than in North America, although it is finding increasing application in this country whenever system configuration justifies its need.

Objective:

The objective of the adaptive protection system for parallel transmission lines is to correctly identify the faulted phases and fault distance for all types of faults. Phase comparison relaying as well as phase and ground distance relaying for faults on a single line present no special problems. The major cases of concern are simultaneous faults on different circuits.

Adaptive Protection Technique:

Recent publications have addressed the problem of simultaneous faults on parallel transmission lines [1,2]. The latter study, dealing with computer relaying, reports a protection system incorporating many ideas which are adaptive in nature.

The first concept is to eliminate the effect of load currents in the relaying quantities. This idea has been mentioned repeatedly in this report, and is a powerful aid to sensitive relaying. It can be assumed that every current being used in the relaying decision is the fault component I_f

$$I_f = I_{new} - I_{old}$$

where I_{new} and I_{old} are the currents after and before a disturbance.

The key to correct single phase relay operation is the correct identification of the faulted phases. This can be accomplished by simultaneously considering the six phase currents of the two transmission lines. The reference cited shows that a secure identification of faulted phases is always possible for all types of faults on this

six phase system. It is shown that a considerable fault resistance can be accommodated in this technique.

The distance calculations must also be made on an integrated basis — all six phases must be considered in selecting the relaying quantities. Thus for double–phase to ground faults among the six phases (which includes the case of simultaneous ground faults on dissimilar phases on the two circuits), the delta currents must be calculated using the currents in the faulted phases:

$$Z_1 = \frac{E_x - E_y}{I_x - I_y}$$

where x and y may be any two of the six phases. The reference cited also identifies the range of zone–1 settings which may be used without the danger of overreaching when the lines are bussed at the receiving end.

As in the case of all distance relaying, the impedance measured from the remote end can be used to identify the fault location very accurately for the entire line length. The effect of fault resistance can be eliminated entirely. This aspect of the adaptive parallel line protection is shared by all other distance protection functions — and if invoked, requires high–speed data sharing between the sending and receiving end stations.

Input Output and Communication Needs:

The input output needs for this protection are very modest. In fact, when real–time data from the remote terminal is not called for, the currents from the neighboring circuit only are needed. Thus the input (and also output to breakers) are marginally more complex as compared to the needs of a single line terminal.

When data from a remote terminal is needed for relaying decisions, the input needs are similar to many other protective functions discussed previously, for example the the multi–terminal line protection function. Communication needs are also as discussed in that section.

2.1.5 Adaptive Security/Dependability:

Protection Problems:

It should be recognized that existing non–adaptive relaying schemes generally involve a compromise between security and dependability.[10] Dependability is a measure of the relaying equipment's ability to correctly clear a fault while security is a measure of the relaying equipment's tendency not to trip

incorrectly. By utilizing redundant relaying systems, dependability and security can be controlled. As an example, consider two independent protection systems protecting the same line. If either system can cause a trip (a parallel connection) then the combined system is more dependable. If both systems must operate in order to clear a fault (a series connection) then the combined system is more secure. Most backup and redundant relaying of transmission lines favor dependability.

The reason for the high dependability of existing relaying schemes is that the power system itself is highly redundant. Generally, the loss of a single transmission line will not affect the system's ability to perform its function. There are, of course, exceptions in radial systems and exceptions when the system is highly stressed. In a highly connected transmission system, the failure to clear a line fault will have severe consequences while a false trip may have no serious consequences especially if the system is lightly loaded. Dependability is at a premium compared with security in such situations. As lines are tripped or out of service, however, network redundancy is reduced and security becomes more of an issue. The failure to trip a fault in a radial system, on the other hand, is less serious and incorrect relay operation effectively disconnects the remaining system from the network. Security is more important in radial systems than in highly connected systems, although a balance between security and dependability must still be maintained.

A fixed (non–adaptive) relay has a given security and dependability which is a function of its type, construction and application. When such a relay is used alone, the relaying scheme has the security and dependability of the relay itself. If additional relays are employed in a redundant connection, then either the security or dependability is improved at the expense of the other. That is, the parallel connection of two relays will be more dependable than one relay but less secure, while the series connection is less dependable and more secure. Once a non–adaptive relaying system has been designed, its security and dependability are fixed and cannot respond to changing system conditions. The highly dependable relaying schemes used for the interconnected network may not be appropriate in all situations.

Present Practices:

To examine this concept, it is useful to look at two aspects of the protection system:

(a) Multiple Systems – Every protection system has some degree of redundancy. In the simplest case this will be a primary and a backup

system. Ideally they should be completely independent of each other. Practically, there are always some common elements such as the battery, trip coil or potential sources. In more sophisticated relaying systems, usually associated with high voltages, there may be 2 primary systems and 1 or more backup systems. In such systems, there are fewer common elements. The fundamental purpose of redundant relays and few common elements is to emphasize dependability. Either system will initiate a trip.

(b) Multiple Components within a System – To properly protect equipment against all possible faults, any relay system is composed of many elements. For example, there are usually relays connected to each phase and to ground, fault detectors, directional relays, communication inputs or multiple output devices. Some of the elements are connected to provide dependability and others to provide security. For instance, for dependability, every fault will be seen by 2 or more of the phase and ground relays and any relay will trip. Fault detectors and directional contacts are used for security. Transfer trip can be either direct, or supervised. Power line carrier is usually less secure but can be provided with cross–blocking features to increase the security at the expense of dependability.

Adaptive Opportunities:

It is possible with an adaptive protection philosophy to alter the security and dependability of the relaying scheme as a function of the system state (whether normal, alert, emergency, or restorative.) Particularly in the alert or restorative state it can be argued that security has more importance than in the normal State. Since it is the entire relaying philosophy that must be altered to change the security/dependability of the protection scheme, more than individual relay characteristics must be involved in the adaptation. It appears to be relatively easy to reconfigure the redundant systems from their normal parallel operation to a series logic.

It is not as obvious that the components with a system can be easily changed, although several possibilities suggest themselves for further study. The parallel relay logic can be altered to a series logic similar to the system changes above. Fault detectors can be reset to account for the lower available short circuit current. Directional elements may have to be reexamined to insure coordination as

the system equipment impedances change.

Because of the difficulty of maintaining relay coordination through the restorative stage, it may be necessary to calculate settings and define the reconfigured protection in advance, using the same physical hardware. One system (for use in normal state) would be more dependable while the other (for use in the alert or restorative state) would be more secure. This may be difficult in the presence of non–adaptive relays.

Communication Needs:

If two independent relaying schemes are used, the only communication needed is a signal to all of the affected substations and relays that indicates the system state. If a technique for gradual adaptation is developed then enough information must be shared between affected relays so that coordination is possible..

2.2 TRANSFORMER AND BUS PROTECTION AND CONTROL

2.2.1 Adaptive Percentage Differential Protection:

Objective:

Setting the pick–up and slope of a percentage differential relay for power transformer protection is at best a compromise. The slope and pick–up must be selected to account for current transformer (CT) mismatch and variable tap settings. In order to avoid improper operation under off–nominal turns ratios the relay is set so that some internal faults cannot be detected by the relay. The objective of an adaptive percentage differential relay for power transformer protection would be to adjust the pick–up and slope of the relay characteristic on the basis of external information about the tap setting to reduce the number of undetectable internal faults.

Protection Problems:

The details of the percentage differential depend on winding type (Y–Y, Y–Δ), and number (2 winding, 3 winding) but can be illustrated on the single–phase two–winding power transformer shown in Figure 2.4. Neglecting magnetizing current

$$N_1 I_1^1 = N_2 I_2^1 \qquad [1]$$

If

$$\frac{n_1}{n_2} = \frac{N_2}{N_1} \qquad [2]$$

then I_1 must equal I_2 under normal operation. Even if Equation (2) is valid at the

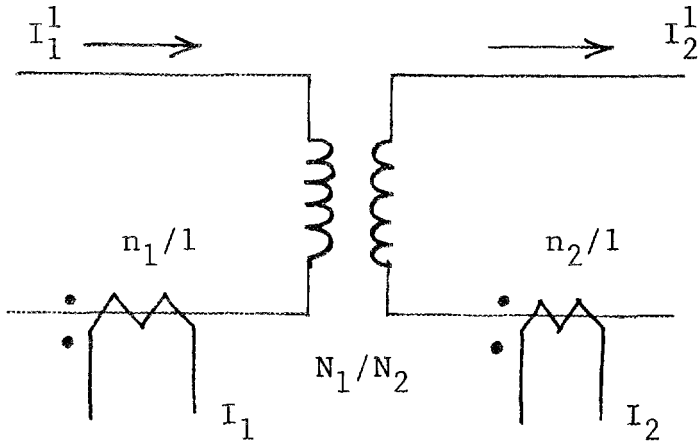

Figure 2.4
Single–Phase Two–Winding Transformer

nominal tap setting a change in tap setting will result in $I_1 - I_2$ not being zero under normal load or an external fault. To account for CT mismatch and off nominal turns ratios the percent differential characteristic shown in Figure 2.5 is used. Figure 2.5 is drawn for a 20% pick–up and a 20% slope. If N_1^0, N_2^0, n_1^0, n_2^0 represent nominal values then

$$I_1 - I_2 = I_1 \left[1 - N_1 \frac{n_1}{N_2} n_2\right] \qquad [3]$$

The dash line in Figure 2.5 is a locus of points for

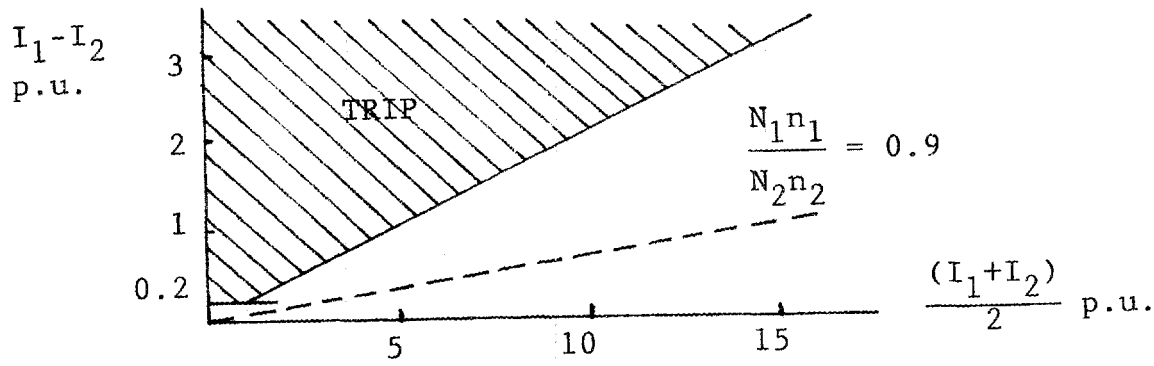

Figure 2.5
Percentage Differential Characteristics

$$N_1 \frac{n_1}{N_2} n_2 = .9$$

and an external fault.

While the percentage differential characteristic is effective in preventing misoperation on external faults when the tap setting is off–nominal, it makes the relay insensitive to certain internal faults. A partial winding internal fault would have the same effect as a change in the turns ratio. If only a small percent of the windings were shorted such an internal fault would be indistinguishable from a nonfaulted situation with an off–nominal tap setting.

The slope of the percentage differential characteristic must be large enough to account for CT mismatch even if there is no tap changing mechanism. The problem of CT mismatch can occur because equation (2) is not exactly satisfied even at the nominal values or due to residual magnetizing currents in the CT's as well as the different magnetizing and saturation characteristics of the CT's. The percentage differential relay must also contend with magnetizing currents which exist during energization or over excitation. Both of the latter situations are partially addressed using an additional harmonic restraint element on the relay. The magnetizing inrush current that can exist during energization is known to be rich in harmonics, particularly the second. Since this current flows only in the side of the transformer being energized it appears as a fault current to the relay. By obtaining the harmonic content of the current and restraining the relay when the

harmonic content is large such false trips can be avoided.

The magnetizing current that flows under conditions of over–excitation is also not a pure sinusoid but contains additional harmonics. Existing harmonic restraint differential relays for power transformer protection employ various combinations of harmonics to restrain against false trips due to magnetizing currents. A compromise is involved, however, since CT saturation for an internal fault can produce sufficient harmonic content to restrain incorrectly.

In summary, the selection of the pick–up and slope of percentage differential relays involves a compromise between false trips (due to off–nominal tap settings, CT mismatches and magnetizing currents) and an inability to detect part winding internal faults. The difficulty in existing relays is that the pick–up and slope are fixed and cannot respond to additional information.

Adaptive protection techniques:

A variety of adaptive techniques can be employed in power transformer protection depending on the amount of external information that is available to the relay.

(1) Adapt to tap position: By monitoring the tap setting and using the correct turns ratio in computing the trip and restraint currents a digital relay could use a smaller pick–up and slope than required when the tap setting is unknown.

(2) Adapt to excitation level: If voltages were available to a digital relay then the pick–up and slope could be reduced when voltages were below some threshold values. The pick–up and slope would be increased for high voltages when large magnetizing currents were present due to over–excitation.

(3) Flux restraint: If voltages were available the harmonic restraint could be replaced by a restraint based on determining that the flux was saturated [3]. Such a relay would be more recognizable as adaptive if the pick–up and slope also responded to the flux calculation.

(4) Remove harmonic restraint in steady state: In conjunction with (2) it would be possible to invoke harmonic restraint only during energization. That is, in steady state the only source of large magnetizing current is over–excitation. If harmonic restraint were removed then the problem of CT saturation for an internal fault would be solved.

(5) Estimate CT ratios: In conjunction with (1) and (2) it is possible to estimate the CT ratios so that the pick–up and slope could be further reduced. With the tap setting accounted for as in (1) and magnetizing current eliminated as a source of apparent CT mismatch as in (2) then CT ratios necessary to obtain a zero differential current can be estimated from past data available to the relay. The process can be understood by considering a collection of points on the percent differential characteristic of Figure 2.5 corrected for tap setting and including data for which voltages were within nominal ranges. If the CT mismatch were constant then the points would lie along a straight line such as the dashed curve.

(6) Variable speed/security: More severe faults (further from the boundary line in Figure 2.5) can be cleared faster than less severe faults (closer to the boundary line in Figure 2.5). In essence the relay averages more measurements if the data lies close to the boundary in order to be sure if there is a fault.

Role of Communications:

None of the adaptive transformer protection schemes involve extensive communications. All of the required inputs are at the substation level.

2.2.2 Adaptive Transformer Monitoring and Protection Based on Temperature Measurements:

Objective:

Large power transformers are equipped with winding temperature devices which alarm or trip a transformer if it is overheated due to a combination of load current and ambient temperature or a failure of the cooling system. It is, of course, desirable to avoid overheating the transformer which can be accomplished by increasing the cooling or reducing the load current. However, such action requires that the alarm or trip indicators must accurately reflect the limiting condition within the transformer and must adapt the set points to actual conditions.

Protection Problems:

The winding temperature devices indicate the top oil temperature plus an increment proportional to load. Typically two settings are used: one to start the cooling fans and pumps, and give an alarm; the second to trip the transformer. The settings consist of three factors: a replica circuit fed by a current transformer to

represent the load, a temperature device measuring top oil temperature which represents the heat generated by the windings and the ambient temperature, and a constant to account for the difference between the top oil temperature and the hottest spot in the winding. This constant is derived by the manufacturer and is based upon the transformer design and factory heat runs.

Adaptive measurements:

Replacing the top–oil temperature device with a microprocessor to determine the hottest spot temperature would result in several advantages.

The hottest spot temperature could be calculated using a mathematical model of the winding plus actual load, oil and ambient temperatures. This would replace the compromise constant that is needed at the present time.

If additional sensors were imbedded in the winding the accuracy of the calculation would dramatically increase. These additional readings cannot now be accommodated with the existing indicator but would present no problem to a computer.

Transformer maintenance would be improved by providing a history of the data thereby allowing closer correlation between load and temperatures, permitting an evaluation of the effectiveness of the cooling and load cycling. If the computed and measured winding temperature differ by too much and forced cooling is supposed to be working then an alarm that forced cooling is not functioning properly could be issued before it was necessary to trip the unit. If the winding temperature is increasing it is possible to compute how long it will take to reach limiting values and alarm in advance.

Temperature Adaptive Overcurrent Setting:

The overcurrent setting can be modified based on the existing winding temperatures and the ambient temperature.

Input Output Needs:

The input needs for both adaptive techniques are sampled values of winding and ambient temperatures. High accuracies are not necessary, so that a range of 256° could be covered with an 8 bit A/D converter with a 1°C accuracy.

Accuracy and Timing Consideration:

Because of the slower time constants involved much lower sampling rates are permitted for the temperature measurements.

Role of Communications:

No communications requirements exist for the adaptive techniques based on temperature.

2.2.3 Adaptive Bus Protection

Objective:

Existing bus protection schemes based on the principle of high–impedance differential relaying were developed to deal with the problem of CT saturation. The high–impedance technique depends on the physical connection of the CT secondaries. As such, it is difficult to deal with changing bus configurations. The objective of an adaptive bus protection scheme would be to adapt the bus differential inputs and outputs to the actual bus configuration including, for example, breaker by–passes.

Protection Problem:

High–impedance bus differential protection seems to have no direct digital counterpart in an integrated substation. The physical connections of CT secondaries in the high–impedance scheme is counter to the concept of shared data in an integrated digital protection system. It is generally assumed that line, transformer, and bus protection modules in an integrated digital protection system could, for backup or redundancy, share current samples. A digital implementation of bus protection appropriate for integration into the station protection system and suitable for adaptation would combine current samples in the computer rather than interconnecting CT secondaries. Some technique for dealing with possible CT saturation is required if the high–impedance principle is abandoned. The possibilities range from the classic solution of linear CT's with air gaps to modern electronic CT's. Other solutions include determining the CT core remanence of conventional CTs from past history and electronically returning the flux to zero or supplying the correct current measurements in the microprocessor. It is also possible that bus protection can be implemented in the first quarter cycle after a fault so that the CTs have not had time to saturate.

The problem of changing bus configuration is addressed using high–impedance bus protection by creating two or more zones. With changing bus and breaker configurations, however, it is sometimes necessary that zones be combined by actually altering the wiring of the CT secondaries.

Adaptive Protection Techniques:

Adaptive protection techniques can be utilized in a digital implementation of bus differential protection system where samples of current are algebraically combined and used in a percent differential scheme.

(1) Estimate CT ratios: As in transformer differential protection, it is possible to reduce the pick–up and slope of the percent differential if any existing CT mismatch can be reduced. Although many different CTs are involved in bus protection it is possible to estimate CT ratios if a sufficiently rich collection of past data is used.

(2) Adapt inputs and outputs: If the status of all disconnectors and switches were known, then the appropriate differential current inputs could be formed in the microprocessor for the existing bus configuration. In addition, the appropriate breakers to trip for the fault could be determined.

(3) Modify protection during switching: During the interval that switching is being performed to transfer breakers and CTs from one bus section to another, the protection could track the switching sequence so that the differentials are always balanced and the trip signals are communicated to the appropriate breaker(s).

Input Output Needs:

All three adaptive techniques require information about the status of disconnects, switches, by–pass breakers, etc. that determine the bus configuration.

Accuracy and Timing Considerations:

The switch status information must be accurate and timely to avoid false operations. In addition, as mentioned, some techniques of avoiding CT saturation or reaching a decision before CT saturation is needed if the high–impedance principle is not used.

Role of Communications:

None of the adaptive techniques require information from outside the substation.

2.3 SUBSTATION–WIDE PROTECTION AND CONTROL

2.3.1 Adaptive Reclosing:

Objective:

The primary objective of automatically reclosing circuit breakers following a fault is to return the transmission system to its normal configuration with minimum outage time of the affected equipment and the least expenditure of manpower.

In addition to the rapid restoration of service, the following benefits are generally achieved:

(1) It restores the power transfer capability of the system to its former level in a minimum period of time.

(2) It adheres to predetermined reclosing conditions such as hot line or hot bus requirements, energizing a bus from a limited short–circuit source following a bus fault, or energizing a transformer from a strong source to minimize overvoltages.

(3) It reduces the service interruption time to customers directly fed from the transmission line.

(4) It may relieve the operators from restoring service manually during storms or other widespread disturbances.

Present Practices:

Automatic reclosing can be High Speed Reclosing (HSR) or time–delayed, single–shot or multiple–shot, supervised or unsupervised.

HSR refers to automatic closing of a circuit breaker with no intentional time delay other than the time necessary to deionize the fault arc. All other reclosures are designated as time–delayed.

A typical reclosing sequence at a given terminal might consist of 1 HSR, usually unsupervised, followed by one or more reclosures supervised by dead line voltage relays. A successful reclosure would then permit the other terminal(s) to close, after a time delay, supervised by relays to check voltage and synchronism.

Some utilities employ 1 HSR, 1 time–delay and lockout; others allow 3 time–delayed reclosures and no HSR, or any combination in between. These sequences are determined by the individual user's experience relative to temporary faults, the availability of attended stations or supervisory control, the type of transmission network, the location of generating stations, and the overall system control philosophy.

HSR of transmission lines was introduced in the U.S. in the early 1930's as a means of reducing the investment for additional transmission lines or as an alternative to providing increased lightning protection. At that time, single lines

from point–to–point were common and system performance criteria permitted overtrips, relying on HSR to maintain some degree of circuit continuity. In present–day systems, a single circuit from one point to another is not usual, so HSR has assumed a different role related more to overall stability and reliability than to circuit continuity.[5,6]

Automatic reclosing is practiced throughout the world, based in a large measure, on the fact that approximately 80% of faults are temporary. There are, however, disadvantages to automatic reclosing of transmission lines that must be considered.

(1) Stability Considerations:

The adverse effect of unsuccessful HSR on system stability is well–known and many users prefer to forego its benefits to avoid this risk. However, stability may be threatened with 3–phase faults and not with single–phase faults, or with one particular line out and not another. As a result, complex interlocking schemes have been developed to permit, or to block, HSR, depending on the specific conditions.

(2) Generators:

In recent years, considerable research and analysis has been focused on the stresses in the shafts and components of turbine–generators due to switching operations. There is little documentation of actual damage to, or the failure of, turbine–generators as a result of switching or reclosing. The major concern centers on HSR. Initial studies [7] indicate that unsuccessful reclosing into a three–phase fault is a worst case condition with a probable loss of life in the rotational members of the machine. The closer the fault, the more severe the stresses. HSR into all other multi–phase faults is less severe and single–line–to–ground faults still less. Delayed reclosing allows the harmful transients to dissipate. Ten seconds is generally regarded to be sufficient to allow all oscillations to die out. In recent years, these concerns have resulted in a shift away from unrestricted HSR [8] in stations near generators.

(3) Transformers:

Reclosing into equipment such as transformers is not a general practice since such failures are not usually temporary and reclosing may escalate minor damage into a major repair. When a transformer is connected directly to a transmission line without a local fault interrupting device, a

transfer trip signal to trip and block reclose of the remote terminal(s) is required. A practice employed by many utilities uses both the differential relay and a pressure relay to control reclosing. If the pressure relay operates, it is an indication that either the fault is internal or of sufficient magnitude to cause movement of the coils. If only the differential rely operates, since the pressure relay is more sensitive than the differential relay, it can be assumed that the fault is external to the transformer tank and reclosing is permitted. A caution should be noted. A close–in external fault may produce enough mechanical forces to cause the windings to move, creating a pressure wave that will result in the operation of the pressure relay. In this case, reclosing would have been prevented. However, this is beneficial and the fact that the pressure relay has operated is sufficient to warrant an internal inspection of the transformer.

(4) Bus Faults:

Bus faults are not common, but when they occur, they have such a disrupting effect on the system that a delayed reclosure is very often attempted. A line to a source of small short–circuit current is permitted to reclose after a short time delay, typically about 10 seconds. If the circuit breaker remains closed, all other breakers are closed sequentially; if the "testing" breaker trips, all other breakers are locked out.

(5) Single Phase Operation:

Single phase operation differs from three–phase in that, at each terminal of the line, only the faulted phase is tripped and allowed to reclose high speed. The use of single–phase tripping and reclosing is widespread through Europe and is becoming more popular in the U.S. A major advantage of this practice is the fact that, for a temporary line–to–ground fault, the two healthy phases remain energized, providing synchronizing power and helping to support system strength. This scheme can also be safely applied when a plant is connected to the system through only a single transmission line. Three phase tripping would constitute a full–load rejection condition and reclosing must then be blocked to prevent faulty synchronization. Single–phase tripping and reclosing permits the unit to remain on line.

The problem encountered in single–phase tripping and reclosing involves the phenomenon of the secondary arc. For a phase–to–ground fault,

the two remaining energized phases will tend to reignite the arc path after the fault (or primary) arc goes out. This tendency increases with load, system voltage and transmission length. HSR would then probably be unsuccessful.

It is possible, and common in Europe, to simply delay HSR long enough so the secondary arc will extinguish itself due to wind or arc instability. In other instances, however, a sufficiently high current due to capacitance coupling may sustain the arc, or the required time delay may exceed the maximum time permissible to maintain system stability. In such cases, the capacitance of the transmission line can be compensated by shunt reactors.[9] If the line is untransposed, appropriate reactor switching for different fault conditions is required.

(6) Cable:

Automatic reclosing is rarely used on transmission cable since cable faults are usually permanent. However, if a transmission line consists of part overhead and part cable, automatic reclosing may be used, especially if the cable forms a small part of the installation. In some instances, separate relays may be provided for one or the other section, in which case sensing is available to block reclosing for the cable faults.

(7) Shunt or Series Reactor Compensation:

These are generally treated the same as transformers and when the reactor is known to be faulted reclosing is not generally applied. For transmission line faults a special situation exists with shunt reactors in that, together with the line capacitance, a resonant circuit is possible, resulting in an oscillatory decay of the trapped charge. This may take several seconds and may affect the fault in which case it will be necessary to delay HSR.

(8) Series Capacitors:

This equipment usually does not affect reclosing practice.

(9) Gas Insulated Substations (GIS):

It is the general practice not to reclose into a GIS to minimize contamination and burn–through. If a portion of the bus is included in the transmission line protection, however normal reclosing practice may be followed since the line would constitute the greater portion of the protected zone and restoring the circuit is the primary concern. If the GIS has separate protection, reclosing can be blocked.

(10) Motors:

Automatic high speed reclosing into a large motor that has been disconnected from the system can result in high mechanical stresses. It is usual, in such cases, to eliminate HSR and delay additional reclosing until the residual motor voltage is below 25% of normal and/or the residual voltage angle is less than 60 degrees. On smaller induction motors HSR may be beneficial in that production facilities are not interrupted.

Adaptive Reclosing Techniques:

Automatic reclosing presently embodies many of the concepts of adaptive control. Initiating HSR for first zone faults or blocking HSR for out–of–step conditions, blocking automatic reclose for equipment failures or for breaker failure are all commonly applied adaptive measures.

The use of digital techniques, however, greatly simplifies the implementation of adaptive controls.

(1) Type and Severity of Fault:

The most pervasive adaptive parameter is knowledge of the type and severity of a fault. If HSR is to be locked for close–in, multi–phase faults, or conversely, is to be permitted for remote single–phase faults, the location and identification of the fault type must be accurately known almost at the same instant as the trip decision is made. With present day relays this is not a trivial task. Since the tripping zone is not coincident with the restricted reclosing zone, a separate complement of relays is required.

With digital relays, the algorithm usually identifies the phase(s) and the distance when it makes a trip decision and it is a simple matter to convey this information to the reclosing logic.

In the application of single–phase tripping and reclosing, although the secondary arc phenomenon is not yet amenable to detection, the complication of accurately identifying the faulted phase and initiating a single–phase trip and reclose largely disappears with digital relays. In addition, an unsuccessful reclose or an evolving multi–phase fault must result in a three–phase trip. This again involves complex circuitry that is easily handled with digital inputs and software.

(2) "Hard" vs. "Soft" Circuit Breaker Operation:

Precisely controlling the closing or tripping impulse to a circuit breaker offers the opportunity to reap significant benefits in terms of system transients and circuit breaker maintenance. The ideal control scheme would be to have the circuit breaker

contacts in each pole individually open following a fault when the current in that pole was close to zero. This would result in minimum arcing time.

Similarly, it is desirable for the first pole of a de–energized line to close at the maximum of the bus voltage to minimize the d–c offset of short–circuit current in the event that the line is faulted. Subsequent poles at the same terminal can reclose at the minimum voltage across the breaker. This assumes that there is no fault on the remaining phases, a condition that can be determined prior to initiating the closing impulse on those phases. At the other terminals of the line, if there is no fault each pole should close when the voltage across the beaker contacts is a minimum. If there is a fault, closing can be inhibited by a similar analysis at the local terminal or a transmitted signal from the remote terminal.

To implement such a closing control scheme it is necessary to know the breaker characteristics as a function of temperature, the control voltage and other factors.

Two other advantages accrue from the ability to accurately control closing or reclosing:

(a) During a stable system swing, it is better to reclose a circuit breaker while the voltage phasors across the breaker terminals are approaching each other rather than separating from each other. This determination is presently made during off–line stability studies and a HSR time is selected that applies most of the time. By measuring the voltage phasors in real–time, this control strategy can be implemented for all situations.

(b) As indicated above, if each pole of a circuit breaker is closed independently, it is possible to design the digital logic to permit reclosing for a single phase–to–ground fault, or the unfaulted phase only in case of a phase–to–phase fault.

For a phase–to–ground fault either the high current or the low voltage will indicate that a fault exists. For a phase–to–phase fault the voltage on the energized phase and coupled voltage on the deenergized phase will be equal and in phase if a fault exists or show a large magnitude difference if no fault exists.

This control strategy would prevent ever closing, or reclosing, into a three–phase fault. System planning studies very often use the criteria of an unsuccessful HSR into a three–phase fault as the test of

an acceptable design. By removing the possibility of such an event, significant economies can be realized in transmission line configurations.

(3) Optimizing Circuit Breaker Wear:

Many high voltage transmission lines are configured in a breaker–and–a–half or ring–bus arrangement, providing two circuit breakers per line. Unless other constraints are present, it is advisable to rotate the HSR duty to equalize contact wear, compressor operation, etc. This is normally done by maintaining appropriate records and providing operators with selector switches. A local or remote computer can reassign this responsibility automatically by monitoring a great number of critical parameters. For instance, during a sleet or lightning storm, a line can be faulted many times in a very short period of time; each fault resulting in a successful HSR or delayed reclose. A computer can easily be programmed to alternate the HSR assignment or adjust the time delay to minimize the wear on the breaker, yet maintain system integrity.

(4) Additional Considerations:

Using information from all terminals, the first circuit breaker closing after a line fault can bias the protective relays to guarantee 100% line coverage by adjusting the setting for stub (open–end) conditions.

The present practice of 1 reclosing relay per breaker can be modified to 1 dedicated reclosing function in a station computer. It can perform intelligently on the total station condition. If there is adequate communication to adjacent stations, real–time status of remote equipment can be considered.

The station recloser can incorporate additional intelligence to prevent incorrect manual switching. Except for the simplest of configurations, interlocking the manual closing circuits of switches and breakers with electromechanical or solid–state relays is too complex to be implemented. However, the logic formulation of the switching instructions using digital relays accomplish this function.

The restoration of a system following a wide–spread outage can be disrupted by the action of reclosing relays that are set to operate under totally different system conditions. The restoration strategy may not be compatible with the normal hot line and/or hot bus selector switch positions that are proper for a normal system.

A possible enhancement to the station reclosing function would be a

centralized automatic reclosing function that takes into account the total system situation and can adjust the reclosing sequence and synchronizing parameters.

Input/Output:

In general, reclosing logic requires information on equipment status, breakers and switches open or closed, lines and transformers energized or deenergized. These indications are readily available from auxiliary contacts and potential sources. In a digital station, this information will reside in the protection modules. In many cases, the phasors across an open breaker are of interest. The computer can process the data better than present–day synchronizing relays by accounting for actual phasor speed and direction of rotation.

Communication Consideration:

With the exception of centralized reclosing, there are no stringent communication requirement associated with adaptive reclosing. The conditions affecting decisions relative to HSR are inherent in the initial decision to trip and the close/trip signals are in the same module. Time delay reclosing is in the order of seconds and so imposes no communication difficulties. A central recloser, however, requires fast communication channels and scan rates in the Data Acquisition System or State Estimator.

Interaction with other Adaptive or Non–Adaptive Relays:

Although reclosing is, in general, a coordinated activity, an adaptive recloser will not degrade the operation of non–adaptive reclosers. The logic used in adaptive reclosing can recognize the non–adaptive devices and take them into account.

2.3.2 Data Sharing:

Objective:

Data sharing is a technique for improving reliability and redundancy for all common data elements found in a substation protection or control system. The objective of sharing data between dedicated devices is to allow each device to continue to perform properly even though some analog or digital input or output information is lost.

Present Practice:

The amount of data sharing, today, is extremely limited. The usual practice is to provide redundant or back–up devices with completely independent data paths. High voltage protective equipment usually has separate current and potential transformers, individual interlocks and dedicated wiring. Some degree of

sharing is obtained through the use of auxiliary transformers or relays but each device usually is connected to its own input sources and output circuit.

A measure of data sharing is provided in a system control center through its state estimation techniques. If bad data is identified, calculated values are often substituted to maintain the integrity of the system configuration.

Adaptive Techniques:

It is obvious that the behavior and general operation of an electrical system can be improved by a better use of data exchanges between devices within a substation and between a substation and control center.

This concept of data sharing introduces a totally new, and potentially powerful, technique to enhance the reliability of protection and control. Although it is possible to implement data sharing with existing analog equipment, this is accomplished at the expense of reliability and simplicity. However, a digital device, can discover than an input (e.g. current, voltage or breaker status) is missing, while it is executing a self–diagnostic program. It is then possible that the missing data can be supplied from another module. Should an output device become inoperative, the instruction can be rerouted to a similar functioning output module.

Figure 2.6 shows a single bus arrangement with 3 elements. This is overly simplified for illustrative purposes. The current transformers (CT) and relays, however, represent typical applications for an analog system. Each circuit breaker (CB) as 3 bushing type current transformers (BCTs) to provide redundant line and generator protection and to provide isolation between the protection functions.

If any of the CT secondary wiring experiences either an open or short circuit, the current input to the relay is lost. As a result, the line relays will not operate when a fault occurs and the differential relays will operate incorrectly or fail to operate depending on the magnitude of load current or location of the short circuit. This condition is reluctantly accepted today because the remedy is to use auxiliary transformers and complex monitoring equipment and circuitry. This is considered to be more harmful than helpful and degrades the overall reliability.

All of the current transformers (CTs) on a given breaker see the same primary current regardless of the specific application of the secondary current. Therefore, within a given set of CTs, any current can be used to replace any other. Care must be taken, of course, to use the correct direction of current flow in each secondary winding and to rescale the digital current for the correct magnitude.

The same concepts apply in the more usual, although complex, station confi–

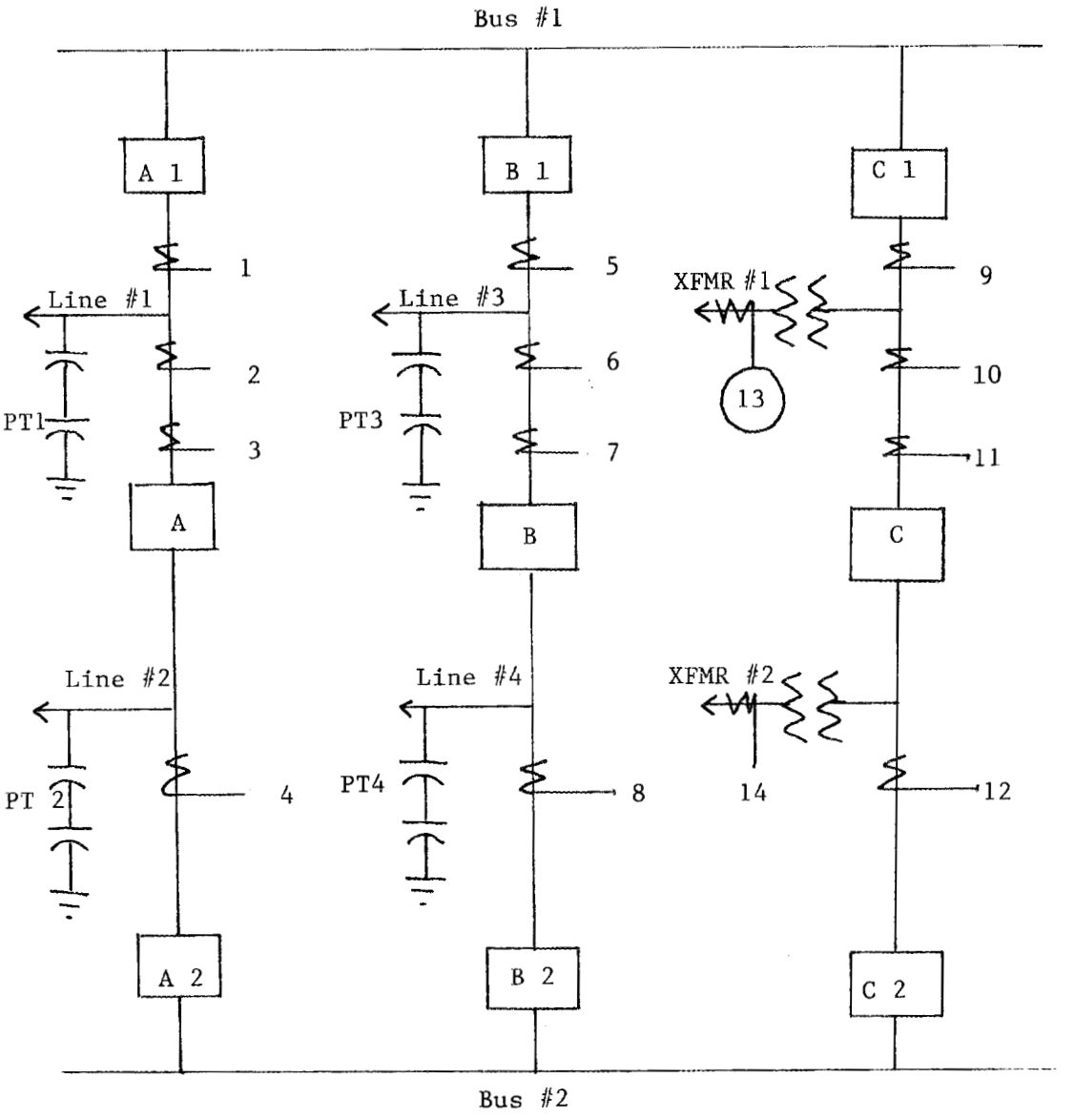

Backup for 1 = 5 + 9

Backup for 2 = 3

Backup for PT1 = PT2 or PT3 or PT4
(assuming the appropriate breakers are closed)

Figure 2.6
Analog Data Sharing for Breaker and a Half Scheme

guration shown in Figure 2.6. The one–for–one substitution of current within a set of CTs on one breaker is obvious and assumes that only one secondary current signal is lost. It is also possible with free–standing CTs, to lose all of the CT cores. To reconstruct the missing breaker current may require all of the current flows from the remote terminals plus logic routines involving breaker status. For example, if Breaker A1 loses all of its current, the magnitude of the current through Breaker A1, for a Line 1 fault, can be calculated from (4) and (7) or (5) and (8) and through Breaker A1, for a Bus 1 fault from (10), (11), (12) or (13) and information from the remote terminal of Line 1. The location of the fault however, cannot be determined until Breaker A1 trips.

Voltage signals are relatively easy to verify and replace, provided the logic input includes the appropriate status. For example, on Figure 2.6 (15) or (14) are identical if CB A is closed. Conversely, breaker status can be determined by current and voltage signals without resorting to auxiliary switch contacts which are the most common source of failure.

This concept of data sharing suggest that the use of digital relays can introduce dramatic changes in station design. If one CT can provide the breaker current required for a number of functions, and one or more CVTs (capacitive voltage transformers) can be eliminated, then significant reductions in material, costs and installation can be realized. Sufficient CTs and CVTs must still be provided to achieve redundancy, but the separation of functions presently achieved by using separate secondary windings, can be achieved in digital hardware and software. Redundancy can be obtained through the data sharing techniques just described.

It is recognized that the cost of multiple secondary windings on a free–standing CT core or additional bushing current transformers is small compared to the cost of the primary equipment. Nevertheless, secondary wiring, cable and switchboard wiring must be installed, checked and maintained and these costs are not insignificant. Auxiliary switches are difficult to keep in adjustment and are prone to failure and the circuit using such switches is complex. Minimizing their use will simplify testing and increase the reliability of the protection and control.

In addition, to the exchange of information between digital devices in a substation, there is also the ability to exchange data between substations or between a substation and a control center. In such cases, the type of information is unique. It has already been indicated that bad data can be replaced with calculated values.

The difficulty often is that bad data is not easily identified. There are several parameters that are related, e.g. kW/kvar and voltage angle, that can be used to identify bad data at the local level and prevent transmitting such data. There are other configurations where data at several substations will be available to fill in missing data.

Input/Output Needs:

The concept of data sharing requires that the data samples be synchronized and that the data preparation (mimic, filtering, etc.) be similar or compatible. This is not a trivial or inexpensive task but can be accomplished through hardware or software techniques. It means that the intent to share data must be recognized in the early stages of design and be factored into the overall station design.

Communication Needs:

Within a substation, the ability to share data requires that the modules be connected with channels of the same speed as those used for the original data. This is not a difficult task inasmuch as the sharing modules are pre–determined and directly connected.

From substation to substation, or substation to control center, the speed of communication depends on the use of the data. The question of dynamic state estimation is addressed in Section 2.4. If the substitute data is to be used in normal state estimation programs then no special communication speeds are required.

2.3.3 Breaker Failure:

Objectives:

The primary objective of a backup protective scheme is to open all sources to an uncleared fault on a system. The term "Breaker Failure" is a common expression that covers the failure of any element in the protection chain, including, but not exclusively, the circuit breaker itself.

To do this efficiently the breaker failure scheme must

(1) Recognize the existence of all faults which occur within its prescribed zone of protection.

(2) Initiate the tripping of the minimum number breakers necessary to clear the fault.

(3) Operate fast enough to maintain system stability, prevent excessive equipment damage and maintain a prescribed degree of service continuity.

The settings of the various relays required to implement this scheme are, as usual, based upon perceived reasonable scenarios to maintain the balance between security and dependability. They are therefore candidates for adaptive control to allow the settings to change with changing system conditions.

Present Practices:

References [11,36] describe the concepts and practices associated with remote and local backup protection. Reference [12] introduces a novel circuit to adapt the breaker failure timing to the type of fault i.e. a short time for 3–phase faults and a longer time for single–phase faults or if 2 circuit breaker poles open successfully.

In general, remote backup is inadequate for modern systems and has been relegated to a minor role in the overall protection package. Local backup, or circuit breaker failure, depends upon current detection, rather than circuit breaker auxiliary switches, to establish that a fault still exists, and a timer that must allow the primary breaker to clear the fault and all protective and auxiliary relays to reset and still provide a margin to clear faults within a defined critical switching time. The output of the breaker failure tripping relay is directed to all breakers required to clear the fault. This involves local trip signals within the station associated with the failed equipment and may require transfer tripping of remote circuit breakers.

Adaptive Techniques:

Reference [11] lists the following 6 factors that affect the breaker failure timer setting.

(a) Calibration and maintenance of relays.

(b) Condition and voltage level of battery.

(c) Repeatability of breaker failure timer.

(d) Effect of fault magnitude.

(e) Output of current and potential transformers.

(f) Weather.

Of these 6 factors, only the effect of fault magnitude and type of fault is of major impact and it is amenable to adaptive treatment. Reference [12] describes a hard–wired circuit to make the time responsive to the phases involved. A digital relay can adjust the timer as a direct consequence of the fault current magnitude, regardless of the number of phases faulted or the operation of a circuit breaker. The remaining factors have marginal effect on the performance of the equipment.

Other factors that affect the primary breaker clearing time, therefore the breaker failure time, are:

(a) Minimum fault currents.

(b) Inserted circuit breaker resistors.

(c) Retrip directly after a close.

Once again, the logic associated with a digital relay can recognize these factors and adjust the timer accordingly.

The setting of a non–adaptive current detector is particularly subjective. It is desirable to set above load current to keep the breaker failure circuit "disarmed" during normal operation yet the setting should be low enough to pick up for all faults. If circuit breaker resistors are used, the setting (or the timer) must take this into account. In a ring bus, or in a 1 1/2 breaker configuration, for a fault on the line, one breaker may see a small faction of the fault until the second breaker opens. This could delay the start of the first breaker failure timer by a time equal to the interrupting time of the second breaker.

Digital relays can incorporate load current in their logic and keep the trip circuit "disarmed" until a transient monitor or fault detector operates. This would permit a lower setting to detect minimum fault currents or reduced contribution. Similarly, the resistor current can be tracked until the resistor contacts open and the tripping circuit would be continuously responsive to the conditions at every instant.

It is also possible to redirect the trip outputs to cover any abnormal switching arrangements. This may, perhaps, have its widest application when remote tripping is required. A study of the usual station designs, however, does not indicate any advantage over the usual interlocking that would be associated with such an arrangement.

Input/Output and Communication Needs:

The input/output needs to implement adaptive local breaker failure are resident in the protection module or at the breaker location. If the reclosing function is included in the protection module, then there are no additional wiring requirements. If there is a separation between the protection and control modules, then a slow speed data highway will be required.

2.3.4 Capacitor Banks

Objectives:

The protection of high voltage capcitor banks must consider 3 contingencies, the last 2 of which are related and may have conflicting requirements.

1. Fault between the capacitor bank and its circuit interrupting device: This is a straight–forward protection situation and is implemented in the usual manner. A partial bus differential is commonly used in which the capcitor bank is not included in the differential zone. The differential relay is then set above the steady state unbalance and will operate for a fault up to, but not including the capacitor bank. A simple overcurrent relay can also be used. It should be noted, however, that with either the bus differential relay or the overcurrent relay an instantaneous relay is not applicable in view of the presence of inrush current when the capacitor bank is energized.
2. Failure within a series unit: This is usually a dielectric failure within a "can", reducing the impedance of the failed series unit, thereby increasing the current and causing the proective fuse to blow.
3. Effect of a failed capacitor unit on the remaining units: As units are removed, the impedance of the entire parallel section is increased. However, since there are many sections in series, the effect of increased impedance in one section does not decrease the phase current in the same proportion. The result is a higher voltage across the remaining units in that section. The higher voltage, in turn, will result in higher currents and more individual fuses blowing, cascading the entire capacitor bank out of service. The usual practice is to size the fuses so 2 blown fuses will not result in a cascading action.

A neutral relay should be provided to detect one or two blown fuses and trip the circuit interrupting device to prevent cascading or to alarm so maiintenance personnel can replace the failed unit. There are coordination problems associated with the neutral relay. The objective of adaptive protection is to elminate these coordination problems.

Present Practice:

There are 3 capacitor bank configurations that must be considered.

(1) A double–wye bank in which a neutral CT and current relay is connected between the neutrals of both banks.

(2) A grounded wye bank with a CT in the connection between the neutral and ground. A resistor and voltage relay is connected across the CT.

(3) An ungrounded wye bank with a PT connected between the neutral

and ground. A voltage relay is connected across the secondary of the PT.

The function of the relay is the same in all 3 configurations, i.e. to detect a neutral current or voltage that is proportional to the loss of one or more series units. The relay will operate if the loss of the next unit will result in damaging overvoltages on the remaining units.

The problem with existing relays is in the sensitivity required. Normal unbalances as a result of manufacturing tolerances or ambient temperature are the same order of magnitude as the loss of one or two units. A problem also exists in that the fault sequence has 2 opposing effects on the capacitor bank neutral. When a capacitor unit shorts, the current through that unit increases, eventually blowing the protective fuse. While the unit is shorted, however, the neutral shifts to reduce the associated line to neutral voltage. When the fuse blows, the curernt decreases and the neutral voltage reverses itself. The initial neutral shift is a constant, in phase with the voltage across the capacitor, and sufficient to pick up a neutral relay. The interrupting device should not be tripped at this time since the fuse has not blown and the failed unit cannot be identified. The neutral shift when the fuse blows is 180° from the previous position and is proportional to the number of blown fuses. The coordination problem is to differentiate between the two situations.

Adaptive Techniques:

For a double–wye bank the phasors representing the neutral currents that would flow as the result of the removal of faulty units extend in 6 different directions. Existing relays operate on the resultant of these phasors without regard for the particular phases involved. If, however, there are three units removed, each in a separate section, the resultant will be enough to cause the relay to operate even though the actual overvoltage is not excessive. If an adaptive realy can recognize the component phasors, the relay can be prevented from operating.

In a single–wye bank, grounded or ungrounded, a relay that can differentiate beteen the two phasors represented by the short and the open condition can operate an alarm on the former and trip on the latter.

2.4 SYSTEM WIDE PROTECTION AND CONTROL

2.4.1 Detection of Instability:

Objective:

Detection of instability in power systems is not a relaying function. However, many relaying functions (load shedding, for example) depend upon the premise that given the current state of a power system, it will remain stable following a transient oscillation. Conversely, the out–of–step tripping function is based upon the premise that the post disturbance system will be unstable. If a developing transient could be judged to be either stable or unstable, then the operation of such relays could be made to adapt to this judgement. Thus instability detection becomes a precursor of the adaptive relaying process.

Another special feature of the problem of instability is that this problem is extremely difficult to solve for all possible states of a typical power system. In fact, in the sense of real–time detection of instability, the problem is unsolved at the present time. However, in a system having a simple structure, some progress can be made. This simple problem is addressed in this section in order to identify the features of its real–time solution. It is probable that power systems with more complex structures will require solution techniques with similar features.

Instability Detection in Simple Systems:

In a power system consisting of two synchronous machines and a connecting network over which synchronizing power can flow, the problem of instability detection can be solved in real–time. Equal area criterion is applicable in this case, and if the machine rotor angles and speeds can be measured in real–time a prediction algorithm can be developed for the detection of instability. Although this system structure is much too simple to be of practical use, some of its variations are often found in real systems. When ac power is imported over relatively long distances, so that both the sending system and receiving system consist of groups of coherent generators, one of the modes of oscillations of such a power system is that of a two machine system. Similarly, when a single machine or a single plant is connected to a strong system, the modes of oscillation of the single machine or plant are similar to those of a simple two machine system.

Real–time measurements must be obtained from various buses and transmission lines of the interconnecting network. Rotor angles, rotor speeds, and the internal voltages of the two machines (real or equivalent) must then be estimated from these real–time measurements. When the interconnecting network is complex, the task of placing the measurement points around the network is not trivial. In general, measurements of current and voltage phasors should be sufficient. Each of

the real–time phasor measurements will make a contribution to the internal voltage phasor of the two machines. Thus a distribution–factor matrix D can be determined such that

$$\begin{bmatrix} E_1 \\ \delta_1 \\ \\ E_2 \\ \delta_2 \\ \\ \end{bmatrix} = \begin{bmatrix} \\ \\ D \\ \\ \\ \end{bmatrix} \cdot M$$

where M is the measurement vector of all phasors, and (E_1,δ_1) and (E_2,δ_2) are the complex internal voltages of the two equivalent synchronous generators.

The matrix D must be evaluated off–line. If a significant portion of the connected loads depends non–linearly on their bus voltage and frequency, D will be a Jacobian matrix of partial derivatives. However, in all likelihood, D can be assumed to be fairly constant. Each column of the D matrix may be stored at the location where the measurement is obtained. One could thus visualize sending to a central location the contributions made by each substation measurement set to $(E_1,\delta_1,E_2,\delta_2)$. Alternatively, the measurement itself could be sent. Sending the internal voltage contributions would be more economical at a substation where more than two complex (four real) measurements are made.

It should be noted that the D–matrix would change if some measurements become unavailable or if some structural change occurs in the network. It may thus be necessary to store in each substation several versions of the D–matrix based upon various assumed lost data scenarios. If the system structure changes, these D matrices must be updated to reflect system changes.

Input Output Considerations:

It is clear that detection of instability is a task to be performed at a central location. Consequently, all data must be transmitted from substations where measurements are made to a chosen central location. The measurements are phasors and either the phasors, or their contributions to the Thevenin phasor voltages of the equivalent generators must be sent to the central computer. In any case, these are digital data, and input needs of this procedure are confined to digital data transmission from remote locations.

It should also be realized that the phasor measurements must be made on a common time reference. Thus, synchronizing pulses must be made available at each

substation. This may be done by transmitting synchronizing pulses from the central location where instability detection is performed.

In terms of output considerations, all the outputs will consist of digital control signals for relays at various substations. These would be blocking signals for some relays and tripping signals for others. Also, load shedding relays would be controlled from such a system. Any other stabiity–enhancement controls — such as fast valving, dynamic brakes and HVDC systems — that can be used for controlling developing instability would also receive signals from this function.

Role of Communications:

The central function of instability detection is based heavily on the ability to communicate with substations. Consider first the data rate which must be accommodated at the central computer interface. Since fastest stability swings may have a frequency of approximately 2 Hz, it may be necessary to have as many as 10 measurements of machine states in a quarter cycle of this oscillation to produce good instability prediction. This corresponds roughly to a snap–shot of system measuremetns every cycle of the power frequency (16 milliseconds). At an interval of 16 milliseconds either the measurements of voltage and current phasors, or the computed contributions to the equivalent generator internal voltagess (4 quantities) must be communicated to the center. If the center is getting data from 10 key stations on the system, this corresponds to a data rate of 10x4x16 bits in 16 milli–seconds. Thus, allowing for data acquisition and computation by the central computer, a data handling capabiity of 10 times this rate — or about 400 kb/second is indicated. If the power system oscillation frequency is lower than the assumed 2 Hz, this rate would go down proportionately. If more stations contribute data to the center, higher rate of data handling capability would be needed at the center. The communication channel capacity needed between the central computer and each of the remote transmitting stations is or the order of 40 kb/seconds. (Assuming 10 transmitting stations). This is also the data rate at the computer interfaces in the transmitting stations.

The data flow in the reverse direction for controlling the relays would require much lower band–width. If a synchronizing clock pulse is tranmitted to each station, it would require the highest band width channel. In fact, in all likelihood, zhe synchronizing pulse would require a dedicated fiber in a multi–fiber link.

Interactions with Other Adaptive and Non–Adaptive Relays:

As the instability detector assumes a system configuration to remain

unchanging during the prediction interval, it is imperative that all other relays be inhibited from tripping on out–of–step detection. Thust the adaptive instability detection device cannot function in conjunction with devices that are non–adaptive. Of course, this restriction is relevant to critical facilities only: any line that is not significant to the flow of synchronizing power for the given disturbance may be left non–adaptive. It is thus necessary to determin key facilities as a preliminary step, and then include all of their protection and control in the adaptive system. Similar considerations apply to the load shedding relays also.

2.4.2 Load Shedding and Restoration:

Objective:

The objective of a load–shedding program is to preserve the power system when it suffers from insufficient generation. If such a system forms an island, the system frequency will decay until there is a balance between the (reduced) frequency–senstive load and the generation. If this balance point occurs below a frequency at which continued operation of generators is not possible, the generators must trip, leading to a collapse of the islanded system. A load shedding program aims to reduce system load in a controlled fashion such that the frequency decay is arrested before the generator operating limit is exceeded. In an islanded system, the frequency itself is the actuating quantity used for load shedding.

A load restoration program returns the load that has been removed by the load shedding program after the generation deficiency has been made up. Once again, the load restoration is governed by the system frequency.

As adaptive load shedding and restoration program should overcome some of the shortcomings of the existing schemes discussed in the next section.

Present Practice:

General deficiency is a system–wide problem. Local frequency change is a local manifestation of this system–wide phenomenon, and often it may reflect the generation shortage faithfully. When the system is not islanded there is no significant frequency decay, and consequently automatic load–shedding equipment will not function in this case. It should be noted that the Area Control Error (ACE) in the automatic generation control system does reflect this generator deficiency accurately even when the system does not form an island.

Automatic load restoration practices vary among utilities: some utilities

may start restoration at frequencies below 60 Hz, others may start it at 60 Hz. Some companies may first restore the load tripped in the first load–shedding step; others may begin restoration with the load tripped in the last load–shedding step. In all cases long time–delays (30 second delays are typical in one company) are included in the restoration steps in order to avoid oscillations (or 'pumping') of load–shedding and restoring relays.

When the system interconnection is established after load–shedding has brought the system frequency to its normal value, the load restoration relays may pickup all the disconnected load at once, and as a result may overload the tie–lines. Once again, the present practice is to restore load in small steps with adequate time delays so that spinning reserve is able to respond in time. The load–shedding and restoration relays may be supervised by under–voltage and under–current relays, and are often locked out if any evidence of an oscillation between restoration and load–shedding steps occurs. If so, the restoration must be under manual or supervisory control.

Technques for Adaptive Relaying:

The first step in an adaptive relaying scheme would be the determination of generation shorage, whether the deficient system has formed an island or not. When the system remains interconnected, the area control error is an accurate measure of the generation deficiency. Assuming that the bias setting B is equal to the combined governing characteristic of the system, the system generation shortage is equal to ACE[31],

$$\mathrm{ACE} = \Delta\mathrm{T} - 10\mathrm{B}\Delta\mathrm{F}$$

where ΔT is the tie flow deviation and ΔF is the frequency deviation. With frequency essentially remaining unchanged for the interconnection, ΔT would measure the generation short–fall. Recall that when load–shedding is called for, the load frequency control system at the control center and at the generating plants is turned off. Nevertheless, the ACE signal could still be monitored in order to determine the system generation shortage.

When the system is an island, the system frequency will decay when a generation shortage occurs. In a dynamic system, local frequency at a substation may not correctly represent the speed of an equivalent machine rotor representing all the generators in the system. Consider a set of frequency and rate of change of frequency measurements made at several locations around the system. If (f_i) and $(\frac{df_i}{dt})$

are the measurements at bus i, the system equivalent parameter f and $\frac{df}{dt}$ can be evaluated as:

$$f = \Sigma \alpha_i f_i$$

$$\frac{df}{dt} = \Sigma_i \beta_i \frac{df_i}{dt}$$

where α_i and β_i are weights associated with measurements at bus i. These constants would be evaluated in an off–line study and stored for on line use.

A knowledge of f and $\frac{df}{dt}$ over an interval is sufficient for the evaluation of generation shortage. If the frequency drops at an average rate of $\frac{df}{dt}$ over an interval f_1 to f_2, the per unit excess load ΔL is defined as:

$$\Delta L = \frac{\text{Load–Generation}}{\text{Generation}}$$

and is given by

$$\Delta L = -\frac{H}{p}\frac{df}{dt} f_1^2$$

where H is the equivalent system inertia constant, and p is the power factor rating of the machines. Notice that with a decaying frequency, $\frac{df}{dt}$ is negative and ΔL is positive indicating an excess of load. An on–line evaluation of ΔL also correctly represents any reduction in system load caused by a drop in frequency.

Having determined the amount of generation deficiency, load shedding of the appropriate size could be initiated at once by sending trip signals over a supervisory control system to the substations where load shedding assignments have been made. This should lead to a more precise control of frequency decay and recovery, because the load shedding decision is made without waiting for local frequency to drop to low values. This load–shedding strategy would also work when no system island (with generation deficiency) has been formed.

Load restoration should be done in steps such that (a) no oscillations with the load shedding relays takes place and (b) no overload of tie lines occurs. Since the adaptive system makes decisions about load shedding and restoration at the center, the likelihood of oscillations is eliminated by exercising proper logic. As far as the tie–line overloads are concerned, it would be possible to predict the effect of a restored load upon a given tie–line before the load is actually connected. This is similar to an approach which uses generation–shift factors to assess the relief of contingencies. If the load is being picked up at bus p, its effect upon the flow in

tie–line l–m is given by

$$\Delta P_{lm} = S_{p\ lm} \cdot \Delta L_p$$

when ΔL_p is the restored load at bus p, ΔP_{lm} is the change in flow in line l–m, and $S_{p\ lm}$ is the load shift factor. If the resulting incremental tie–line flow causes overload in the line, the load restoration would be inhibited at bus p until such time that the loading on the affected tie–line is brought down by increase in generation in the system. As before, the load shift factors can be calculated off–line and stored in the central computer for on–line use.

Input/Output Needs:

The basic needs of the proposed adaptive system consist of communication capability between various substations and the center, and between the center and the load shedding and restoration equipment. In terms of hardware, this equipment is similar to the supervisory control equipment now in use on many systems. The need to measure precise frequency and rate of change frequency may call for recently developed frequency measurement techniques based upon recursive phasor calculations. The ACE signal needed is identical to the one now in use in most automatic generation control systems.

Accuracy Considerations:

The accuracy of an existing ACE calculation should be adequate for the present purpose. The frequency and rate of change of frequency should be very precise. The recursive phasor technique of frequency measurement can furnish accurate frequency measurement to ± 0.001 Hz, and as this technique also uses positive sequence voltage phasors, this way of measuring frequency is to be preferred over others using zero–crossing of single phase voltage signals.

Timing Considerations:

There are usually no crucial timing considerations in load–shedding and restoration tasks. Time intervals of several cycles or even seconds exist between various decision stages in load shedding and restoration and fairly low bandwidth communication channels would be acceptable for this task. The computations indicated in the previous sections call for real–time processing of data at modest speeds, and a dedicated microprocessor at the center should be able to handle this task.

Feasibility:

The feasibility of adaptive load shedding hinges upon the availability of

supervisory control channels to the load–shedding and restoring relays. When supervisory control is not available for the case of an islanded system, and estimate of generation shortage over the entire system can be obtained by assuming the f_i and $\frac{df_i}{dt}$ measured at station i to be the system quantities. Each station can then determine its contribution to the total load shedding effort through pre–stored participation factors. This scheme — although not the best possible — would obviate the need for supervisory control channels and could be the first step in the direction of adaptive load shedding systems.

Interactions with other Adaptive and Non–adaptive Functions:

The centrally directed load–shedding and restoration system can function with other systems based upon frequency relays. As these systems shed load, their influence would be perceived by the central system, which would call upon appropriate amounts of load to be shed so as to make up the entire deficiency. In the restoring step, it would be desirable if the system was entirely centrally directed.

2.4.3 Out–of–Step Blocking, Tripping and Islanding:

Objective:

The objective of out–of–step relaying as it is applied to generators and systems is to eliminate the possibility of damage to generators as a result of an out–of–step condition; and, in case of the power system, to supervise the operation of various relays such that when a system separation is imminent it should take place along boundaries which will form islands with matching load and generation. The problem of determining an out–of–step condition of a generator is relatively straight forward. To do so, it is sufficient to use currents and voltages at the generator terminals as relaying quantities. On the other hand, in case of the power system, — although an evolving out–of–step condition can be detected — determining the appropriate tripping and blocking strategy for self–sufficient island formation may be difficult.

The present practice is to pre–determine points at which system separation should occur and effect the separation based upon local measurement. Out–of–step tripping is enabled at these points, and it is blocked at other locations where out–of–step swings are likely to enter the relay tripping zones. As with other pre–determined conditions of this nature, it is not possible to anticipate all

contingencies while making planning studies, and as a result the action taken by the out–of–step relays may not be suited to the prevailing system conditions..

The objective of the adaptive protective system would be to take into account the actual system conditions, and to control the behavior of critical relays such that appropriate island systems with matched load and generation are created.

Adaptive Techniques:

The basis for an adaptive protection strategy would be on–line determination of system instability. As mentioned in an earlier section, the problem of determining whether an evolving transient condition would lead to instability is not yet solved for a completely general power system. (See Section 2.4.1). Some progress in this direction can be made when the system behaves like a two–machine system for the transient under consideration. For such systems (as for the more general systems) it would be necessary to obtain real–time measurements from the system at a central location, and then determine at the center whether a given transient condition can lead to instability among groups of machines or between portions of a power system. Assuming that such a determination can be made, it then becomes necessary to develop techniques for determining desirable separation points on the system with approximate match between load and generation.

Determination of desirable points of separation is a task which will require knowledge of the system state, consequently this task is best assigned to a center where state estimation is performed. The starting point is the net generation in each subnetwork which must be isolated as an island. This would be available once the condition of incipient instability is identified. Assuming that the state estimator has information about load buses and the active and reactive power injections (negative) at these buses, the remaining task is that of identifying a network splitting strategy which will produce matched generation and load. Given the load complex powers S_i (i=1,....N), we need to find groupings of S_i such that:

$$G_j \cong \Sigma S_k$$

where the index k selects certain values of i in order to achieve the approximate match with the generation in island j. Each island generation can be made up with various combinations of S_k. Identifying each of these combinations is a problem in combinatorics, and for a reasonable number of load buses and load sizes, all the available alternate groupings can be identified in a short time. It is also possible to produce a very comprehensive table of each possible group of generators as an island, and its associated alternative groups of load buses which match the

generation of each island. This much larger calculation must be performed in an off–line mode and used for a fast table look–up procedure when the actual islanding condition is imminent.

It would probably be necessary to include alternatives which do not produce exact balance between load and generation in each island, but achieve a somewhat coarser balance. Thus, one can visualize several groups of alternative scenarios for islanding, the first group being one with the best possible match; and the other (less desirable) groups having increasingly poorer matches between island load and generation.

The next task is that of identifying breakers which need to be tripped in order to create each of the islands. This task requires research to identify switching schemes to accomplish islanding, if feasible islands meeting the necessary generation match could be found. If several alternatives are found for each island, optimum islanding strategies must be found. If no islanding scheme can be found to satisfy the best match criterion, then islands with coarse matches must be tried. It seems reasonable that analytical techniques for this task — although not available at present — can be developed with moderate amount of research.

Input/Output Needs:

The real–time data necessary for this task must almost certainly come from the state estimator, since the main inputs are generator outputs, loads and present network status. Consequently, the task has no additional input needs of its own: the input needs of state estimation function are also the input needs of this task.

The outputs from this task will be supervisory control signals to selected substations to initiate islanding operations. No substantial departure from conventional supervisory control practices would be required.

Role of Communications:

Communication channels are essential, both for input and output. Input being managed by the state–estimation task, the only additional communication burden placed on this task would be the use of supervisory control channel for selected breaker switching. Since islanding operation requires moderate execution speeds, conventional supervisory control channels should satisfy the needs of this task.

2.4.4 Settings for Synchronization–Check Relays

Objective:

nization–check relays (or sync–check relays) to control reclosing of circuit breakers in order to limit the resulting shock to the power system to an acceptable level. Besides checking for live–line and live–bus conditions, the sync–check relays also check the angle across the circuit breaker and inhibit the reclosing operation if the angle is outside some preset limit. The objective of this adaptive relaying function would be to alter these angle margins as dictated by prevailing system conditions.

Present Practice:

An important criterion in determining the reclosing angle limits is the influence of the reclosing on the stability of the power system. Another criterion may be dominant when a reclosing operation near a generating plant is considered: the effect of reclosing on generator shaft life. In fact, the concern for shaft life is paramount when the possibility of reclosing into a fault exists. Assuming that this is ruled out (at least for phase–faults) by proper reclosing logic, (see Section 2.3.1) the angle limits on reclosing are once again determined by stability considerations (and resulting encroachment on tripping characteristic of distance relays).

Adaptive Possibilities:

As with most other functions in this section, the reclosing angles determined by stability studies made during planning exercises are likely to be inadequate in describing the state of the power system as it exists at any given instant. It is thus desirable to assess the impact of reclosing angles on power system stability starting with the current state of the power system as determined by the state estimator program. It should be recognized that the currently available state estimator programs address the steady state behavior of the power system, whereas in the present context dynamic models must be created in real time. It is a relatively simple task to estimate the dynamic state variables of machines and plants from the measurements made at machine terminals and excitation systems. [13].

The next task is that of determining permissible reclosing angles across various breakers for simulated faults, tripping, and resulting rotor oscillations. This is the problem of dynamic contingency analysis. At present several alternate approaches are being investigated for determining dynamic contingency conditions. One approach involves high–speed simulation with parallel processing [14], another approach involves Lyapunov functions or energy–type functions of power system state [15]. Yet another approach may involve the use of pre–determined system responses in a pattern–recognition framework. [16]. All of these approaches are experimental at the present time. However, it can be anticipated that in due time

the problem of dynamic contingencies will be solved, and (among other things) it would be possible to determine the reclosing angles of relays that are safe as far as the prevailing system state is concerned. It may well be that in the interim use could be made of a table of permissible reclosing angles based upon prior (off–line) studies. It may be possible to identify key system parameters, whose real–time values help identify suitable reclosing angle limits.

Input Output Needs:

Input needs of this task are satisfied by the central state estimation computer and its counterpart which determines dynamic contingency conditions. As the main burden of this task rests in the contingency evaluation problem, the needs of that task would be the governing criterion.

The output needs of the task are modest. New sync–check angles are to be communicated to reclosing relays periodically. This is accomplished in an off–line mode: no attempt is made to effect these modifications as power system transient events are in progress. Consequently, the usual supervisory control channels with limited data communication capability would be able to handle the needs of this task.

2.4.5 Steady State Security Assessment:

Steady state security assessment function is a central control function, and is generally not directly affected by protection functions. However, it is clear that computer relaying provides the ability to acquire system measurements (such as voltage and current phasors) which were not available with conventional protection systems. To a certain extent, it could be said that central control functions can adapt more closely to system changes because of the improved capabilities of computer based protection and control systems. We will highlight these concepts in this section, although strictly speaking it does not form a part of the adaptive protection concept.

Problem Statement and Objective:

This is a task of a central control facility in an electric utility, and the concepts being discussed here are going to address the steady–state security function from the point of view of benefits that can accrue from the real–time measurements made possible by an integrated protection and control system.

The steady–state security problem (distinct from the dynamic security problem discussed in another section of this report) can be roughly divided into two

parts: one dealing with the effect of line (or transformer) outages on redistribution of real power in the network, and the other dealing with the effect of reactive source outages on the voltages of the network. The first problem (real power redistribution) has been addressed through 'distribution factors' and 'generation shift factors'.[17,18] Briefly, the effect of an outage is simulated by superposition of currents flowing in the line (before the outage) upon the remaining network. The redistribution of the flow is approximately given by 'distribution–factors' which link the line current with flows in all other lines. This procedure gives fairly accurate results, and the distribution factors can be calculated off–line and used over and over again for changing system loading conditions, as long as the system configuration does not change. The relief of any system overload is suggested by similar factors known as 'generation–shift factors', which link the overload relief with a shift of active power generation from one source to another. The generation shift factors are also constant as long as system structure does not change. The question of selecting an overload relief strategy from an available list of choices is best handled through optimum power flow techniques. [19,20,21]. To the extent that the real power flow on a network can be approximated by a de–coupled P–θ formulation (the d–c load flow approximation), both the contingency evaluation and relief strategy calculation determined by this procedure is acceptable accuracy.

As the system loading reaches abnormal levels with power angles across the system becoming large, the assumptions associated with the principle of superposition and the decoupling of the P–θ equations from the Q–V equations becomes suspect. One may thus seek a more direct method of handling the contingency and relief question in a combined PQ – θV formulation. Direct measurement of the state–vector could be of use in such a situation.

By and large, formulation of the real–power redistribution problem as discussed above has been found to be reasonable in many contingency studies. In contrast, the problems associated with the redistribution of the reactive power in a network following loss of a source or an important tie, and calculation of the resulting voltage profile is extremely difficult. Note that the difficulty exists only in the context of contingency analysis, whereby a large number of cases must be studies repeatedly (and hence in a relatively short time). The Q–V problem can always be solved exactly by running a load flow with the outage. The control center need is to find an approximation to the load flow which is reasonably accurate.

Some approximation techniques have been suggested in the literature [22,23,24], however, none of these have yet proven to be entirely satisfactory.

An even more interesting aspect of the 'reactive power' – 'voltage profile' relationship is the phenomenon of voltage instability. This has been discussed in European literature [25,26,27], and quite possibly is significant in many power systems throughout the world. Briefly, the phenomenon can be explained in terms of dropping voltage magnitudes on transmission systems following a loss of reactive power source to such an extent that the load voltages can no longer be supported by the system — attempts to hold load power by reducing apparent load impedance lead to a progressive reduction in load voltage and power. In a simple load

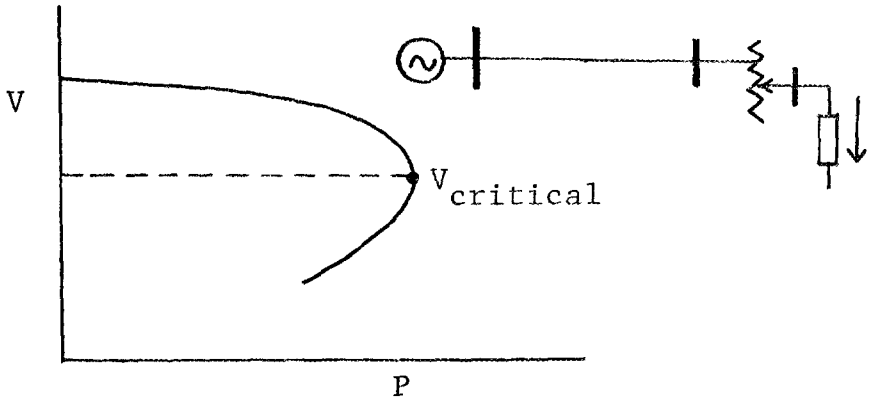

Figure 2.7
Voltage Instability in a Simple system

generation system shown in Figure 2.7, this phenomenon occurs at a load voltage $V_{critical}$, which is the voltage stability limit of the simple system. One approach of detecting an imminent voltage collapse is to measure the margin of safety above $V_{critical}$ by the difference between the actual value of the load bus voltage and $V_{critical}$. In a more complex system, a single V is not representative of the distance

from $V_{critical}$, and the concept of a 'Pilot point' — a point (bus) where the voltage magnitude gives a fair measure of the margin of safety — has been introduced.

Appropriate corrective action is to be initiated if the margin of safety is cut to intolerable levels.

It is certainly true for a simple system shown in Figure 2.7 and possibly for more complex systems — that the voltage–power curve is fairly flat above the critical point. Thus to extrapolate from some measured (or calculated) voltage magnitudes to determine the margin of safety is too risky and uncertain. A more secure measure of the stability margin would be very desirable.

Adaptive Possibilities:

The two problems discussed above — one of solving the real power redistribution, and the other of reactive power voltage effects — need considerable research for their solution. What is offered here is a preliminary qualitative discussion of what might be achieved through real–time state vector measurement.

Consider first the real power redistribution problem. The distribution factors may also be expressed as sensitivity matrix elements computed under the assumption of small angular differences between buses. If we assume that real time phasor (and hence phase angle) measurements can be obtained, it may be possible to compute distribution factors which incorporate the departure of the present state of the power system from a flat (small angle) voltage profile.

In the question of voltage instability, it seems likely that the angle of the bus voltage under critical condition is a quantity with steeper slope than displayed by the voltage magnitude — power curve of Figure 2.7. Should this turn out to be the case, (and this remains to be shown for a general system), the real time phasor measurements will provide a direct input for the assessment of margin of instability.

Input/Output Needs:

As with all functions in this category, the tasks will be driven from the central state–estimation and data acquisition system. Consequently no additional input, output or communication needs are anticipated.

2.5 DIAGNOSTICS AND ALARM:

Objective:

Substation alarms provide aid to an engineer in his attempt to reconstruct the chain of events that constitute a power system incident. In control and dispatch

centers, the system alarms also serve to call attention to situations where corrective actions on the part of dispatchers may be called for. Present subject being adaptive protection, the substation alarms (including relay targets) will be considered in this section.

The objective of an adaptive alarm and diagnostic system is to use regional and station information to create a logical picture of the events that may have caused the alarms to occur, and if appropriate, present alternative corrective strategies to regional dispatch center personnel.

Present Practices:

The station alarms are communicated to the dispatch center in the form of category (or type) alarm. The category (which may signify different degrees of urgency) of an alarm, when it becomes known at the center, contributes very sketchy information about the actual source of the alarm. The operating personnel usually go to the substation immediately if the alarm is a high priority one, or at the next available opportunity if it is a low priority alarm. The actual diagnosis of the event is performed after the detailed target and oscillograph information is obtained from the substation.

The target information is not time stamped — the only conclusion that can be drawn from the target is that a particular relay has operated since the last visit to the station when all the targets were presumably reset. A single event causes several targets to register, a few events may cause so many targets to be present that they do not contribute significantly to the system diagnostic and analysis process. The station oscillographs and digital event recorders, when available, are the most useful tool of analysis available to the engineer.

Adaptive Possibilities:

The main contribution made by computer relaying to alarm processing is that each alarm is individually time–stamped. Multiple alarms (or targets) are saved as multiple events, each with its unique place in the sequence of events. At the very least, a computer based system can provide a historical record of all targets, alarms, and switching operations.

In addition, an integrated system can confirm or verify an occurrence of an event through independent means. Thus, a relay action to trip a breaker can be verified through breaker auxiliary contact operation and breaker current interruption. A blown CVT fuse alarm can be confirmed by checking the existence of voltage on that phase in other relays.

Going one step further, the number of targets and alarms to be examined indicating the same event on the power system can be pared down, and a condensed summary of what happened can be presented to the engineer. A given fault may initiate several targets associated with the original tripping and subsequent reclosing operations — all of these could be condensed in a single statement. Such an activity is crucial in a power system dispatch center, where an operator's abiity to respond to an emergency may be severely curtailed by the large number of alarms that accompany a powersystem event. In a substation environment, real–time response is generally not waiting upon the operator's action, and the need for quick alarm analysis is not as crucial. However, it does aid in the diagnostic process and would be an asset in an integrated protection and control system.

Artificial Intelligence Techniques may be used to formalize analysis of events. A computerized procedure may be formulated in terms of rules for deductions based upon alarms. Preliminary work on this subject is reported in the literature; and it is to be expected that the same form of analysis can be applied to substation alarms.

Input/Output Needs

As no real–time response is needed, the input/output needs of this function are modest. It is necessary to store a certain amount of chronological log of events and alarms in order to analyze a sequence of related events, but the memory requirements should not be excessive. It would be reasonable to do this type of analysis in a hierarchical fashion — use substation records to perform a local analysis, which can then be transmitted to the regional center for coordinated analysis on a regional basis. When the number of pussibilities in a given diagnostic exercise are modes, any high level programming language would sufficie; in more complex situations it may be necessary to resort to special Artificial Intelligence languages.

2.6 MONITORING

Objective:

Integrated digital protection and control equipment in the substation with a substation host computer equipped with mass storage and even a slow communication link to remote locations, provides an opportunity for vastly improved monitoring. Improved monitoring can provide more complete information and records leading to informed and more intelligent decision making at all levels.

Monitoring can also provide the data base for other adaptive functions. In addition, better performance can be expected due to improved monitoring of plant and equipment for scheduled maintenance. Some of the monitoring functions can be adaptive themselves, providing more information about significant quantities during changes in system configuration after a fault, etc.

2.6.1 Monitoring of Operation, Settings, and Operating Parameters

(1) Log of faults, sequence of events, oscillography:

(a) Line faults: Fault type, fault current magnitude, distance from terminal to fault, relay time, breaker clearing time, prefault load current and voltage. Log of relay targets. Reclosing operations, sequences, timing. If successful, post fault load current. Oscillography, waveforms, calculated quantities such as impedance, kW, kVA, etc. The oscillography can be adaptive itself, in that, knowing the fault type and location more oscillographic information can be devoted to significant or slowly varying variables.

(b) Bus faults: Fault type, fault current magnitudes, relay times, breaker clearing time, prefault load currents and voltages. Log of relay targets. Post fault voltages where available. Adaptive oscillography, waveforms, calculated quantities such as impedance, kW, kVA, etc.

(c) Transformer faults: Fault type, fault current magnitudes, relay time, breaker clearing time, prefault load current and voltage. Log of relay targets, post fault load currents and voltages, loading on remaining transformers. Adaptive oscillography, waveforms, calculated quantities such as impedance, kW, kVA, etc.

(2) Remote log of protection settings: Log of selected locations, on request, when changes have been implemented, or periodically (such as at six month intervals): present protective settings, last change in settings, worst case load current, voltage limits and fault currents for recent time period, last periodic test, last periodic maintenance, diagnostic summary of present operational performance.

(3) Remote Log of Protective Operations: Log at selected locations, after each operation, upon request and/or automatically: sequence of events, summary of I,V,Z,X etc. for this event, comparison of this event with previous events or some reference case.

(4) Remote Log of System Conditions vs. Protective Settings: Log at selected locations, upon request, periodically, or when existing conditions and settings are within some tolerance: present system conditions vs. protective settings, (I,V,kW,kVA vs. Ipu, Zpu, etc.), maximum values over some time period, percent increase over last maximum value.

(5) Thermal Monitoring of Circuits:

(a) Overhead Conductor Sag: Alarm, shed load and/or trip depending on conductor temperature determined either by direct measurement or calculated from integrated current vs. time, measured ambient temperature, wind verlocity, and solar radiation.

(b) Cable Thermal Monitoring: Alarm, shed load and/or trip depending on cable temperature determined by either direct measurement in the duct or calculated from measurements in ducts sheath or trench and integrated vs. time.

(6) Load Monitoring and Recording: Periodic Summary logs printed out at designated locations to comply with planning needs, regulatory requirements, and company practices for each circuit, transformer bank, bus and substation of watts, vars, power factor kWh, RMS values of voltage and current: for current values, integrated values for 15 minute, 30 minute or 60 minute intervals, load factor and loss factor daily, weekly, monthly and annually, cumulative records of upper and lower RMS voltages and times when specified bands are exceeded, with time tags and duration.

(7) Synchronism Check Relay Monitoring: When a synchronism check function prevents breaker closing during manual remote control or during automatic reclosing, alarm remote operator and display the setting and the actual phase displacement. The alarm and display could be integrated into the adaptive alarm technique mentioned in section 2.5 in recognition that under some system conditions the failure of this particular reclose is a high priority alarm. The possibility exists for the operator to attempt to reduce the angle so that reclose is possible or the operator could be permitted to over-ride after acknowledgment and verification. Alternately, the alarm information might be an additional input to the global procedure for adjusting the bus voltage angles described in section 2.4.5.

2.6.2 <u>Cumulative Service of Equipment to Schedule Maintenance:</u>

(1) Equipment Cumulative Service Monitoring: As a real–time indication of maintenance needs keep a log of:

(a) Circuit breakers: Opening and closing speed vs. temperature, control voltage, air pressure, etc. Compressor running time, difference in phase closing, phase opening, trends in interrupting time or arcing time, integrated I^2t for arcing, number of times the interrupted fault current exceeded various settings, times of closing/opening resistor insertion.

(b) Power transformers: Integrated loading and cumulative loss of life, integrated I^2t for through faults by phase, the number of times the through fault current magnitude exceeded various settings.

(c) Transformer LTC and voltage regulator mechanisms: Operating speed vs. temperature, control voltage, etc., differences between phases on opening, closing, transfer, cumulative number of operations since last maintenance, since last change of arcing contacts and total since installed, integrated I^2t arcing, the number of times the interrupted current magnitude exceeded various settings.

(2) Service Monitoring and Recording: Periodic summary logs printed out at designated locations to comply with regulatory requirements and company practice for each circuit, transformer bank, bus and substation of record of outages, with time tags, cause and duration plus interrupted kVA peak, and kWh.

(3) Equipment status:

(a) Capacitors and Shunt Reactors: For routine or specially initiated command, monitor before and after kvar, kVA, kV, I etc. and determine whether switching took place as initiated.

(b) Gas Insulated Substations: Monitor, log, trend and compare, pressure, moisture content, corona level, alarm when out of limits or unfavorable trend.

(c) Communication Channels: Monitor performance and log degraded performance to aid in scheduling repair and maintenance, periodically test monitor and log to confirm performance, log and alarm degraded performance.

2.6.3 <u>Monitoring for Abnormal System Behavior:</u>

(1) Monitor voltage unbalance: Compare with previous values, if the change is large: compare with recent switching operations for correlation, e.g., single phase trip of a line fault; measure current balance at various locations to seek source of unbalanced voltage, e.g., one open pole of breaker or disconnect switch. If the change is moderate: compare with recent switching operation for correlation, e.g., opening of long untransposed line, reenergizing transformer or reactor bank with tap differences between phases.

(2) Harmonic Content: Monitor and log, alarm for excessive harmonic content of currents and/or voltages. For use near generators, capacitor banks, HVDC installations, large rectifier loads, sensitive and critical loads.

(3) Abnormal Sequence Quantities: Monitor and alarm excessive negative or zero sequence currents. For use near generators.

Input/Output Needs:

Most of the monitoring functions presented do not require additional inputs; those which do require additional inputs are:

Thermal Monitoring of Circuits: [2.6.1–(5)] Temperature, solar radiation and windspeed measurements are additional required inputs.

Equipment Cumulative Service Monitoring: [2.6.2–(1)] Additional inputs from the circuit breaker and LTC mechanisms such as air pressure, temperature, control voltage, resistor insertion etc., are required.

Equipment Status: [2.6.2–(3)] Pressure, moisture content, corona level for gas insulated substations and various signals from communication channels are additonal required inputs.

All of the monitoring functions require the type of mass storage found in a substation host computer or perhaps a higher level computer. It is assumed that most of the logs would ultimately reside in the area control center computer and be distributed to the appropriate organizational unit.

Accuracy and Timing Considerations:

Many of the monitored quantities are direct results or by products of the protection function and require no more accuracy than for the original protection function. Additional low data rate signals such as temperature, pressure, moisture content, etc. do not prevent accurcy or timing problems. There are two exceptions where accuracy or timing is an issue: oscillography, and power flow measurements for revenue purposes.

Conventional oscillography has a higher sampling rate than is necessary for

protective relaying. The oscillography mentioned in 2.6.1–(1) would either be at a lower bandwidth corresponding to the relaying sampling rate or special higher rate sampling rates (which are not used by the relay) would have to be used for oscillography. The higher sampling rate would require broader bandwidth anti–aliasing filters so that either oscillography and relaying signals are completely separate or the relay must further filter the sampled oscillography before relaying decisions are reached. In either case a considerable burden is placed on the relaying module in terms of additional A/D conversions and table storage. In the case of separate signal channels additional analog input circuits are required while more complicated digital signal processing is required if the oscillography signals are used to create the relaying signals in the processor.

It is not clear that complex power computed from voltage and current samples within a line relay, for example, would be sufficiently accurate for revenue purposes. The problem is that when load current is much smaller than maximum fault current the A/D converter must be set to accommodate the fault current and has low accuracy for load current. A possible solution, which also has some advantages in relaying, is to use two channels of current gains so that smaller currents would be converted accurately.

Role of Communications:

The primary communication need is a link from the substation host to the area control center or other remote locations. The link need not be particularly fast except in the case of alarms mentioned in 2.6.1–(5) Thermal Monitoring of Circuits, 2.6.1–(7) Synchronism Check Relay Monitoring, 2.6.2–(3) Equipment Status, and 2.6.3 Monitoring for Abnormal System Behavior. Even for these alarms, communication of an alarm in a few seconds seems adequate.

2.6.4 Dynamic State Estimation:

Objective:

Existing static state estimators which have contributed to improved operation of the system assume that the system is in a static state while the measurements are processed. As a result the static estimate is of no real value in dealing with dynamic events. While it is not feasible to simply speed up existing static estimators so the estimate is dynamic, new techniques make it possible to dynamically measure the system state. The objective of dynamic state estimation would be to enhance protection and control of the system with real–time measure–

ments of the state of the system.

Power System Problems:

When large bulk power transfers (necessitated by economic considerations) take place between utilities, the possibility of uncontrolled separations caused by loss of generation, transmission circuits, or transformers limit the amount of power that can be transferred. These separations are the result of dynamic power swings between the two systems and are associated with severe voltage problems, out of step tripping of vital lines, and even loss of additional units. The history of the Florida–Georgia interchange gives testimony to the problem.[32,33]

A similar problem is encountered where a large generating unit is connected to a power system. Because of the long down–time after a trip, 'heroic' measures such as single–phase tripping, reactor switching, and/or fast valving are employed to keep the units from being tripped unnecessarily.

Although the problems are different, they share common features. The bulk power transfer problem is solved using relays to effect controlled separation, while fast valving, for example, is a control on the unit's output. In both problems, however, decisions are made in real–time on the basis of extensive off–line studies. The relay logic for controlled separation must be fixed, i.e., it cannot react to changes in the system configuration. The fast valving logic can only react to local variables at the generator. As such, these implementations represent compromises obtained from off–line studies. In both cases the protection or control would be enhanced through real–time knowledge of the state of the system so that global solutions could be affected.

Dynamic State Estimation:

Line protection algorithms based on Fourier techniques can measure the phase angle of the bus voltage with respect to a reference determined by the sampling clock used in the A/D conversion. The measurements are particularly convenient if the positive sequence voltage phasor is computed.

In order to obtain phasor measurements from a number of locations on a common reference using these techniques it is necessary to synchronize the sampling clocks at the various locations. Sampling clock synchronization to within a few microseconds seems to be possible. In addition to the satellite signals there are currently available LORAN–C receivers with accuracies of one microsecond. Another alternative would be to use a dedicated synchronizing medium — such as microwave or fiber–optic links between substations. Clearly such channels cannot

be installed economically for the purpose of clock synchronization, but once in place for other reasons, they become an attractive option for this purpose. Such a system has been reported as being in use in a Japanese installation. If the use of fiber–optics over ground wires becomes common in transmission systems in the future, this technique of clock synchronization shows much promise.

The measurements can be available as often as once a cycle and are ideally suited for use in these applications. Although large numbers of these measurements cannot be transmitted throughout the system at a once–a–cycle rate, a few key measurements can be communicated rapidly. The long range benefits of protection and control techniques that adapt to the state of the system are clear. Current techniques are almost certainly less than optimal since they must work for all system states and cannot react to prevailing system conditions.

Input/Output Needs:

The protection modules require no additional inputs in order to provide estimates of the states. Depending on the application, some additional units will have the estimates of state as inputs and will have outputs to relays for controlled separation, or load shedding or generator fast valving, etc.

Accuracy, Timing, Communication and Computational Considerations:

The primary timing issue is the synchronization of sampling between the various substations involved. Since 1μ sec corresponds to 0.0216o at 60 Hz, it can be seen that a few microseconds' accuracy is necessary.

To illustrate the communication and computational requirements involved in dynamic state estimation and to illustrate a use for real–time measurements of state consider a power system with 40 generators with the largest distance to a generator from the central control center of 300 miles. We assume that dedicated fiber–optic channels are installed from the central computer to each generator to be used for sampling clock synchronization and communication of the estimates of state from the generators to the control center. Even considering the delay introduced by the repeaters required for the longer distances the total delay in transmission from the most remote generator can be estimated by using a propagation speed of 1/2 the speed of light over the distance involved. If a total length of fiber of 600 miles is needed to reach a unit 300 miles away then the propagation delay is less than 6.5 msec.

At each generator redundant measurements of line and transformer currents and bus voltage will be used to estimate the phasor description of the constant

voltage behind transient reactance for each generator. It must be emphasized that, because of the separate CTs and potential devices involved, a great deal of confidence can be placed on these estimates. Bad data can be rejected at the unit level for example. Two 16 bit words representing the magnitude and angle of the voltage behind transient reactance can be made available for transmission over the dedicated fiber–optic link every cycle. Since the fiber is dedicated, little overhead is involved in protocol, etc. If we assume that 64 bits are needed to transmit the 62 bits of raw data, then a communication rate of 64 kilobits/sec is required to communicate the estimated phasors in a millisecond.

The 40 messages will arrive asynchronously at the control center but will be identified by their dedicated fiber channels. An interface is necessary to store the 80–16 bit words until all have been received. When they are all in the interface an interrupt is sent to the main control computer to effect a Direct Memory Access (DMA) transfer of the data. Allowing 10 machine cycles for setup and 40 machine cycles for the DMA transfer of 40–32 bit words an additional 50 machine cycles or approximately 5μsec is required. Thus the estimated state vector is resident in the central computer 7.5 millisec after the data is ready at each of the generating units.

By comparing the present state with previous values it should be possible to determine quickly whether a transient event may be taking place. In the event of a transient, the goal is to determine whether the transient is stable and if not, to take corrective action to stabilize the system. The following is an estimate of the computer power required to achieve these goals using one approach. The approach is based on the Potential Energy Boundary Surface (PEBS) [28,29,30] and the use of a super computer.

It is assumed that the pre–disturbance system configuration and loads are known from the static estimator. In the event of a line fault, for example, the real–time monitoring being described here will take place every cycle after a line relay has sent a trip signal to a breaker but before and after the breaker has opened. In the interval before reclose (high speed or otherwise) the post fault system configuration will be known. It is proposed that a load flow for the reduced 40 bus equivalent be performed using the post–fault system configuration and the data from the static estimator.

By treating the loads as constant impedances in the reduced equivalent, an approximate solution to "load flow" is obtained through the solution of a linear network problem. If the full 80x80 Jacobian must be factored, then $(80)^3/2$ floating

point operations must be performed in the factorization. If we double that number to account for the remaining operations we get $(80)^3$ or 512,000 floating point operations. One of the reasons for using the reduced equivalent is that existing and proposed super computers are vectorized and are better equipped to deal with a small full Jacobian. In fact, 32 machines would be an ideal size on a Cray.

Given the post–fault equilibrium, the test to determine whether the state has crossed the PEBS can be evaluated with approximately 76,800 additional floating point operations. The worst case condition, computationally, is the cycle in which the load flow and the PEBS test must both be performed before the next set of measurements arrive. This would correspond to 588,800 floating point operations in 1/60 of a second or approximately 36 MFLOPS (36 million floating point operations per second). Existing super computers are rated at from 4 to 20 times this speed.

The worst case computation occurs only once per event. After the new equilibrium has been determined only the PEBS test is required. If the state crosses the PEBS boundary then computation must be devoted to determining action to stabilize the system. Off–line studies can be used to determine switching operations to reconfigure the system or alternatives can be evaluated in real time. Another possibility is to use the supercomputer to solve the dynamic equations for the 40 machine equivalent faster than real time using the measurements to improve and correct the prediction. If this proves feasible, then instability could be predicted in time for control action to prevent the instability.

The conclusion is that real–time dynamic state estimation and real–time control of transients are possible using a combination of real–time phasor measurements, dedicated fiber optic communications and super computers. All but the latter are being actively considered in the power system community. The existing National Science Foundation (NSF) initiative in super computers will almost certainly result in more powerful and less expensive super computers. Other approaches to real time control should be investigated. A possible weakness of the proposed approach is that loads must be treated as constant impedances in the reduced equivalent. The full sparse load flow does not seem practical even on the super computer because of their highly parallel structure.

2.7 SUPPORTING SYSTEM STUDIES

The computational requirements of the dynamic state estimation problem could be investigated. The problem associated with the approximations is involved with a load flow for the reduced 32 or 40 bus equivalent need to be investigated. In addition, the computational requirements for monitoring or predicting the PEBS in real time (in 1/60 of a second) on a super computer can be investigated on the Cornell University Production Super Computer.

Given real–time measurements of the power system state arriving at the area control center, the first problem is to determine the post–fault equilibrium state of the reduced 40–bus equivalent system. It is clear that if the loads are represented as constant impedances that a new equilibrium can be determined. It is also clear that the constant impedance assumption is an approximation. It is a research problem to determine whether there are other means of determining a more exact representation of the post–fault equilibrium which are suitable for real time computation. This work began at Virginia Tech during the summer of 1988.

Given the post–fault equilibrium state and the real–time measurements, it is possible to monitor the passage of the system over the Potential Energy Boundary Surface (PEBS) as described in the dynamic state estimation section. The feasibility of these calculations in real time were demonstrated on the Cornell University Production Super Computer during the summer of 1986. A more interesting and challenging task is to solve the system equations faster than real time transient stability calculations for the reduced 40th order equivalent on the Super Computer. Using an implicit trapezoidal algorithm and assuming that three iterations of a newton solution are necessary, the problem is decoupled into the 40 by 40 network solution and the 40 independent machine solutions. An operation count depends on the order of the machine models used (say 6 states per machine) and on the calculations involved in the 40 by 40 network solution. Each network solution is bounded between 40^3 and 40^2 operations. The total operation count then varies between

$$3x(40)^3 + 40x6^3 = 200{,}640$$

and

$$3x(40)^2 + 40x6^3 = 13{,}440$$

If a time step of 1/20th of a cycle is used the machine rating for real–time calculation is bounded between 240 MFLOPS and 16.2 MFLOPS. At the high end it does

not seem practical to consider faster than real–time calculations while at the low end, speeds up to ten times real–time are possible.

The faster than real–time calculations proposed here are also interesting in that the real–time measurements are available to correct the solution. That is, while the faster than real–time transient solution is being computed more data about the actual event is being made available to the computer. The use of this information and the feasibility of performing these calculations in real–time were investigated at Cornell University during the summer of 1986.

3. ORGANIZATIONAL STRUCTURES

3.1 INTRODUCTION

Chapter 2 dealt with various relaying functions and their potential for benefiting from adaptive changes through communication with different levels of the hierarchy. The higher levels could be local — for example within the substation where the relay is located — or remote. Discussion of organizational structures for adaptive relaying calls for a study of the nature and source of the additional information upon which the adaptive feature is based. Also of interest are the communication channels and the effect of their failure on the adaptive (as well as the non–adaptive) protection functions. In this chapter, the levels of hierarchy are treated as centers for gathering and dissemination of data. The inter–relationship between various levels, the communications links, and the protection functions are also discussed.

Communication links constitute a major expense, and cannot be justified solely based on the needs of adaptive relaying concepts. Often the communication link is justified from several other application needs — and relaying, or adaptive relaying, would be an additional function served by the link. We will discuss various aspects of communication links themselves in the next chapter.

Various levels of the hierarchy (data centers) and their interrelationships are shown in Figure 3.1. The communication links are shown as functional links tying various levels, without regard as to the actual nature of the links and switching strategies. The four levels of hierarchy are

(1) Data acquisition units
(2) Relaying Computers
(3) Substation host computer
(4) System Central host computer

The data acquisition units and relaying computers constitute the protection system. The data acquisition units collect voltage and current samples which must be made available to the relaying computers with a time delay of less than 100 microseconds. The relaying functions are independent of all other elements of the station hierarchy. The substation host computer acts as a data concentrator for the entire station. Several of the adaptive functions can be carried out by this processor acting independently, or through the relaying computers. The system central host computer has access to data obtained from all the substations. It can perform

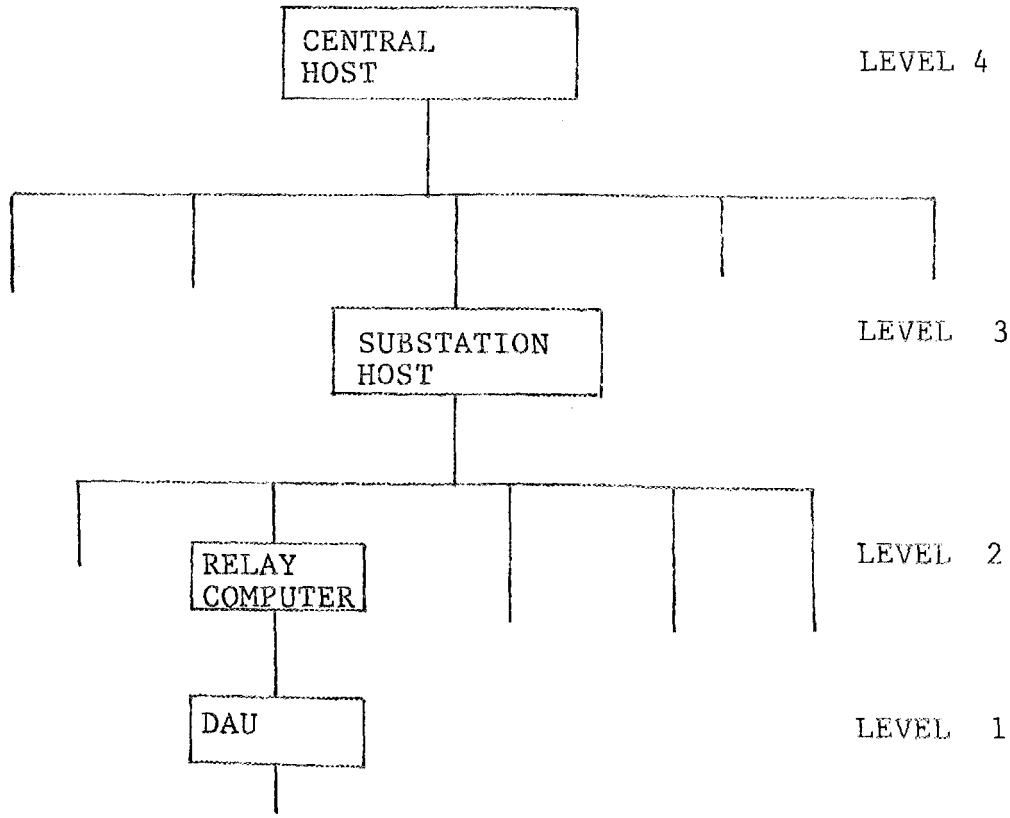

Figure 3.1
Hierarchical Computer System for Substations

adaptive functions which depend upon system–wide data, and communicate the adaptive changes to various relaying computers through their respective substation host computers.

The three level (excluding the lowest data acquisition level) organizational structure is ideally suited to the power system computer hierarchy. It reflects the nature and origin of various data. First, there is high speed data belonging to the protected element, and this is handled by the relaying computers. The relaying computer generates computed (or derived quantities — this is equivalent to a data reduction procedure — and this reduced data from all the protection computers within the substation can be accessed by the substation host computer. It is

therefore a natural node in the organizational structure. There is further data reduction within the substation computers, and in turn the reduced data from all the substations in the system can be collected and processed by the central host computer. All organizational structures considered in the literature for power system protection and control use this three level structure in one form or another.

It is a rare occurrence that a major system disturbance is caused by misoperation of the high–speed (primary) relaying functions. More often it is the operation of back–up relays (either because of a relay hardware failure or because of a wrong setting) that leads to major system disruptions. One could therefore anticipate that adaptive changes made to backup relaying functions will play a significant role in improving power system performance. It is also likely that primary high speed relaying — being much too fast — cannot be modified after a system disturbance begins. Thus adaptive changes to primary relaying must be made while the power system is in steady state, and moderate communication speeds may be satisfactory. On the other hand, back–up relaying takes at least several cycles, and possibly as much as a few seconds to operate. It is thus possible to modify back–up relaying characteristics after a disturbance has started. The communication needs in this case are far less stringent. Consequently, back–up relaying functions will have a far greater influence on organizational structures and communication system capabilities needed for adaptive relaying systems. It is therefore desirable to review the evolution of back–up relaying and some aspects of back–up relaying implementation in the digital computer environment. These topics are covered in the next two sections.

Organizational structures will also influence (and will in turn be influenced by) reliability considerations. Failures in the centers of the hierarchy as well as in the communication links must be considered, and their influence on the behavior of adaptive and non–adaptive relaying techniques evaluated. Some discussion of this nature was contained in Chapter 2. Additional considerations will be found in Section 3.7.

The discussion of communication links is deferred until Chapter 4.

3.2 EVOLUTION OF BACKUP RELAYING

In 1948 an IEEE paper by E. L. Harder and W. E. Marter [34] examined the prevailing relaying practices in the United States. The problem of failure to clear a

it for any reason was addressed in terms of personnel safety and extensive repair. System stability was not a major concern. The predominant practice was to provide remote tripping by overcurrent relays and second–zone distance relays. There was no general acceptance of duplicate relays. Good supervision and maintenance practices were stressed.

In 1956 an IEEE paper [35] on the Ohio Valley Electric Corporation 330kV transmission system described the application of duplicate line relays fed from separate CT's and PT's and separate relays to initiate breaker failure trips. The expense and complexity of this installation was justified by the unusual circumstances surrounding this project. A group of utilities formed the Ohio Valley Electric Corporation to build two power plants with eleven 215 MW units. These plants were built to provide power to the Government–owned gaseous diffusion plant in Portsmouth, Ohio.

In 1957, L. F. Kennedy and A. J. McConnell [36] from their appraisal of back–up relaying practices concluded that:

(a) Remote backup is inadequate for modern systems

(b) Relay backup, even the equivalent of two first line systems, is inadequate

(c) Breaker backup consisting only of first line relays and a timer is inadequate

(d) Breaker backup, with separate backup relays, provides sound protection

(e) A local backup system using an entirely separate group of relays will meet all functional requirements for backup protection.

In 1959, and again in 1964, the IEEE Power System Relaying Committee (PSRC) reviewed relaying practices [37,38] and concluded that remote relays continued to be the dominant backup method. Breaker failure protection was provided by adding a timer to start after the primary relays operated.

The weakness of remote backup was emphasized by the Northeast Blackout on November 9–10, 1965. The relay which caused the disturbance was installed in 1951 for backup protection of the primary relays at Adam Beck Station and modified in 1963 to provide stuck breaker protection for a remote terminal [39]. The original settings were never modified to accommodate the steadily increasing load.

In 1970 the IEEE PSRC [40] wrote a detailed review of the backup

protection problem, including all of the elements in the protection chain. Its conclusion agreed with Messrs. Kennedy and McConnell and included quantitative analysis of breaker and relay operating timers, CT and breaker configurations and circuit diagrams. This paper reflects today's dominant practice which has resulted in a shift in emphasis from a timed backup scheme to one which provides duplicate high speed protection.

3.3 BACKUP IN A DIGITAL ENVIRONMENT

The backup described in this section is the backup of the digital equipment, signal paths, algorithms, and functions that are involved in digital protection. Backup in the traditional relaying sense, involving zones of protection etc., might be affected by digital technology and improved protection but is not the subject of this discussion.

In order to discuss backup in a digital environment it is necessary to identify the elements required to protect a component of the power system. In a digital environment these are:

(1) digital values representing samples of the appropriate power system signals (voltages and currents for a transmission line, currents for bus and transformer)

(2) a processor with appropriate software to process the samples and reach a relaying decision

(3) a connection between the digital output of the processor and the appropriate circuit breakers.

the first of the three elements has the most pronounced effect on the structure of the backup mechanism. That is, the structure of the signal paths between the transducers in the switch yard and the protection processors is the key issue in backup design. A backup scheme must be capable of protecting against transducer failure, processor failure, failure of protection principle, and possible failure of the organization of the protection system itself.

The importance of the input signal paths can be examined by considering the backup mechanism for processor failure. An additional distinction must be made between organization structures in which the dedicated protection processor accepts digital input signals and those in which analog signals are input to the dedicated protection processor. The important distinction is whether a single failure in the

processor can result in a failure of both the analog to digital conversion and the

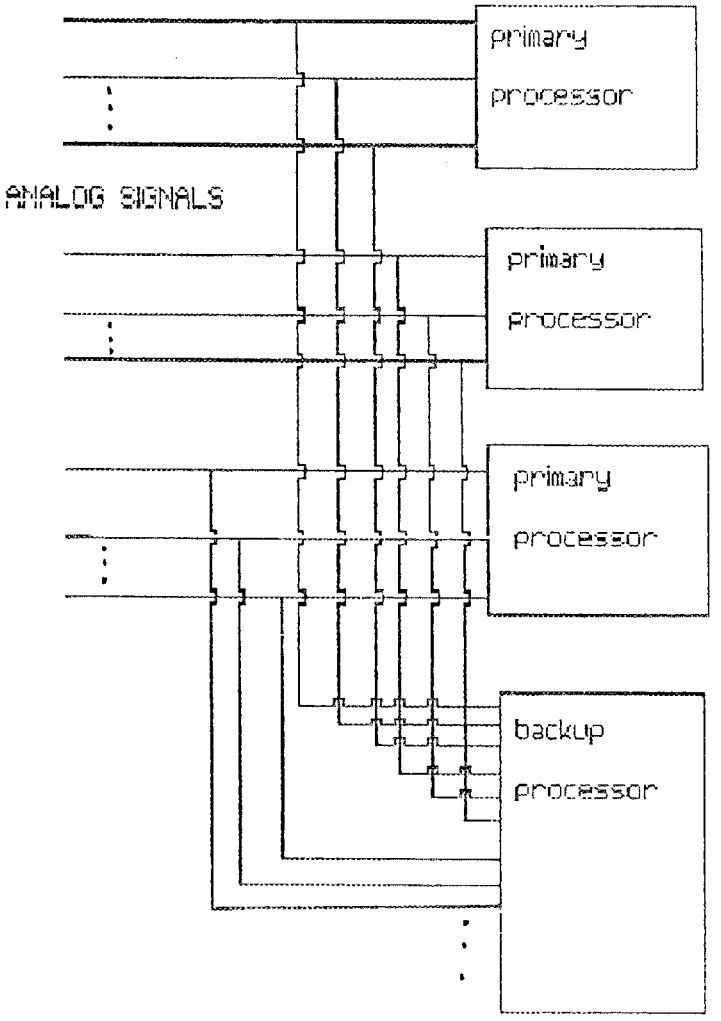

Figure 3.2
Computer Structures and Back–up Considerations

protection logic. Consider the structure shown in Figure 3.2 in which the processors require analog inputs. In order to provide backup for a processor failure of the worst kind it is necessary to provide parallel analog signal paths to the backup processor or processors. The limiting version of Figure 3.2 is one in which each

primary processor has a dedicated backup processor with the same analog input signals. There are differences of opinion on the need for a dedicated backup. The French [43] accept the need for duplicate protection with different principles used for primary and secondary while the Belgians in the ALPES (a French acronym for 'An Integrated Control System for EHV Substation') project [42] argue that a full redundant system is not necessary.

If fiber optic communication link is used between the Data Acquisition Units (DAUs) and the proces– sors [41,43] then some of the problems associated with Figure 3.2 are solved with star type optic couplers. The French report such a coupler with 37 different channels.

If the analog to digital conversion is performed separately then it is possible to provide the alternate signal paths required for backup in a digital fashion. Figure 3.3 shows an interface between the digital signals and the protection processors

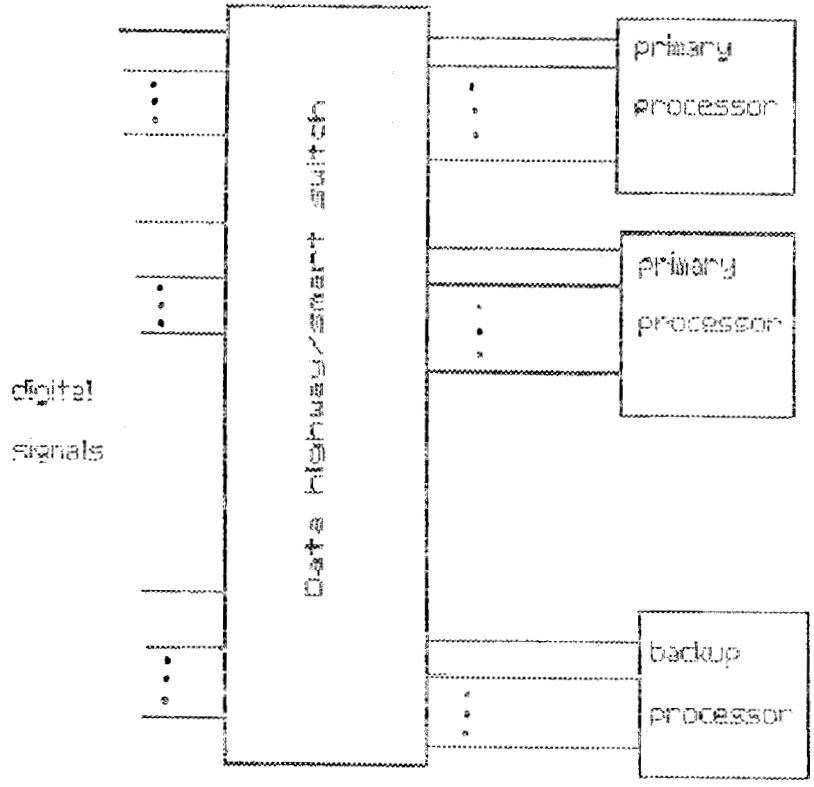

Figure 3.3
Alternative Computer Structure

labeled 'data highway/smart switch'. The term 'data highway' implies that all the input signals are available on a high speed bus and can be acquired by any of the processor as needed. The 'smart switch' is similar to a telephone switching system and provides a controllable connection between the inputs and outputs. The smart switch does not make all signals available to each processor but rather can redirect a specific set of input signals to the backup processor when the failure of a primary processor is detected. Such a smart switch has been suggested as a means of inter-connecting array processors in a super computer so the practically achievable speed of such devices is not in question.

The organization of Figure 3.3 has an advantage in terms of transducer or A/D conversion failure in that it can expedite data sharing. If one of the input signals is lost it may be possible to provide the affected processor with a replacement signal derived from the other inputs. This would require direct processor to processor communication in the scheme of Figure 3.2. It is even possible to imagine the use of a primary processor as a backup if the switch were sufficiently intelligent. That is, if the switch determined that there had been a failure of processor A and that a possible fault condition existed that involved processor A but not processor B then the switch could direct the inputs from processor A to processor B.

The disadvantage of the scheme shown in Figure 3.3 is that the failure of the data highway/smart switch is a common mode failure of the entire protection system. If the switch could be designed so that it failed as a direct connection between inputs and outputs (losing its intelligence but maintaining the original nominal connections) then the switch system may be acceptable. The data highway is the digital version of Figure 3.2 in that all the potentially needed signals are always available to the backup processors.

An additional type of backup is possible within a single processor. One feature of conventional backup schemes is the use of relays based on different protection principles so that situations which are hard to protect with one principle are covered by a more appropriate principle. For example, the use of phase comparison during a swing, when distance protection cannot protect the line adequately. In a digital protection scheme it is not necessary to use separate devices for such backup but rather the same hardware with different logic can be used for such situations. Using sufficiently powerful processors it is possible to imagine that a

single processor might be using two different algorithms for protection at all times to provide a back–up of the protection principle. At the minimum, it is reasonable to expect the processor to detect the difficult situation and switch to a more appropriate algorithm.

The architecture of the interconnection of the processors themselves (the right–hand side of Figures 3.2 and 3.3) also has a bearing on backup. The way in which the processors communicate with each other is important in the event of processor failure in that some mechanism for declaring that a processor has failed must be provided. Several possibilities are shown in Figures 3.4 – 3.6. The direct processor to processor communication shown in Figure 3.4 could be accomplished

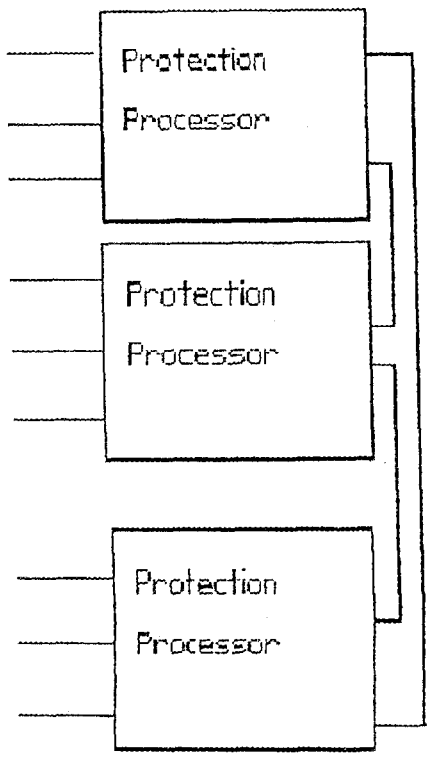

Figure 3.4
Processor to Processor Links

with Direct Memory Access (DMA) [41] or with a common bus structure. The ALPES project used a 4 CPU common bus configuration. Figure 3. 5 shows a Data

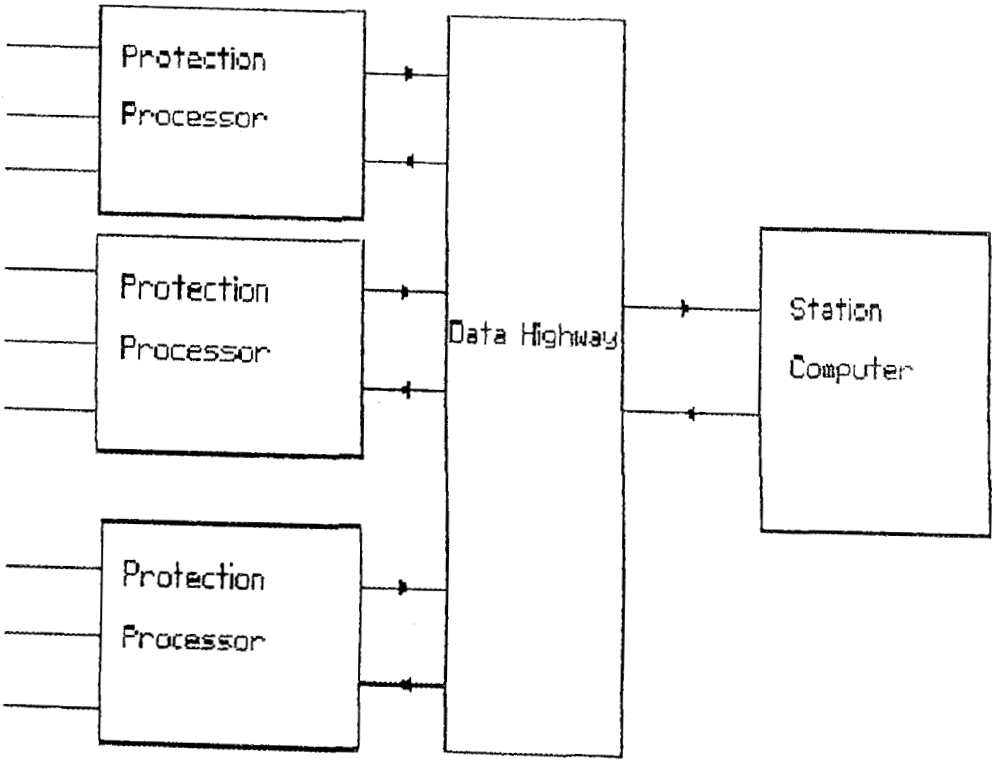

Figure 3.5
Data Highway

Highway connection between the protection processors and the station computer. Again the data highway is as in Figure 3.3 and provides high speed communication. The highway even provides the possibility of one of the protection processors taking over the role of station computer in the event of a failure of the station computer.

Finally, Figure 3.6 shows a conventional interconnection between processors and the station computer.

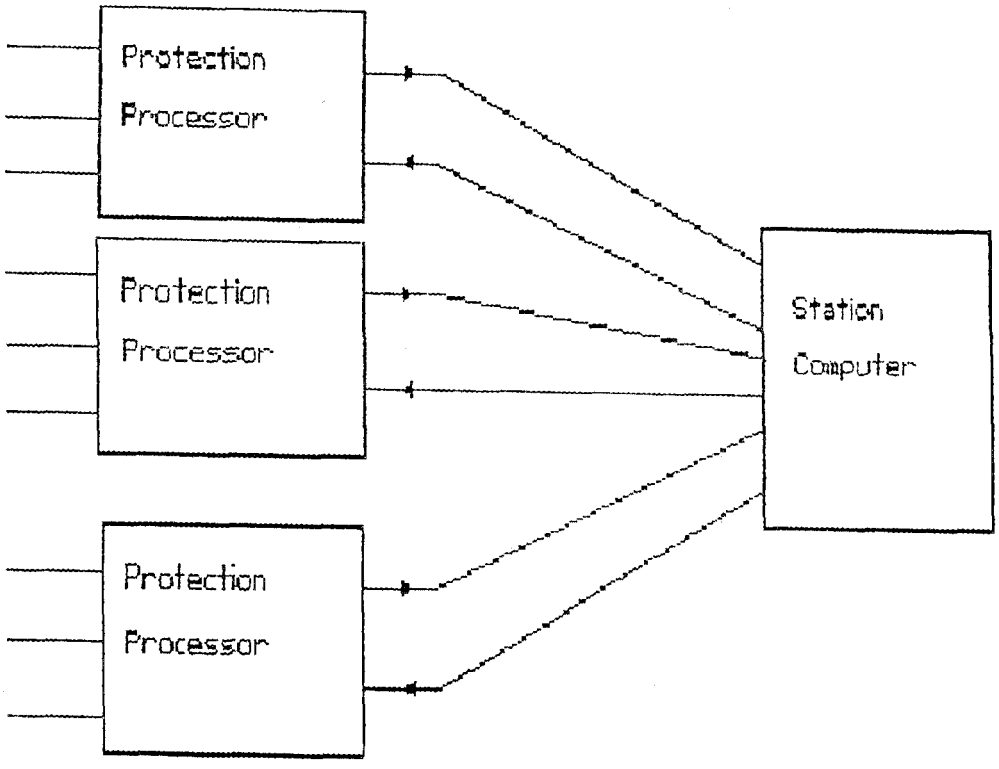

Figure 3.6
Interconnection between processors and Station Computer

3.4 ORGANIZATION AT THE SYSTEM CONTROL CENTER

3.4.1 Introduction

Many adaptive features discussed in Chapter 2 require system–wide data for their implementation. The central host computer (level 4 in Figure 3.1) is the appropriate vehicle for making system–wide adaptive decisions. It must be assumed that communication links between the center and the various substation host computers exist, and that the channel speeds can accommodate the data flow rates called for in each adaptive task. As will be seen in the following discussion, different adaptive functions have differing data needs. However, in all cases the organizational structure remains constant: a central computer in communication with all the substation host computers.

Following adaptive functions described in Chapter 2 call upon the central

computer:

- Multi–terminal line protection — Section 2.1.1
- Detection of System Instability — Section 2.4.1
- Load Shedding and Restoration — Section 2.4.2
- Out–of–step Relaying — Section 2.4.3
- Synchronization Check Relays — Section 2.4.4
- Dynamic State Estimation — Section 2.6.4

3.4.2 Multi–terminal line protection

Several alternative adaptive protection techniques for multi–terminal lines were discussed in Chapter 2. The one using real–time Thevenin equivalents would require contributions from the central computer.

The Thevenin equivalent needed is a multi–port representation obtained by looking into the system from all the terminals of the multi–terminal line. State estimation programs provide a technique to obtain the required multi–port Thevenin equivalent. The computation would be updated every time the state estimate changes significantly. When the equivalent is also found to change significantly (which should be far less frequently than state estimate changes),the data must be sent to all the terminals of the transmission lines. As this updating is being done in a no–fault state of the power system, modest data speeds are required. The line terminal computers must also have a default Thevenin equivalent which could be used safely if any of the updates are lost (or erroneous) while a fault occurs on the multi–terminal line. The data flow in the organizational structures is from substations to the center for state estimation, a network reduction cycle at the center, and transmission of the multi–port Thevenin equivalent to the line terminal computers. Default values are to be pre–stored in each of the relaying computers.

3.4.3 Detection of System Instability

This function is not directly responsible for relaying decisions. Rather, its decision would be conveyed to various relaying systems — such as load–shedding and restoration relays, out–of–step relays — in order to make them adaptive. The stability detection function belongs at the central computer. The input to the

function consists of state estimation results and historical record of various phasor swings as a function of time. The data rate requirements for tracking the movement of phasors are among the most demanding of all the adaptive measures considered here. In addition, the computational needs of the stability prediction algorithm could also be quite substantial. It is likely that computers of the next generation (super–computers) must be used at the center in order to handle the stability prediction task.

Recent technical literature has proposed the use of local frame–of–reference variables at each generating station as a vehicle for making stability computations in a distributed computer network. Although such a scheme seems unworkable on theoretical grounds (stability being a system–wide concept) perhaps some computation can be performed at generating stations, and the results communicated to a center for a system–wide solution. Such a procedure — if successfully developed — would call for more computing power at generating stations. However, this development can also be accommodated by the four level organizational structure described by Figure 3.1.

3.4.4 Load Shedding and Restoration

Load shedding and restoration function needs real–time power flow and frequency data from different buses of the system. The computations required for this function must be performed at the central computer. The data needs are similar to those of a state–estimator, and consequently the organization structure of Figure 3.1 is also suitable for this task.

The load shedding and restoration commands will originate at the center, and propagate down the organization communication links to various substations where the actual execution of these commands will be carried out.

3.4.5 Out–of–Step Relaying

This function also requires that the computations be performed at the center. The output of the instability detection program of 3.4.3 is used to determine the necessary islanding strategy. The state estimation output, also available at the center, is needed to determine the alternative self–sufficient islands and their associated switching strategy. The necessary system data is collected by the central computer from substations through organization structure of Figure 3.1.

3.4.6 Synchronization Check Relays

The system real–time data is used to calculate allowable reclosing angles for various circuit breakers. The computations are off–line, and could be run at any location where current system state is available. The most convenient place for the simulations is the central computer. However, conceivably the state estimate could be communicated to the substation where the breaker resides, and computations performed there. The only benefit of such a scheme would be reducing the computational burden at the central location.

3.4.7 Dynamic State Estimation

This function needs data about (dynamic) state variables, and is best performed at the center. Substantial data rates are called for, and as explained in Section 2.6.4, the computations to be performed are quite intensive. No new organizational issues arise due to this function.

3.5 REGIONAL ORGANIZATION

3.5.1 Introduction

Several of the adaptive possibilities discussed in Chapter 2, involve communication beyond the substation level and yet are not system–wide in that communication is only to an adjacent substation. This type of organization is termed regional. There are three distinct possible organizations at the regional level. The first is direct processor to processor communications even though the processors are in different substations. A second is direct communication between substation hosts, while the third is indirect communication between substations through a regional center. The last is, in some sense, subsumed by the system–wide organization but could be used for slower transmission rates or as a backup.

To evaluate the possible regional organizations we will consider the adaptive possibilities introduced in Chapter 2 which are regional in nature. These are:

Multi–terminal Lines	–	Section 2.1.1
Series Compensation	–	Section 2.1.3

3.5.2 Multi–terminal Lines

The four possible adaptive techniques for protection of multi–terminal lines introduced in Section 2.1.1 have different communication requirements. The first,

adapting to system switching, requires that simple ON–OFF information about breaker status be transmitted to the remote terminals. The band–width requirement is low and is practical in any of the organization structures.

The second adaptive technique, adapting to system load, requires no communication while the third, adapting to system Thevenin equivalent, requires information that is only available at a central location. The multi–port Thevenin representation for the power system as seen from the terminals of the multi–terminal line could possibly be created regionally but it is more natural to imagine the state estimator information being used in a central location. As such, adapting to the Thevenin equivalent is system wide rather than regional in terms of communication needs.

Only the last technique which uses voltage and current measurements at all terminals, places any demands on the regional organization. Even if phasor measurements are communicated once a cycle, high speed substation to substation communication is required. Indirect substation to substation communication through a regional center would not be appropriate for the data rates required. Either direct processor to processor communication or communication between substation hosts over fiber optic links is adequate for this adaptive technique.

3.5.3 Series Compensation

Although the adaptive technique for protecting series compensated lines presented in Section 2.1.3 does not require communication for its operation, the coordination of such a relay with backup relays would be enhanced by substation to substation communication. The adaptive technique uses the phase angle of the current to determine whether the series capacitor is in or out and uses that information in the impedance calculation.

3.6 SUBSTATION ORGANIZATION STRUCTURES

3.6.1 Introduction

The ability of a single digital device to perform many of the protection, control, alarm, and monitoring functions in a substation, makes it advisable to re–evaluate the traditional practice of dedicating a single device to a single function and optimally locating that device.

The assignment of functions to a given processor, its location in the substation and its links to substation equipment and to other processors depends upon a variety of factors. Among them are the substation bus configuration, the number, location and type of output responses and the man–machine interface, communication and reliability considerations.

A CIGRE report [41] identifies 2 representative configurations of computer hardware. The first scheme accesses data via a remote Data Acquisition Unit and a serial link to one or more processors. At another extreme, the second scheme uses parallel, hard–wired signals between all analog and digital signals and dedicated processors. In both examples, there is provision for redundant data sources, and where appropriate, redundant function modules. Between the two extremes, of course, there are many other possible configurations.

For the purpose of our investigation into the organization of processors within a substation, let us consider 3 levels of computer hierarchy, the equipment level, a bay level and the substation level. In addition, to evaluate the I/O requirements we must recognize that substation bus designs provide a single breaker per system element on single bus, double bus and transfer schemes and two breakers per system element in ring bus and 1–1/2 –breaker bus designs.

To evaluate the possible substation hierarchies, we will discuss the adaptive possibilities covered in Section 2 that relate to hierarchical structure within the substation. These are:

Section 2.1.2	–	Prefault Load
Section 2.1.2	–	Cold Load Pick–up
Section 2.1.2	–	Line Charging
Section 2.1.3	–	Series Capacitor
Section 2.1.4	–	Parallel Line
Section 2.2.1	–	Transformer Protection
Section 2.2.2	–	Transformer Monitoring
Section 2.2.3	–	Bus
Section 2.3.1	–	Reclosing
Section 2.3.2	–	Data Sharing
Section 2.3.3	–	Breaker Failure
Section 2.3.4	–	Capacitor Banks

3.6.2 Prefault Load

To adapt a digital relay to account for prefault load, there are no changes required in the equipment, its location or connections. This adaptive possibility is implemented through software within the protection module.

The protection module will ordinarily be located at the equipment level for a single breaker/single element station or at the bay level in a double breaker/single element station. The I/O requirements are met for the protection function and will accommodate the adaptive requirements.

3.6.3 Cold Load Pick–up

This adaptive technique is implemented through a logic chain that recognizes the amount of time that service is lost to a given line or area. This information is derived from breaker status data that is already provided in the protection module.

The need for additional connections will depend on whether service is lost to a radial load or to an area. In the former case, only those breakers associated with the radial load are involved and this information already exists in the protection module. If a wide–area is blacked out, all of the breakers involved must communicate with each other. This may best be implemented at the bay or substation level.

3.6.4 Line Charging

The capacitive current associated with line charging is a function of the line voltage and the amount of reactive compensation, if any. To factor this information into the protection module requires a signal from a line or bus potential device and the status of any reactor breakers or switches.

The voltage signal will normally be present at all levels. The reactor breaker status will probably only be available at the station level. The effect of line charging can then be implemented in the protection module by receiving the raw data or it can be calculated at the station level and the correct current value transmitted to the appropriate protection modules.

3.6.5 Parallel Line

The protection of parallel lines is enhanced by eliminating prefault load and calculating the fault impedance using the current in all six phases. A dedicated processor can be provided at the bay level which accepts the necessary information

from the associated CT's and delivers the trip signal to the breakers. Alternatively, two existing line protection processors can be interconnected so that the six–phase impedance calculation is a routine part of both fault calculations.

3.6.6 Shunt Capacitor and Transformer Protection and Transformer Monitoring

The adaptive possibilities associated with shunt capacitors and power transformers are all dependent upon data that is normally available within the protection module. No additional inputs or connections are required.

3.6.7 Bus Protection

Adaptive bus protection can adjust the slope and pickup of a percent differential relay using past history under abnormal conditions and can redirect tripping under abnormal station configurations. This is particularly advantageous in certain bus designs where breaker bypassing and transfer buses are used.

The bus protection module continuously monitors the currents in all CT's and requires no further inputs or connections to analyze the secondary currents.

The response, however, to breaker switching schemes requires communication links with all other protection modules. Conceivably, a substation level computer would contain all of the necessary information and could transmit it to a dedicated bus protection module. Alternatively, the substation computer could, itself, serve as the bus protection processor.

3.6.8 Reclosing

The implementation of adaptive reclosing, in almost all cases, can be accomplished within the protective module itself, i.e., at the equipment bay level.

(a) *Type and Severity of Fault.* This information is known as a result of the fault calculation and can be implemented directly in the accompanying trip and close logic.

(b) *Hard vs. Soft Reclosing.* The logic described in Section 2.3.1 depends upon each phase voltage on both the bus and line side of the circuit breaker plus a transmitted signal from the remote terminal. The voltages are in the protection module as part of the line protection algorithm. A communication link operating at a speed compatible with the HSR time is required. The logic signal to indicate a fault

detected at the remote terminal can be transmitted and received directly as is the communication signal associated with the pilot protection or it can be conveyed through the substation computer.

(c) *Instantaneous Relay Bias.* An instantaneous or zone 1 relay, normally set to cover 80–90% of the line section under system normal conditions can be reset to cover 100% of the line when fed from one end only. The information required comes directly from the protection module indicating the breaker(s) is open, a line potential device indicating the line is not energized from the remote end and from the control logic that specifies the first breaker to be closed.

(d) *Central Recloser.* Section 2.3.1 suggests that the circuit breaker reclosing function can be enhanced by utilizing a central reclosing processor, either in the station or at a regional control center.

A station recloser would operate at the station level and control each breaker, knowing the complete breaker and switch configuration in the station plus any additional information transmitted from a regional center.

A regional recloser would make the reclosing decisions for each breaker in the region knowing the total system condition. The difference between the two schemes would be the communication speed and computer power involved.

3.6.9 Breaker Failure

The input information necessary to implement an adaptive breaker failure scheme comes from the breaker control module itself, i.e., the presence of load current, a transient monitor, minimum fault current levels and the operation of closing or tripping circuit breaker resistors.

The output information, however, will vary depending on the station and system configuration. This information is derived at the station or system level.

For example, in a single bus or transfer bus station, a breaker can be bypassed and another breaker substituted. In a 1–1/2 breaker or ring bus station, a breaker may be normally open for short circuit limitation. In either case the breaker failure tripping signal must be redirected to clear a fault.

3.6.10 Data Sharing

The sharing of data is an inherent attribute that is basic to the application of digital technology. Our interest here is in the ability of a processor to recognize that a normal input signal is missing or incorrect and to restore the appropriate data from another processor.

A relatively straightforward situation develops if 2 separate but dedicated protection modules are involved, e.g. a primary and secondary protection scheme. Each module will have the same data and can be continuously cross-checked for accuracy. It is not difficult to apply a consistency check to the data, identify the incorrect information and use the other in both processors.

There are, of course, other processor configurations in which the back-up protection resides in a spare or common processor. In this case the data may have to be reconstructed from other processors. In the case of current, if a primary transducer or communication link is faulty, the correct data may be recreated from 2 or more processors. In a single breaker/single element design, the missing current can be calculated from the sum of all of the other currents. In a 2 breaker/single element design, it may be necessary to capture some information from a remote station. Voltage data is relatively easy to recapture from any other line or bus potential device. Switch and breaker status inputs may be required to be derived from current flow or voltage.

3.7 MAINTENANCE PRACTICES

This section is concerned with the impact of digital technology and the adaptive philosophy and organizational structure on maintenance practices. Some of the maintenance issues are a direct result of the digital technology while others are a consequence of the organizational structure. The use of digital devices for protective relaying could in itself have an impact on maintenance practice. The self checking and monitoring ability of digital devices is believed to increase the reliability of the protection system. As experience and confidence is gained with self checking and monitoring it seems possible that the time interval between the maintenance of digital relays could be extended. This assumes, of course, that a communication link exists between the relay processor and some central location so that the results of the self monitoring are known to maintenance personnel. In a sense, digital devices and communication links can provide for a limited amount of "maintenance at a distance".

The adaptive features can expedite some types of maintenance. Given that appropriate data sharing exists, (see Section 3.6.10) the maintenance of a data acquisition unit could be accomplished without disabling the protection. If the organization structure provides for processor backup (see Section 3.3) then relaying processors can be maintained without affecting protection. If the organization in the substation is sophisticated enough even the substation host can be maintained without loss of function. (This assumes that one of the protection processors takes on the role of substation host.) In the absence of this degree of backup, maintenance of the substation host would mean the loss of adaptive features that depend on external signals communicated through the substation host during the maintenance period. The fundamental protection function, however, would not be affected.

The organizational structure can, on the other hand, create maintenance problems. The maintenance of the data highway/smart switch that interconnects the signals from the data acquisition units to the protection processors would mean that the entire protection system would have to be disabled. In a completely integrated system this would mean that all line, transformer and bus protection from this system would be lost during maintenance of the data highway. Unless duplicate high speed protection is provided, this is unacceptable. Other solutions include developing techniques to maintain only portions of the data highway by adapting the European practice of removing equipment from service in order to maintain protection equipment. The maintenance of the processor to processor and processor to substation host interface also creates potential problems. If processor to processor communication is through Direct Memory Access or a common bus structure then maintenance is liable to affect the processors themselves. If a separate data highway is used for this purpose then it is possible to imagine that maintenance of this highway is equivalent to removing the substation host. That is protection features based on communication will be lost but primary protection is retained.

4. ROLE OF COMMUNICATIONS

4.1 INTRODUCTION

Communication consideration are central to any discussion on the implementation of adaptive protection. It is appropriate to think of these considerations in two categories:

(1) The needs imposed on the communication system by the adaptive function.

(2) The communication technology available to meet those needs.

The specific requirements for each adaptive function has been addressed in Chapters 2 and 3 as each function was discussed. Consideration was given to the type of information required, the speed with which it had to be received, the location of the source and destination of the signal. This information was embedded in the discussion of each function. In this chapter, the communication requirements are grouped by the overall communication category, i.e.–

- No communication requirements
- Low Speed
- High Speed
- Special Requirements

Before discussing the communication system(s) appropriate for each application, it will be useful to briefly review the available technology.

Each communication system has an inherent capacity and bandwidth, which can be related to the amount of information that can be accommodated and the time in which data is available for use. In addition, there are specific advantages, disadvantages and costs associated that must be considered. Since the factors involved may change in time, the basis for each decision is given so the appropriate reassessment can be made.

This report does not address the problem of standardization of communication protocols or hardware interfaces. It is recognized, however, that this issue is vital and the feasibility of implementing any of these adaptive concepts may hinge on the availability of standards.

4.2 COMMUNICATION NEEDS IN ADAPTIVE RELAYING

The purpose of using a communication channel in conjunction with protection systems is to convey information from the protection equipment within a

station or from one station to similar equipment at a remote station or to an operating control center. Various communication media are available.

- Pilot wires (aerial or buried systems)
- Power Line Carrier (PLC)
- Radio Links (microwave)
- Fiber Optic Links

The signal should be transmitted as fast as necessary with the highest possible dependability and security and with a high degree of availability.

Since the speed of propagation is of the order of the speed of light regardless of the communication media, the performance required by the communication system depends on the quantity of information to be sent and the required time for the application of the data. Shannon's Law states that the quantity of information transmitted by a channel is directly proportional to the bandwidth of the channel itself. At a fixed bandwidth the communication channel will be able to transmit a fixed amount of information per unit time for a given signal to noise ratio. Widening the bandwidth will increase the information capacity of the system but except for fiber optic links, makes it more susceptible to electrical noise.

The following discussion describes some technical aspects of each of these media.

Pilot wire has a bandwidth from 0 (dc) to 4 kHz. Attenuation is a function of cable type, cable length and frequency. The overhead cable is vulnerable to induced voltages by power line faults and lightning strokes. Buried cable is susceptible to damage by digging or animals. Line lengths are limited to maintain bandwidth and short transmission time.

Power Line Carrier has normal provision for one 4 kHz channel, operating over a carrier frequency of 30–300 kHz. The signal is capable of being transmitted over several hundred miles. The normal communication time (including the end devices) for a single 4 kHz channel is about 5ms. There is a high impulsive noise level created by line faults, lightning or breaker operation. The number of available frequencies is limited and the power is limited due to government regulations.

Radio (microwave) operates at frequencies between 150 MHz to 20 GHz. This bandwidth can be put at the disposal of teleprotection systems operating 4 kHz or implemented with many 4 kHz channels operating in parallel. The transmission of information is not normally influenced by induced noise from the power network but is subject to "fading" caused by atmospheric effects. The transmission length is

limited to line–of–sight between antennas. Repeaters can be used to extend the distance but costs and communication time increase rapidly.

Fiber Optic Links have virtually unlimited channel capacity, the index commonly used being XMHz–km. This means that the amplitude of an optical fiber having been modulated at XMHz is reduced to a half (6 db of attenuation) when the signal is propagated for 1 km. This index varies from 10–100 MHz–km for multi–mode, step index fiber, 200–1000 MHz–km for multi–mode, graded index and up to 100 kHz–km for single–mode fiber. This usually translates to over 8000 voice (4 kHz) channels per fiber. Fiber cable is immune to electric or magnetic interference, has extremely large bandwidth but must use repeaters if long distances are involved.

For the specific application of communication in an adaptive protection environment the requirements are determined by the following factors:

a. Type of information – Contact status, current or voltage phasors, etc.

b. Time required to use information – On–line operating function, steady–state response to on–line data acquisition, off–line study mode, etc.

c. Distance between device transmitting data and receiving it – Within a given device, panel or station, between stations, between station and control center.

d. Extent of communication network – Point–to–point, system–wide, dedicated channel, multiplexed data.

Based upon the discussion in Chapter 2, the following requirements are defined.

1. No communication requirements. Required information is part of the normal input to the appropriate processor. This is the situation in the following sections:

2.1.1 – Multi–terminal Line Protection – Adapting to System Load

2.1.2 – Adaptive Relay Settings – Adapting to pre–fault load, Source Impedance Ratio, Cold Load pick–up, line charging and line asymmetries.

2.1.3 – Series Compensation.

2.2 – Transformer and Bus Protection – Adapting to transformer tap position, estimating CT Ratio and providing variable speed/security.

2.3.1 – Adaptive Reclosing – Adapting to the type and severity of a fault, providing for "Hard vs. Soft" circuit breaker operation, optimizing circuit breaker wear and additional considerations.

2.3.3 – Breaker Failure – Adapting to the type and severity of a fault, minimum fault current, circuit breaker resistor insertion, set–up after close, prefault load.

2.3.4 – Capacitor Bank Protection

2. Low speed communication channel. This requirement is applied to those situations where there can be a hardwired connection between the relay and other devices in the station. For example, auxiliary switch contacts in a breaker wired to a microprocessor. Any point–to–point connection such as control cable or fiber optic, dedicated wires or multiplexed, is applicable.

This same requirement applies to communication of information between stations or system–wide that is required in a time frame of seconds or longer. For example, data acquisition systems, delayed reclosing interlocks or establishing steady–state configurations prior to using the information. Since there are no restricting speed requirements any of the 4 communication media are applicable subject only to cost, the amount of information to be transmitted (which will determine the number of channels) and the distance between transmitter and receiver (which will determine the attenuation).

This channel requirement applies to the following Sections:

2.1.1 – Multi–terminal Line Protection – Adapting to system switching or deriving a Thevenin equivalent.

2.1.2 – Adaptive Relay Settings – Same as 2.1.1.

2.1.4 – Parallel Line Protection – Using current data from several CTs within a station.

2.1.5 – Adaptive Security/Dependability – Using current or contact data from several devices within a station.

2.2.1 – Percentage Differential Protection – Determining excitation and flux levels, removing harmonic restraint or estimating CT Ratios.

2.2.2 – Monitoring Transformer Temperature – Adapting to hot spot or additional sensors, evaluating operating performance of fans,

pumps and other peripheral devices, adapting o/c relays.

2.2.3 – Adaptive Bus Protection – Estimating CT Ratios, Modifying Input–output during switching, adapting to different station configurations.

2.3.1 – Substation–wide Protection and Control – Controlling single phase reclosing, input to a remote computer to optimize circuit breaker wear or control restoration.

2.3.2 – Data Sharing – Replacing current and voltage inputs or monitoring circuit breaker status.

2.3.3 – Breaker Failure – Redirect trips for abnormal switching arrangements.

2.4.2 – Load Shedding and restoration

2.4.3 – Out–of–Step Blocking

2.4.4 – Synchronizing Check

2.4.5 – Steady–State Security

2.5 – Diagnostic and Alarm

2.6.1 – Monitoring of Operation, Settings and Parameters.

2.6.3 – Abnormal System Behavior.

3. High Speed Communication Channel – This requirement applies to those situations where the information must be received in the same time frame as the protective action itself, i.e., within a cycle or two. For example, the tripping or blocking signal in directional comparison or phase comparison schemes. Within a substation, hardwired connections using control cable, either with dedicated wires or in a multiplexed system, are applicable. When relatively short distances, e.g. about ten miles, are involved, pilot wire cable is suitable. For longer distances, Power Line Carrier (PLC) is required. Both systems are applicable only for command decisions, i.e. yes, no, on, off logic situations. PLC has the further limitation that the signal cannot be relied upon to be transmitted over a faulted line. Neither system is applicable for data transfer.

Microwave and Fiber Optic Links are applicable for all situations requiring high speed communication or large data transfers.

In the discussion of Chapter 2 this requirement applies to the following Sections:

2.1.1 – Multi–Terminal Lines – Adjusting the setting by the currents at all terminals.

2.1.4 – Parallel Line Protection.

2.3.1 – Reclosing – The use of a control computer to direct reclosing throughout the system.

2.3.2 – Data Sharing – To provide missing data if the error occurs during a fault or to provide data from a remote terminal.

4. Special high speed communication channel requirements involved in the area of dynamic state estimation are discussed in detail in Section 2.6.4. The large amount of data to be sent results in digital communication over radio or fiber optic cable being the only viable communication.

5. IMPLEMENTATION ASPECTS

5.1 INDUSTRY ACCEPTANCE

Protection engineers have very significant responsibility in terms of safety, equipment and system performance. In discharging these responsibilities, relay engineers traditionally and correctly, take a conservative approach to the introduction of new concepts or equipment. The present level of system protection is extremely high and is the direct result of this approach and represents years of experience. It should not be expected, therefore, that any dramatic changes, such as the adaptive protection and control concepts enumerated in this report, will be accepted without similar intensive review, proven theory and extensive field experience.

An apparent contradiction to this premise is the fact that throughout the spectrum of devices for power system protection and control there has actually been a continuous evolving technology.

Looking at the universal use today of bus differential relaying or communication links for pilot protection, it is hard to imagine the difficulty both concepts had in being accepted. In the bus differential case the effect of a false operation convinced many utilities that the gain was not worth the risk. For pilot protection many relay engineers had grave concerns over the reliability of the new carrier current schemes and were reluctant to include, within the discipline of power system protection, the different philosophy, jargon and technology associated with communication engineering.

The fact that both schemes are standard in today's protection picture attests to the relay engineers' recognition of the value of evolutionary change.

The shift from electromechanical to solid state technology is further evidence of the dichotomy between conservation and innovation. Solid state components first appeared in the 1960's with the very modest introduction of tripping diodes. The new technology expanded to include entire protection systems and spawned countless papers, field tests, the recognition of new environmental problems such as EMI and ambient temperature and the inclusion of many other disciplines not previously within the relay engineers' expertise. If we view the entire protection catalogue today, as compared to 10 or 20 years ago, the acceptance of solid state equipment is truly remarkable. Yet, at any given time, even today, there are pockets of application of electromechanical relays that have not yet been converted.

Other, less dramatic but equally significant, changes have been continually introduced. Harmonic restraint for transformer protection was a major conceptual innovation and accepted readily because it answered a specific need. Local backup and breaker failure schemes represented innovative concepts that were slowly introduced as a result of system growth and subtle changes in operating philosophies, despite the enlarged disruption that false trips caused. Integrated chip circuitry, fiber optics and microprocessors are all examples of new technologies that are being introduced and accepted.

The acceptance of the adaptive concepts will, of course, be dependent, first, on the acceptance of digital protection. Assuming this, however, we can expect that the Relaying Community will recognize the advantages inherent in the nature of software — dominated logic and processing. This use of digital relays is widespread in Japan where the unique cooperation between the government, manufacturers and utilities establishes a favorable climate to develop a product for a ready market. The adaptive possibilities were not examined in the Japanese early efforts but are now receiving their attention and will undoubtedly be added to their equipment. In the U.S. and Europe, despite much research activity, the introduction of digital protective equipment has not been as rapid as in Japan. This may be due to the competitive atmosphere which forces the manufacturer to avoid premature, costly, production commitments until the final product is defined by the user. In turn, the user is waiting to compare the products and prices being offered.

Once this circle of delay is broken, and the construction of lines and stations begins to pick up, we can expect the U.S. and European acceptance to mirror the Japanese.

In many respects, this preliminary activity is beneficial. The use of microprocessors in Programmable Controllers in power plants, Data Acquisition and SCADA Systems, monitoring and other process controls is rapidly increasing. The resulting reliable experience will allay many concerns and offer an opportunity for the relay engineers to become comfortable with this technology. This delay also provides the time to examine the concepts of adaptability within the overall design before these designs are entrenched.

All of these factors will accelerate industry acceptance.

5.2 SCENARIO FOR GRADUAL INTRODUCTION

It is obvious that all of the adaptive possibilities described in the previous

sections will not be adopted instantly. Rather, there will be a pattern of gradual acceptance based on certain prerequisites. Foremost among these prerequisites is the acceptance of microprocessor–based protection. Virtually every adaptive feature discussed depends on the intelligence of the microprocessors in the substation for its implementation. Few if any of the proposed adaptive functions have a practical analog realization.

It is assumed that digital protection will be gradually accepted for reasons already given in Chapter 1. The most important may be the digital relay's ability to communicate and its self monitoring and self diagnostic ability. The time scale of the acceptance of solid state relays (as opposed to electromechanical) may be used as a possible model. It seems clear that a period of construction of new lines and substations would accelerate the installation of digital relays.

Given a sufficient number of microprocessor–based protection units installed, the following scenario for gradual introduction is suggested. The order is based primarily on the communication requirements and the risk benefit ratio from a protection point of view.

1. Initial Introduction

The first features introduced will be items like remote (but non–adaptive) setting and those protection and control functions which required only information that is a normal input to the processor. A possible sequence might be:

- 2.3.1 – Adaptive Reclosing – Adapting to the type and severity of a fault, providing for "Hard vs. Soft" circuit breaker operation, optimizing circuit breaker wear and additional considerations.
- 2.3.3 – Breaker Failure – Adapting to the type and severity of a fault, minimum fault current, circuit breaker resistor insertion, set–up after close, pre–fault load.
- 2.1.2 – Adaptive Relay Settings – Adapting to pre–fault load, Source Impedance Ratio, Cold Load pick–up, line charging and line assymmetries.
- 2.1.1 – Multi–terminal Line Protection – Adapting to System Load
- 2.3.4 – Capacitor Bank Protection
- 2.1.3 – Series Compensation
- 2.2 – Transformer and Bus Protection – Adapting to transformer tap position, estimating CT Ratio and providing variable speed/security.

2. Second Stage

The next level of adaptive features in terms of acceptance are those where only low speed communication is required. These include hardwired connections between relays and other devices in the substation and low speed communications between substations. It is assumed that those features only requiring communications within the substation will be first.

- 2.1.4 – Parallel Line Protection – Using current data from several CTs within a station.
- 2.1.5 – Adaptive Security/Dependability – Using current or contact data from several devices within a station.
- 2.2.1 – Percentage Differential Protection – Determining excitation and flux levels, removing harmonic restraint or estimating CT Ratios.
- 2.2.2 – Monitoring Transformer Temperature – Adapting to hot spot or additional sensors, evaluating operating performance of fans, pumps and other peripheral devices, adapting overcurrent relays.
- 2.2.3 – Adaptive Bus Protection – Estimating CT Ratios, Modifying Input–output during switching, adapting to different station configurations.
- 2.3.2 – Data Sharing – Replacing current and voltage inputs or monitoring circuit breaker status.
- 2.3.3 – Breaker Failure– Redirect trips for abnormal switching arrangements.
- 3.6.1 – Monitoring of Operation, Settings and Parameters
- 2.6.3 – Abnormal System Behavior
- 2.1.1 – Multi–terminal Line Protection – Adapting to system switching or deriving a Thevenin equivalent.
- 2.1.2 – Adaptive Relay Settings – Adapting to system switching or deriving a Thevenin equivalent.
- 2.3.1 – Substation–wide Protection and Control – Controlling 1 phase reclosing, input to a remote computer to optimize circuit breaker wear or control restoration.
- 2.4.2 – Load Shedding and restoration.
- 2.4.3 – Out–of–Step Blocking.
- 2.4.4 – Synchronizing Check.
- 2.4.5 – Steady–State Security.

- 2.5 – Diagnostic and Alarm.

3. Third Stage

The next level of adaptive features are those where high speed communication are required. It is assumed that a concern for the reliability of high speed communication will retard the introduction of these features until fiber optic communication links become common.

- 2.1.1 – Multi–Terminal Lines – Adjusting the setting by the currents at all terminal
- 2.1.4 – Parallel Line Protection.
- 2.3.1 – Reclosing – The use of a central computer to direct reclosing throughout the system.
- 2.3.2 – Data Sharing – To provide missing data if the error occurs during a fault or to provide data from a remote terminal.
- 2.6.4 – Dynamic State Estimation – Detection of Instability

Exceptional situation may result in isolated application of one of the more advanced features where it presents the only solution to a problem. For example, a limited form of dynamic state estimation for detection of instability might be used with a few dedicated fiber links at a particularly sensitive interconnection. In general, however, it is felt that it is likely to be a period of decades before the requisite experience is gained with digital protection and fiber optic links to allow the acceptance of the more advanced adaptive features.

6. CONCLUSIONS

In this report, we have introduced the field of Adaptive Protection as a viable field of study. We have examined over 20 separate relaying practices where present technology places limitations, and adaptive technology offers improvements. Based upon the detailed analysis in the report, it can be concluded that computer network based adaptive relaying is certainly possible today. Adaptive relaying will be introduced in an incremental manner. The degree of adaptability will be governed by the communication facilities available to the Electric Utilities, and the quality of service provided by these communication facilities. Although most adaptive relaying ideas can be implemented now, several concepts require considerable analytical development. These consideration show that there is room for much additional work before adaptive relaying becomes accepted industry practice.

In the previous chapters, we discussed various concepts in Adaptive Relaying. Many opportunities for adaptive relaying have been identified, and several concepts were discussed in considerable detail. It would be well to provide an overview of our findings before discussing areas for future research. Following aspects of adaptive relaying are particularly significant:

(1) Adaptive relaying presupposes computer–based relays and an integrated system for protection and control. It would be possible to cite exceptions to this observation, however, the true flavor of adaptive relaying as explored in this report comes through only with computer–based relays. Programmable settings, operating principles, and input–output assignments are necessary to make the relaying adaptive.

(2) Communication between computers at various levels of the hierarchy is an essential element of many adaptive features. To adapt, the relay must know that something external to it has changed; and it can know this only through communication with other devices. Communication may be local — within a substation – or it could be with remote sites.

(3) Some adaptive features could be pre–programmed, and do not need communication facilities. This idea simply extends the normal adaptive abilities of existing relays. For example, through

programming, one could make an overcurrent relay adapt to varying pre–fault loadings. No new inputs are required to achieve this adaptability.

(4) Adaptive relaying begins to become a branch of power system control. Indeed, the elements of a control system – system measurements and access to switching devices – already exist in the protection systems. One can thus foresee the adaptive relaying practices and control practices for power system become a single discipline in the future.

(5) The acceptability of adaptive relaying will be determined by the acceptability of computer relays. Also, adaptive features that are closer to control functions are likely to be accepted first, and those adaptive features which change primary protection functions will be the last to gain acceptance.

In view of these observations, and with the previous chapters as a basis, the following areas seem worthy of further research. It should be emphasized that research in this field must be conducted with participation of engineers actively working in the field of protection. Many ideas can be explored in an analytical context – however, they must be related to present protection practices in order to produce results of practical and lasting engineering significance.

Research Area 1: Engineering Studies

It is proposed that engineering studies (short circuit, load flow, and stability) be performed on representative systems in order to provide quantitative measure of effectiveness of proposed adaptive protection features.

Research Area 2: Generator–axis based load flow.

In developing many of the stability related adaptive protective functions, it became clear that reduced–order load flow technique with generator internal buses as the frame of reference would be highly desirable. This is a theoretical study, and its solution (as demonstrated on realistic systems) would provide significant help in many areas of power system engineering.

Research Area 3: Synchronous clocks for substations.

Many ideas presented in the report are based upon the ability to measure phasors on a common reference frame. It is recommended that a detailed research be undertaken to determine means and feasibility of providing synchronous clock pulses to within a few micro–seconds of each other at power system substations. A nation–wide synchronous clock system would be highly desirable, and is certainly

within the realm of existing technological development.

Research Area 4: Measurement based control.

With real–time phasor measurements, many of the existing control and protection tasks can be improved. This subject is ideal for a major research effort: to select measurement points, frequency of measurements, and a formal control theory to make use of these measurements in order to improve the quality of the control and protection provided.

Research Area 5: Field Experiment.

It is proposed that several of the adaptive functions discussed in this report be installed and tested on a power system on a trial basis. Clearly the simplest adap– tive functions should be tried first. Adaptive reclosing may well be the ideal candidate for such a field experiment. A sequence of field trials should be drawn–up, and a joinnt effort with participating utilities should be initiated.

Research Area 6: Susceptibility of Relay Systems to Loss of Security.

It is proposed that the present relaying practices and systems be examined in detail to determine precisely how they fail, and what would be the impact of their failure on the availability of the power systems. Single (undetected) defects in the relay systems will be postulated. This mode of failure of relay systems seems to be the main cause of major power system disruptions.

7. REFERENCES

[1] H. Ungrad, V. Narayan, "Behavior of Distance Relays under Earth Fault Conditions on Double–Circuit Lines", Brown Boveri Publications CH–ES 35–30.14E.

[2] A. G. Phadke, Lu Jihuang, "A New Computer Based Integrated Distance Relay for Parallel Transmission Lines", Trans. of IEEE on PAS, Vol. PAS–104, No. 2, February 1985, pp. 445–452.

[3] A. G. Phadke and J. S. Thorp, "A New Computer–based flux–restrained Current Differential Relay for Power Transformer Portection", Trans. of IEEE on PAS, Nov. 1983, pp. 3624–3629.

[4] Automatic Reclosing of Transmission Lines, IEEE PSRC Report, IEEE PAS Feb., 1984, pp. 234–239.

[5] Gillies, D. A., "Operating Experience with 230–Kv Automatic Reclosing on Bonneville Power Administration System", AIEE Trans. No. 16, Feb. 1955, pp. 1625–1696.

[6] Sporn, P. and Muller, C. A., "Five Years Expereience with Ultra High Speed Reclosing of High–voltage Transmission Lines", AIEE Trans., Vol. 60, 1941, pp. 241–246.

[7] Dunlop, R. D., Horowitz, S. H., Jooyce, J. S., Lambrecht, D., "Torsional Oscillation and Fatigue of Steam Turbine–Generator Shafts Caused by System Disturbances and Switching Events", CIGRE 1980–Paper, 11–06.

[8] Bowler, C. E. J., Brown, P. G., Walker, D. N., "Evaluation of the Effect of power Circuit Breaker Reclosing Practices on Turbine–Generator Shafts", IEEE Trans on PAS, Sept./Oct. 1980, pp. 1764–1779.

[9] Fakheri, A. J., Shuter, T. C., Schneider, J. M., Shih, C. H., "Single Phase Switching Tests on the AEP 765 kV System–Extinction Time for Large Secondary Arc Currents",IEEE Trans on PAS, Aug. 1983, pp. 2775–2783, Correction Nov. 83, p. 3705.

[10] L. F. Kennedy and A. J. McConnel, "An Appraisal of Remote and Local Back–up Relaying", AIEE Trans. Vol. 76, pp. 735–741, October 1957.

[11] IEEE Committee Report, "Local Back–up Relaying Practices", IEEE Trans on PAS, Vol. PAS–89, pp. 1061–1068, July/August, 1970.

[12] D. R. Holland, G. E. McNair, G. D. Paridis, J. Senuta, W. H. Van Zee, "Connemaugh Project: New Concepts for 500 kV System Protection", IEEE Trans on PAS, Vol. PAS–90, pp. 852–858, March/April 1971.

[13] H. F. VanLandingham, D. K. Lindner, A. G. Phadke, A. Jayakumar, "A Nonlinear Observer Applied to State Estimation of a Synchonous Generator", (Short Paper), IECON–84, Tokyo, October, 1984.

[14] J. E. Van Ness and F. M. Brasch, "Applications of multi–processors to Power System Stability Problems", EPRI Seminar on Exploring Applications of Digital Parallel Processing to Power Systems Analysis Problems", October, 1977.

[15] T. Athay, R. Podmore, S. Virmani, "A Practical Method for the Direct Analysis of Transient Stability", IEEE Trans. on PAS, Vol. PAS–98, No. 2, March/Aprill 1979, pp. 573–581.

[16] C. L. Gupta, A. H. El–Abiad, "Transient Security Assesment of Power Systems by Pattern Recognition", 1977 IEEE Summer Power Meeting, San Francisco, CA.

[17] H. E. Brown, "Contingencies Evaluated by a Z–Matrix Method", IEEE Trans on PAS, Vol. PAS–88, No. 4, April 1969, pp.409–412.

[18] H. D. Limmer, "Techniques and Applications of Security Calculations Applied to Dispatching Computers", Power System Computation Conference, 1969, Rome.

[19] H. W. Dommel, W. F. Tinney, "Optimal Power Flow Solutions", IEEE Trans on PAS, Vol. PAS–87, No. 10, October 1968, pp. 1866–1876.

[20] H. Happ, "Optimal Power Dispatch — A Comprehensive Survey", IEEE Trans on PAS, Vol. PAS–96, May/June 1977, pp. 841–854.

[21] B. Stott and E. Hobson, "Power System Security Control Calculations Using Linear Programming", IEEE Trans on PAS, Vol. PAS–97, Oct. 1978, pp. 1712–1731.

[22] F. Albuyeh, A. Bose, B. Heath, "Reactive Power Considerations in Automatic Contingency Selection", Proceedings of 1981 PICA, Philadelphia, PA, 1981.

[23] Marija Ilic–Spong and A. G. Phadke, "Redistribution of Reactive Power Flow in Contingency Studies", Proceedings of PICA, 1985, San Francisco.

[24] M. Ilic–Spong, M. Varghese, "On a Reactive Power Fault Modeling in Large Scale Electric Power Systems", Proceedings of the 21st Allerton Conference, University of Illinois, October, 1983.

[25] C. Barbier, Jean–Paul Barret, "An Analysis of Phenomenon of Voltage Collapse on a Transmission System", Revue Generale d'Electricite, Special Issue, July 1980, pp. 672–690.

[26] Blanchon, G., "A New Aspect of Studies of Reactive Energy and Voltages of the Networks", PSCC Proceedings, 1972.

[27] Lachs, W., "Reactive Power Control in System Emergencies", IEE Conf. Publication No. 197, International Conference on Monitoring.

[28] B. Toumi, R. Dhifaoui, Th. Van Cutsem, M. Ribbens–Pavella, "Fast Transient Stability Assessment Revisited", Trans. of IEEE on Power Systems, Vol. PWRS–1, No. 2, May 1986, pp. 211–220.

[29] A. A. Fouad, A. Ghafurian, K. Nodehi, Y. Mansour, "Calculation of Generation–Shedding Requirements of the B.C. Hydro System Using Transient Energy Functions", Trans. of IEEE on Power Systems, Vol. PWRS–1, No. 2, May 1986. pp. 17–24.

[30] Y. Ohura, K. Matsuzawa, H. Ohtsuka, N. Nagai, T. Gouda, H. Oshida, S. Takeda, S. Nishida, "Development of a Generation Tripping System for Transient Stability Augumentation based on the Energy Function Method", Paper No. 86 WM 117–6, IEEE Winter Power Meeting, February 1986, New York.

[31] N. Cohn, CONTROL OF GENERATION AND POWER FLOW ON INTERCONNECTED SYSTEMS, John Wiley & Sons., 1971.

[32] R. W. Ohnesorge, T. A. Pruitt, "Operational Aspects of the Southern–Florida Interface: Past, Present and Future", presented at the 1984 Georgia Tech Realy Conference, May 1984.

[33] A. N. Darlington, "Response of Underfrequency Relays on the Peninsular Florida Electric System for Loss of Generation", presented at the 1978 Georgia Tech Relay Conference, May 1978.

[34] E. L. Harder, W. E. Marter, "Principles & Practices of Relaying in the United States", AIEE Trans. Vol. 69, pp. 1005–1022, 1948.

[35] H. C. Barnes, A. Hauspurg, J. H. Kinghorn, "Relay Protection of Ohio Valley Electric Corporation 330kV System", AIEE Trans. Vol. 75, pp. 5613–625, August, 1956.

[36] L. F. Kennedy, A. J. McConnell, "An Appraisal of Remote & Local Backup Relaying", AIEE Trans. Vol. 76, pp. 735–741, October, 1957.

[37] AIEE Committee Report, "Recent Practices & Trends in Protective Relaying", AIEE Trans. PT IIIB Vol. 78, pp. 1759–79, 1959.

[38] AIEE Committee Report, "Supplement to Recent Practices & Trends in Protective Relaying", AIEE Trans. PAS–83, pp. 1064–1067, October, 1964.

[39] Northeast Power Failure – November 9–10, 1965 – A Report to the President by the Federal Power Commission, Dec. 6, 1965.

[40] IEEE Committee Report, "Local Backup Relaying Protection", IEEE Trans. PAS–89, pp. 1061–1068, July/August, 1970.

[41] Final Report on Computer Based Protection and Digital Techniques in Sub–stations (1986), CIGRE Study Committee 34, Work Group 02.

[42] P. Delcominette, J. M. Delince, P. Van Miegroet, "Remote Control, Local Control and Automatic Control in Substations", CIGRE 1980, paper 32.09.

[43] J. M. Tesseron et al, "Digital Processing of Control, Protection, and Communication Function in EHV Substation: An Analysis of Operating Requirements and Present Research", CIGRE Study Committee 34 Colloquium, Tokyo, Japan, November 1983.

8. GLOSSARY OF COMMONLY USED ACRONYMS

ACE	Area Control Error
A/D	Analog to Digital Converter
CIGRE	Conférence Internationale des Grand Réseaux Électriques
CPU	Central Processing Unit
CT	Current Transformer
CVT	Capacitive Voltage Transformer
DMA	Direct Memory Access
FDX_x	Fault Detector. (X stands for High or Low)
HVDC	High Voltage Direct Current
I	Current
IEEE	Institute of Electrical and Electronics Engineers
I/O	Input – Output
kV	Kilo Volts
kVA	Kilo Volt Amperes
kVAR	Kilo Volt Amperes Reactive
LTC	Load Tap Changing
MFLOPS	Mega Floating Point Operations
MW	Mega watts
PEBS	Potential Energy Boundary Surface
PLC	Power Line Carrier
PSRC	Power System Relaying Committee
Z	Impedance

9. APPENDIX

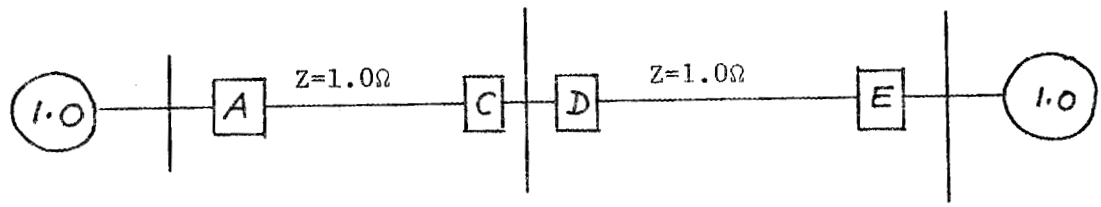

$$Z_{\substack{A-C \\ ACT}} = \underline{1.0 \text{ ohm}}$$

$$Z_{\substack{A-C \\ ACT}} = Z_{\substack{A-C \\ APP}}$$

$$Z_{T_{A-C}} = 150\% \times Z_{\substack{A-C \\ APP}} = \underline{1.5 \text{ ohms}}$$

ASSUME BASE MVA = 1000

$$Z_{T_{LOADABILITY}} = \frac{1000}{Z_r} = \frac{1000}{1.5} = \underline{666.7 \text{ MVA}}$$

$$Z_{\substack{1 \\ A-C}} = 90\% \; Z_{ACT} = \underline{0.9 \text{ ohms}}$$

$$\text{COVERAGE} = \frac{Z_{1_{A-C}}}{Z_{APP}} = \frac{.9}{1.0} = \underline{90\ \%}$$

$$Z_{\substack{2 \\ A-C}} = 120\ \%\ Z_{APP} = \underline{1.2 \text{ ohms}}$$

$$\text{OVERREACH} = Z_2 - Z_{ACT} = 1.2 - 1.0 = \underline{0.2 \text{ ohms}}$$

Figure A–1: Configuration 1 — Two–Terminal Line

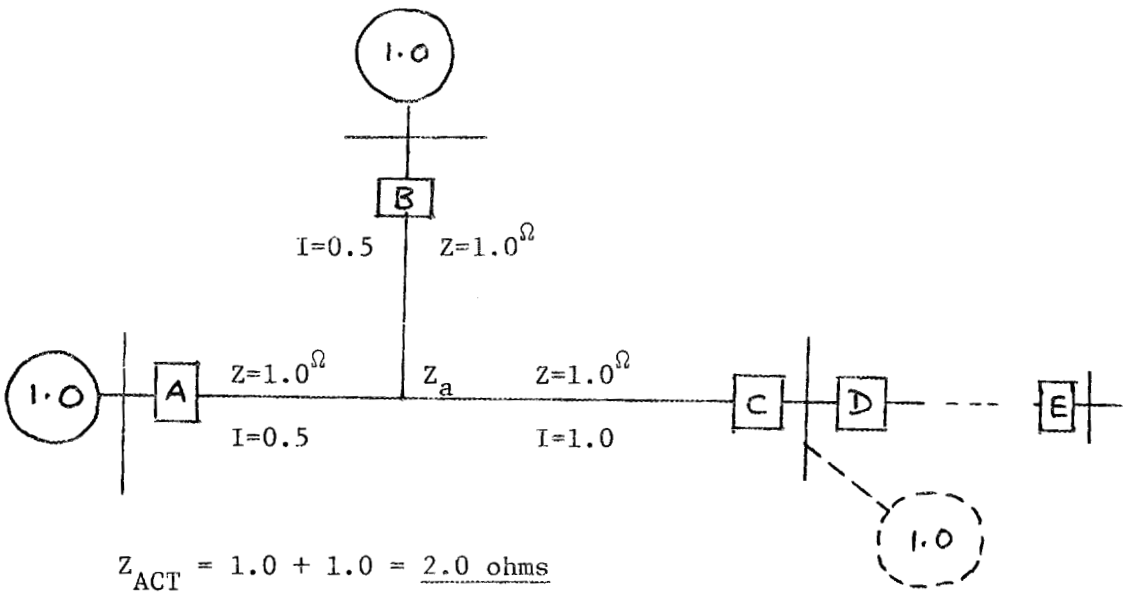

Z_{ACT} = 1.0 + 1.0 = 2.0 ohms
A-C & B-C

$$Z_{APP} = \frac{(0.5)(1.0) + (1.0)(1.0)}{0.5} = 3.0 \text{ ohms}$$
A-C & B-C

Z_r = 150% x 3.0 = 4.5 ohms LOADABILITY = $\frac{1000}{4.5}$ = 222 MVA

Z_1 90% x 2.0 = 1.8 ohms (SET W/O x 'F's)
A-C & B-C

% COVERAGE W/ x'F's: $1.8 = \frac{(0.5)(1.0) + (1.0)(Z_R)}{0.5}$

$0.9 = 0.5 + Z_R$

Z_R = 0.4 RELAY SEES 1.0 + .4 = 1.4 ohms

$$\% \text{ COVERAGE} = \frac{\text{REACH}}{Z_{ACT}} = \frac{1.4}{2} = 70\%$$

Z_2 = 120% x Z_{APP} = 1.2 ✱ 3.0 = 3.6 ohms
A-C & B-C

CHECK OVERREACH W/O x'F's $Z_2 - Z_{ACT}$

3.6 - 2.0 = 1.6 ohms

Figure A.2: Configuration 2 — Equal Legs & Equal Source Impedances

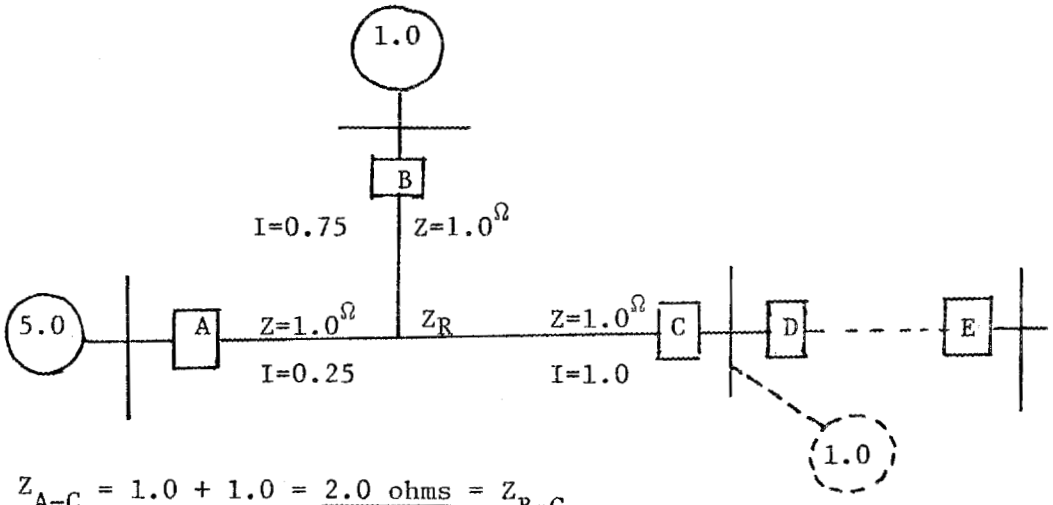

$Z_{\substack{A-C\\ACT}} = 1.0 + 1.0 = \underline{2.0 \text{ ohms}} = Z_{\substack{B-C\\ACT}}$

$Z_{\substack{A-C\\APP}} = \dfrac{(0.25)(1.0) + (1.0)(1.0)}{0.25} = \underline{5.0 \text{ ohms}}$

$Z_{\substack{A-C\\T}} = 150\% \times 5.0 = \underline{7.5 \text{ ohms}}$ LOADABILITY $= \dfrac{1000}{7.5} = \underline{133 \text{ MVA}}$

$Z_{\substack{A-C\\1}} = 90\% \times Z_{ACT} = \underline{1.8 \text{ ohms}}$

% COVERAGE: $1.8 = \dfrac{(0.25)(1.0) + (1.0)(Z_R)}{0.25}$ $0.45 = 0.25 + Z_R$

$Z_R = 0.2$ ohms

REACH $= 1.0 + 0.2 = 1.2$ ohms

% COVERAGE $= \dfrac{1.2}{2} = \underline{60\%}$

$Z_{\substack{A-C\\2}} = 120\ \% \times A_{APP} = 5.0 \times 1.2 = \underline{6.0 \text{ ohms}}$

OVERREACH $= 6.0 - 2.0 = \underline{4.0 \text{ ohms}}$

$Z_{\substack{B-C\\APP}} = \dfrac{(0.75)(1.0) + (1.0)(1.0)}{0.75} = \underline{2.3 \text{ ohms}}$

$Z_{\substack{B-C\\T}} = 1.5 \times 2.3 = \underline{3.5 \text{ ohms}}$ LOADABILITY $= \dfrac{1000}{3.5} = \underline{285.7 \text{ MVA}}$

$Z_{\substack{B-C\\1}} = .9 \times 2.0 = \underline{1.8 \text{ ohms}}$ COVERAGE: $1.8 = \dfrac{(0.75)(1.0)+(1.0)(Z_R)}{0.75}$

$Z_R = 1.35 - 0.75 = 0.6$

$\dfrac{1.6}{2.0} = \underline{80\%}$

$Z_{\substack{B-C\\2}} = 1.2 \times 2.3 = 2.79$ ohms OVERREACH $= 2.79 - 2.0 = \underline{0.79 \text{ ohms}}$

Figure A.3: Configuration 3 — Equal Legs & Unequal Sources

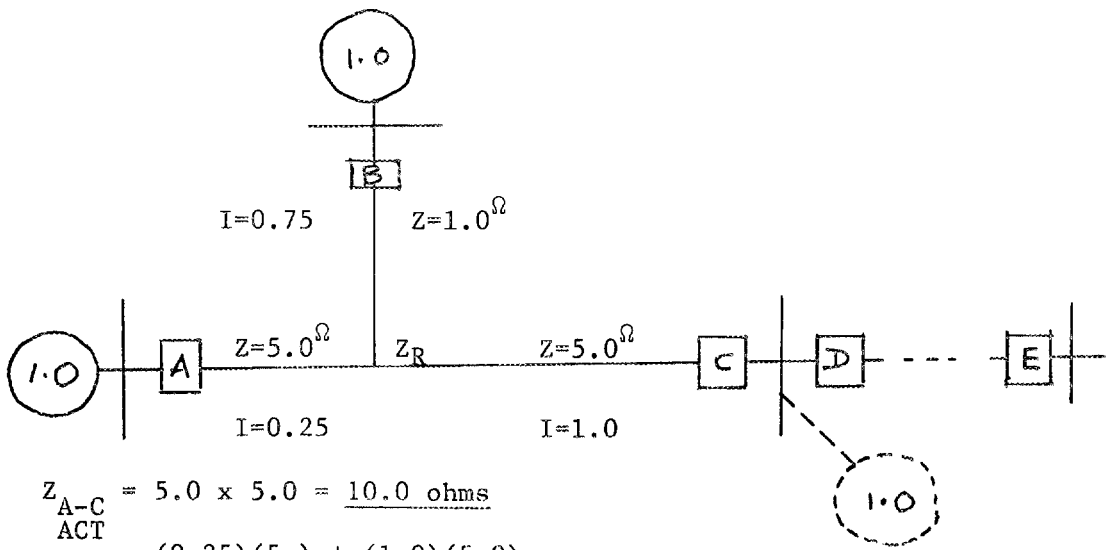

$Z_{A-C\ ACT} = 5.0 \times 5.0 = \underline{10.0 \text{ ohms}}$

$Z_{A-C\ APP} = \dfrac{(0.25)(5.) + (1.0)(5.0)}{0.25} = \underline{25.0 \text{ ohms}}$

$Z_{A-C\ T} = 150\% \times 25 = \underline{37.5 \text{ ohms}}$ LOADABILITY $= \dfrac{1000}{37.5} = \underline{26.6 \text{ MVA}}$

$Z_{A-C\ 1} = 90\% \times 10 = \underline{9.0 \text{ ohms}}$ COVERAGE: $9 = \dfrac{(0.25)(5.0)+(1.0)(Z_R)}{0.25}$

$2.25 - 1.25 = Z_R$

$Z_R = 1.0$

REACH IS $5.0 + 1.0 = 6.0$

$\dfrac{6.0}{10} = \underline{60\%}$

$Z_{A-C\ 2} = 120\% \times 25 = \underline{30 \text{ ohms}}$

OVERREACH $= 30-10 = \underline{20 \text{ ohms}}$

$Z_{B-C\ ACT} = 5.0 + 1.0 = \underline{6.0 \text{ ohms}}$

$Z_{B-C\ APP} = \dfrac{(0.75)(1.0) + (5.0)(1.0)}{0.75} = \underline{7.67 \text{ ohms}}$ $Z_{B-C\ T} = 150\% \times 7.67 = \underline{11.5 \text{ ohms}}$

LOADABILITY $= \dfrac{1000}{11.5} = \underline{86.9 \text{ MVA}}$

$Z_{B-C\ 1} = 90\% \times 6 = \underline{5.4 \text{ ohms}}$ COVERAGE: $5.4 = \dfrac{(0.75)(1.0)+(1.0)(Z_R)}{0.75}$

$Z_R = 3.3$

REACH $= 1.0 + 3.3 = 4.3$

COVERAGE $= \dfrac{4.3}{6} = \underline{71.6\%}$

$Z_{B-C\ 2} = 120\% \times 7.67 = \underline{9.2 \text{ ohms}}$ OVERREACH $- 9.2 - 6 = \underline{3.2 \text{ ohms}}$

Figure A.4: Configuration 4 — Unequal Legs & Equal Sources

ORNL/Sub/85-22005/1
Dist. Category UC-97a

INTERNAL DISTRIBUTION

1-4. T. A. Bales
5. P. R. Barnes
6. R. S. Carlsmith
7. S. J. Dale
8. S. D. Floyd
9. W. Fulkerson
10. M. R. Hilliard
11. A. M. Hutton
12. J. O. Kolb
13. M. A. Kuliasha
14. T. G. Patton
15. G. T. Privon
16. S. L. Purucker
17. D. E. Reichle
18-22. D. T. Rizy
23. Eleanor Rogers
24. D. J. Slaughter
25. J. P. Stovall
26. T. J. Wilbanks
27. ORNL Patent Office
28. Central Research Library
29. Document Reference Section
30-32. Laboratory Records
33. Laboratory Records-RC

EXTERNAL DISTRIBUTION

36. Mr. Robert W. Beckwith, 3229 San Bernadino, Clearwater, FL 33519.
37. Dr. Peter D. Blair, Office of Technology Assessment, U.S. Congress, Washington, DC 20510-8025
38. Mr. Warren S. Bollmeier, II, Solar Energy Research Institute, 1617 Cole Boulevard, Golden, CO 80401.
39. R. T. Byerly, Electric Research Management, P. O. Box 165, State College, PA 16804.
40. Mr. Rene Castenschiold, Sutomatic Switch Co., Florham Park, NJ 07932.
41. J. W. Chadwick, Tennessee Valley Authority, 1S51 H Lookout Place, 1101 Market Street, Chattanooga, TN 37402-2801.
42. J. J. Cuttica, Vice President of Research and Development, Gas Research Institute, 8600 W. Bryn Mawr Avenue, Chicago, IL 60631.
43. Mr. D. C. Dawson, Southern California Edison Co., P. O. Box 800, Rosemead, CA 91770.
44. Mr. R. W. Dempsey, Potomac Electric Power Co., 1900 Pennsylvania Ave., N.W., Washington, DC 20068.
45. Mr. Richard DeBlasio, Solar Energy Research Insitute, 1617 Cole Blvd., Golden, CO 80401.
46. Mr. Paul Duks, Underwriters Laboratories, 333 Pfingsten Road, Northbrook, IL 60062.
47. Russell Eaton, DOE CE-143, Office of Energy Storage & Dist., Forrestal Building, MS-5E052, 1000 Independence Ave., SW, Washington, DC 20585
48. W. E. Feero, Electric Research Management, Inc., P. O. Box 165, State College, PA 16804.
49. Mr. R. J. Fernandez, Pennsylvania Power and Light Co., 2 North Ninth St., Allentown, PA 18101.
50. Mr. N. Richard Friedman, Resource Dynamics Corporation, 8605 Westwood Center Dr., Vienna, VA 22180.
51. Mr. J. H. Galloway, Rapid Electric Co., Inc., P. O. Box 291, Brookfield, CT 06804.

52. Ms. Louise Germani, IEEE Standards Office, 345 East 47th St., New York, NY 10017.
53. Mr. C. H. Griffin, Chairman, Georgia Power Co., P. O. Box 4545, Atlanta, GA 30302.
54. K. L. Hicks, Stone & Webster Engineering Corp., 245 Summer Street, Boston, MA 02107.
55. Mr. Kent H. Hoffman, Carolina Power and Light Co., P. O. Box 1551, Raleigh, NC 27602.
56. J. W. Horwitch, Energetics, Inc., 9210 Route 108, Columbia, MD 21045.
57. Mr. Gordon Johnson, Kohler Company, 444 Highland Drive, Kohler, WI 53044.
58. Dr. Gary Jones, Division 6223, Sandia National Laboratories, P. O. Box 5800, Albuquerque, NM 87185.
59. Mr. E. W. Kalstein, E. I. duPont deNemours & Co., Engineering Dept., L53N30, Wilmington, DE 19898.
60. Dr. Edward C. Kern, Jr., Ascension Technology, P. O. Box 121, Lincoln Center, MA 01773.
61. Dr. M. Kezunovic, Texas A&M University, Dept. of Electrical Engineering, College Station, Texas 77843-3128.
62. K. W. Klein, Director US/DOE, CE-32, Office of Energy Storage & Dist., Forrestal Building, MS-5E052, 1000 Independence Ave., SW, Washington, DC 20585
63. Mr. J. L. Koepfinger, Duquesne Light Co., One Oxford Centre, 301 Grant St., Pittsburgh, PA 15279.
64. Mr. T. J. Kolenda, Bechtel Power Corporation, 15740 Shady Grove Road, Gaithersburg, MD 20877.
65. Mr. Robert L. Linden, General Electric Co., Project Engineering Operation, 1 River Rd., Bldg. 23, Room 309, Schenectady, NY 12345.
66. J. R. Linders, Consultant, Stone & Webster Engineering Corp., 245 Summer Street, Boston, MA 02107.
67. Mr. Paul Longrigg, Solar Energy Research Institute, 1617 Cole Blvd., Golden, CO 80401.
68. Mr. Hans Meyer, Omnion Power Engineering, W297 S11085 Hwy. ES, Mukwonago, WI 53149.
69. Mr. Joseph Miller, Long Island Lighting Co., 175 E. Old Country Rd., Hicksville, NY 11803.
70. D. E. Morrison, Professor of Sociology, Michigan State University, 201 Berkey Hall, East Lansing, MI 48824-1111.
71. Mr. William J. Moylan, Moylan Engineering Assoc., Inc., 13530 Michigan Ave., Suite 237, Dearborn, MI 48126.
72. J. Nicol, A. D. Little, Inc., Acorn Park, Cambridge, MA 02140.
73. Mr. Philip A. Nobile, Power Technology Consultants, PA, 6 Highland Cross, Rutherford, NJ 07070.
74. Dr. Gerald L. Park, Dept. of Electrical Engineering, Engineering Building, Michigan State University, East Lansing, MI 48824.
75. R. L. Perrine, Professor, Engineering and Applied Sciences, Civil Engineering Department, Engineering I, Room 2066, University of California, Los Angeles, CA 90024.
76. A. G. Phadke, Auburn University, Electrical Engineering Department, Auburn, AL 36849.
77. Mr. A. Pivec, Public Service Electric & Gas Co., 80 Park Plaza, T16A, P. O. Box 570, Newark, NJ 07101.
78. Dr. Hans B. Puttgen, School of Electrical Engineering, Georgia Tech, Atlanta, GA 30332.
79. G. D. Rockefeller, Electric Research Management, Inc., P. O. Box 165, State College, PA 16804.

80. D. J. Roesler, Department of Energy CE-143, Office of Energy Storage & Dist., Forrestal Building, MS-5E052, 1000 Independence Ave., SW, Washington, DC 20585
81. Mr. D. W. Selby, Square D Company, 330 Weakley Road, Smyrna, TN 37167.
82. Mr. John Stevens, Division 6223, Sandia National Laboratories, P. O. Box 5800, Albuquerque, NM 87185.
83. Mr. Charles L. Wagner, 4933 Simmons Drive, Export PA, 15632.

84-274. Given Distribution as shown in DOE/OSTI under category UC-97a. (Elec. Util. Sys. Trans.)

☆ U.S. GOVERNMENT PRINTING OFFICE: 1989— 748 - 114 /00097