ornl

ORNL/TM-11173

OAK RIDGE
NATIONAL
LABORATORY

MARTIN MARIETTA

# Coal-Burning Technologies Applicable to Air Force Central Heating Plants

J. F. Thomas
J. M. Young

OAK RIDGE NATIONAL LABORATORY
CENTRAL RESEARCH LIBRARY
CIRCULATION SECTION
4500N ROOM 175
LIBRARY LOAN COPY
DO NOT TRANSFER TO ANOTHER PERSON
If you wish someone else to see this report, send in name with report and the library will arrange a loan.

OPERATED BY
MARTIN MARIETTA ENERGY SYSTEMS, INC.
FOR THE UNITED STATES
DEPARTMENT OF ENERGY

This report has been reproduced directly from the best available copy.

Available to DOE and DOE contractors from the Office of Scientific and Technical Information, P.O. Box 62, Oak Ridge, TN 37831; prices available from (615) 576-8401, FTS 626-8401.

Available to the public from the National Technical Information Service, U.S. Department of Commerce, 5285 Port Royal Rd., Springfield, VA 22161.
NTIS price codes—Printed Copy: A06 Microfiche A01

This report was prepared as an account of work sponsored by an agency of the United States Government. Neither the United States Government nor any agency thereof, nor any of their employees, makes any warranty, express or implied, or assumes any legal liability or responsibility for the accuracy, completeness, or usefulness of any information, apparatus, product, or process disclosed, or represents that its use would not infringe privately owned rights. Reference herein to any specific commercial product, process, or service by trade name, trademark, manufacturer, or otherwise, does not necessarily constitute or imply its endorsement, recommendation, or favoring by the United States Government or any agency thereof. The views and opinions of authors expressed herein do not necessarily state or reflect those of the United States Government or any agency thereof.

ORNL/TM-11173

Air Force Coal Utilization/Conversion Program

# COAL-BURNING TECHNOLOGIES APPLICABLE TO AIR FORCE CENTRAL HEATING PLANTS

J. F. Thomas J. M. Young

Date Published - December 1989

Prepared for the
Air Force Engineering and Services Center
Tyndall Air Force Base, Florida

Prepared by the
OAK RIDGE NATIONAL LABORATORY
Oak Ridge, Tennessee 37831
operated by
MARTIN MARIETTA ENERGY SYSTEMS, INC.
for the
U.S. DEPARTMENT OF ENERGY
under contract DE-AC05-840R21400

MARTIN MARIETTA ENERGY SYSTEMS LIBRARIES

3 4456 0328578 1

**CONTENTS**


| | Page |
|---|---|
| LIST OF FIGURES | vii |
| LIST OF TABLES | ix |
| LIST OF SYMBOLS, ABBREVIATIONS, AND ACRONYMS | xi |
| ABSTRACT | 1 |
| 1. INTRODUCTION | 1 |
| 2. SUMMARY | 3 |
| 2.1 CHARACTERISTICS OF AIR FORCE HEATING PLANTS | 3 |
| 2.2 REPLACEMENT BOILERS | 4 |
| 2.3 REFIT TO COAL BURNING | 5 |
| 2.4 RECOMMENDATIONS | 8 |
| 3. DESCRIPTION OF REPLACEMENT OR EXPANSION TECHNOLOGIES | 9 |
| 3.1 BOILER DESIGN | 9 |
| 3.1.1 Shell (Fire-Tube) Boilers | 9 |
| 3.1.2 Water-Tube Boilers | 10 |
| 3.1.3 Packaged vs Field-Erected Construction | 11 |
| 3.2 STOKER FIRING | 11 |
| 3.2.1 Description | 11 |
| 3.2.2 State of Development | 15 |
| 3.2.3 Performance | 15 |
| 3.2.4 Operational Problems/Risks | 16 |
| 3.3 PULVERIZED COAL FIRING | 17 |
| 3.3.1 Description | 17 |
| 3.3.2 State of Development | 18 |
| 3.3.3 Performance | 18 |
| 3.3.4 Operational Problems/Risks | 19 |
| 3.4 BFBC | 19 |
| 3.4.1 Description | 19 |
| 3.4.2 State of Development | 19 |
| 3.4.3 Performance | 20 |
| 3.4.4 Operational Problems/Risks | 21 |
| 3.5 CFBC | 22 |
| 3.5.1 Description | 22 |
| 3.5.2 State of Development | 23 |
| 3.5.3 Performance | 23 |
| 3.5.4 Operational Problems/Risks | 24 |

Page

4. DESCRIPTION OF TECHNOLOGIES FOR BOILER REFIT TO COAL FIRING ..... 25

4.1 EXISTING BOILER DESIGN CONSIDERATIONS ..... 25

4.1.1 Design Range of Existing Boilers ..... 25
4.1.2 Suitability of Boilers for Coal Conversion ..... 25

4.2 RETURN TO STOKER FIRING ..... 28

4.2.1 General Discussion ..... 28
4.2.2 Risk ..... 28

4.3 BFBC ADD-ON UNIT ..... 29

4.3.1 Description ..... 29
4.3.2 State of Development ..... 29
4.3.3 Performance ..... 30
4.3.4 Boiler Design Compatibility ..... 31
4.3.5 Operational Problems/Risks ..... 32

4.4 MICRONIZED COAL FIRING ..... 32

4.4.1 Description ..... 32
4.4.2 State of Development ..... 34
4.4.3 Performance ..... 34
4.4.4 Boiler Design Compatibility ..... 35
4.4.5 Operational Problems/Risks ..... 36

4.5 SLAGGING COAL COMBUSTORS ..... 37

4.5.1 Description ..... 37
4.5.2 State of Development ..... 38
4.5.3 Performance ..... 38
4.5.4 Boiler Design Compatibility ..... 39
4.5.5 Operational Problems/Risks ..... 39

4.6 COAL SLURRY COMBUSTION ..... 40

4.6.1 Description ..... 40
4.6.2 State of Development ..... 40
4.6.3 Performance ..... 41
4.6.4 Boiler Design Compatibility ..... 41
4.6.5 Operational Problems/Risks ..... 42

4.7 COAL GASIFICATION ..... 42

4.7.1 Description ..... 44
4.7.2 State of Development ..... 44
4.7.3 Performance ..... 44
4.7.4 Boiler Design Compatibility ..... 45
4.7.5 Operational Problems/Risks ..... 46

Page

5. FLUE GAS EMISSION CONTROL TECHNOLOGIES ..... 47

5.1 LIME OR LIMESTONE SLURRY FLUE GAS SCRUBBERS ..... 47

5.1.1 Lime Spray-Dry Scrubbers ..... 47
5.1.2 Lime/Limestone Wet Scrubbers ..... 49

5.2 $NO_x$ CONTROL ..... 51

5.2.1 Staged Combustion ..... 51
5.2.2 Flue Gas Recirculation ..... 52
5.2.3 Catalytic Reduction ..... 52
5.2.4 Chemical Reduction ..... 52
5.2.5 Reburning ..... 53

5.3 PARTICULATE CONTROL ..... 53

5.3.1 Mechanical Separators ..... 53
5.3.2 Fabric Filters (Baghouses) ..... 54
5.3.3 EPs ..... 55

6. PRELIMINARY COST COMPARISON OF COAL TECHNOLOGIES ..... 56

6.1 BOILER REFIT TECHNOLOGIES ..... 57

6.2 BOILER REPLACEMENT TECHNOLOGIES ..... 59

6.2.1 Stoker-Fired and FBC Package Units ..... 59
6.2.2 Field-Erected Boilers ..... 60

7. CONCLUSIONS AND RECOMMENDATIONS ..... 62

REFERENCES ..... 64

APPENDIX — COST ALGORITHM AND COMPUTER MODEL DEVELOPMENT FOR COAL-CONVERSION PROJECT COST ESTIMATING AND ANALYSIS ..... 69

A.1 BACKGROUND FOR COST ESTIMATING ..... 69

A.2 COST-ESTIMATING ASSUMPTIONS AND APPROACH ..... 70

A.2.1 General Design Assumptions ..... 70
A.2.2 Operating and Maintenance Assumptions ..... 71
A.2.3 Development of Cost Tables ..... 72

A.3 DEVELOPMENT OF COST ALGORITHMS ..... 73

A.3.1 Capital Investment ..... 74
A.3.2 O&M Costs ..... 76

A.4 COMPUTER MODEL ..... 79

A.4.1 Input Spreadsheet ..... 80
A.4.2 Cost Spreadsheets ..... 82
A.4.3 Summary Spreadsheet ..... 97

REFERENCES ..... 98

## LIST OF FIGURES


| Figure No. | | Page |
|---|---|---|
| 1 | Schematic diagram of a typical scotch shell boiler: wet-back, three-pass design | 9 |
| 2 | Common tube patterns for packaged water-tube boilers | 11 |
| 3 | Chain-grate stoker | 12 |
| 4 | Spreader stoker, traveling-grate type | 13 |
| 5 | Underfeed stoker with single retort | 14 |
| 6 | Vibrating-grate stoker | 14 |
| 7 | Direct-firing system for pulverized coal | 17 |
| 8 | Typical layout for a bubbling FBC water-tube boiler, featuring overbed coal feeding and ash recycle | 20 |
| 9 | Illustration of a common design for an industrial CFBC boiler | 22 |
| 10 | Twin-stacked, bubbling fluidized-bed concept used by Wormser Engineering, Inc., for a packaged FBC boiler system | 30 |
| 11 | Micropulverized coal combustion system | 33 |
| 12 | Slagging coal combustor system | 37 |
| 13 | Wellman-Galusha gasifier | 43 |
| 14 | Process flow diagram for a typical lime or limestone wet scrubbing system | 48 |
| 15 | Typical spray dryer/particulate collection process flow diagram | 50 |

## LIST OF TABLES


| Table No. | | Page |
|---|---|---|
| 1 | Considerations for conversion of an existing boiler to coal firing | 26 |
| A.1 | Cost categories used to develop comparable cost estimates for coal-utilization technologies | 73 |
| A.2 | Computer program — input spreadsheet | 80 |
| A.3 | Micronized coal technology — O&M costs | 82 |
| A.4 | Micronized coal technology — capital investment | 83 |
| A.5 | Slagging combustor technology — capital investment | 83 |
| A.6 | FBC module refit technology — O&M costs | 84 |
| A.7 | FBC module refit technology — capital investment | 84 |
| A.8 | Return boiler to stoker firing — O&M costs | 85 |
| A.9 | Return boiler to stoker firing — capital investment | 85 |
| A.10 | Coal/water mixture technology — O&M costs | 86 |
| A.11 | Coal/water mixture technology — capital investment | 86 |
| A.12 | Coal/oil mixture technology — O&M costs | 87 |
| A.13 | Coal/oil mixture technology — capital investment | 87 |
| A.14 | Packaged gasifier technology — O&M costs | 88 |
| A.15 | Packaged gasifier technology — capital investment | 88 |
| A.16 | Packaged shell stoker boiler — O&M costs | 89 |
| A.17 | Packaged shell stoker boiler — capital investment | 89 |
| A.18 | Packaged FBC shell boiler — O&M costs | 90 |
| A.19 | Packaged FBC shell boiler — capital investment | 90 |
| A.20 | Field erected stoker boiler — O&M costs | 91 |
| A.21 | Field erected stoker boiler — capital investment | 91 |
| A.22 | Field erected bubbling FBC boiler — O&M costs | 92 |
| A.23 | Field erected bubbling FBC — boiler capital investment | 92 |
| A.24 | Field erected pulverized coal boiler — O&M costs | 93 |
| A.25 | Field erected pulverized coal boiler — capital investment | 93 |
| A.26 | Circulating FBC boiler — O&M costs | 94 |

Page

A.27 Circulating FBC boiler – capital investment ..... 94

A.28 Packaged oil/gas boiler – O&M costs ..... 97

A.29 Computer program results – summary spreadsheet ..... 98

## LIST OF SYMBOLS, ABBREVIATIONS, AND ACRONYMS

| | |
|---|---|
| BFBC | Bubbling fluidized-bed combustion |
| Btu | British thermal unit |
| Ca/S | Molar ratio of calcium to sulfur |
| CFBC | Circulating fluidized-bed combustion |
| CO | Carbon monoxide |
| EP | Electrostatic precipitator |
| F | Degrees Fahrenheit |
| DOE | U.S. Department of Energy |
| FBC | Fluidized-bed combustion |
| FGD | Flue gas desulfurization |
| FGR | Flue gas recirculation |
| h | Hour |
| HTHW | High-temperature hot water |
| kWh | Kilowatt-hour |
| K$ | Thousand dollars |
| lb | Pound (weight) |
| MBtu | "Mega"-Btu: one million Btu |
| NG | Natural gas |
| $NO_x$ | Nitrogen oxides (e.g., $NO_2$ and $NO_3$) |
| ORNL | Oak Ridge National Laboratory |
| O&M | Operating and maintenance |
| psig | Pounds per square inch gage pressure |
| $SO_2$ | Sulfur dioxide (often includes $SO_3$ also) |

# COAL-BURNING TECHNOLOGIES APPLICABLE TO AIR FORCE CENTRAL HEATING PLANTS

J. F. Thomas J. M. Young

ABSTRACT

Coal-based technologies that have potential use for converting Air Force heating plants from oil- or gas-firing to coal-firing were examined. Included are descriptions, attributes, expected performance, and estimates of capital investment and operating and maintenance costs for each applicable technology. The degree of commercialization and risks associated with employing each technology are briefly discussed. A computer program containing costing algorithms for the technologies is described as an Appendix.

From a cost standpoint, micronized coal firing seems to be the leading technology for refit of coal- or heavy-oil-designed boilers, when only modest $SO_2$ control is needed. Returning a stoker-designed boiler back to stoker firing may be attractive if emission regulations can be achieved. For stringent $SO_2$ regulations, fluidized-bed or slagging-combustor options appear to be appropriate.

For boiler replacement, stoker or pulverized coal firing are applicable when modest $NO_x$ control is required and $SO_2$ emissions can be met with low-sulfur coal. Fluidized-bed technologies are generally favored when $SO_2$ and $NO_x$ emission regulations are strict. A circulating fluidized-bed system is the most capital intensive of these technologies, but it can meet stringent environmental standards and utilize low-grade fuels.

---

## 1. INTRODUCTION

Oak Ridge National Laboratory is supporting the Air Force Coal Utilization Program by providing the Air Force Engineering Services Center with a defensible plan to meet the provisions of the Defense Appropriations Act (PL 99-190 Section 8110). This Act directs the Air Force to implement the rehabilitation and conversion of Air Force central heating plants (steam or hot water) to coal firing, where a cost benefit can be realized.

This report examines the coal-based technologies that have the potential to be used for converting Air Force heating plants from oil/gas firing to coal firing. Only technologies that could be implemented in the short term (by 1994) are considered. This includes only technologies that are commercialized or at least demonstrated to some extent.

This report describes the applicable coal utilization technologies, examines their attributes and expected performance, and gives estimates of capital investment and operating and maintenance (O&M) costs. The degree of commercialization and risks associated with employing each technology are also briefly discussed.

Considerable effort has gone into developing costs for a number of specific technologies. Conclusions are presented concerning the relative costs and economic viability of the technologies considered. A description of a computer program that contains costing algorithms for various technologies is included in the Appendix.

It must be realized that much of the information presented concerning new and developing coal technologies will be superseded as more experience is gained. Also the reported information represents the authors' best understanding of the technology's applicability, performance, and costs. It is likely that the suppliers of these technologies would give a somewhat different view of their product.

The overall purpose of this report is to present information concerning coal-based technologies that may be applicable to Air Force central heating (steam or hot water) plants. This information includes a brief description of each applicable technology, technical strengths and weaknesses, proven performance characteristics and capabilities, state of development, and generic costs (capital investment and operation and maintenance).

Information presented here can be used to estimate the applicability, costs, and to a small extent the risks of possible coal-based conversion projects. It is intended that this information will be used to match the most optimum technologies to specific heating plants. Areas where development work could most benefit the Air Force might also be identified from this information.

# 2. SUMMARY

This report examines the coal-based technologies that have the potential for use in converting Air Force heating plants from oil/gas firing to coal firing. Technologies have been examined to define the characteristics, applications, and costs for each type of system. For most of the newer coal-firing technologies, proven information is lacking, and claims have yet to be well demonstrated in the field. Information gaps and uncertainties are pointed out in this report.

Only technologies that could conceivably be well proven and fully commercialized in the short term (by 1994) have been considered. Therefore, only technologies that are already commercially available or at least demonstrated to some extent are included.

A major decision that must be made when considering a conversion from oil/gas to coal firing is whether to replace the existing boilers or to modify them for coal burning. A number of proven coal-fired boiler technologies are available for boiler replacement, but techniques and equipment for modifying existing oil-/gas-burning boilers generally involve relatively new technologies. The technologies found to be potentially suitable for Air Force heating plant applications are identified and briefly described in Sects. 2.2 and 2.3. Some background is also given in Sect. 2.1 concerning the general characteristics of the central heating plants being considered for coal-conversion projects.

## 2.1 CHARACTERISTICS OF AIR FORCE HEATING PLANTS

The overall heating capacity and heating load at most gas- and oil-fired Air Force central heating plants tend to be rather small for coal-burning applications. Only the larger heat plants can be considered to have potential for coal utilization with an economic benefit. The size range considered for coal-conversion projects would usually be ~30 to 500 MBtu/h heat output, although larger cogeneration projects may be considered.

Air Force central heating plants contain a variety of designs of gas-, oil-, and coal-fired boilers. Nearly all boilers to be considered for conversion to coal firing or replacement with coal units are

in the size range of 30 to 100 MBtu/h output, and most generate low-pressure steam (200 psig or less) or high-temperature hot water (HTHW) (400°F). A significant number of these boilers previously burned coal but subsequently were converted to oil or gas burning. Other units were designed for specific grades of oil, ranging from residual oil (No. 6) to distillate oil (No. 2).

Some broad generalizations can be made pertaining to the size range and other characteristics of existing Air Force heat plant equipment, but each installation has important unique characteristics that will affect the potential for coal use at that site. Some examples are environmental requirements, boiler design, steam or hot water temperature and pressure, accessibility to reasonably priced coal, equipment space availability, and aesthetics requirements. These site-specific factors will also determine what coal technologies, if any, are applicable to a given heating plant conversion project.

## 2.2 REPLACEMENT BOILERS

Currently available coal-fired boilers can generally be categorized by coal-firing method such as stoker firing, pulverized coal firing, bubbling fluidized-bed combustion (BFBC), and circulating fluidized-bed combustion (CFBC). There is considerable variation in design within each of these categories. Stoker and pulverized coal firing are both well established technologies that have been employed for a long time. Both BFBC and CFBC boiler systems were developed in the 1970s, and certain designs are now fully commercialized. All four of these technology types have a somewhat different range of application.

Stoker boilers require the least capital investment and are commonly used for smaller heating systems. Pulverized coal firing is more capital intensive and most often used for systems larger than those required for Air Force applications. Environmental standards may require flue gas treatment to reduce sulfur dioxide ($SO_2$) and/or nitrogen oxide ($NO_x$) emissions for either of these technologies. If flue gas desulfurization (FGD) scrubber systems are required, the added expense will usually cause stoker or pulverized coal firing to become uncompetitive.

Fluidized-bed combustion (FBC) technologies feature superior $NO_x$ and $SO_2$ control and can handle relatively large variations in fuel. Low combustion temperatures help to minimize $NO_x$ emissions, and limestone addition can control $SO_2$. Generally FBC is used when environmental standards would require stoker or pulverized-coal firing to employ FGD systems. Circulating FBC is the most capital intensive technology but can achieve superior emission control and fuel flexibility even when compared to BFBC. Because FBC systems can handle a larger range of coal properties than stoker or pulverized firing, the chances of utilizing an inexpensive grade of coal are increased.

## 2.3 REFIT TO COAL BURNING

The feasibility of refitting existing oil- and gas-fired boilers at Air Force central heating plants depends heavily on the particular boiler design. Only a few such boiler conversions have been attempted in the past. Because of this lack of experience, the suitability of gas and oil boilers for conversion to coal is not well understood. Most of the problems stem from oil and gas boilers having small furnace volume, closely spaced steam tubes, undesirably positioned heat transfer surfaces for coal firing, and no provision for ash removal. Boilers originally designed for coal should be technically suitable for modification back to some type of coal burning.

A number of promising coal combustion technologies that could be applied to existing boiler systems were investigated. Most of these are relatively new technologies that are not yet fully commercialized. The following systems were found to be technically suitable for conversion of at least some types of existing Air Force oil-/gas-fired boilers:

1. micronized coal-firing systems,
2. slagging pulverized coal combustors,
3. modular FBC systems (add-on to boiler),
4. returning to stoker firing,
5. coal slurry firing systems, and
6. fixed-bed, low-heating-value gasifiers.

Under certain situations, each refit technology considered could be technically applicable to some Air Force central heating plants. A short summary of the findings of each technology follows.

Micronized coal firing

For this technology, coal is pulverized to a smaller grind than standard pulverized coal. The result is a smaller flame and less ash deposition problems. The very fine ash particles produced are reportedly carried through the boiler to a baghouse collector and will not cause erosion. This technology is currently being used on a few boiler systems, including some designed for residual oil burning. It appears that this technology is less costly than other refit technologies and therefore is a promising system.

Some key information that is only partially documented is (1) the effect micronized coal combustion has on the boiler tubes and other internal components due to erosion and ash settling and (2) the amount of $NO_x$ and $SO_2$ control possible. One vendor claims success in these areas. In the near future, more information from recent boiler conversions and other testing programs should clarify the capabilities of this technology.

Slagging pulverized coal combustors

In this type of system, pulverized coal is burned in a highly swirling, intense cyclone-type burner that collects the slag (molten ash) on the combustor walls. This molten ash is subsequently drained away. About 70 to 90% of the ash in the coal is removed as slag, resulting in less ash entering the boiler. Much of the coal has been burned or gasified before the flame enters the boiler. As with micronized coal, lack of experience with this technology leaves many unanswered questions. One vendor offers slagging combustors for sale at this time.

Modular FBC systems

A type of modular FBC unit is available that can be used on the "front end" of an existing boiler. The FBC unit generates about 60% of

the steam, and the existing boiler becomes a heat recovery unit. This system looks promising when $NO_x$ and $SO_2$ must be reduced to relatively low levels. Only one vendor is known to offer such a system for sale. To date at least one such modular FBC system has been used to repower an existing boiler, and several virtually identical FBC systems are in operation that have heat recovery units supplied by the vendor.

Returning to stoker firing

Many existing Air Force boilers were originally built for stoker firing but were then modified to burn oil and gas. In most cases these units can be returned to stoker firing without major technical difficulties. Such a project should be a "low technical risk" project assuming it is done according to original specifications or is carefully engineered. In some cases stoker firing would no longer meet air quality regulations.

Coal slurry firing systems

Coal slurry technologies that could be applied to boiler refit include coal/oil, coal/water, coal/oil/water, and highly cleaned coal/water slurry fuels. A major advantage of using a slurry is that the relatively expensive solid-coal-handling system is replaced by a liquid flow system. This saves space and lowers capital investment. The coal slurry refit option was estimated to have the lowest capital investment requirements of any option. However, at this time coal slurries are relatively expensive and are only available by special contract. Coal slurries may become economically competitive if oil and gas prices rise significantly, creating a large demand for such fuels.

Air-blown coal gasifiers

Coal can be gasified, and the resultant hot gas may then be fired in existing boilers. A low-heating-value gas is produced when air is used for gasification. Although there are some technical advantages to this option, the end result includes lowering of the boiler capacity and relatively low overall thermal efficiency. This technology was found to have poor economic potential for application to small boiler systems.

Gasification using oxygen is feasible and would result in producing a better quality gas. However, the cost of an oxygen plant with the gasifier is prohibitive for the size of systems considered here.

## 2.4 RECOMMENDATIONS

Because of the varied nature of possible coal-conversion projects, all technologies discussed have some potential to be the best option in a given situation. The replacement boiler technologies considered are commercially available and generally well established in the market place. The boiler refit technologies (with the exception of "return to stoker") are generally newly commercialized or "emerging." Careful evaluation of costs and risks are essential before proceeding with any coal utilization project, especially when coal refit technologies are involved.

# 3. DESCRIPTION OF REPLACEMENT OR EXPANSION TECHNOLOGIES

Coal-fired boiler systems are offered in a large variety of designs and variations. Because this topic is very broad, it will not be covered thoroughly in this report. Descriptions of typical industrial boilers and coal-firing systems are presented in this section. Most systems described here are designed for common bituminous and subbituminous coal, although special versions of certain technologies can handle lignite, anthracite, and other difficult grades of coal.

## 3.1 BOILER DESIGN

The large number of boiler designs makes it impractical to discuss all major design options in this report, but general design categories are described here. Note that the term "boiler" will be used in this report to refer to either steam or hot water generators.

### 3.1.1 Shell (Fire-Tube) Boilers

The shell boiler design is based on construction of a (usually horizontal) cylindrical pressure vessel containing the water and steam. For oil- and/or gas-burning designs, the furnace is usually a smaller cylinder with the burner at one end. An illustration of a shell boiler, which depicts a three-pass design, is shown in Fig. 1, but two-pass

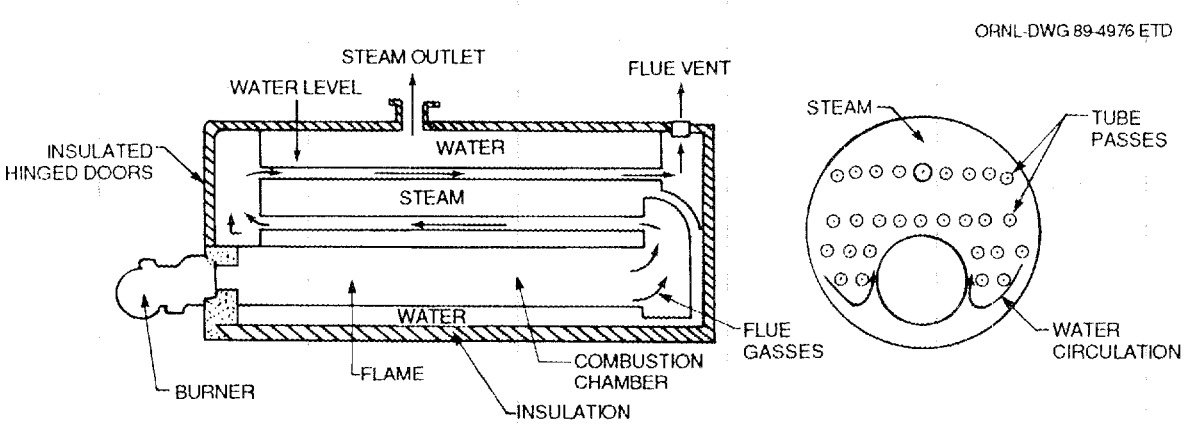


Fig. 1. Schematic diagram of a typical scotch shell boiler: wet-back, three-pass design.

units with a concentrically located burner cylinder are also common.[1,2] Flue gases travel to the far end and are then routed through tubes (known as fire-tubes) that pass through the water chamber. The gases may pass through the water vessel several times (two or three is common) before being exhausted. Heat is transferred through the metal walls of the furnace and tubes into the water, while steam collects at the top of the pressure vessel.

Because of design limitations of the large cylindrical drum that must contain the pressure,[1,2] the steam pressure rating is normally 300 psig or less for this type of boiler. These boilers are factory built with steam or hot water outputs up to ~50 MBtu/h (which is the largest size that can be rail shipped), although 5 to 20 MBtu/h is the common size range in the United States. The major advantage of this design is low-cost fabrication.

This type of boiler design has been used to a limited extent for coal firing. The coal-burning stoker furnace or FBC chamber is usually built below the cylindrical water/steam vessel.[2,3] The furnace outlet is tied directly to a cylindrical tube that runs through the water vessel. The flue gases pass through the boiler in a manner very similar to gas/oil shell boilers.

### 3.1.2 Water-Tube Boilers

Most boiler designs use pressurized-water tubes exposed to the furnace radiant heat and combustion gases to produce steam or hot water. This tubing can be designed and arranged for high-pressure steam and to produce superheating (heating beyond the saturation point). Tubes that contain boiling water will tie into an upper steam drum that separates saturated steam from the liquid water. A large variety of water-tube boiler designs and configurations are available.[1,4,5] Several common tubing patterns used for small boilers are shown in Fig. 2.

Water-tube boilers span a large range of sizes, from small commercial steam installations to the largest utility electrical power plant. For coal-burning designs, boilers will usually be factory built up to about 50 MBtu/h steam output. Larger sizes are fabricated in sections that are assembled on site (often referred to as field-erected units).

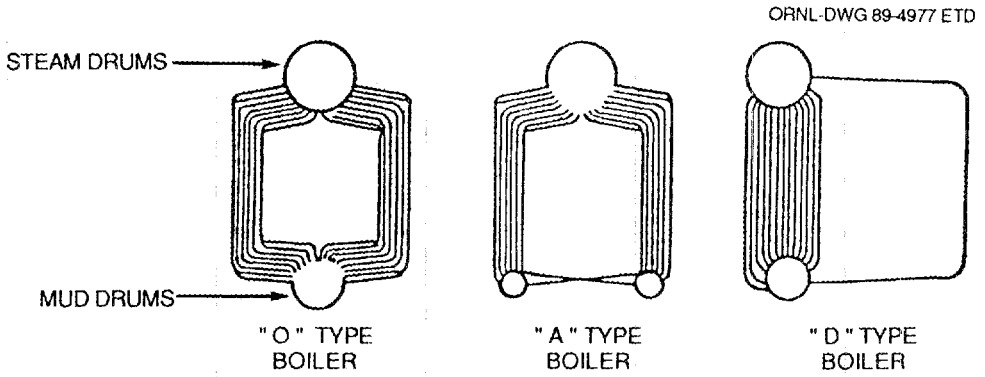


Fig. 2. Common tube patterns for packaged water-tube boilers.

### 3.1.3 Packaged vs Field-Erected Construction

Boilers are typically built entirely in the factory and shipped for on-site installation if the overall boiler system size permits. Such boilers are often referred to as "packaged units." Construction and testing at the factory will generally reduce the cost considerably relative to field erecting a boiler.

Coal-fired boilers can be packaged in capacities up to 50 MBtu/h thermal output. Oil and gas units can be built in a more compact fashion and are factory-built in sizes up to about 150 to 200 MBtu/h. The specific maximum size depends on the methods of shipping available and site-specific considerations. The size limitations cited here are based on rail shipment.

## 3.2 STOKER FIRING

A brief examination of stoker firing is given here. Many designs of stoker firing systems are available and not all are included in the description that follows. Stoker firing of coal has been commercialized for a long time and is the oldest method of coal firing other than hand firing.

### 3.2.1 Description

Stoker firing refers to a class of coal combustion methods that involve burning a "mass" or layer of coal on some sort of supporting

grate. Normally, the majority of the combustion air is introduced from below, causing the air to filter upward through the grate and coal layer while the burning "front" travels slowly downward through the coal. Several categories of stoker combustion are described below.

Chain grates and traveling grates. Chain grate and traveling grate stoker firing involve a moving grate mechanism, which is a type of continuous belt that moves slowly through the length of the furnace box. Illustrations of chain grate firing are given in Figs. 3 and 4.[6] The layer of coal is deposited on the grate at one end, begins to burn when exposed to the furnace heat, and is slowly carried through the furnace. If the stoker system is working properly, combustion will be complete by the time the coal reaches the far end. The grate dumps the ash into a pit at the return end.

The coal layer thickness is controlled by a gate or some type of mechanical feeding device. Combustion is controlled by the coal layer thickness, moving grate speed, and air supply control.

Spreader stokers. A spreader stoker refers to a coal distribution (feeder) system that throws the coal onto the stoker grate. Some coal burns in suspension before landing on the grate, but most burns on the

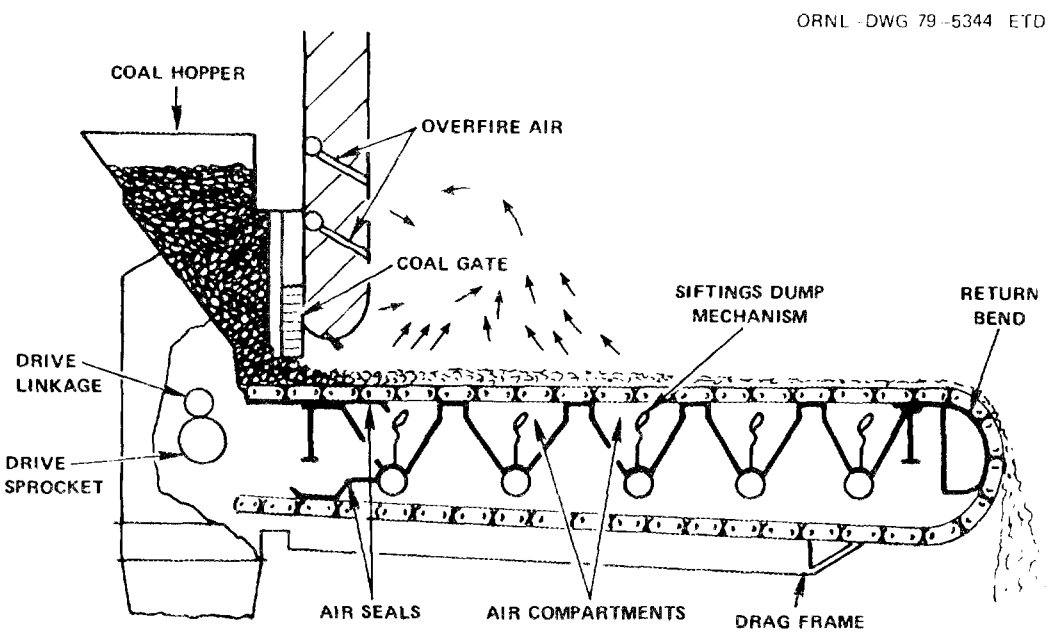


Fig. 3. Chain-grate stoker.

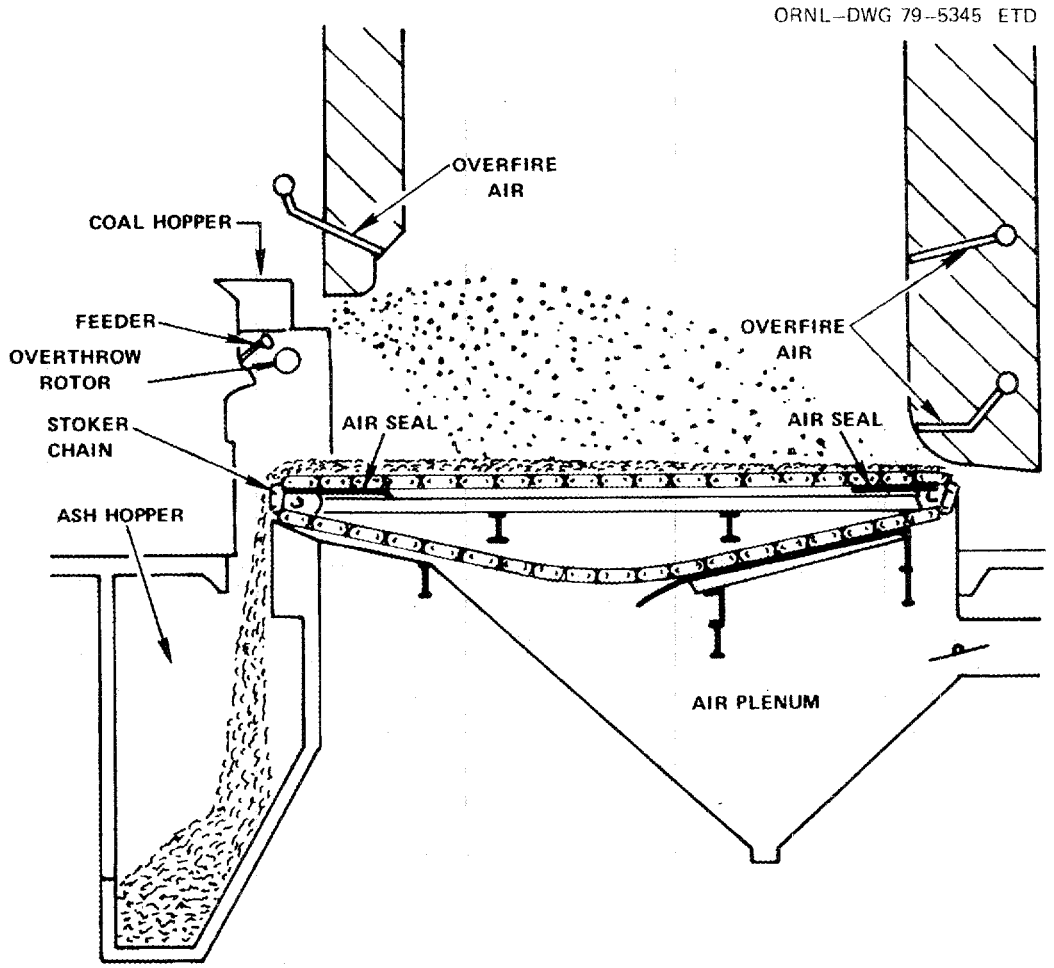


Fig. 4. Spreader stoker, traveling-grate type.

grate. This type of feeding is normally used with a traveling or vibrating grate system. A spreader coal feeder used with a traveling grate is shown in Fig. 4.

Underfeed stokers. An underfeed stoker is a stationary grate combustion system with a pushing mechanism that forces coal into a channel and then upward through the channel onto the grate. This pushing action moves the fresh coal across the furnace grate and causes the ash to drop off the grate perimeter. An underfeed stoker system (Fig. 5) is used mainly for small boilers.[6,7]

Vibrating grate stoker. The vibrating grate design involves an inclined flexible grate that shakes to move the coal (Fig. 6). Coal is fed at the high end of the grate (by a coal spreader or some other type

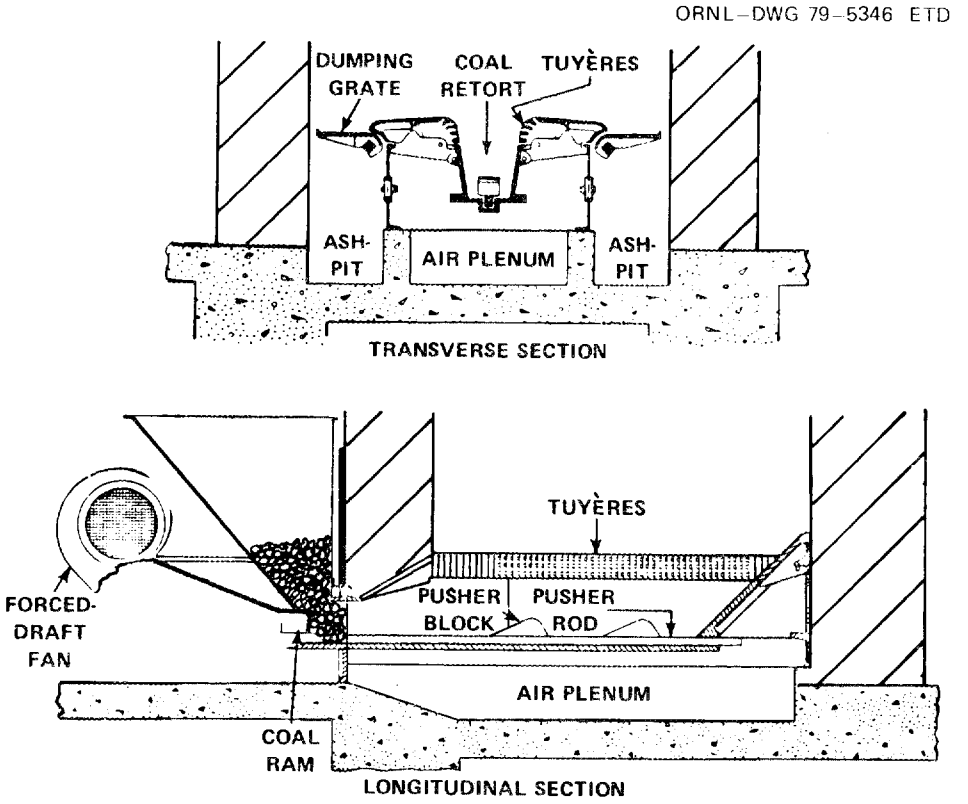


Fig. 5. Underfeed stoker with single retort.

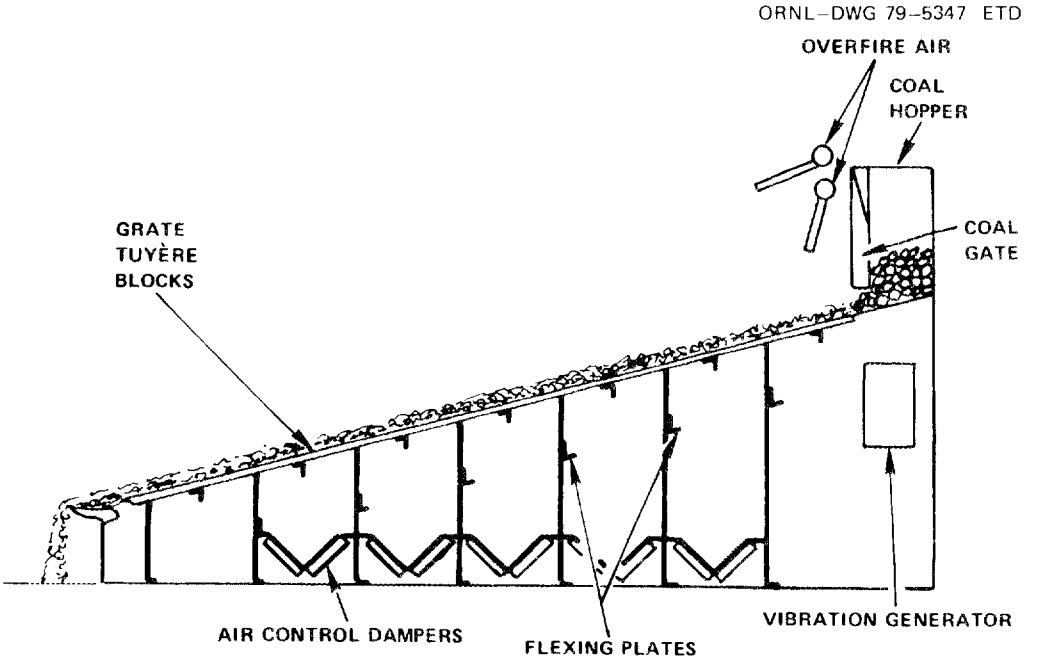


Fig. 6. Vibrating-grate stoker.

of feeder), and the motion causes it to migrate to the lower end where the ash pit is located.

### 3.2.2 State of Development

Stoker firing is fully commercialized and is the oldest technology for coal firing other than hand firing. Numerous companies in the United States and other countries market standard stoker boiler designs. Stoker firing is currently used for packaged shell boilers, packaged water-tube boilers, and field-erected water-tube units.

### 3.2.3 Performance

Fuel. Stoker systems burn coals that are double-screened, which means the small (fines) and large pieces are removed. Obviously, the oversized pieces can be broken and used, but the fines may be unusable. In actual practice, stokers can tolerate a certain amount of fine particles; the amount depends on the stoker design and coal properties. Coal fines can block air flow through the coal layer and may cause other problems that interfere with proper combustion. Stoker-grade coals cost more than "run of mine" (unsized coal) because of the sizing requirement and because the supplier must either find a use for the excess fines or dispose of them.

Stoker designs may also be sensitive to the swelling, caking, and ash-softening properties of the coal. Because air must pass through the layer of coal in a relatively even manner, problems can occur if the coal produces a solid mass from caking or forming a clinker (large solid mass or crust layer). Stoker coals must meet specifications to avoid such problems.

Combustion and boiler efficiency. The efficiency of stoker boilers depends on the type of firing system, amount of excess air, coal properties, and the heat recovery equipment to be used. Combustion efficiency will range from 94% to 98+% with properly designed, maintained, and operated equipment. The highest combustion efficiency is obtained by spreader stoker firing with reinjection of fly ash into the furnace. Average boiler efficiency can vary from about 70 to 85%, but most units

applicable to Air Force steam plants would be in the 75 to 80% range assuming proper operation.

The boiler efficiencies for stoker units are a little lower than pulverized coal boilers or oil/gas units because more unburned carbon passes through to the ash, and greater excess air is used for stoker firing. A properly operated and maintained stoker boiler will use 30 to 50% excess air.

Air pollution control. Stack emission control is a weakness of stoker firing. A stoker boiler can only control $NO_x$ emissions to an extent by carefully controlling the primary and secondary combustion air distribution. Generally, a stoker boiler will produce more $NO_x$ than other coal combustion technologies. FGD scrubbing technology is the only proven method for $SO_2$ control.

Stoker boilers generally use a baghouse or electrostatic precipitator (EP) to control particulate emissions. Such techniques are well proven and widely used. A cyclone or other type of inertial separator may precede the baghouse or EP.

### 3.2.4 Operational Problems/Risks

Stoker boilers are an old and proven technology. A properly designed and maintained boiler burning a fuel within proper specifications can give fairly good availability (90% or better). Problems can occur if a coal with improper specifications is used or the boiler is not correctly operated and maintained.

Stokers are generally designed for a relatively narrow range of coal properties. Coal properties that can affect stoker operation include the swelling index, caking and ash-softening characteristics, total ash content, and volatiles content. Examination of coal before use is recommended to ensure required specifications are met.

It is also important that the coal is distributed properly on the grate and that the amount of excess air be controlled. Lack of control over the coal distribution and air can lead to grate overheating and subsequent damage in addition to incomplete combustion and other problems.

Like all coal-burning technologies, coal and ash handling can be troublesome. Wet coal and ash may be particularly difficult to handle. Again, properly designed, maintained, and operated solids-handling systems can give quite adequate reliability.

## 3.3 PULVERIZED COAL FIRING

### 3.3.1 Description

Pulverized coal-firing systems use coal crushed to a dry powder (standard pulverized coal has a size range such that 70 to 80% will pass through 200-mesh screen) that is conveyed pneumatically to furnace burners. This type of technology has been fully commercialized for several decades. Pulverized firing is most often used for large boilers; only a small number have been built with output capacities of 100,000 MBtu/h or less. A typical direct-fired pulverized coal system is shown in Fig. 7.

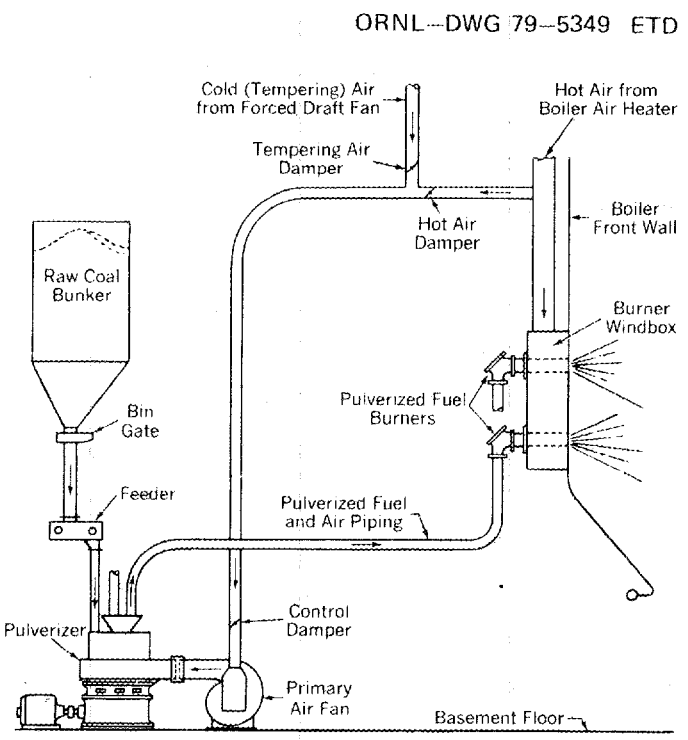


Fig. 7. Direct-firing system for pulverized coal.

### 3.3.2 State of Development

Pulverized coal technology is a well-established and accepted technology. A large number of pulverizer and firing system designs are on the market that have a long proven "track record." The vast majority of power generated from coal combustion comes from pulverized coal firing. Pulverized coal firing is currently only used with field-erected water-tube boilers.

### 3.3.3 Performance

Combustion and boiler efficiency. Pulverized coal firing typically results in combustion efficiencies greater than 99%. Boiler efficiencies for well maintained and operated units would be expected to range from 80 to 86%. These values depend largely on the heat transfer equipment. Usually, low excess air (15 to 20%) is used for pulverized coal (compared to stoker firing), which contributes to higher efficiency.

Air pollution control. Levels of $NO_x$ can be controlled by careful distribution of combustion air (sometimes referred to as "staged combustion") to limit flame temperatures and oxygen levels. In many cases $NO_x$ regulations can be met with such controlled combustion.

Pulverized coal firing has no proven method of $SO_2$ control other than FGD scrubbing technology. Less expensive techniques for controlling $SO_2$ emissions are currently the subject of much research and development work.

Fuel. Pulverized coal firing systems are generally not as restricted by coal properties as stoker systems. However, performance still depends heavily on coal quality. Coal grindability will determine the power required for pulverization and the maximum throughput for a given pulverizer. Ash content and ash-softening temperature are also of concern. Slagging problems will occur if molten or sticky ash particles contact boiler internal surfaces, and high fly ash loading may cause erosion and blockages. Coals with low ash-softening points may be unsuitable or require specially designed boilers.

### 3.3.4 Operational Problems/Risks

Although pulverized coal firing is a well-proven technology, proper design and maintenance are essential for high equipment availability and to avoid excessive repairs. A key part of the facility is the coal-handling train and especially the pulverizer system.

Pulverized coal firing is less sensitive to certain coal characteristics than stoker firing, but the furnace-boiler system and coal-handling and pulverizing system must be designed for a specific range of coal properties. Inappropriate fuels can cause a variety of operating and maintenance problems.

## 3.4 BFBC

### 3.4.1 Description

BFBC features a combustion zone that consists of a hovering mass of particles suspended by air introduced from below. This hovering mass or "bed" is composed mainly of inert matter such as sand or coal mineral matter, with coal being only a small fraction of the total mass. One major attraction of this combustion technique is low-combustion-zone temperatures that limit $NO_x$ emissions. Also, limestone can be fed into the bed to react with and remove the $SO_2$ that is formed. Therefore, flue gas emission control is the major attraction of FBC. A water-tube BFBC boiler is shown in Fig. 8.

### 3.4.2 State of Development

BFBC of coal has only become commonplace in the 1980s. Although it is a fully commercialized technology, only a few boiler companies have significant experience building successful units. Many boilers of this type have only been operating for 5 years or less.[2]

A variety of designs of BFBC boilers are currently available including water-tube or shell packaged units and field-erected water-tube units. Of these, several specific designs are fairly well developed and proven commercially. The size range of BFBC boilers available includes the whole range of industrial boilers.

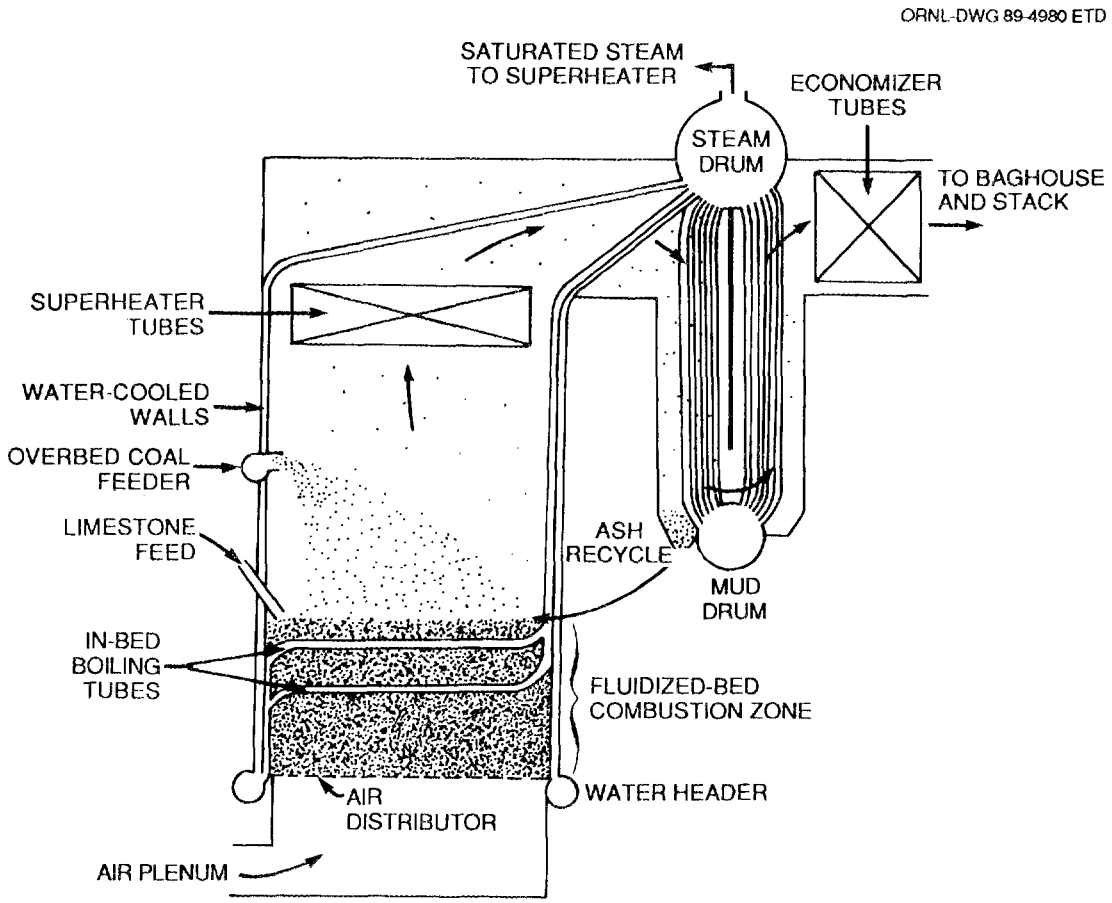


Fig. 8. Typical layout for a bubbling FBC water-tube boiler, featuring overbed coal feeding and ash recycle.

### 3.4.3 Performance

Combustion and boiler efficiency. Combustion efficiency can vary widely because of the variety of BFBC designs but is normally in the 94 to 99% range for bituminous coal firing and when fly ash is recycled to the bed.[2] Boiler efficiency is usually 75 to 80%, little different from stoker firing.

Air pollution control. Fluidized-bed designs are capable of limiting $NO_x$ and $SO_2$ emissions to a level adequate to meet most environmental regulations. The amount of limestone added to the bed can be varied to achieve the necessary $SO_2$ removal. Removing 90% of the $SO_2$ produced requires adding enough limestone so that the calcium-to-sulfur molar

ratio (Ca/S) is 2.8–5.0, depending on the specific FBC design.[2] A value of Ca/S near 3 is expected for properly designed BFBC systems. $NO_x$ control stems from low combustion-bed temperatures (near 1600°F) and secondary air control but is not as "adjustable" as $SO_2$ control. Expected $NO_x$ emissions are ~0.28 to 0.60 lb/MBtu for units without staged combustion and 0.17 to 0.30 lb/MBtu for units employing staged combustion.[2] Emissions of $NO_x$ will depend partially on the amount of nitrogen present in the fuel.

Fluidized-bed boilers generally use baghouses to remove particulates from the stack gases. Particulate removal is very similar to that for stoker or pulverized firing. Few special problems would be anticipated for FBC baghouse units.

Fuel. Bubbling beds require coal with a maximum top size ranging from 0.4 to 1.0 in.[8,9] Some designs can tolerate relatively high levels of fines, while others require double-screened coal (usually those not employing fly ash recycle to the bed). Acceptable coal properties are usually fairly broad, with little or no restrictions concerning low ash-softening temperatures, caking, and swelling. Beyond this, the range of acceptable fuels can vary considerably with the design of the individual FBC unit.[8,9]

Generally, there is a greater chance to shop for inexpensive fuels than with stoker or pulverized coal firing. However, the notion that a fluidized bed can "burn almost anything" is false. Most units are designed for bituminous coals and cannot simply switch to lignite, subbituminous, or anthracite coals. Many BFBC units can also fire oil or gas if such an option is incorporated into the design.

### 3.4.4 Operational Problems/Risks

Because there is less experience with BFBC systems, there might be more risks when employing such a boiler. Problems have been reported, especially with the earliest BFBC installations. Difficulties have included erosion and corrosion problems, startup difficulties, poor turndown, excessive elutriation of fines (causing low combustion efficiency) and poor bed inventory control.[2,7-11] However, many successful units are currently operating. Special attention should be given to the

supplier's experience and whether a new boiler unit incorporates any unproven features. Risk should be low if the unit will burn a coal that is similar to that burned in other successful units of the same design.[2]

## 3.5 CFBC

### 3.5.1 Description

CFBC has some similarity to BFBC, but the air velocity is higher, causing many of the particles to become entrained by the gas stream. A CFBC boiler system is shown in Fig. 9. The combustor is a very tall structure that allows the particles to rise to the top and then enter a cyclone (or some other inertial separator). This cyclone removes the larger particles from the combustion gases and some or all are reinjected into the combustor. A CFBC unit is basically a recycle reactor.

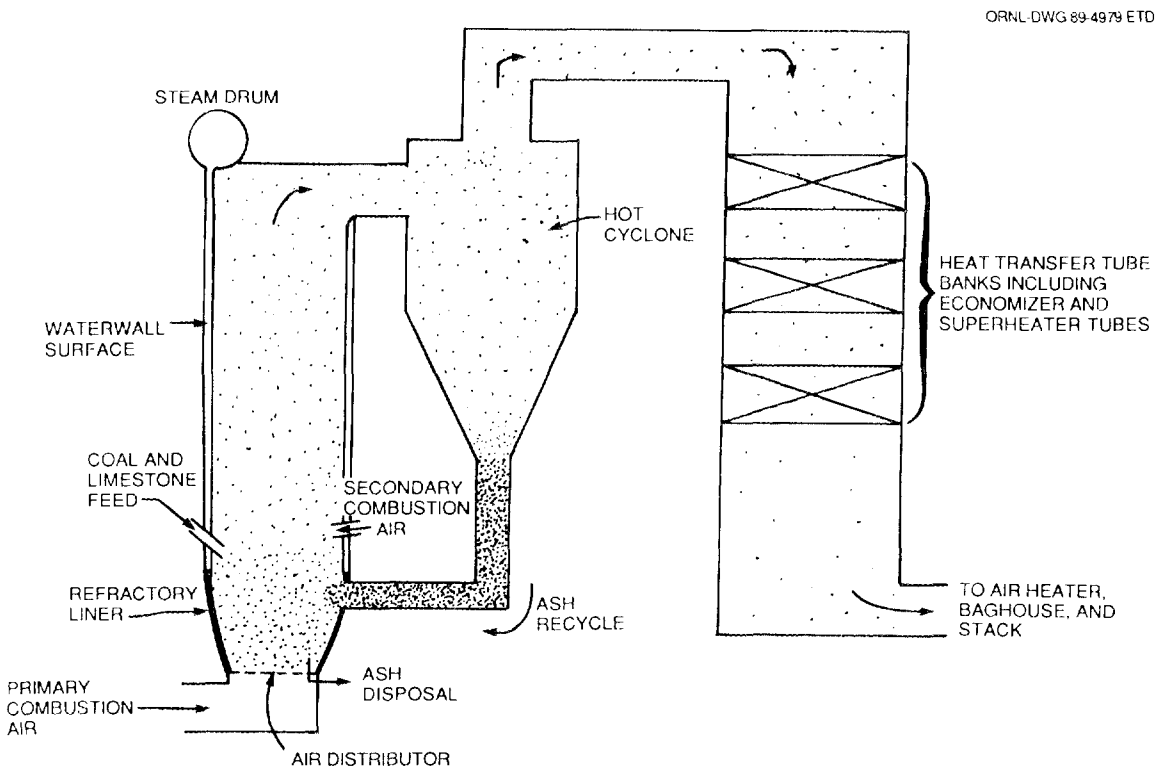


Fig. 9. Illustration of a common design for an industrial CFBC boiler.

The CFBC boiler is the most capital-intensive type of boiler design.[2,7,12-15] The advantages are superior pollution control, good combustion efficiency, fairly broad fuel flexibility, and overall good performance.[2,7-9,12-17]

### 3.5.2 State of Development

Only a few CFBC boilers were installed in the early 1980s, but that number began increasing sharply starting in 1985.[2] By the end of 1987 there were ~40 units worldwide (about half in the United States) burning coal as the major fuel, and a relatively large number of units were being built or were on order.

CFBC technology has only been applied to field-erected water-tube boilers. The sizes of units in the United States range roughly from 85 to 1000 MBtu/h output. The capital investment required is large enough to generally eliminate applying this technology to small boilers.

### 3.5.3 Performance

Combustion and boiler efficiency. The combustion and boiler efficiencies of CFBC units are quite similar to pulverized coal firing. Documented combustion efficiencies for bituminous coals range from 97 to 99.5%,[2,16] and boiler efficiencies from 80 to 85%.

Air pollution control. A major attractive feature of CFBC units is their ability to limit $NO_x$ emissions. As in BFBC systems, combustion takes place at relatively low temperatures. Furthermore, the long and voluminous combustion zone can allow excellent control over secondary air introduction. For these reasons the CFBC systems appear to be superior to all others in limiting $NO_x$. Documented $NO_x$ emission levels of 0.10 to 0.30 lb/MBtu have been achieved for burning bituminous coals with carefully controlled combustion air distribution.[2]

Limestone can be added to the solids to react with and remove $SO_2$. The CFBC system requires less limestone to attain a given level of $SO_2$ removal compared to a BFBC system. To achieve 90% $SO_2$ removal, limestone introduction corresponding to Ca/S = 1.4 to 2.0 is required.[12-17] This performance is attributed to the good combustion zone

mixing and long residence time, which are characteristic of CFBC systems, and because smaller limestone particles may be used, which increases the reactive surface area available.

Fuel. An important potential money-saving feature of CFBC systems is relatively high tolerance to variations in fuel and the ability to utilize low-grade fuels. It is possible to burn coals that are otherwise unattractive fuels and to "shop around" for cheap coals. Most coal-burning units are also capable of utilizing other solid fuels mixed with coal such as peat, wood, and wastes. For some designs, complete switching from coal to another solid fuel or a completely different rank of coal is possible.[2,15]

### 3.5.4 Operational Problems/Risks

Although CFBC is a relatively new technology for boiler applications, the reported reliability, availability, and overall performance have been surprisingly good.[16] This is a major reason for a very large increase in the number of units currently being built or on order. Note, however, that a small number of manufacturer-suppliers have much experience with this type of system. Risks may increase significantly if the system is supplied by a less experienced company or the design is not close to successful previous units.

# 4. DESCRIPTION OF TECHNOLOGIES FOR BOILER REFIT TO COAL FIRING

The technologies described in this section can be used to incorporate existing boilers into a coal-fired system. The potential advantage of these technologies over boiler replacement stems from the cost savings realized by preserving the existing boiler, boiler house, and other associated equipment.

## 4.1 EXISTING BOILER DESIGN CONSIDERATIONS

### 4.1.1 Design Range of Existing Boilers

Air Force base central heating plants contain a wide variety of oil- and/or gas-fired boilers. Nearly all boilers to be considered for conversion to coal use are in the size range of 30 to 100 MBtu/h net heat output and generate low-pressure saturated steam (200 psig or less) or HTHW (400°F). Also, a significant number of these boilers previously burned coal and subsequently were converted to oil or gas burning.

### 4.1.2 Suitability of Boilers for Coal Conversion

The technologies to be considered in this section are only applicable to a certain range of boiler design. For example, a very compact packaged boiler designed strictly to burn natural gas will have tight tube spacing, a small furnace space, and other features that make it extremely difficult to apply any coal-burning technology for refit purposes. A coal-designed boiler, on the other hand, will be adaptable to most coal technologies.

A list of considerations for converting an existing boiler to coal firing is given in Table 1. Generally, very compact boilers designed for natural gas or distillate oil will be the most difficult to refit to a coal technology. The difficulty of refit is less for boilers designed for residual oil firing. The issue is not the design fuel, but the dimensions and features of the boiler under consideration. The suitability of boilers designed to burn gas and oil for subsequent conversion to coal firing is not well understood because of lack of

Table 1. Considerations for conversion of an existing boiler to coal firing

| | |
|---|---|
| 1. | Furnace volume and residence time |
| 2. | Flame impingement (especially on furnace back waterwall) |
| 3. | Furnace slagging |
| 4. | Tube fouling, soot blowers |
| 5. | Tube spacing: ash bridging and gas velocity effects |
| 6. | Convection section gas velocities: erosion and pressure drop |
| 7. | Heat transfer surface modifications |
| 8. | Particulate loadings: erosion |
| 9. | Metal corrosion (dependent on fuel chemistry and metal temperature) |
| 10. | Bottom ash removal: ash pit system |
| 11. | Fly ash removal: ash settling, cyclone, and baghouse additions |
| 12. | Control of $NO_x$ and $SO_2$ |
| 13. | Forced-draft and induced-draft fan air flow requirements |
| 14. | Boiler output rating reduction |

experience. Boilers originally designed for coal should be technically suitable for modification back to some type of coal burning.

Natural gas and distillate oil designs. It is common for boilers to be designed for both natural gas and distillate oil firing, although some boilers may only be designed to burn natural gas. Those designed exclusively for gas firing may have tight tube spacing, very small furnace volume, low fan power, and other characteristics that make coal utilization for such a unit very unlikely. Boilers designed for distillate oil firing (usually No. 2 oil) may have somewhat larger furnace volume and tube spacing, which may increase the possibility of coal utilization somewhat, but not nearly to the extent necessary for conventional pulverized or stoker coal firing.

The "tightest" designs are generally found in packaged gas and distillate oil boilers with output capacities in the 150- to 200-MBtu/h range.[18] These units have been carefully designed without excess space to be rail shippable and yet have large output capacities. Such units are least likely to accommodate coal firing.

Boilers designed for distillate oil and/or natural gas firing would, at best, need to be modified and probably down rated (in steam capacity) to accommodate most conceivable forms of coal firing. In many

cases the needed modifications (see Table 1) and drop in steam capacity would render such a project technically unsound and economically unattractive.[5,7,18,19] A few coal technologies that may be applicable to such boiler designs are discussed in this report, but no coal technology has been proven to be practical for such application.

Residual oil-fired boilers. Boilers designed for residual oil burning (usually No. 6 oil) are equipped with soot blowers and have a larger furnace volume and more space between convection tubes than gas or distillate oil designs. Because residual oil contains some ash (up to 0.5%), soot blowers are required to prevent excessive fouling of heat transfer surfaces. These boiler characteristics work in favor of conversion to coal firing, but such conversion may still be difficult and/or expensive. Installing conventional stoker or pulverized coal burner systems into this type of boiler is usually not feasible; other "advanced" technologies must be employed.

Coal-designed boilers. A significant number of boilers in Air Force central heating plants were designed for coal but now fire natural gas or oil. Most of these units were stoker-fired, water-tube designs that burned coal for a period of time before being modified for oil or gas burning. Although this type of boiler should be the most suitable technically for conversion back to coal, the necessary modifications and additional equipment may be costly.

This category of boiler will usually have soot blowers in place and sufficient furnace volume and tube spacing to burn some types of coal. However, a number of other items may need repair or replacement. The fans may still be sized for coal burning but often have been replaced with lower-capacity units. New fans may be required unless the boiler is to be down rated. The bottom ash pit may have been filled in, for which case replacement is required for most applicable coal-burning technologies. For almost all sites, the coal- and ash-handling equipment is in need of extensive repair or is no longer present.

It is possible that coals meeting the original design specifications are no longer readily available and only less suitable coals can be obtained economically. If this is the case, it may not be so easy to return the boiler to stoker firing or at least not the same stoker

design. Using other types of coal firing can allow coals with properties different than specified for the original stoker design to be burned. Alternate coal-firing methods may raise some additional technical questions.

## 4.2 RETURN TO STOKER FIRING

### 4.2.1 General Discussion

This technology applies to boilers built originally as coal-fired stoker systems that have subsequently been modified for oil/gas firing. There is nothing inherently difficult from a technical standpoint to return a boiler to stoker firing, although there may no longer be room for coal storage or coal- and ash-handling equipment. Such a conversion will involve refitting a stoker-firing system into the boiler, putting in ash removal and air pollution control equipment, and adding a coal-handling system. It will also be important to find coals that are compatible with the chosen stoker and existing boiler designs.

In some cases the modifications made when the stoker boiler was converted to gas/oil will be troublesome. The bottom ash pit may be filled in and covered by concrete, and most solids-handling equipment will be either gone, unusable, or in need of extensive repair. The fans and duct work may have been replaced with lower-capacity equipment that is unsuitable for stoker firing. It is also important that the soot-blowing system be in proper working order.

More information concerning stoker-fired boilers is found in Sect. 2.2.

### 4.2.2 Risk

Assuming there is adequate clearance to install a stoker into the boiler and enough room for the needed peripheral equipment, the choice is mainly a question of economics. The technical risk should be similar to installing a new stoker boiler, unless there are special problems. Examples of such problems include: (1) the stoker boiler never operated well when it was originally installed, (2) coals meeting the design specifications are no longer available, (3) the boiler is now in poor

condition, or (4) environmental regulations have become too strict for stoker firing.

## 4.3 BFBC ADD-ON UNIT

### 4.3.1 Description

It is possible to install a BFBC unit that links to the existing boiler to make a complete steam or hot water generator system. Combustion takes place in the add-on FBC unit, which also generates a portion of the steam, while the existing boiler becomes a heat recovery boiler.

At this time only one U.S. company is known to offer a packaged FBC unit that can be used as an add-on unit. Wormser Engineering, Inc., offers a design for a twin-stacked, shallow BFBC system for this purpose.[20,21] This type of system is shown schematically in Fig. 10. Coal is burned in the lower fluidized bed, which contains mainly inert particles (sand and coal ash) as the bed material. Limestone is fed into the upper fluidized bed where $SO_2$ removal takes place. Normally this system includes a heat recovery steam generator, but an existing boiler may serve this purpose.

In this refit concept, the FBC module burns the coal and generates about 60% of the steam. Flue gas at ~1500°F passes into the existing boiler and generates the remaining 40% of the steam. A hot cyclone system can be installed between the BFBC unit and the existing boiler if the particle loading must be reduced. It is also possible for the existing boiler to retain full oil-/gas-firing ability.

### 4.3.2 State of Development

Several BFBC units of this design are currently operating in the United States, one of which incorporates an existing boiler as part of the steam generation equipment.[11] The operating BFBC units of this design are fairly recent installations. The Wormser BFBC module should be considered commercialized, although information on long-term operation, maintenance, and equipment reliability is lacking.

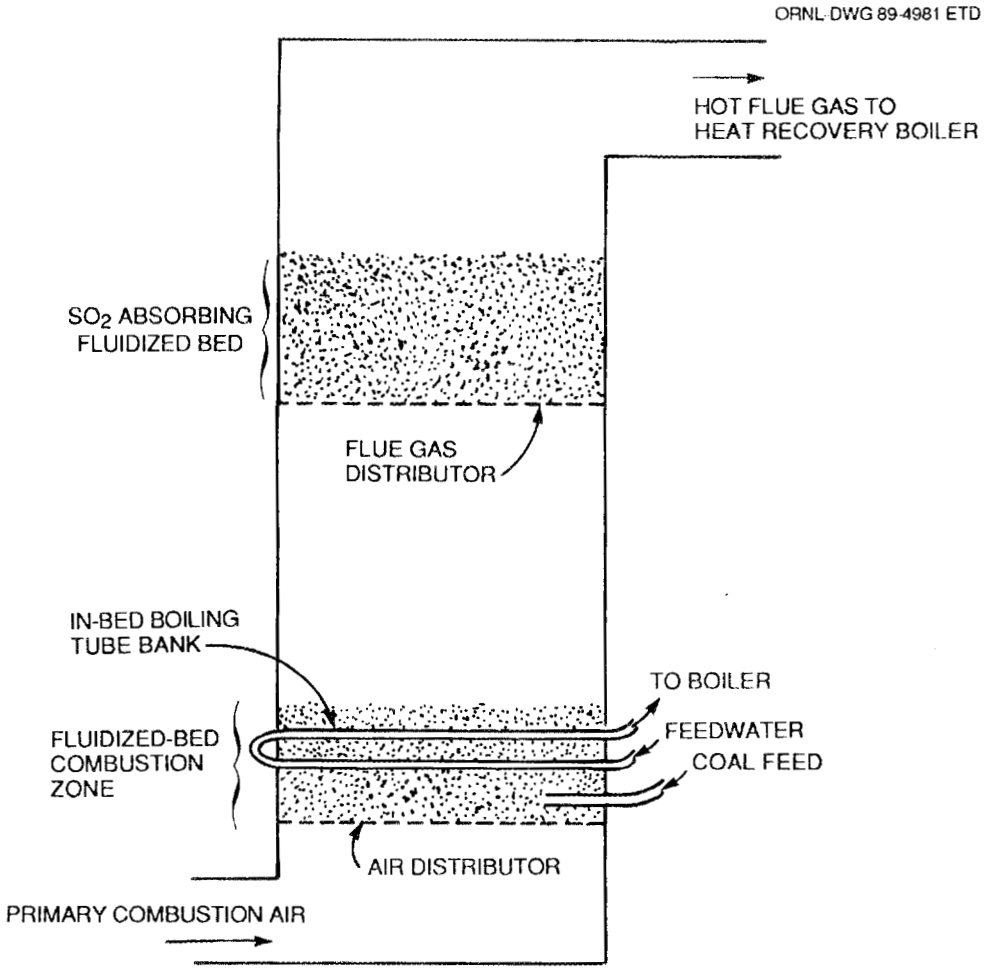


Fig. 10. Twin-stacked, bubbling fluidized-bed concept used by Wormser Engineering, Inc., for a packaged FBC boiler system.

### 4.3.3 Performance

Good performance has been reported for this type of FBC unit in regard to $SO_2$ removal (using limestone), $NO_x$ control, combustion efficiency, and load following.[20] The suppliers of this technology claim the performance is superior to other BFBC designs. Adequate data from commercial units are not available.

Combustion and boiler efficiency. Combustion efficiency of 97% or better is expected for bituminous coal. Expected boiler efficiency will vary from ~77 to 83% depending on existing boiler design and other factors.

Air pollution control. The manufacturer claims $NO_x$ levels of 0.35 lb/MBtu and $SO_2$ removal of 90% or greater using limestone (Ca/S ratio of 3/1) are achievable.[20]

Fuel. This type of combustion system should have relatively good fuel flexibility and can tolerate fines. Therefore, the user should be able to shop around for inexpensive coals with this particular design. The feed system will accept 2-in. top size coals. More information concerning BFBC boilers is given in Sect. 3.4.

### 4.3.4 Boiler Design Compatibility

It is uncertain which boiler designs, other than those capable of burning coal, are compatible with this type of system. Combustion should be essentially complete before gases reach the existing boiler, and the particle loading can be reduced by a hot cyclone if needed. These facts should broaden the spectrum of boiler designs potentially compatible with this technology. It seems likely that boilers designed for residual (No. 6) fuel oil could be compatible without extensive modifications. Distillate oil and natural-gas-designed boilers would be more technically challenging to incorporate into such a system but may be feasible.

Any boiler being refitted to use this technology will need soot blowers and probably a bottom ash-removal system, unless a hot cyclone is successfully employed. Also, careful consideration must be given to the methods of integrating the steam systems of the FBC module and the existing boiler.

The issues of boiler suitability are complicated by the fact that much of the steam is generated by the FBC unit and the existing boiler becomes merely a convective heat recovery unit. If the overall steam capacity is to remain the same after the FBC unit is installed, the existing boiler will only need to generate roughly one-half the original amount of steam. This boiler will probably need to handle slightly more flue gas, which enters at roughly 1500°F. Such conditions are quite different from the original design conditions, and although they should not harm the boiler, heat transfer performance must be examined carefully. If the existing boiler is an HTHW generator, the BFBC unit will

probably need to be designed for hot water generation rather than as a boiling system.

### 4.3.5 Operational Problems/Risks

A major drawback of this system is the lack of operating experience to prove adequate availability and reliability. Troublesome operation from one unit has been reported, but some of the problems are apparently caused by features unique to this particular unit.[11] Problems reported include wear of the feed system and ash deposition on the gas distributor nozzles for the upper bed. It would be preferable to use a design and operating conditions close to those existing units with the best operating history.

There may be technical difficulties in integrating the steam and control systems for the FBC module and the existing boiler. It is also uncertain whether use of a hot cyclone will completely eliminate the need for soot blowers and ash-removal equipment for the existing boiler. Boiler compatibility would need to be studied in detail for any specific case because there is little experience available to draw from.

Retaining the oil-/gas-firing capability in the existing boiler significantly lowers the risk of steam outage. It is also possible that the lighter duty handled by the existing boiler (lower temperatures and no combustion) could extend the boiler life.

## 4.4 MICRONIZED COAL FIRING

### 4.4.1 Description

The term "micronized coal," also known as "micropulverized coal," refers to coal that has been crushed to a size distribution significantly smaller than standard pulverized coal. Because the coal particles are very small, they are especially reactive and will burn with a relatively short flame. The resultant ash particles are reported to be small enough to carry through the boiler to a baghouse collector and presumably do not cause erosion problems.

The most commercialized system of this type is marketed by TCS-Babcock, Inc., which obtained the rights to the technology from the original developer, TAS Systems, Inc.[22] For this particular design, coal is pulverized so that 80% by weight passes through 325-mesh screen, compared to 80% passing through 200-mesh screen for standard pulverized coal. The mass-mean particle diameter is ~20 μm. Flame size is said to be comparable with a No. 4 fuel oil flame. Other micronized coal systems may have somewhat different grind sizes, but all are pulverized significantly beyond standard pulverized coal.

The TCS-Babcock, Inc., micronized coal system is depicted in Fig. 11. This system includes a coal pulverizer that utilizes particle-to-particle attrition, combustion and transport air system, a burner, and controls. Coal is first broken into 2-in. top size (if needed) and then micronized before being pneumatically conveyed to the burner. Because the coal particles are very small, they are especially reactive and burn with a short flame. The ash particles are reported to be small

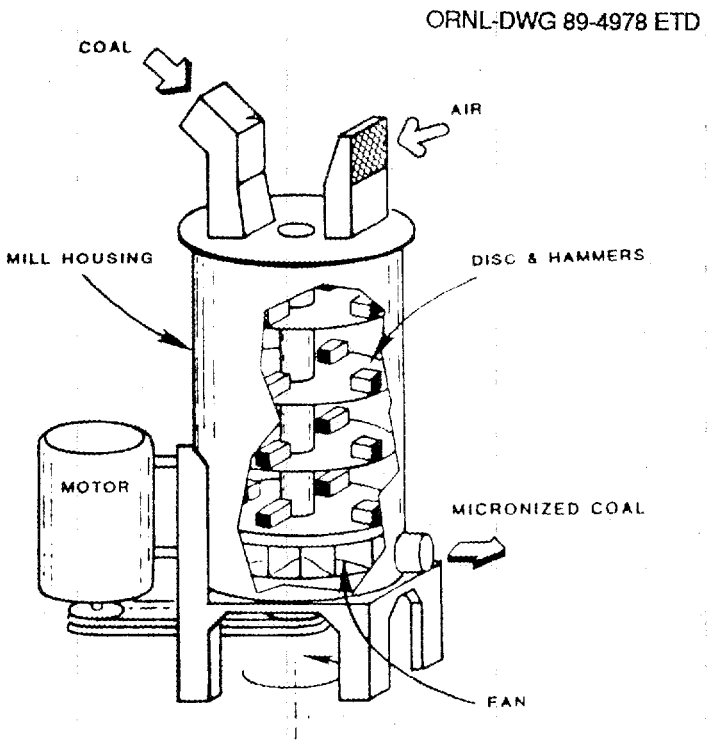


Fig. 11. Micropulverized coal combustion system.

enough to carry through the boiler to a baghouse and will not cause erosion problems. Excessive ash settling can possibly be alleviated by using properly placed pneumatic "puffer" system nozzles to re-entrain the fly ash. Soot blowers are probably needed as well.

### 4.4.2 State of Development

Although there are numerous micronized coal combustion systems currently in use (over 80 TCS, Inc., units), only about four or five industrial boiler refit applications are known.[22-25] Most of the operating units are used as industrial burners for applications such as kiln firing and cement and asphalt manufacturing. Note that very few boiler conversions to coal firing involving any technology have been reported, so this number is actually surprisingly high. Only the TCS-Babcock, Inc., system is known to have been installed to convert a packaged industrial oil-designed boiler. Microfuels, Inc., has installed several micronized coal combustion systems, most of which are being tested on utility boilers.[26,27] This is a young technology, and most installations of micropulverized combustion equipment have been fairly recent.

Several companies market various designs of micronized coal systems. These include coal micropulverizers designed as fluid-attrition mills (Microfuels, Inc., and Ergon, Inc.) or carefully controlled standard ring-roller mills[28] (Williams Patent Crusher, Inc.).

### 4.4.3 Performance

Combustion and boiler efficiency. High combustion efficiencies can be reached using this technology, as would be expected. Combustion efficiency should be 99% or higher for most coals under proper operation. Boiler efficiency will depend greatly on the existing boiler and heat transfer equipment and should have a range of 77 to 83% for well maintained and operated systems.

Air pollution control. The ability of this technology to limit $NO_x$ and $SO_2$ emissions is uncertain. It is claimed that carefully controlled primary and secondary air can keep $NO_x$ levels low enough to satisfy most standards. This appears to be technically possible, but convincing demonstrations of low $NO_x$ emissions are needed. Control of $NO_x$ with

micronized coal should be very similar to that achieved with pulverized coal.

Limestone can be micropulverized along with the coal to facilitate capture of $SO_2$ in the combustion zone. Claims have been made that significant $SO_2$ capture is possible. Sulfur-capture performance is expected to be somewhat inferior to a BFBC. Preliminary tests show that 50% capture is possible for a Ca/S of 2.0.[22] The $SO_2$ removal performance and subsequent effect on the boiler are not well documented at this time. It is likely that documented values for both $NO_x$ and $SO_2$ control will be available in the near future.

Fuel. This type of system can utilize a variety of coals (similar to pulverized coal firing, Sect. 3.3) and should give a certain amount of fuel flexibility. Cost savings may be possible through opportunities to find the low-priced coals. Ash-loading and ash-softening temperature will be of concern because of their effect on the boiler. The actual values that can be tolerated will depend on the boiler design. Coal grindability is important when it affects coal throughput and component wear-out rate for a given system.

### 4.4.4 Boiler Design Compatibility

The types of boiler compatible with this technology are unknown at this time. Coal-designed boilers should pose few difficulties. Number 6 oil-designed boilers should have adequate furnace room to prevent flame impingement, and if the ash acts according to claims, no ash blockages should occur in the convection passes.[23,24,29] Boilers designed for No. 2 oil and/or natural gas may be adaptable if the burner design can eliminate any flame impingement on the interior surfaces. Such a project may require new fans and duct work, installation of soot blowers, and down rating of the boiler steam capacity.

When applying micronized coal technology to boilers, the concerns are the potential for slagging, fouling, and ash agglomeration. Because the flame is intense, the ash is in a molten state for a short time period. As long as the ash cools and solidifies before contacting boiler surfaces and does not agglomerate to form larger particles, there should be a minimum of ash and slag problems. If ash drops out of the

gas stream and settles to the boiler bottom (because of agglomeration, low gas velocity, or other reasons) in large enough quantities, some removal method must be employed. Bottom ash might be dealt with by using an air "puffer" to re-entrain the settled particles and collect them in the baghouse.[22,24] It is believed that soot blowing of heat transfer surfaces will be needed in all cases.

More information should be available in the near future concerning the compatibility of existing boilers to this technology.[18,22] A new installation at St. Louis University Hospital started operation in the latter part of 1987. Two existing residual oil-designed packaged boilers were converted to coal. This installation should provide insight to the effects of micronized coal combustion in such a boiler. Furthermore, the companies marketing micronized coal technology are continuing with numerous tests and demonstrations of their product.

### 4.4.5 Operational Problems/Risks

Because so little operating experience is available for boiler and hot water generator applications, it is difficult to evaluate maintenance requirements and availability of such a system. Questions concerning the micronizing and combustion equipment life and the safety of this equipment must be answered. Also, the possible effects of boiler erosion, corrosion, fouling, and ash related problems must be carefully evaluated (see Sect. 4.1 and Table 1). These unanswered questions must be balanced with the apparent successes and progress reported from the St. Louis University Hospital project. Furthermore, numerous micronized coal systems are operating, and much more reported data should become available in the near future. There does not appear to be any inherent reason why availability for such a system should be much different from more conventional coal-firing systems.

The capacity of micropulverizer mill units are highly dependent on coal properties, especially the grindability index. It is important to consider how a mill's throughput will be affected by a switch in coals or from coal property variations in general.

At this time $NO_x$ and $SO_2$ control capabilities are not well proven, so it is uncertain what type of environmental regulations can be met

with this technology. It is reasonable to assume that at least modest success in controlling $NO_x$ and $SO_2$ is obtainable.

## 4.5 SLAGGING COAL COMBUSTORS

Several organizations are actively developing slagging combustors.[30-34] This technology has been targeted mostly for utility boiler systems but appears to be applicable to industrial boilers as well. The design by TRW, Inc., is claimed to already be commercialized and is currently being offered for sale.[30] The TRW slagging combustor is illustrated in Fig. 12. Several other companies are developing or demonstrating slagging combustors but have not advanced as far as the TRW design. For this reason the information given here reflects TRW's experience more than that of the other developers.

### 4.5.1 Description

A slagging combustor uses aerodynamically induced, intense high-temperature combustion of pulverized coal to cause the mineral matter in

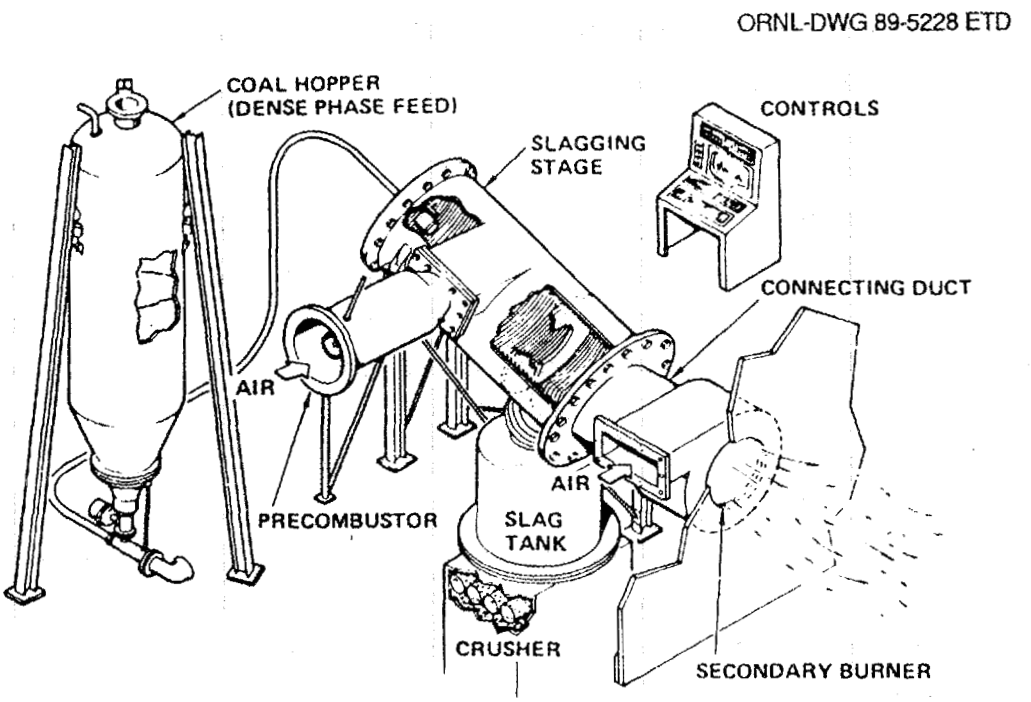


Fig. 12. Slagging coal combustor system.

coal to melt and impinge on the combustor wall. The slag layer formed on the wall flows to some sort of drain for quenching and disposal. The aim is to remove most of the ash before it enters the boiler; developers hope to achieve 70 to 95% removal. This would significantly lessen much of the potential erosion, fouling, and plugging problems that could occur.

Because the combustion is mostly completed in the slagging combustor, a relatively short flame will extend into the boiler. This would reduce flame impingement and furnace volume problems when trying to refit existing boilers. The combustion reactions within the slagging combustor would probably be kept under reducing conditions to control $NO_x$ formation. Additional air would be added after the burner exit to complete combustion and to control $NO_x$ emissions and flame shape.

### 4.5.2 State of Development

Several organizations are currently testing slagging combustors.[30-34] The design by TRW appears to be the most developed unit and is currently available for commercial application. A TRW demonstration combustor has run for several thousand hours, burning Ohio No. 6 coal to generate steam with a stoker-designed boiler. In addition, other test units are operated by TRW and other parties.

### 4.5.3 Performance

Combustion and boiler efficiency. Because of the intense combustion of pulverized coal, the combustion efficiency range should be about 98.5 to 99.8% for bituminous coals. Boiler efficiency range depends very much on the existing heat transfer equipment and would be expected to be about 77 to 83% for industrial-type boilers found at Air Force facilities (assuming proper operation and maintenance).

Air pollution control. The capabilities of a slagging combustor will vary with a number of parameters including combustor design, coal properties, size of the unit, load requirements, and existing boiler characteristics. Slag removal will probably range from 70 to 94%, with typical values of 80 to 90% for the TRW design. Ash-removal equipment, including a baghouse, will be needed in most cases. Reported $NO_x$ levels

of 0.30 to 0.59 lb/MBtu are achievable. About 70% $SO_2$ capture using limestone injected through the burner should be possible with Ca/S = 3/1.[34] These ranges are preliminary, as testing and development by several groups is continuing.

Fuel. "Run-of-mine" coals can be used for this technology, because crushing and pulverization equipment would normally be included in the coal-handling system. Slagging combustors should be suitable to a relatively large range of coals, but limitations concerning ash-melting temperatures may cause certain limitations. Low ash-softening temperatures would help collection and removal of slag in the combustor, but the carry-over may cause fouling in the boiler. There will be some opportunity to shop around for inexpensive fuels in most cases.

### 4.5.4 Boiler Design Compatibility

It appears that this technology could be applied to boilers designed for coal or residual oil. Enough ash will enter the boiler to require some soot blowing and possibly a bottom ash removal or re-entrainment system. Flame lengths should be relatively small, and no flame impingement problems would be anticipated for these boiler types.

It is theoretically possible that this technology would also be applicable to units designed for distillate oil or natural gas, but detailed study and tests would be required to document this and identify the extent of the necessary alterations. Very "tight" gas boilers would have little chance of being refit with this type of system because of ash-related problems, flame length, gas velocities, and other problems.

As with other coal refit technologies, not much is known about the long-term erosion and corrosion effects that may occur.

### 4.5.5 Operational Problems/Risks

Because slagging combustors are not yet fully commercialized (by the definition used for this report), the results of applying this technology cannot be predicted with confidence. It seems that the TRW demonstration unit has functioned fairly well, but at this point very little is known concerning availability, reliability, and maintenance

requirements. Like several of the other technologies discussed previously, the relationship between boiler design and problems such as erosion, corrosion, ash settling, fouling, and excessive gas velocity is not well known. More data concerning $NO_x$ and especially $SO_2$ control would be helpful in evaluating this technology.

## 4.6 COAL SLURRY COMBUSTION

### 4.6.1 Description

Coal slurry combustion includes a class of technologies based on a broad range of coal-water slurries, coal-oil slurries, and coal-oil-water slurries. Many slurries will have chemical additives to enhance stability or change other characteristics. The coal used may be uncleaned or highly cleaned coal with low ash and sulfur content. The grind size will also vary between standard pulverized coal and very fine micronized coal.

A major objective is to avoid solid coal-handling equipment and use liquid flow systems instead. A coal-oil slurry flow and firing system may resemble a residual oil system, although it would be somewhat more elaborate. Some slurries may be much more difficult to handle and require special pumps, wear surfaces, burners, and other components. Virtually all coal slurries are more viscous and abrasive than residual oil. Slurry burners will vary from somewhat modified residual oil burners to complex, relatively costly specialty burner designs.

### 4.6.2 State of Development

A significant amount of development, testing, and use of slurry handling and burner equipment has been done in the past or is in progress.[35] Slurry combustion is in the development and demonstration stage at this time. Because there are a variety of slurries and each has different properties, there is not much design standardization for equipment. Employing a coal slurry system at the present time would involve some technical risks and would be considered a demonstration project.

Coal slurries are marketed by a number of companies.[35-38] Presently, the manufacturing capacity is quite limited, and the price of slurry fuels is high compared with oil and gas. If there were significant demand for coal slurry fuels, the price would drop and the manufacturing sites would expand and become more widespread.

### 4.6.3 Performance

Combustion and boiler efficiency. Expected combustion efficiencies for coal slurries range from 96% to over 99%. Coal-water slurries will be somewhat more difficult to burn compared to coal-oil mixtures and will give slightly lower combustion efficiencies.

Note that losses caused by the presence of water in a slurry must be considered separately, because they are not reflected by the combustion efficiency. For example, if a slurry comprised of 70% bituminous coal and 30% water is compared to firing dry coal in a boiler, about 4% more coal must be burned in slurry form to achieve the same effective boiler output.

Air pollution control. There is some potential for pollution control when burning coal slurries. Coal-water mixtures tend to burn somewhat cooler than pulverized coal and therefore produce less $NO_x$ emissions. Also, ash, sulfur, and possibly nitrogen can be removed during the coal-cleaning step when making slurries. Apart from these advantages, coal slurries must be dealt with in a similar manner to pulverized coal to limit $NO_x$ and $SO_2$. Based on the limited experience with slurries to date, it is difficult to quantify expected pollutant levels.

Because of high flame temperatures, there can be problems controlling $NO_x$ emissions when firing coal-oil mixtures. A balance must be found between the need to keep low temperatures to limit $NO_x$ and yet have combustion reaction rates high enough to achieve good particle burnout.

### 4.6.4 Boiler Design Compatibility

As with nearly all technologies for refitting boilers to fire coal, much uncertainty surrounds the question of boiler compatibility. However, a few guidelines can be found from the experience gained to date.

Coal-water slurry firing will not be too different from pulverized coal firing, and probably only coal-designed and possibly modified residual oil-designed boilers would be applicable. Coal-oil slurries may exhibit shorter flames than coal-water slurries, but ash content and other characteristics will limit applicability to coal- and residual oil-designed boilers. It would be quite difficult to utilize distillate and natural gas boilers with compact designs, even for highly cleaned coal slurry applications. In most cases, even if it were technically possible to fire slurry fuel, the resulting output capacity down rating and boiler modifications would make this unattractive.

The obvious issues of ash deposition and removal, boiler fouling, erosion, and flame impingement must be carefully examined. Burner design, fuel characteristics, and boiler design will govern the applicability of this technology. For coal slurries other than those with very low ash content, bottom ash removal is essential. It may be possible to use air "puffers" to re-entrain bottom ash if the ash particles are very fine and therefore avoid installing an ash pit system. Soot blowing would be required for all conceivable applications. The issues are quite similar to those found with micronized coal firing, although in most cases the flame size will be significantly larger for slurry firing than dry micronized coal firing.

### 4.6.5 Operational Problems/Risks

Coal slurry refit technology is not well understood at this time. Problems concerning burner design and wear, and storage, pumping, and flow systems have been cited. Boiler compatibility is another major concern, as it is for several of the other coal refit alternatives discussed in this section. The technical risks of using a coal-oil slurry are probably slightly less than coal-water slurries, but the latter is more feasible from a cost-saving standpoint.

## 4.7 COAL GASIFICATION

From studies of relatively small gasification systems, it was concluded that the Wellman-Galusha design or similar fixed-bed, air-blown

gasifiers were the most promising for conversion of existing Air Force boilers.[39-42] An illustration of the Wellman-Galusha system is shown in Fig. 13. This type of gasifier is readily available in standard-sized packaged units; this keeps capital costs relatively low. Only air-blown gasification systems were considered because of the prohibitively high cost of an oxygen plant for systems in the relevant size range.

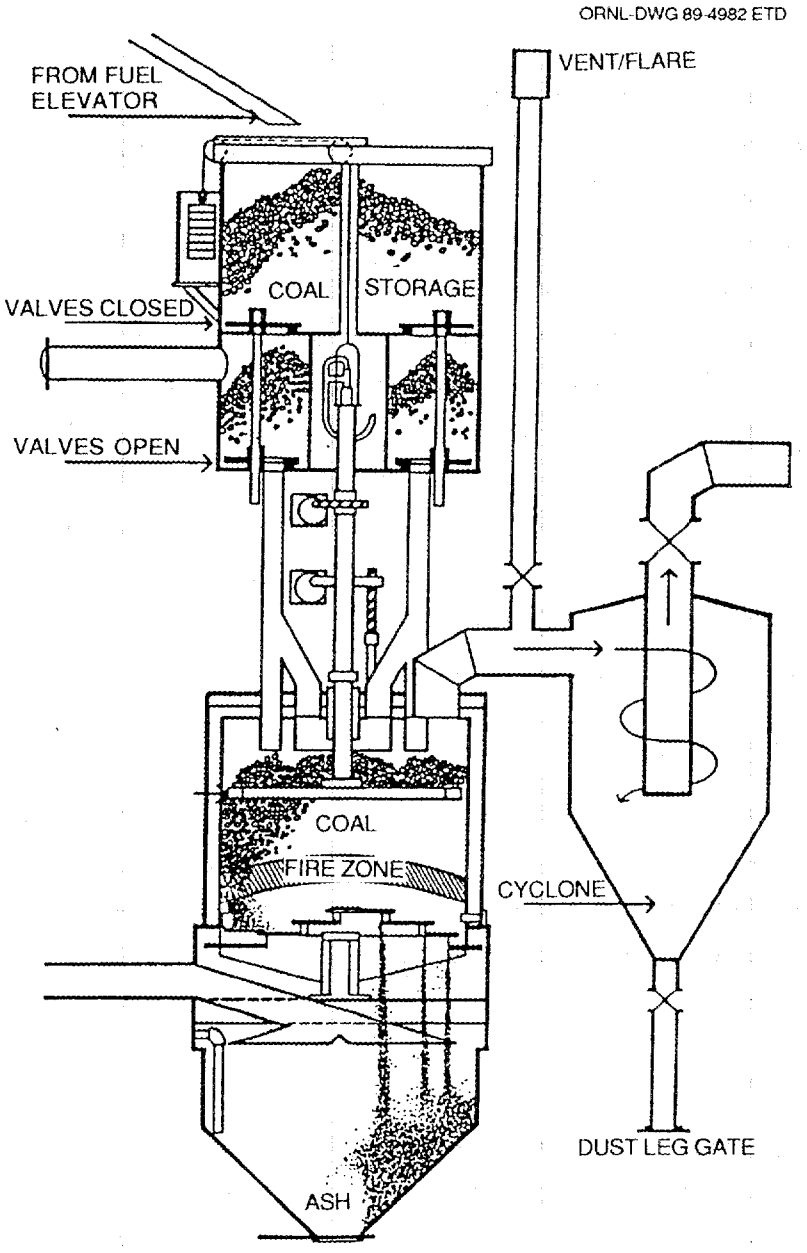


Fig. 13. Wellman-Galusha gasifier.

### 4.7.1 Description

The specific technology chosen in this category was the Wellman-Galusha gasifier, an atmospheric pressure, fixed-bed/rotating-grate system. The main gasifier vessel is a water-cooled, double-walled cylinder that does not require a refractory lining. The gasifier comes in packaged sizes up to a 10-ft-diam vessel unit. This largest size has a capacity of about 70 MBtu/h input fuel when operating on bituminous coal.

Double-screened coal is fed from above onto a rotating grate, while steam and air are introduced through the grate. Air flows over the top of the water jacket to pick up steam and is then routed underneath the grate. Partial combustion takes place in the coal layer producing a low-heating-value gas. As the gas rises, the coal falling to the grate is dried, heated, and partially devolitilized.

When using bituminous coals, this process is expected to produce a hot gas with a higher-heating-value range of about 130 to 180 Btu per dry standard cubic foot (natural gas is roughly 1000 Btu/$ft^3$). Assuming the gas does not need to be cooled and cleaned, the thermal efficiency may range from 82 to 93%.[43] This gas is then burned in the existing boiler. The boiler flue gas volume per unit heat output is increased by 20% or more over natural gas or oil firing, which will cause some boiler down rating and loss of efficiency.

### 4.7.2 State of Development

The Wellman-Galusha gasifier design has been commercially available for many years.[39-42] Some are currently in use in the United States, mostly in the Northeast. Most of these gasifiers are used to produce process gas rather than to fire a boiler. In the past a large number (over 150) of such gasifiers have been used commercially.[39]

### 4.7.3 Performance

Combustion and boiler efficiency. The efficiency for the gasification process must be measured in terms of a gasification thermal efficiency to produce gas that is delivered to the boiler. If bituminous coals are used and no gas cooling or scrubbing (to remove sulfur, tars,

etc.) is needed before firing the boiler, the expected thermal efficiency range is 83 to 93% for the gasification step.[43] If cooling and/or scrubbing of the gas is required, the efficiency drops significantly.

The resulting low-heating-value gas will cause roughly 20% greater combustion gas volume per unit heat output compared to natural gas, oil, or coal firing at the same value of excess air. In general this will result in some drop in boiler output capacity and will increase stack losses. Boiler efficiencies would be expected to be 73 to 80%.

The overall thermal efficiency (steam output compared to input fuel heating value) is expected to be about 64 to 70% in most cases if the hot raw gas can be burned untreated. This value range must be compared to the boiler efficiency values reported for other technologies. The relatively low efficiency range is a drawback for coal gasification.

Air pollution control. Most ash is collected as bottom ash from the gasifier. Particulates leaving the gasifier can be collected by a hot gas cyclone system, in which case a baghouse may not be needed for the boiler.

Removal of sulfur can be accomplished by stripping hydrogen sulfide from the low-Btu gas using a process such as the Stretford acid gas removal technology.[39] It should be noted that any such treatment of the gas will significantly increase the costs and complexity of this technology.

It is likely that a properly designed burner could control $NO_x$ levels by keeping temperatures low and using controlled introduction of secondary air. It is uncertain whether such low-heating-value gas burners have been sufficiently developed at this time.

Fuel. Sized coal (~1/4 to 2 in.) is required for this gasifier system and will increase the fuel cost somewhat. This size requirement is about the same as for stoker coal. One advantage of the gasification system is that a variety of coals may be acceptable, although highly swelling or very friable coals may cause difficulties.

### 4.7.4 Boiler Design Compatibility

Low-Btu gas would seem to be a suitable fuel for coal-designed and residual oil-designed boilers. Compact distillate oil- and natural gas-

designed boilers would be more difficult to refit because of the increased flame length, decreased flame temperature, and greater flue gas volume encountered when firing low-Btu gas. Boiler ratings for compact boilers would probably be decreased by 20 to 50%. Coal- and residual oil-designed boilers would probably require some down rating for low-heating-value gas firing.

### 4.7.5 Operational Problems/Risks

Although the Wellman-Galusha gasifier has been commercialized for many years, information concerning the general reliability and maintenance requirements is difficult to obtain. There is no reason to believe that a coal gasifier linked to a boiler is any less complex or labor intensive than a coal-fired stoker boiler system.

Operational problems would include the normal difficulties encountered with coal- and ash-handling systems. Integrating the gasifier and boiler may prove difficult, and there is little experience to draw from. Load-following capabilities of the gasifier are uncertain, and low-heating-value gas burners should be studied further.

The output capacity and gas quality of the gasifier is a strong function of the coal utilized. Attention should be paid to the gasification characteristics of all coals to be considered. Determination of actual performance for a given coal may require a test at an existing gasifier to make an accurate assessment.

# 5. FLUE GAS EMISSION CONTROL TECHNOLOGIES

Consideration of air pollution is essential when dealing with coal-burning technologies. Regulations concerning release of $SO_2$, $NO_x$, CO, particulates, and flue gas opacity must be adhered to. Many of the coal-burning technologies described in Chaps. 3 and 4 have some type of inherent $SO_2$ and/or $NO_x$ control. Others will require add-on pollution control equipment to meet regulations. This section provides brief descriptions of some of the air pollution control equipment that can be used with coal-burning technologies.

## 5.1 LIME OR LIMESTONE SLURRY FLUE GAS SCRUBBERS

There are a variety of FGD scrubber systems that are technically applicable to stack gas cleaning in conjunction with either stoker firing or pulverized coal firing. However, due to complexity, degree of commercialization, and expense, only lime and limestone slurry FGD scrubbers are suitable for industrial boiler applications at present.

Lime/limestone slurry scrubbers can be categorized as wet limestone, wet lime, or lime spray-dry systems. These types of scrubbers are described in the sections that follow. For reasons mentioned in this section, the lime spray-dry scrubber design was represented in the cost spreadsheets given in the Appendix.

All types of FGD scrubber systems are fairly costly and labor intensive and can be difficult to operate under some conditions. Relatively few industrial boilers utilize this technology.

### 5.1.1 Lime Spray-Dry Scrubbers

Although lime spray-dry scrubber systems are a more recent technology than wet scrubber systems, they appear to be the most applicable technology available for industrial-size, coal-fired boilers. This type of technology is currently used at Fairchild, Malmstrom, and Griffiss Air Force bases.[44]

A typical flow diagram for this process is shown in Fig. 14.[6] The lime spray-dry scrubber system uses hydrated lime [calcium hydroxide,

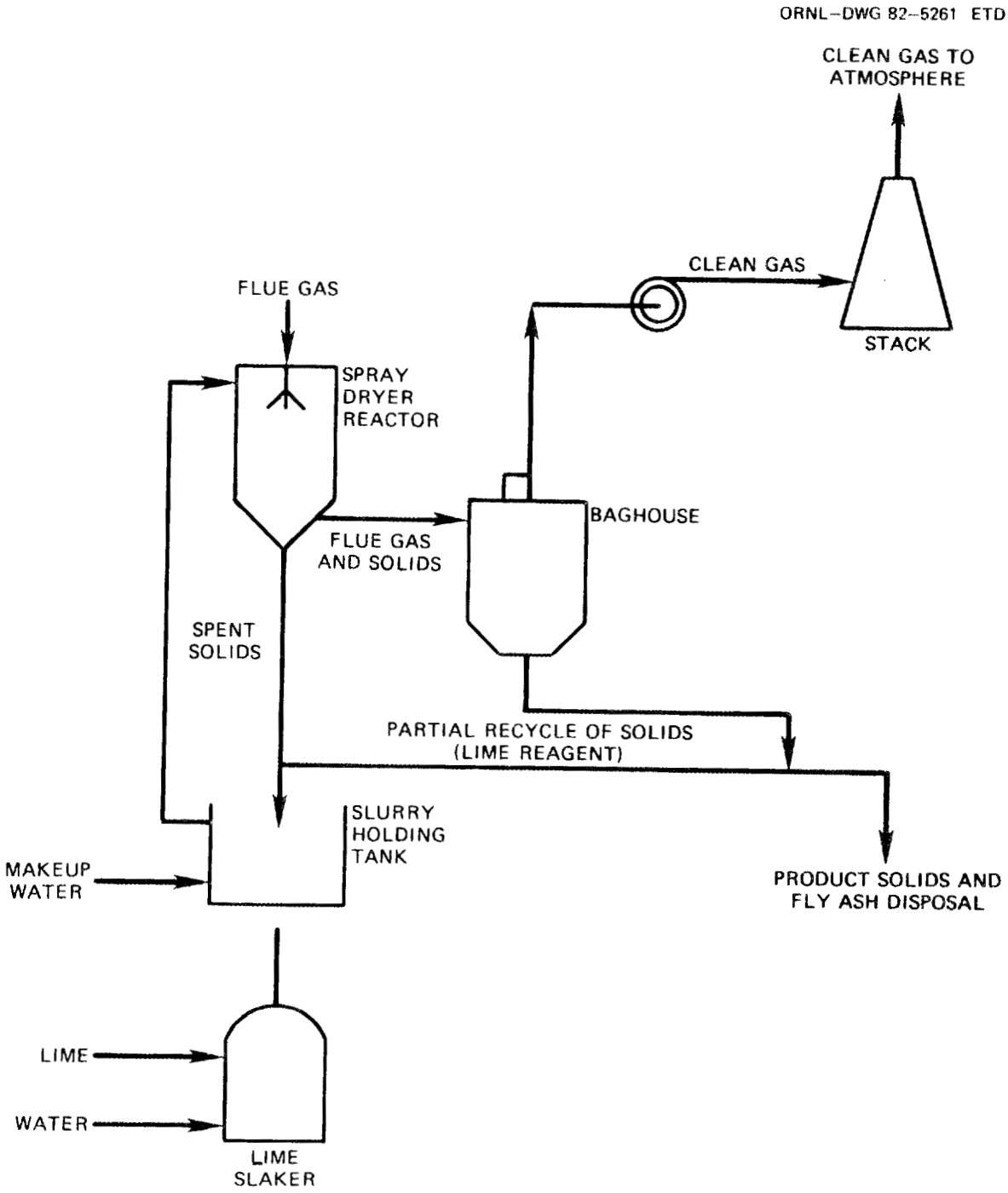


Fig. 14. Process flow diagram for a typical lime or limestone wet scrubbing system.

$Ca(OH)_2$] to react with the $SO_2$ from the flue gas by contact with the atomized slurry. The water in the slurry is evaporated, leaving behind a dry waste. A baghouse system collects the mixture of reaction products, unreacted lime, and fly ash. Solids recycle may be employed by this type of system.

There are several claimed advantages for using a dry scrubber system, especially with industrial boilers. The system removes particulates in addition to $SO_2$, because the baghouse (which would be required anyway) is part of the scrubber system. The dry waste is more easily handled and disposed of than wet scrubber sludge (scrubber blowdown). It also is reported that for small boiler applications, the reliability of spray-dry scrubbers is superior and the capital cost is less when compared to wet systems.

The main disadvantage is that slightly more lime is required when compared to a wet scrubber, due to a lower $SO_2$ capture efficiency. Generally, the wetter process has better sorbent utilization. Typical Ca/S values would be 1.3 to 1.4 compared to 1.1 for a wet scrubber.

### 5.1.2 Lime/Limestone Wet Scrubbers

Lime/limestone wet scrubbing systems are an established technology. The general principle is the same as for a spray-dry scrubber system. Many are currently in use on electric utility coal-fired boilers, but few are used for industrial units.

A process flow diagram is shown in Fig. 15.[6] Lime (or limestone) is slurried with makeup water, then further diluted with recycled process water and pumped into the reaction/holding tank. From the tank, the slurry is pumped and sprayed into the scrubber/absorber module where the $SO_2$ is captured from the gas. The partially reacted slurry drains from the scrubber back into the reaction/holding tank. A stream is drawn away from the tank or the outlet of the scrubber unit for disposal.

The choice between lime or limestone would depend on site-specific considerations. Lime is significantly more expensive than limestone but requires a smaller and less expensive system because of better reactivity with $SO_2$ and because lime will partially dissolve in the water.

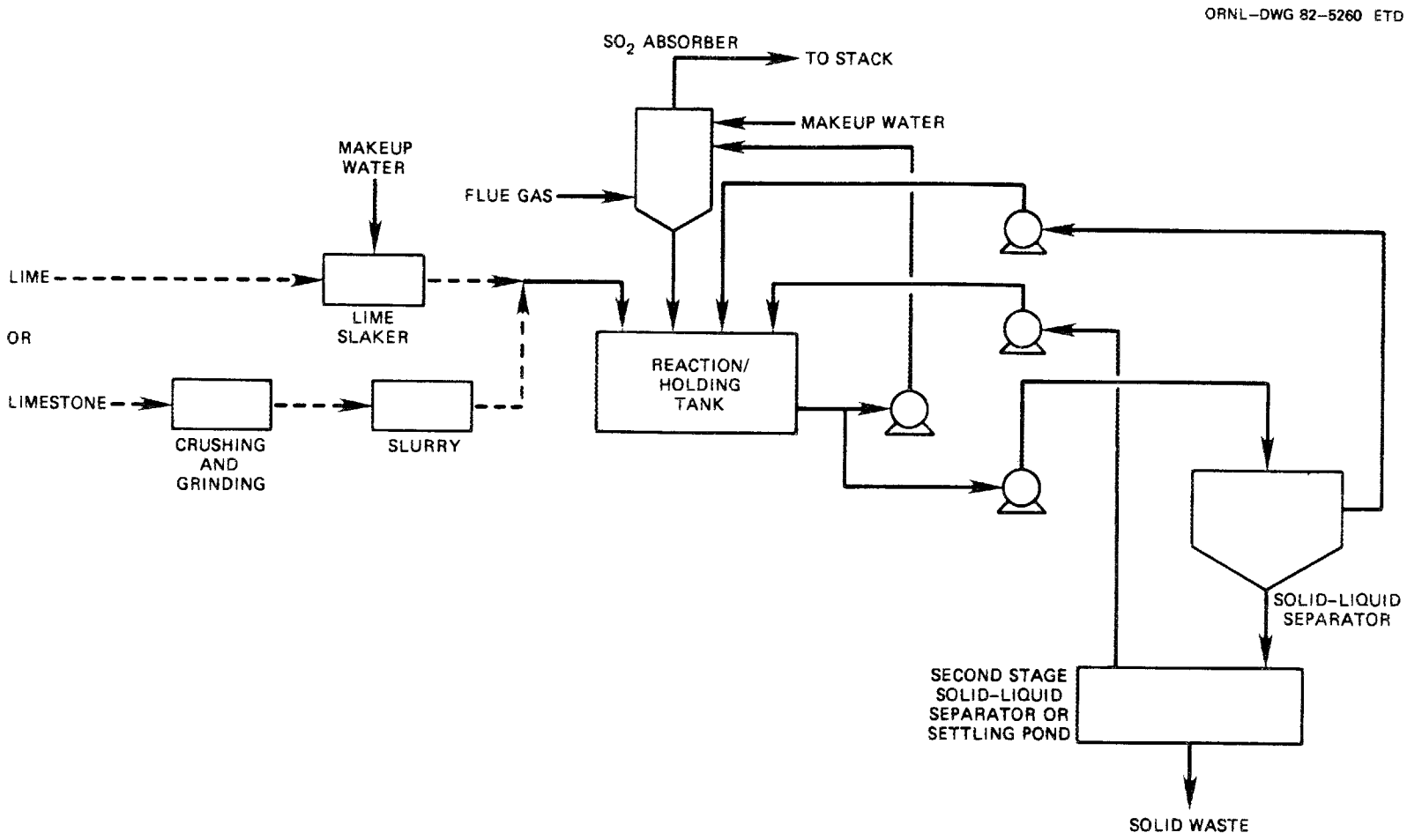


Fig. 15. Typical spray dryer/particulate collection process flow diagram.

Limestone requires a larger scrubber system with lower efficiency and will probably experience greater erosion problems due to abrasion.

## 5.2 $NO_x$ CONTROL

Two basic strategies for limiting $NO_x$ emissions can be identified. Limiting the generation of $NO_x$ by controlling the oxygen levels and temperatures in the combustion zone is the strategy currently being used for many boiler systems.[45] This type of $NO_x$ control is described in Sects. 5.2.1 and 5.2.2. Another basic strategy is to chemically reduce $NO_x$ to $N_2$ downstream of the combustion zone. This latter strategy is not being commercially applied to industrial boilers in the U.S. at the present time.[45] Application of chemical reduction methods to Air Force heating plants is probably not attractive at this time, but these methods may become viable in the future and are described in Sects. 5.2.3 to 5.2.5.

### 5.2.1 Staged Combustion

Several $NO_x$ control methods have been developed based on the careful control of combustion air distribution (stoichiometry) and flame temperature. A significant amount of $NO_x$ can be produced when the combustion region has one or more relatively hot zones with excess oxygen present. Staged combustion avoids this problem by keeping temperatures below some level when excess oxygen is present. Many different names are used for this technique, but the basic principle is the same: the combustion is "staged," such that combustion air and the fuel are introduced in various stages, or in different zones of the overall combustion region. Many of the coal technologies discussed in Chaps. 3 and 4 use some form of staged combustion.

For stoker firing, the term "over-fire air" is used to describe combustion air staging. Additional combustion air is introduced through ports in the furnace at carefully chosen levels above the stoker grate. The primary combustion zone operates fuel-rich. This same concept and terminology can be applied to certain pulverized and fluidized-bed combustion units. Air is introduced through special ports above or downstream from the main combustion region.

Relatively sophisticated burner designs are now available for pulverized and micronized coal that utilize staged combustion. These burners are often called "low-$NO_x$ burners."

### 5.2.2 Flue Gas Recirculation

Flue gas recirculation (FGR) involves extracting a portion of the flue gas and reinjecting it into the combustion air stream. Acting as a diluent, the recirculated flue gas lowers the furnace temperatures somewhat and reduces the concentration of oxygen in the combustion air. Both of these effects help to reduce $NO_x$ formation.

FGR has been applied commercially to some gas- and oil-fired boilers and to a small extent to industrial solid fuel units.[45] Added equipment requirements include more ductwork, a recirculation fan, some device to mix flue gas with air, and more controls.[45] Such a recirculating flue gas system would add a significant cost to a boiler.

### 5.2.3 Catalytic Reduction

Processes are being developed to catalytically reduce $NO_x$ downstream of the combustion region. Flue gases with ammonia or other compounds added are passed through a reactor, producing $N_2$ and water. This technology is being tested on power plants in Japan and Europe. Because of differences in U.S. coal and ash properties, it is not certain how difficult it would be to employ this technology in this country.[46] This technology does not appear to be fully commercialized at this time and is unlikely to be economical for small boiler applications.

### 5.2.4 Chemical Reduction

Methods of using chemical reactions in the flue gas stream without assistance from catalytic reactors have been getting attention recently. No commercial or near-commercial processes are known to be available at this time. This technology may be potentially useful, especially with stoker firing (which produces the most $NO_x$), and should continue to be considered in the future.

### 5.2.5 Reburning

Another way to reduce $NO_x$ to $N_2$ is to burn a limited amount of gas or other fuel downstream from the coal combustion furnace. The reburning fuel is burned such that a fuel-rich combustion zone is used to "destroy" (chemically reduce) the $NO_x$ formed in the main coal combustion zone. This fuel is then burned to completion in a carefully controlled manner (described in Sect. 5.2.1) to avoid $NO_x$ from being reformed.

A drawback is that this technology would require natural gas or a similar fuel be used to control $NO_x$. Furthermore, because of the added combustion zones for the gas and subsequent heat release, this technology may be difficult to apply to existing industrial boilers or hot water generators. Most boilers not originally designed to accommodate this technique would require modifications. This technology seems most suited for electric utility applications and other systems with large furnaces.

## 5.3 PARTICULATE CONTROL

Particulate removal is necessary for any coal combustion technology. The method of choice for boilers in the size range considered for Air Force applications will be baghouse fabric filters. Increasingly strict particulate emission regulations, along with increased reliability and low costs of baghouses, has greatly increased their use in the last 10 years. Another device that is sometimes considered is the electrostatic precipitator (EP), frequently used for large coal-fired boiler applications. In some special cases cyclones or other inertial type mechanical particle separators can be used alone, but they are more often used in conjunction with a baghouse or precipitator. A description of each technology is given here.

### 5.3.1 Mechanical Separators

Most mechanical separators in use today are of the multiple cyclone type. A cyclone is a vertical cylindrical chamber that has a tangential inlet for the particle-laden gas stream. The tangential entry imparts a high degree of "spin," and the resulting centrifugal force pulls the

particulate matter outward to the walls of the cyclone. The gas boundary layer on the wall has little fluid motion, which allows particles that reach the walls of the cyclone tube to fall into a bottom dust-collection hopper. The "cleaned" flue gas escapes upward through a tube in the center of the vortex.

Fly ash collection by multiple cyclones is an established technology and is especially popular for use with coal-fired industrial and utility boilers. Multiple cyclones come in modular configurations, making them applicable to all sizes of industrial boilers. They are, by nature, insensitive to changes in flue gas temperature or chemical content of the fuel. However, removal efficiency is very dependent upon the size distribution of the suspended particles. Reduced separator efficiencies result chiefly from the failure to capture very small particles. These small particulates are difficult to remove centrifugally from the gas because of their small mass. Although cyclones were at one time the most common type of mechanical collectors used for fly ash control, stricter emission regulations have forced cyclones into more of a precleaning role for other particulate removal technologies.

### 5.3.2 Fabric Filters (Baghouses)

A baghouse is relatively simple in construction, consisting of a number of filtering elements (bags) along with a bag-cleaning system contained in a main shell structure with dust hoppers. Particulate-laden gases are passed through the bags so that the particles are removed and retained on the upstream side of the fabric. Application of fabric filtration to cleaning boiler flue gas has been a recent development, with the first successful installations designed in the late 1960s and early 1970s.

Baghouses are now a commercialized technology, and standard designs are available. Because of much experience with fly ash collection, the important design factors and trade-offs are fairly well known. A trade-off must be made between the items such as bag material and acceptable operating temperature range, or air-to-cloth ratio and maximum pressure drop. Obviously the "tighter" a weave is in the fabric, the better the particle removal. Similarly, after an initial coating of

ash collects on the bags, particulate removal is enhanced. Unfortunately, the pressure drop across the bag increases as the particulate layer thickens, requiring more fan power.

The use of baghouses has seen some limitations from the flue gas environment's effect on bag materials, but much progress has been made in this area, and fabric filters continue to have a very promising outlook for coal-burning industrial boiler and hot water generator application. A notable exception is the use of baghouses with coal-oil mixtures or with oil firing in general. Vapor products of incomplete oil burning will clog the bag fabric. Boilers that switch between oil and coal firing usually have a method of bypassing the baghouse when burning oil.

### 5.3.3 EPs

Particulate collection in an EP occurs in three stages. Flue gas-borne particles are charged by ions (using high-voltage electricity) and subsequently migrate to a collecting electrode plate of opposite charge. The collected particulate matter is dislodged from the plates periodically by mechanical rapping or vibration. Electrostatic precipitation technology is an established and proven technology and is applicable to a variety of industrial boiler types and sizes.

Application of an EP to an industrial boiler should have no adverse effect on boiler operation. However, boiler operation can have a significant impact on EP performance. For a given EP/boiler combination, the fuel quality and its effect on particle characteristics is especially important. The precipitation rate tends to drop with increasing particle resistivity and increases with increasing flue gas sulfur content. In fact, the most notable fuel properties affecting the resistivity of the fly ash are the sulfur and alkali (mainly sodium) contents of the fuel being burned. Temperature of the flue gas is also a key factor in resistivity, and this has led to development of "hot-side" and "cold-side" EPs.

# 6. PRELIMINARY COST COMPARISON OF COAL TECHNOLOGIES

Each of the coal technologies described in Chaps. 3 and 4 has been examined to determine costs over an applicable size range. Some general conclusions concerning the economic competitiveness of these coal technologies are discussed in the following text. Note that several of the technologies were found to be similar from an economic standpoint, and large cost advantages were not identified. Also, several of the refit technologies could be better evaluated if information gaps caused by lack of documented operating experience were filled; such information will probably be available in the next few years. More details concerning the development of specific technology cost estimates and a resultant computer model for these costs estimates are given in Chap. 7 and the Appendix.

The size range of foreseeable projects must be first examined to establish some equipment size boundaries. The Air Force steam plants being considered for coal utilization have maximum output capacities of about 150 to 400 MBtu/h, with the exception of Elmendorf, which has a 900-MBtu/h capacity. The year-round average steam outputs have a range of 30 to 160 MBtu/h, with Elmendorf again being the exception at 300 MBtu/h. Coal utilization projects to generate steam or hot water at a central heat plant would involve boilers in a size range of 20 to 300 MBtu/h. Larger boilers may be considered for certain types of cogeneration projects.

The economic attractiveness of each technology considered depends highly on site-specific considerations. Some of the major parameters that affect the relative cost of competing coal technologies are project size, existing boiler design (for refit projects), capacity factor, availability of certain types or grades of coal, the price of delivered coal and other fuels, space available, local air quality and emission regulations, and others. Certain broad conclusions concerning the economic potential of competing coal technologies are summarized in the following subsections.

## 6.1 BOILER REFIT TECHNOLOGIES

The relative costs of technologies suitable to refit existing boilers are briefly discussed below.

Stoker-firing refit. Returning a boiler to stoker firing appears to be a fairly low-cost alternative under certain conditions. Advantages include capital investment requirements that are fairly low in comparison to other alternatives and relatively little technical challenges and risks.

A number of drawbacks can also be cited for returning a boiler to stoker firing. This technology is only applicable to boilers originally designed for stoker firing. The stoker coal required is a somewhat more expensive grade of fuel in comparison to run-of-mine coal, which is suitable to some refit technologies. Only very modest $NO_x$ control is possible with stoker firing, and $SO_2$ control requires major equipment additions to the boiler plant. If a scrubber system for sulfur removal is required, it is difficult for this technology to be economically competitive.

Micronized coal combustion. When considering industrial boiler refit projects, micronized coal combustion appears to be the most cost-effective technology under many conditions. The major advantages are low capital investment and the ability to use run-of-mine coal rather than more costly stoker coal. Micronized coal firing requires the lowest capital investment of the dry coal-firing options; only slurry firing requires less capital.

Some important questions concerning the environmental performance, equipment reliability, and compatibility with various boiler designs remain only partially answered at this time. It appears that 50% or more sulfur capture is fairly easily attained with this technology and that relatively good $NO_x$ control is achievable. More information and experience with this technology is necessary to correctly assess applicability to boiler refit.

Slagging combustors. Slagging combustor technology appears to require significantly more capital investment than micronized coal or refit to stoker firing. However, there is some possibility that this

technology may have applications where micronized coal or stoker firing are inappropriate. More information is needed concerning environmental performance, equipment reliability, and compatibility with boilers of various designs before a more accurate comparison can be made.

Some advantages of slagging combustor technology include use of run-of-mine coal and removal of most of the ash before entry into the boiler. This technology may be able to capture over 85% of the sulfur, but this awaits further demonstration. Relatively good $NO_x$ control has been reported for this technology.

BFBC modular refit. The option of adding a BFBC module on the "front end" of an existing boiler is estimated to require the highest capital investment of the refit alternatives considered. Although requiring more capital than other firing methods, this technology has been proven capable of meeting rigid air quality regulations. BFBC technology may have applications when $SO_2$ and $NO_x$ emissions must be low; conditions under which micronized coal and slagging-combustor technologies are not yet proven. Also, BFBC can handle the broadest range of coals of the refit technologies.

Some questions concerning equipment reliability and maintenance requirements remain unresolved. More information concerning this issue should be available as existing BFBC units of this particular design gain more experience (see Sect. 4.3).

Coal slurries. Coal slurry firing does not appear competitive at this time because slurry fuels are expensive. Estimated costs for large quantities of coal-water mixtures are consistently above $3.25/MBtu.[38] Coal-oil mixtures currently are estimated to cost more than $3.75/MBtu based on information from vendors. These prices for slurry fuels assume that large central slurry manufacturing plants are built and able to run at high capacity. Actual prices for small quantities of slurry fuel are prohibitive. Costs for slurries made from highly cleaned coals will be higher.

Using slurry firing can have advantages. Slurry technology might be applicable at a site where a coal pile and/or coal-handling system could not be used because of space limitations or aesthetics, and for this reason it should be given further consideration. Slurry refit

equipment takes up the least amount of space and requires the least capital investment of the refit technologies considered. Labor requirements should be slightly less for slurry firing compared with dry coal utilization.

Low-Btu gasification. Refit of boilers using low-Btu gasification seems to be the least economic boiler technology for likely project scenarios. The capital investment required is relatively high and the system efficiency is low. Coals used for this technology must be screened to a size range similar to stoker coal, and therefore the fuel price will be somewhat higher than run-of-mine coal.

## 6.2 BOILER REPLACEMENT TECHNOLOGIES

The relative cost of selected complete new coal-burning boiler (or hot water generator) systems are discussed in this section.

### 6.2.1 Stoker-Fired and FBC Package Units

For small projects, packaged (factory-assembled units shipped to be installed on site) boilers are generally much less capital intensive than field-erected boilers. The major limitation of packaged boilers is the size constraint of about 50 MBtu/h per unit. This represents the physical size limit of a coal-fired boiler that can be shipped by rail.

There are many designs of packaged coal-fired boilers available, with the major boiler design choice being between a shell or water-tube boiler (Sect. 3.1). Shell boilers are less expensive but are restricted to pressures under 300 psig. Water-tube designs usually require more investment but can be designed for higher-pressure steam. Shell boilers would be adequate for most Air Force heating plants because most have relatively low-pressure steam or hot water systems. Shell boilers are not applicable to cogeneration applications because of steam pressure limitations, and coal-fired packaged boilers are usually considered too small for cogeneration projects.

Stoker-fired and BFBC packaged boilers are commercially available. Costs of a packaged BFBC shell boiler are somewhat greater than a packaged stoker-fired shell boiler.[3,10] The FBC boiler is more attractive

if $SO_2$ and/or $NO_x$ emissions must be controlled beyond the capabilities for a stoker-fired unit. Using a packaged stoker boiler in conjunction with a FGD scrubber system is prohibitively expensive.

Stoker-fired and BFBC shell (rather than water-tube) packaged boilers were considered for detailed costing in the generic cost computer model (see Appendix). Although water-tube packaged units might be an option worth considering in some cases, the cost differences between shell and water-tube units are relatively small, and shell boilers will represent the "best" case in most situations.

For certain projects, it may be necessary to choose between installing a single coal-fired, field-erected boiler or multiple-packaged coal-fired boilers. Such a decision is a difficult one, and consideration must be given to technical and operational issues. In rough terms, it appears that packaged coal-fired boilers are often the economical choice when the desired total heat output from coal firing is 100 MBtu/h or less (one or two packaged boilers). In general, installation of one or two packaged boilers would likely be the economic choice over a single field-erected unit. If three or four packaged units are required, the overall cost will likely be similar to a single field-erected boiler. It is unlikely that installation of five or more packaged units could be competitive with one or two field-erected units.

### 6.2.2 Field-Erected Boilers

Field-erected boilers are the logical choice for relatively large output capacity coal-fired systems. Four major categories of boilers are commercially available: stoker-fired, pulverized-coal-fired, BFBC, and CFBC.

Circulating FBC boilers tend to be costly because of the high capital investment required for CFBC systems. A CFBC boiler requires more capital than other boiler designs, although overall project costs may be similar if the alternative is a pulverized coal plant with FGD scrubber systems. The major reasons this technology should be considered is the possibility of burning inexpensive low-grade fuels, and a CFBC can meet stringent air quality ($NO_x$ and $SO_2$) regulations. Generally, CFBC is applicable to large projects and may be useful in a cogeneration system.

The overall costs for stoker-fired, BFBC, and pulverized coal combustion, field-erected boilers appear to be fairly close when air quality regulations are lenient. A trade-off is made between capital, O&M, and fuel costs. The choice of technologies would depend partially on specific fuel price differences in locally available coals. The FBC and pulverized coal units may be able to utilize cheaper fuels than the stoker boiler, but stoker boilers require less investment. If $NO_x$ and $SO_2$ emissions must be low, the BFBC unit is favored.

# 7. CONCLUSIONS AND RECOMMENDATIONS

Coal-based technologies that have potential application for converting oil- and gas-fired Air Force central heating plants to coal firing were identified and reviewed. Only technologies that could conceivably be well proven and fully commercialized by 1994 have been considered. Technologies have been examined to define their important characteristics, applications, and costs.

Coal utilization technologies were categorized as either being applicable to boiler/hot water generator refit or for boiler/hot water generator replacement. Refit technologies retain the existing boiler or hot water generator as a major component of the resulting coal-fired heating system. Technologies identified as appropriate for refit application are

1. micronized coal-firing systems,
2. slagging pulverized coal combustors,
3. modular BFBC systems (add-on to boiler),
4. returning to stoker firing (stoker-designed boilers only),
5. coal slurry firing systems, and
6. fixed-bed, low-heating-value gasifiers.

Because very few coal-utilizing boiler refit projects have been done, information is somewhat sketchy. Most of these technologies are considered as "emerging" rather than fully commercialized, and questions concerning equipment availability, maintenance requirements, performance, and boiler compatibility are only partially answered. The technology that should pose the least technical challenges is returning boilers originally made for stoker firing back to stoker firing. Currently operating commercial and demonstration projects involving micronized coal-firing, slagging combustors, and modular BFBCs should help to clarify issues in the next few years.

From a cost standpoint, micronized coal firing seems to be the leading technology for small refit projects involving coal or heavy-oil-designed boilers where only modest $SO_2$ removal is needed. The return to stoker option may also be a good candidate if emission regulations can

be achieved. For more stringent $SO_2$ regulations, the BFBC option or slagging combustor option could be good technologies.

Because of the many different situations and requirements at Air Force central heating plants, all of the technologies listed should be considered to some extent.

The replacement boiler technologies considered are commercialized and include

1. stoker-fired packaged boilers;
2. BFBC packaged boilers;
3. stoker-fired, field-erected boilers;
4. pulverized coal, field-erected boilers;
5. BFBC field-erected boilers; and
6. CFBC field-erected boilers.

Generally, stoker or pulverized coal technology would be applicable when modest $NO_x$ control is required and $SO_2$ emissions can be met with low-sulfur coal. To control $SO_2$ emissions, a scrubber system can be added, but this can greatly increase costs. BFBC and CFBC technology are generally favored when $SO_2$ and $NO_x$ emission regulations are strict. A CFBC system will normally require the most capital investment of these technologies, but it can meet relatively stringent environmental standards and can utilize low-grade fuels.

Small projects will favor using packaged boilers rather than field-erected units. If more than 100 MBtu output is desired from a coal-utilization project, the field-erected units should be considered.

## REFERENCES


1. E. Farahan, *Central Heating-Package Boilers*, ANL/CES/TE 77-6, Argonne National Laboratory, Argonne, Ill., May 1977.

2. J. F. Thomas, R. W. Gregory, and M. Takayasu, *Atmoshperic Fluidized Bed Boilers for Industry*, ICTIS/TR35, IEA Coal Research, London, United Kingdom, November 1986.

3. R. Shedd, Stone Johnston Corp., Ferrysburg, Mich., personal communication to J. F. Thomas, Martin Marietta Energy Systems, Inc., Oak Ridge Natl. Lab., January 23, 1986.

4. The Babcock and Wilcox Company, *Steam/Its Generation and Use*, 38th ed., New York, 1972.

5. D. Paton, D. K. Wong, and R. J. Batyko, "Package Boiler Design and Development," pp. 75–82 in *The Power Behind Competitive Industries*, PWR-Vol. 2, presented at The 1987 Industrial Power Conference, Atlanta, Ga., October 25–28, 1987.

6. J. F. Thomas, E. C. Fox, and W. K. Kahl, *Small- to Medium-Size Coal Plants: Description and Cost Information for Boilers and Pollution Control Equipment*, internal report, Union Carbide Corp. Nuclear Div., Oak Ridge Natl. Lab., March 1982.

7. E. T. Pierce, E. C. Fox, and J. F. Thomas, *Fuel Burning Alternatives for the Army*, Interim Report E-85/04, Construction Engineering Research Laboratory, U.S. Army Corps of Engineers, Champaign, Ill., January 1985.

8. J. Makansi and R. G. Schwieger, "Fluidized Bed Boilers, Special Report," *Power*, May 1987, pp. S1–S16.

9. R. G. Schwieger, "Fluidized Bed Boilers Achieve Commercial Status Worldwide," *Power*, February 1985, pp. S1–S16.

10. Campbell Soup Company, Camden, N.J., personal communication to J. F. Thomas, Martin Marietta Energy Systems, Inc., Oak Ridge Natl. Lab., January 28, 1986.

11. C. Rice, Kraft Food Ingredients Corp. (Anderson Clayton Foods), Jacksonville, Ill., personal communication to J. F. Thomas, Martin Marietta Energy Systems, Inc., Oak Ridge Natl. Lab., September 1988.

12. R. C. Lutwen and T. J. Fitzpatrick, *A Comparison of Circulating Fluid Bed, Bubbling Fluid Bed, Pulverized Coal and Spreader Stoker Power Plants*, 23rd Annual Kentucky Industrial Coal Conference, Lexington, Ky., April 11, 1984.

13. S. B. Farbstein and T. Moreland, *Circulating Fluidized Bed Combustion Project*, proceeding of the 6th Annual Industrial Energy Conservation Technology Conference, Vol. II, pp. 821–32, Houston Tex., April 15, 1984.

14. S. B. Farbstein, Cleveland, Ohio, private consultant to B. F. Goodrich Chemical Group, personal communication to J. F. Thomas, Martin Marietta Energy Systems, Inc., Oak Ridge Natl. Lab., January 28, 1986.

15. H. W. Brown, Birmingham, Alabama, Pyropower Corporation, personal communication to J. F. Thomas, Martin Marietta Energy Systems, Inc., Oak Ridge Natl. Lab., February 1986.

16. R. J. Gendreau and D. L. Raymond, *An Assessment of Commercially Operating Circulating Fluidized Bed Boilers*, presented at the Seminar on AFB Technology for Utility Applications, April 8–10, 1986, Palo Alto, Calif., sponsored by the Electric Power Research Institute.

17. J. A. Quinto, Combustion Engineering Inc., Windsor, Conn., personal communication to J. F. Thomas, Martin Marietta Energy Systems, Inc., Oak Ridge Natl. Lab., June 25, 1986.

18. R. J. Batyko, Babcock and Wilcox, Barberton, Ohio, personal communication to J. F. Thomas, Martin Marietta Energy Systems, Inc., Oak Ridge Natl. Lab., October 25, 1987, and January 15, 1988.

19. D. F. Dunphy and V. S. Ramapriya, *Coal Conversion Considerations for Industrial Boilers*, Riley Stoker Corp., Worcester, Mass., presented at the Plant Engineering and Maintenance Conference East, Philadephia, Pa., September 16–18, 1980.

20. R. S. Sadowski, Wormser Engineering, Inc., Woburn, Mass., personal communication to J. F. Thomas, Martin Marietta Energy Systems, Inc., Oak Ridge Natl. Lab., June 27, 1986.

21. D. L. Swanda, Deltak Corp., Minneapolis, Minn., personal communication to J. F. Thomas, Martin Marietta Energy Systems, Inc., Oak Ridge Natl. Lab., March 16, 1988.

22. T. Lanager, TCS, Inc., Washington, D.C., personal communication to J. F. Thomas, Martin Marietta Energy Systems, Inc., Oak Ridge Natl. Lab., September 13, 1988, and May 1, 1989.

23. A. R. Snow, TAS-Systems, Magna, Utah, personal communications to J. F. Thomas, Martin Marietta Energy Systems, Inc., Oak Ridge Natl. Lab., December 11 1986, July 27, 1987, and other dates.

24. J. Bicki, St. Louis University Hospital, St Louis, Mo., personal communication to J. F. Thomas, Martin Marietta Energy Systems, Inc., Oak Ridge Natl. Lab., during site visit, September 13, 1988.

25. L. Bradshaw, Idaho Supreme Potatoes Inc., Firth, Idaho, personal communication to J. F. Thomas, Martin Marietta Energy Systems, Inc., Oak Ridge Natl. Lab., March 4, 1988.

26. L. D. Borman, Micro Fuels Corp., Ely, Iowa, personal communication to J. F. Thomas, Martin Marietta Energy Systems, Inc., Oak Ridge Natl. Lab., March 16, 1988.

27. A. Wiley, Micro Fuels Corp., Ely, Iowa, personal communication to J. F. Thomas, Martin Marietta Energy Systems, Inc., Oak Ridge Natl. Lab., March 22, 1989.

28. "Micronized Coal Eases Conversion from Oil and Gas," *Power*, pp. 47–48 (October 1984).

29. E. T. Robinson, O. G. Briggs, Jr., and R. D. Bessette, *Comparisons of Micronized Coal, Pulverized Coal and No. 6 Oil for Gas/Oil Utility and Industrial Boiler Firing*, Riley Stoker Corp., Worcester, Maine, presented at the American Power Conference, 50th Annual Meeting, Chicago Ill., April 18–20, 1988.

30. R. E. Viani, TRW Inc., Redondo Beach, Calif., personal communications to J. F. Thomas, Martin Marietta Energy Systems, Inc., Oak Ridge Natl. Lab., December 10, 1986, and February 4, 1987.

31. Coal Tech Corp., Merion, Pa., *Comprehensive Report to Congress, Clean Coal Technology Program, Advanced Cyclone Combustor with Integral Sulfur, Nitrogen and Ash Control*, DOE/FE-0077, U.S. Department of Energy, Office of Fossil Energy, Washington, D.C., February 1987.

32. K. Moore, TransAlta Research Corp., Calgary, Alberta, Canada, personal communication to J. F. Thomas, Martin Marietta Energy Systems, Inc., Oak Ridge Natl. Lab., December 9, 1986.

33. R. Mongeon, Riley Stoker Corp., Worcester, Maine, personal communication to J. F. Thomas, Martin Marietta Energy Systems, Inc., Oak Ridge Natl. Lab., December 4, 1986.

34. J. Makansi, "Slagging Combustors Expand In-furnace Coal-Retrofit Options," *Power*, pp. 33–36, March 1987.

35. *Proceedings of the 13th International Conference on Coal and Slurry Technology*, held in Denver, Colo., April 12–15, 1988, Coal & Slurry Technology Association, Washington, D.C.

36. D. V. Keller, Otisca Industries, Ltd., Syracuse, N.Y., personal communication to J. F. Thomas, Martin Marietta Energy Systems, Inc., Oak Ridge Natl. Lab., April 14, 1988.

37. D. C. Fuller, CoaLiquid, Inc., Louisville, Ky., personal communication to J. F. Thomas, Martin Marietta Energy Systems, Inc., Oak Ridge Natl. Lab., May 13, 1987.

38. A. E. Marguiles (principal investigator), Stone & Webster Engineering Corporation, *Economic Evaluation of Microfine Coal-Water Slurry*, EPRI CS-4975, Electric Power Research Institute, Palo Alto, Calif., December 1986.

39. Dravo Corporation, *Handbook of Gasifiers and Gas Treatment Systems*, FE-1772-11, U.S. Energy Research and Development Administration, February 1976.

40. H. F. Hartman, J. P. Belk, and D. E. Reagan, *Low Btu Gasification Processes Vol. 2. Selected Process Descriptions*, ORNL/ENG/TM-13/V2, Union Carbide Corporation Nucl. Div., Oak Ridge Natl. Lab., November 1978.

41. R. E. Maurer, Black, Sivalls & Bryson Inc., Houston, Tex., personal communication to J. F. Thomas, Martin Marietta Energy Systems, Inc., Oak Ridge Natl. Lab., November 14, 1986.

42. H. Campbell, Dravo-Wellman Co., Pittsburgh, Pa., personal communication to J. F. Thomas, Martin Marietta Energy Systems, Inc., Oak Ridge Natl. Lab., December 4, 1986.

43. D. Thimsen et al., *Fixed-Bed Gasification Research Using U.S. Coals, Volume 19, Executive Summary*, U.S. Department of Interior, Bureau of Mines, Minneapolis Minn., December 1985.

44. T. G. Fry, HQ/SAC, Offut Air Force Base, Nebraska, personal communication to J. F. Thomas, Martin Marietta Energy Systems, Inc., Oak Ridge Natl. Lab., May 20 and 21, 1987.

45. J. Makansi, "Reducing $NO_x$ Emissions — A Special Report," *Power*, pp. S1–S13, September 1988.

46. G. R. Offen et al., Stationary Combustion $NO_x$ Control, *JAPCA* 37(7), 864–70 (July 1987).

# Appendix A

## COST ALGORITHM AND COMPUTER PROGRAM DEVELOPMENT FOR COAL-CONVERSION PROJECT COST ESTIMATING AND ANALYSIS

### A.1 BACKGROUND FOR COST ESTIMATING

Over the past decade, ORNL has been involved in industrial-scale central steam plant analysis work, industrial coal utilization studies, and combustion system research and development. As a result, a large amount of industrial heating plant cost information was available from both published[1-8] and in-house sources. Many published sources of costs information that did not involve ORNL have been reviewed as well.[9-15]

A large amount of cost information concerning industrial heating plants can be found in a report entitled *Fuel-Burning Technology Alternatives for the Army*, published by the Army Corps of Engineers, Construction Engineering Research Laboratory.[1] This report contains background information and cost equations developed by ORNL for a variety of coal-based industrial energy systems and other energy technologies. Relevant technologies examined in this report include stoker and BFBC packaged boilers; stoker, pulverized coal, BFBC, and CFBC field-erected boilers; reconversion of boilers back to stoker firing, coal gasification, coal-oil and coal-water slurry refit of boilers, baghouse systems, lime, and limestone scrubber systems; and gas- and oil-fired boilers.

This previous study[1] was used as a starting point to develop a full set of consistent and comparable cost estimates for all technologies considered. Several of the refit technologies are new or "emerging," and no previous cost estimating and analysis work was available for these systems. Furthermore, updating and further investigation was warranted for the recently established, but commercialized, technologies, particularly CFBC systems. For these reasons, a significant investigative effort to establish and review cost information was undertaken.

The approach taken was to carefully examine the similarities and differences between the new technologies and the more established technologies that already have well-documented costs available. This was

translated into itemized cost estimates that highlighted these similarities and differences. Investigation was carried out by contacting vendors and users of the new technologies by phone, letter, and site visits. Significant amounts of new investigative work concerning cost estimation was carried out for micronized coal firing,[16-21] slagging combustors,[22] BFBC "add-on" systems,[23-25] coal-water slurry and coal-oil slurry firing,[13,26,27] packaged low-Btu gasification,[14,28,29] BFBC packaged boilers,[30,31] and CFBC field-erected boilers.[32-34]

## A.2 COST ESTIMATING ASSUMPTIONS AND APPROACH

### A.2.1 General Design Assumptions

It was desired to develop realistic and comparable cost estimates for all the technologies reviewed in this report. A number of design assumptions were made when developing cost estimates, and these assumptions were applied to the technologies whenever appropriate. A list of such assumptions is given below. Note that these assumptions apply specifically to the cost algorithms and the version of the computer program presented later.

1. A boiler house is required for all technologies. The building is an insulated metal structure with lighting, ventilation, stairways and gratings, an office, a control room, and a washroom. For the refit technologies, a boiler house addition was assumed to be added based on the estimated space the additional equipment would require.

2. The coal-handling system is assumed to feature a truck unloading facility with an under-truck hopper, crushers (if needed), a 30-d storage site, a bucket elevator or belt conveyor, and a 1-d capacity overhead feed bunker. Eastern bituminous coal is assumed to be the design fuel. If a railroad car unloading facility is desired rather than truck unloading, and a three-coal-day silo is added, the total cost (of the coal-handling facility) would be roughly 50% more.

Technologies that use limestone injection to reduce sulfur emissions (micronized coal, slagging combustors, all fluidized-bed technologies, and slurry firing) have a modest limestone-handling system that is added to the cost of the coal-handling equipment. This cost would not be included if sulfur capture is unnecessary.

3. The slurry fuel-handling systems are assumed to include a 30-d steel cone roof insulated tank, with heating and circulation pumps. Special piping and pumps are required, and each pump has a redundant spare. All lines are insulated and have heat tracing.

4. The ash-handling system includes a bottom ash hopper system under the boiler and clinker grinder for all coal-burning technologies except for micronized coal firing, which uses air puffers to entrain settled fly ash collected by the baghouse. All coal technologies include a pneumatic ash-conveying system for collection of both bottom ash and fly ash and a 1- to 2-d storage silo integrated into a truck loading facility.

For the refit technologies that require installation of a bottom ash-removal system in an existing boiler, it is assumed that a portion of the boiler floor is removed and a pit is dug to accommodate a "v"-shaped ash pit. An ash screw is installed at the pit bottom to remove collected ash, and a clinker grinder is included if necessary.

5. A baghouse fly ash-removal system is assumed to be required for all coal-firing options except coal gasification. The baghouse is sized mainly by the amount of flue gas to be handled and is integrated into the ash-handling system.

6. When a FGD scrubber system is required, it was assumed to be a lime slurry spray-dry design. The design assumes 90% sulfur removal is required. Costs for modifications of the boiler house building and stack are also added to the cost estimate for the scrubber system.

7. Boiler feedwater treatment costs are not included in the following cost estimates, because it is assumed there is an adequate existing system. Although a water treatment system is not a large cost for systems producing low-pressure steam, it may be desired to add this item for projects that cannot utilize an existing treatment system.

### A.2.2 Operating and Maintenance Assumptions

1. It is a distinct possibility that a coal-utilization project would only convert a portion of an existing oil or gas heating plant to coal firing. Under such circumstances it is assumed that coal would be used to the greatest extent possible to generate heat. Oil or gas

firing would be used for the portion of the heat demand greater than the coal equipment could handle, and when the coal equipment was shut down for repair and maintenance. This is often referred to as using coal to meet "base load." Generally, a load factor range of ~50 to 85% has been assumed.

2. Full-time employees are required for routine O&M and for minor repair work. Central heating plants are assumed to be staffed for operation 24 h/d throughout the entire year.

3. A heating plant containing a single boiler or hot water generator heat plant was chosen as a starting point to estimate labor requirements. It was estimated that for a 25-MBtu/h output stoker boiler, ten employees are needed for 24-h/d year-long operation. If the boiler is 250 MBtu/h output, 15 people are required.

4. Many major repairs and major maintenance efforts are accomplished using "outside" contracts for labor and materials. This would include planned and unplanned major boiler overhauls and repairs, repairs to peripheral equipment, water-treatment services, control system improvements, etc.

### A.2.3 Development of Cost Tables

In order to develop consistent cost estimates for the large number of technologies under consideration, itemized cost tables were developed. By keeping many of the cost categories identical for the different technologies, most cost items can be directly compared. This allows specific cost differences to be examined with relative ease.

Two types of cost table were developed for each technology, one table for capital investment and one for O&M costs. Lists that give the chosen cost categories for the two types of cost tables are given in Table A.1. This concept of itemized cost tables was subsequently used to develop a spreadsheet-type computer program, which will be discussed later. The spreadsheet tables are presented later as Tables A.2 to A.29.

Table A.1. Cost categories used to develop comparable cost estimates for coal-utilization technologies

| |
|---|
| Capital investment cost categories |
| Site work and foundations |
| New boiler system/boiler modifications/tube bank modifications |
| Soot blowers |
| Combustion system |
| Boiler house/boiler house modifications |
| Fuel handling and storage |
| Bottom ash pit system |
| Ash handling |
| Electrical and piping (equipment) |
| Baghouse |
| FGD lime spray-dry scrubber system/gas desulfurization |
| O&M cost categories |
| Direct manpower (fixed) |
| Repair labor and materials (fixed) |
| Electricity (fixed) |
| Electricity including baghouse power consumption (variable) |
| Baghouse (fixed) |
| Limestone or hydrated lime (variable) |
| Ash and spent sorbent disposal (variable) |
| FGD scrubber system (variable)/gas desulfurization (variable) |
| FGD scrubber system (fixed) |

## A.3 DEVELOPMENT OF COST ALGORITHMS

It was desired to develop relatively simple cost equations for each cost category that would be useful for the range of projects under consideration. This section explains the logic that went into development of cost algorithms.

Two important variables (or scaling factors) to consider for capital investment are the size of the boilers/hot water generators measured by output heat and the number of such units. In general, the costs considered will follow an "economy of scale," which recognizes that as equipment size increases, the costs increase at a lesser rate. This

relationship can often be expressed as a power function of output capacity rating.[1-5,10] A typical equation would be of the form

$$\text{cost} = A \times X^b , \qquad (A.1)$$

where A is a constant, X is the output capacity rating in MBtu/h or other "sizing" variable, and b is the exponential scaling factor and is virtually always a number between 0 and 1. The values given for A and b were estimated from examining data found in the references given for this Appendix.

Another type of economy of scale can occur when two or more identical units are installed. The cost of installing two units is less than twice the cost of installing a single unit because of shared overhead, design work, site preparation, etc. A power function similar to the previous example or some other type of function can be used to simulate this effect on cost. Applications of this concept are presented in Sects. A.3.2 and A.4.2.

The economy-of-scale concept applies to certain categories of O&M costs. For example, labor requirements would be a function of the system output size and the number of units. A 250-MBtu/h coal-fired boiler will require more labor to operate than a 50-MBtu/h unit, assuming similar design and application. Also a 250-MBtu/h boiler would require less labor to operate and maintain than five 50-MBtu/h boilers because of the added complexity of a plant with multiple boilers.

### A.3.1 Capital Investment

Capital investment algorithms developed for each individual cost category are meant to calculate the direct cost for equipment, construction, and installation. Separate cost categories were reserved for the total indirect cost and for contingency. Indirect costs include costs for engineering, field expenses, insurance, contractor fees, working capital, and equipment testing. For all technologies, the indirect cost was assumed to be 30% of the total direct cost of a project. Contingency is added for unknown costs and unforeseen problems such as construction interference, modifications, and delays. Contingency was assumed to be 20% of the direct and indirect cost total.

Capital cost algorithms were patterned after Eq. (A.1) for all cost categories. For most costs the major variable is the individual boiler output heat capacity rating. All exceptions to this are explained in this section.

Examination of the cost estimate for a field-erected BFBC boiler will help to illustrate the equations used to estimate capital cost. In Table A.23 a scaling factor of 0.68 is given for the boiler itself, and the cost for that item is $3940K. The form of the equation is

$$\text{cost in K\$/year} = A \times [\text{output rating in MBtu/h}]^{0.68} \ . \qquad (A.2)$$

The boiler (or hot water generator) output rating is given to be 100 MBtu/h. The value of the constant A can be "back calculated" to be $172.0K/(MBtu/h).$^{0.68}$

Note that the units of A are such that the resultant cost will have units of thousands of dollars ($K). The coefficient A includes units of the scaling variable in the denominator taken to the exponent given (0.68). For the remainder of this Appendix, the units in the denominator for cost coefficients such as A in Eqs. (A.1) and (A.2) will be dropped. In essence, when a scaling variable such as X is used in a cost equation, the scaling variable is divided by the quantity 1.0 with the same units. Equation (A.1) is rewritten as

$$\text{cost} = A \times (X/1.0 \text{ MBtu/h})^{b} \ , \qquad (A.3)$$

where X is in units of MBtu/h.

Nearly all scaling factors shown in the tables for capital investment are used in the same manner as the preceding example with a few exceptions. Ash-handling-system costs are scaled by the total estimated amount of ash to be handled per year (tons/year) rather than heat output rating. The ash content of the design fuel may vary over a wide range. Fuel-handling system costs include a small cost for limestone handling for those technologies that feed limestone into the boiler system (this does not include scrubbers) in addition to fuel. This small additional cost for limestone handling is scaled by the amount of limestone estimated to be consumed per year (tons per year). The technologies that

include limestone feeding (when sulfur capture is necessary) are micronized coal, slagging combustors, all fluidized-bed technologies, and slurry firing.

### A.3.2 O&M Costs

The cost algorithms for categories of O&M costs are somewhat more complex than those for capital cost items, because they do not all follow a single pattern.

O&M costs can usually be broken up into what is termed "fixed costs" and "variable costs." Variable costs are those costs incurred because the boiler or hot water generator is running, and such costs do not accrue during shutdown. Examples would include ash disposal costs and electricity costs for operating a pulverizer. Both of these costs would be proportional to the overall load factor of the system. Fixed cost are independent of the heating load factor and would include items such as electricity for lighting and operating labor. Many cost categories can be part fixed and part variable. Table A.1 includes the designation of whether the cost category was assumed to be fixed or variable.

Direct manpower. The largest cost for operating and maintaining a heating plant is the labor requirement. Labor is required for routine operation and maintenance as well as labor for repairs and major maintenance requirements. The category "direct manpower" represents the costs for people employed to operate the heating plant and do routine maintenance, with associated supervision and overhead costs.

A heating plant containing a single boiler or hot water generator was chosen as a starting point to estimate labor requirements. It was estimated that for a 25-MBtu/h output stoker boiler, 10 full-time people are needed for 24-h/d year-round operation. If the boiler is 250 MBtu/h output, 15 people are required. This number of people does not include supervision. The equation made from these labor estimates is

$$\text{number of people} = 5.55 \times \text{SIZE}^{0.18} , \qquad \text{(A.4)}$$

where SIZE is the heat plant output rating in MBtu/h and 0.18 is the resultant scaling exponent.

There is added complexity when a heating plant consists of multiple boilers, and greater labor requirements are needed than the previous equation would indicate. To model this complexity, the equation was modified such that

$$\text{number of people} = 5.55 \times (\text{SIZE}/N)^{0.18} \times N^{0.4} , \qquad (A.5)$$

where SIZE is the heat plant output rating in MBtu/h, and N is the number of boilers/hot water generators. This modification increases labor by 16.5% when two units are present vs only one and increases labor by 27.3% for three units vs one (total plant output capacity is constant).

The basic equation used to calculate direct labor costs for stoker boilers or hot water heaters is

$$\text{annual labor costs} = LC \times 1.33 \times [5.55 \times (\text{SIZE}/N)]^{0.18} \times N^{0.4} , \qquad (A.6)$$

where LC is the yearly cost for a man-year of labor, and the 1.33 multiplier adds a 33% cost for supervision. All benefits and overhead (excluding supervision) are included in LC.

The same labor cost equation is used for all coal technologies examined, with the only change being the coefficient (5.55 for stoker), which determines the number of people. Slurry technologies were assumed to require less labor, and pulverized coal and CFBC technologies require slightly more labor than the stoker system.

Repair labor and materials. Another very significant operating cost for a heating plant is the repair costs. This category includes maintenance and repairs that are not routine and would normally be done under contract. The basic equation for estimating this cost is a power function of the same form as Eq. (A.1).

Repair labor and materials cost are assumed to be fixed rather than variable. This assumption is thought to be realistic for the expected load factor range of 50 to 85%. For load factors well below 50%, lower costs would be expected, and these would be a function of load factor.

Electricity. Electric consumption can be a significant operating cost. A starting point for calculating electric use was the assumption that a stoker boiler plant with one 250-MBtu/h boiler uses about 700 kW when the boiler is operating at maximum output. Electric use was broken into two portions; that which is used regardless if the boiler/hot water generator is operating (a fixed cost) and that which depends on the unit being operated (a variable cost). Expressions for the cost of fixed and variable electric costs are given by Eqs. (A.7) and (A.8).

$$\text{fixed electric use cost} = EC \times (1 - VF) \times B \times X \times 8760\ h/y\ , \qquad (A.7)$$

$$\text{variable electric use cost} = EC \times VF \times B \times X \times 8760\ h/y \times CF\ , \qquad (A.8)$$

where,

VF = variable fraction of electricity at full-load operation,

B = electric use at full-load operation per MBtu heat output (kW/MBtu),

X = boiler/hot water generator output (MBtu/h),

EC = electric cost in $/kWh,

CF = annual capacity factor.

Hydrated lime or limestone. The amount of lime or limestone required is calculated from the amount of sulfur in the coal, the amount of coal burned, and the required Ca/S needed to achieve the appropriate level of sulfur capture. Values are assumed for the cost per ton of lime and limestone.

Ash disposal. Ash disposal costs were assumed to include both coal ash and spent sorbent disposal. The cost is found by calculating the total yearly tons of waste multiplied by an estimated cost per ton. In some cases, the quantity of waste produced from spent lime and limestone will be greater than the coal ash. A factor was used to account for the weight changes driven by chemical reactions that occur as the sorbents are utilized.

Baghouse O&M. Operating labor and repair costs associated with the baghouse system were put into a separate category. This is a fairly small cost. The basic equation for estimating this cost is a power function of the same form as Eq. (A.1). The cost for additional fan power to overcome the added pressure drop due to a baghouse is included under the variable electricity cost category.

FGD system O&M. The operating labor, repair, and utilities costs associated with a FGD scrubber system were put into a separate category from the boiler system costs. These costs are significant because of the relative complexity of the equipment. These scrubber O&M costs have been broken into fixed and variable cost portions. The fixed costs represent labor for operation, maintenance, and repairs and is calculated by an expression of the same form as Eq. (A.1). Variable costs are for the added electric consumption due to the scrubber system and is calculated by an expression like Eq. (A.8).

## A.4 COMPUTER MODEL

A computer program has been developed to estimate generic costs for the coal technologies found to be applicable to Air Force central heating plants. The output of this cost model can be used to compare different technologies and to evaluate projects at a given Air Force base. The objective is to be able to generate consistent cost estimates for each technology considered and have that cost estimate be fairly accurate based on the given set of assumptions. Several important variables are included in the computer program input list to allow for the use of site-specific information in cost estimating.

The cost model is composed of a series of spreadsheets (a spreadsheet is a computer-generated table that has calculating ability), starting with a spreadsheet for inputting information. The majority of the program consists of individual costing spreadsheets arranged in pairs, one of which estimates the annual O&M costs for a given technology and one which estimates the capital investment required. These cost-estimating spreadsheets have been formed from programming the cost algorithms previously discussed into the form of itemized cost tables.

A summary of the results is generated at the program end. The software package used to develop the costing program is Framework II, by Ashton-Tate.

This computer model is capable of generating itemized costs for 13 coal technologies and will handle a wide range of project sizes, variations in existing equipment, and other site-specific considerations. The O&M costs for existing oil- or gas-fired boiler can also be generated. It is a useful tool for a variety of studies such as technology comparisons and preliminary project evaluations.

### A.4.1 Input Spreadsheet

The series of tables (Tables A.2–A.29) that follows represents the output of the computer program developed for costing coal-based technologies. The first table (Table A.2) contains the input parameters to the computer algorithms. Many of these inputs need no explanation; those that are not apparent will be described here.

Parameters listed near the top of the spreadsheet shown by Table A.2 describe the project scope. The total steam/hot water output

Table A.2 Computer program - input spreadsheet

2 X 50 MBTU/H, REFIT/REPLACEMENT, WITH $SO_2$ CONTROL: TEST CASE

| | | | | | |
|---|---|---|---|---|---|
| Total steam/HTHW output | = 100.0 MBtu/h | | | | |
| Boiler capacity factor | = .60 | | | | |
| Number of units for refit | = 2 | | | | |
| Hydrated lime price ($/ton) | = 40.00 | COAL PROPERTIES | | | |
| Ash disposal price ($/ton) | = 10.00 | | | R.O.M. | Stoker |
| Electric price (cents/kWh) | = 5.00 | | Ash fraction = | .100 | .100 |
| Labor rate (K$/year) | = 35.00 | | Sulfur fraction = | .025 | .020 |
| Limestone price ($/ton) | = 20.00 | | HHV (Btu/lb) = | 12000 | 13200 |
| FUEL PRICES | | FUEL PRICES | | | |
| Natural gas price ($/MBtu) | = 3.50 | R.O.M. coal ($/MBtu) | = 1.50 | | |
| #2 Oil price ($/MBtu) | = 4.71 | Stoker coal ($/MBtu) | = 1.75 | | |
| #6 Oil price ($/MBtu) | = 3.67 | Coal/$H_2O$ mix ($/MBtu) | = 3.00 | | |
| OPTIONS | | Coal/oil mix ($/MBtu) | = 3.50 | | |
| Soot blower multiplier | = 1.0 | | | | |
| Tube bank mod multiplier | = 1.0 | Primary fuel is 3 | | | |
| Bottom ash pit multiplier | = 1.0 | NATURAL GAS | | | |
| $SO_2$ control multiplier | = 1.0 | 1=#6 Oil, 2=#2 Oil, 3=NG | | | |
| LIMESTONE/LIME | | | | | |
| Inert fraction | = .05 | | | | |

is the maximum amount of net heat that can be realized by the coal-fired equipment (sometimes known as the maximum continuous rating), regardless of whether this represents one boiler or multiple units. The boiler capacity factor pertains only to the coal-fired project (rather than the total boiler plant) and is defined as the ratio of the yearly average steam output to the rated steam output capacity. In the case example presented here, the capacity factor is given as 0.6 and the rated output capacity is 100 MBtu/h, which means the year-round average steam output is 60 MBtu/h.

The next parameter listed is the number of units for refit. In the case shown, two existing boilers are considered for refit to coal firing (or replacement), and it is implied that each are 50 MBtu/h. No provision has been made in this computer program to look at refitting multiple units of differing size; it is assumed all are of identical output capacity (which would very often be the case).

The parameters listed below the heading "OPTIONS" need some explanation. Four multipliers are listed, and it is intended that each be assigned values of either 0 or 1. A value of 1 turns the cost functions "on" and 0 turns them "off." Values other than 0 or 1 generally should not be used and have no special meaning. These multipliers allow certain costs to be added or excluded, depending on site-specific needs of the boiler plant.

When converting an oil- or gas-fired boiler to coal, certain boiler modifications may be required depending on the specific boiler design. The first three multipliers deal with such modifications to existing units. If the existing boiler has no soot blowers, they will need to be added for employment of most coal refit technologies; this cost will be accounted for if the soot-blower multiplier is set to 1. Tube-bank modifications may also be necessary for certain combinations of coal technology and boiler design. Most refit technologies also require a bottom ash pit and an ash-removal system to be installed if one is not already in place. Again, this multiplier should be set to 1 if the modification is needed.

The final multiplier accounts for the requirement to remove $SO_2$ from the combustion gases. If sulfur removal is not necessary (due to

the use of a coal with a low enough sulfur content to meet air quality regulations) the multiplier is set to 0. When the multiplier is set to 1, the program estimates costs based on 90% sulfur removal being required. There is no intended significance to setting the multiplier to a value other than 0 or 1.

Input values under the heading "COAL PROPERTIES," define some important coal properties. The ash and sulfur contents are given by weight fraction, and the higher heating value is defined. Separate values are entered for run-of-mine and stoker grades of coal.

All other input parameters shown in Table A.2 should need no further explanation.

### A.4.2 Cost Spreadsheets

Spreadsheet results for an example heating plant project are shown in Tables A.3 through A.27. This type of cost estimation is only valid to two significant figures. It should be realized that the cost figures

Table A.3 Micronized coal technology - O&M costs

Technology: MICRONIZED COAL BURNER REFIT TO EXISTING BOILER
SIZE 10-200 MBTU/H

| | | | |
|---|---|---|---|
| Total heat output (MBtu/h) = | 100.0 | COAL, LIMESTONE, ASH | |
| Number of units converted = | 2 | Ash fraction = | .10 |
| Unit output (MBtu/h) = | 50.0 | S fraction = | .025 |
| Fuel to steam/HTHW eff. = | .80 | HHV (Btu/lb) = | 12000 |
| Capacity factor = | .60 | Ton coal/year = | 27375 |
| Ash disposal price ($/ton) = | 10.00 | Ca/S ratio = | 3.50 |
| Electric price (cents/kWh) = | 5.00 | Inert fraction = | .05 |
| Labor rate (K$/year) = | 35.00 | Ton sorbent/year = | 7879 |
| Limestone price ($/ton) = | 20.00 | Waste/sorbent = | .858 |
| | | Ton ash/year = | 9498 |

| CATEGORY | SCALING FACTOR | COST (K$) |
|---|---|---|
| Direct manpower (f) | .18 | 689.3 |
| Repair labor & materials (f) | .36 | 428.6 |
| Electricity (f) | 1.00 | 55.8 |
| Electricity inc. baghse (v) | 1.00 | 95.3 |
| Baghouse (f) | .36 | 33.6 |
| Limestone (v) | 1.00 | 157.6 |
| Ash disposal (v) | 1.00 | 95.0 |
| Nonfuel O&M total | | 1555.2 |

Table A.4 Micronized coal technology - capital investment

Technology: MICRONIZED COAL BURNER - REFIT TO EXISTING BOILER 20-200 MBTU/H

Size (MBtu/h)
Output heat = 100.0
No. of units = 2
Output/unit = 50.0
Multiple unit multiplier = 1.85

| ITEM | SCALING FACTOR | COST (K$) |
|---|---|---|
| Site work & foundations | .50 | 20.2 |
| Boiler modifications | .50 | 9.8 |
| Soot blowers | .60 | 117.1 |
| Micronized combustor system | .52 | 145.3 |
| Boiler house modification | .50 | 20.0 |
| Fuel handling & storage | .40 | 735.0 |
| No bottom ash system | | .0 |
| Ash handling | .40 | 424.2 |
| Electrical | .80 | 75.0 |
| Baghouse | .80 | 388.5 |
| Subtotal | | 1935.1 |
| Indirects (30%) | | 580.5 |
| Contingency (20%) | | 503.1 |
| Total for each unit | | 3018.8 |
| Grand total | | 5584.8 |

Table A.5 Slagging combustor technology - capital investment

Technology: SLAGGING COAL BURNER REFIT TO EXISTING BOILER 20-200 MBTU/H

Size (MBtu/h)
Output heat = 100.0
No. of units = 2
Output/unit = 50.0
Multiple unit multiplier = 1.85

| ITEM | SCALING FACTOR | COST (K$) |
|---|---|---|
| Site work & foundations | .50 | 20.2 |
| Boiler modifications | .50 | 20.2 |
| Soot blowers | .60 | 117.1 |
| Slagging coal burner | .61 | 742.7 |
| Pulverizer system | .60 | 249.9 |
| Boiler house modification | .50 | 40.0 |
| Fuel handling & storage | .40 | 735.0 |
| Bottom ash pit system | .40 | 241.5 |
| Ash handling | .40 | 424.2 |
| Electrical & piping | .80 | 119.8 |
| Baghouse | .80 | 388.5 |
| Subtotal | | 3099.1 |
| Indirects (30%) | | 929.7 |
| Contingency (20%) | | 805.8 |
| Total for each unit | | 4834.6 |
| Grand total | | 8944.0 |

Table A.6 FBC module refit technology - O&M costs

Technology: ADD-ON BUBBLING FBC REFIT TO EXISTING BOILER
SIZE 30-200 MBTU/H

| | | | |
|---|---|---|---|
| Total heat output (MBtu/h) = | 100.0 | COAL, LIMESTONE, ASH | |
| Number of units converted = | 2 | Ash fraction = | .10 |
| Unit output (MBtu/h) = | 50.0 | S fraction = | .025 |
| Fuel to steam/HTHW eff. = | .79 | HHV (Btu/lb) = | 12000 |
| Capacity factor = | .60 | Ton coal/year = | 27722 |
| Ash disposal price ($/ton) = | 10.00 | Ca/S ratio = | 3.00 |
| Electric price (cents/kWh) = | 5.00 | Inert fraction = | .05 |
| Labor rate (K$/year) = | 35.00 | Ton sorbent/year = | 6839 |
| Limestone price ($/ton) = | 20.00 | Waste/sorbent = | .886 |
| | | Ton ash/year = | 8832 |

| CATEGORY | SCALING FACTOR | COST (K$) |
|---|---|---|
| Direct manpower (f) | .18 | 689.3 |
| Repair labor & materials (f) | .36 | 398.9 |
| Electricity (f) | 1.00 | 56.1 |
| Electricity inc. baghse (v) | 1.00 | 65.6 |
| Baghouse (f) | .36 | 33.6 |
| Limestone (v) | 1.00 | 136.8 |
| Ash disposal (v) | 1.00 | 88.3 |
| Nonfuel O&M total | | 1468.5 |

Table A.7 FBC module refit technology
- capital investment

Technology: BUBBLING
FBC MODULE ATTACHED TO
EXISTING BOILER
50-200 MBTU/H

Size (MBtu/h)
Output heat = 100.0
No. of units = 2
Output/unit = 50.0
Multiple unit multiplier = 1.85

| ITEM | SCALING FACTOR | COST (K$) |
|---|---|---|
| Site work & foundations | .50 | 40.4 |
| Boiler modifications | .50 | 20.2 |
| Soot blowers | .60 | 117.1 |
| FBC unit | .60 | 1293.5 |
| Boiler house modification | .50 | 100.0 |
| Fuel handling & storage | .40 | 731.7 |
| Bottom ash pit system | .40 | 241.5 |
| Ash & sand handling | .40 | 412.0 |
| Electrical & piping | .80 | 149.8 |
| Baghouse | .80 | 388.5 |
| Subtotal | | 3494.7 |
| Indirects (30%) | | 1048.4 |
| Contingency (20%) | | 908.6 |
| Total for each unit | | 5451.7 |
| Grand total | | 10085.6 |

Table A.8 Return boiler to stoker firing - O&M costs

Technology: RETURN EXISTING BOILER TO STOKER FIRING
SIZE 10-200 MBTU/H

| | | | |
|---|---|---|---|
| Total heat output (MBtu/h) = | 100.0 | COAL, LIME, ASH | |
| Number of units converted = | 2 | Ash fraction = | .10 |
| Unit output (MBtu/h) = | 50.0 | S fraction = | .020 |
| Fuel to steam/HTHW eff. = | .74 | HHV (Btu/lb) = | 13200 |
| Capacity factor = | .60 | Ton coal/year = | 26904 |
| Ash disposal price ($/ton) = | 10.00 | Ca/S ratio = | 1.30 |
| Electric price (cents/kWh) = | 5.00 | Inerts/CaO frac = | .05 |
| Labor rate (K$/year) = | 35.00 | Ton sorbent/year = | 1682 |
| Hydra lime price ($/ton) = | 40.00 | Waste/sorbent = | 1.558 |
| | | Ton ash/year = | 5311 |

| CATEGORY | SCALING FACTOR | COST (K$) |
|---|---|---|
| Direct manpower (f) | .18 | 689.3 |
| Repair labor & materials (f) | .36 | 398.9 |
| Electricity (f) | 1.00 | 56.1 |
| Electricity inc. baghse (v) | 1.00 | 50.5 |
| Baghouse (f) | .36 | 33.6 |
| Hydrated lime (v) | 1.00 | 67.3 |
| Ash disposal (v) | 1.00 | 53.1 |
| FGD system (f) | .40 | 242.9 |
| FGD system (v) | 1.00 | 52.6 |
| Nonfuel O&M total - no FGD | | 1348.7 |
| Nonfuel O&M total with FGD | | 1644.2 |

Table A.9 Return boiler to stoker firing - capital investment

Technology: RETURN BOILER TO STOKER FIRING 50-500 MBTU/H

| | |
|---|---|
| Size (MBtu/h) | |
| Output heat = | 100.0 |
| No. of units = | 2 |
| Output/unit = | 50.0 |
| Multiple unit multiplier = | 1.85 |

| ITEM | SCALING FACTOR | COST (K$) |
|---|---|---|
| Site work & foundations | .60 | .0 |
| Boiler modifications | .50 | 20.2 |
| Stoker | .60 | 267.3 |
| Boiler house modification | .50 | .0 |
| Fuel handling & storage | .40 | 675.2 |
| Bottom ash pit system | .40 | 241.5 |
| Ash handling | .40 | 256.1 |
| Electrical | .80 | 44.8 |
| Baghouse | .80 | 388.5 |
| FGD lime spray-dry scrubber | .70 | 850.4 |
| Subtotal | | 2744.0 |
| Indirects (30%) | | 823.2 |
| Contingency (20%) | | 713.4 |
| Total for each unit | | 4280.6 |
| Grand total | | 7919.1 |

Table A.10 Coal/water mixture technology - O&M costs

Technology: COAL/WATER SLURRY BURNER REFIT TO EXISTING BOILER SIZE 30-200 MBTU/H

| | | | |
|---|---|---|---|
| Total heat output (MBtu/h) = | 100.0 | COAL, LIMESTONE, ASH | |
| Number of units converted = | 2 | Ash fraction = | .10 |
| Unit output (MBtu/h) = | 50.0 | S fraction = | .025 |
| Fuel to steam/HTHW eff. = | .75 | HHV (Btu/lb) = | 12000 |
| Capacity factor = | .60 | Ton coal/year = | 29200 |
| Ash disposal price ($/ton) = | 10.00 | Ca/S ratio = | 3.50 |
| Electric price (cents/kWh) = | 5.00 | Inert fraction = | .05 |
| Labor rate (K$/year) = | 35.00 | Ton sorbent/year = | 8405 |
| Limestone price ($/ton) = | 20.00 | Waste/sorbent = | .858 |
| | | Ton ash/year = | 10131 |

| CATEGORY | SCALING FACTOR | COST (K$) |
|---|---|---|
| Direct manpower (f) | .18 | 597.0 |
| Repair labor & materials (f) | .36 | 398.9 |
| Electricity (f) | 1.00 | 56.1 |
| Electricity inc. baghse (v) | 1.00 | 50.5 |
| Baghouse (f) | .36 | 33.6 |
| Limestone (v) | 1.00 | 168.1 |
| Ash disposal (v) | 1.00 | 101.3 |
| Nonfuel O&M total for Coal/$H_2O$ mix. | | 1405.4 |

Table A.11 Coal/water mixture technology - capital investment

Technology: COAL/WATER MIXTURE REFIT 30-200 MBTU/H

Size (MBtu/h)
Output heat = 100.0
No. of units = 2
Output/unit = 50.0
Multiple unit multiplier = 1.85

| ITEM | SCALING FACTOR | COST (K$) |
|---|---|---|
| Site work & foundations | .50 | 10.1 |
| Slurry burners & atomizers | .60 | 60.9 |
| Soot blowers | .60 | 117.1 |
| Tube bank modifications | .60 | 183.0 |
| Fuel handling & storage | .50 | 505.3 |
| Bottom ash pit system | .40 | 241.5 |
| Ash handling | .40 | 435.3 |
| Electrical & piping | .80 | 19.7 |
| Baghouse | .80 | 388.5 |
| Subtotal | | 1961.2 |
| Indirects (30%) | | 588.4 |
| Contingency (20%) | | 509.9 |
| Total for each unit | | 3059.5 |
| Grand total | | 5660.1 |

Table A.12 Coal/oil mixture technology - O&M costs

Technology: COAL/OIL SLURRY BURNER REFIT TO EXISTING BOILER
SIZE 30-200 MBTU/H

| | | | |
|---|---|---|---|
| Total heat output (MBtu/h) = | 100.0 | COAL, LIMESTONE, ASH | |
| Number of units converted = | 2 | Ash fraction = | .045 |
| Unit output (MBtu/h) = | 50.0 | S fraction = | .011 |
| Fuel to steam/HTHW eff. = | .78 | HHV (Btu/lb) = | 12000 |
| Capacity factor = | .60 | Eq. ton coal/year = | 28077 |
| Ash disposal price ($/ton) = | 10.00 | Ca/S ratio = | 3.50 |
| Electric price (cents/kWh) = | 5.00 | Inert fraction = | .05 |
| Labor rate (K$/year) = | 35.00 | Ton sorbent/year = | 3637 |
| Limestone price ($/ton) = | 20.00 | Waste/sorbent = | .858 |
| | | Ton ash/year = | 4384 |

| CATEGORY | SCALING FACTOR | COST (K$) |
|---|---|---|
| Direct manpower (f) | .18 | 573.9 |
| Repair labor & materials (f) | .36 | 310.8 |
| Electricity (f) | 1.00 | 56.1 |
| Electricity inc. baghse (v) | 1.00 | 50.5 |
| Baghouse (f) | .36 | 33.6 |
| Limestone (v) | 1.00 | 72.7 |
| Ash disposal (v) | 1.00 | 43.8 |
| Nonfuel O&M total for Coal/oil mix. | | 1141.4 |

Table A.13 Coal/oil mixture technology
- capital investment

Technology: COAL/OIL MIXTURE REFIT 30-200 MBTU/H

Size (MBtu/h)
Output heat = 100.0
No. of units = 2
Output/unit = 50.0
Multiple unit multiplier = 1.85

| ITEM | SCALING FACTOR | COST (K$) |
|---|---|---|
| Site work & foundations | .50 | 10.1 |
| Slurry burners & atomizers | .60 | 46.8 |
| Soot blowers | .60 | 117.1 |
| Tube bank modifications | .60 | 58.7 |
| Fuel handling & storage | .50 | 474.2 |
| Bottom ash pit system | .40 | 183.0 |
| Ash handling | .40 | 311.3 |
| Electrical & piping | .80 | 19.7 |
| Baghouse | .80 | 388.5 |
| Subtotal | | 1609.4 |
| Indirects (30%) | | 482.8 |
| Contingency (20%) | | 418.5 |
| Total for each unit | | 2510.7 |
| Grand total | | 4644.8 |

Table A.14 Packaged gasifier technology - O&M costs

Technology: PACKAGED GASIFIER FIRING EXISTING BOILER
SIZE 30-70 MBTU/H GAS OUTPUT (25-59 MBTU/H STEAM)

| | | | |
|---|---|---|---|
| Total heat output (MBtu/h) = | 100.0 | COAL, LIMESTONE, ASH | |
| Number of units converted = | 2 | Ash fraction = | .10 |
| Unit output (MBtu/h) = | 50.0 | S fraction = | .020 |
| Fuel to steam/HTHW eff. = | .66 | HHV (Btu/lb) = | 13200 |
| Capacity factor = | .60 | Ton coal/year = | 30229 |
| Ash disposal price ($/ton) = | 10.00 | Ton ash/year = | 3023 |
| Electric price (cents/kWh) = | 5.00 | | |
| Labor rate (K$/year) = | 35.00 | | |

| CATEGORY | SCALING FACTOR | COST (K$) |
|---|---|---|
| Direct manpower (f) | .18 | 689.3 |
| Repair labor & materials (f) | .36 | 398.9 |
| Electricity (f) | 1.00 | 178.7 |
| Electricity (v) | 1.00 | 160.8 |
| Ash disposal (v) | 1.00 | 30.2 |
| $SO_2$ stripping (v) | 1.00 | 316.2 |
| Nonfuel O&M total - no FGD | | 1458.0 |
| Nonfuel O&M total with FGD | | 1774.2 |

Table A.15 Packaged gasifier technology - capital investment

Technology: COAL GASIFIER FIRING EXISTING BOILER STEAM OUTPUT: 59 MBTU/H FOR BITUM., 25 MBTU/H FOR ANTHRACITE.

| | |
|---|---|
| Size (MBtu/h) | |
| Output heat = | 100.0 |
| No. of units = | 2 |
| Output/unit = | 50.0 |
| Multiple unit multiplier = | 1.85 |

| ITEM | SCALING FACTOR | COST (K$) |
|---|---|---|
| Site work & foundations | .50 | 40.4 |
| Boiler modifications | .50 | 20.2 |
| Fixed bed air blown gasifier | .70 | 1301.9 |
| Boiler house modification | .50 | 100.0 |
| Fuel handling & storage | .40 | 713.9 |
| Ash handling | .40 | 268.3 |
| Electrical, piping & ducting | .80 | 149.8 |
| Baghouse | .80 | .0 |
| Gas desulfurization | .70 | 507.2 |
| Subtotal | | 3101.7 |
| Indirects (30%) | | 930.5 |
| Contingency (20%) | | 806.4 |
| Total for each unit | | 4838.7 |
| Grand total | | 8951.5 |

Table A.16 Packaged shell stoker boiler - O&M costs

Technology: PACKAGED SHELL STOKER
SIZE 10-50 MBTU/H

| | | | |
|---|---|---|---|
| Total heat output (MBtu/h) = | 100.0 | COAL, LIME, ASH | |
| Number of units converted = | 2 | Ash fraction = | .10 |
| Unit output (MBtu/h) = | 50.0 | S fraction = | .020 |
| Fuel to steam/HTHW eff. = | .74 | HHV (Btu/lb) = | 13200 |
| Capacity factor = | .60 | Ton coal/year = | 26904 |
| Ash disposal price ($/ton) = | 10.00 | Ca/S ratio = | 1.30 |
| Electric price (cents/kWh) = | 5.00 | Inerts/CaO frac = | .05 |
| Labor rate (K$/year) = | 35.00 | Ton sorbent/year = | 1682 |
| Hydra lime price ($/ton) = | 40.00 | Waste/sorbent = | 1.558 |
| | | Ton ash/year = | 5311 |

| CATEGORY | SCALING FACTOR | COST (K$) |
|---|---|---|
| Direct manpower (f) | .18 | 689.3 |
| Repair labor & materials (f) | .36 | 398.9 |
| Electricity (f) | 1.00 | 56.1 |
| Electricity inc. baghse (v) | 1.00 | 50.5 |
| Baghouse (f) | .36 | 33.6 |
| Hydrated lime (v) | 1.00 | 67.3 |
| Ash disposal (v) | 1.00 | 53.1 |
| FGD system (f) | .40 | 242.9 |
| FGD system (v) | 1.00 | 52.6 |
| Nonfuel O&M total - no FGD | | 1348.7 |
| Nonfuel O&M total with FGD | | 1644.2 |

Table A.17 Packaged shell stoker boiler - capital investment

Technology: PACKAGED SHELL STOKER REPLACEMENT BOILER 10-50 MBTU/H

Size (MBtu/h)
Output heat = 100.0
No. of units = 2
Output/unit = 50.0
Multiple unit multiplier = 1.85

| ITEM | SCALING FACTOR | COST (K$) |
|---|---|---|
| Site work & foundations | .50 | 40.4 |
| Boiler | .50 | 531.0 |
| Boiler house modification | .50 | 142.1 |
| Fuel handling & storage | .40 | 675.2 |
| Ash handling | .40 | 256.1 |
| Electrical, piping & misc. | .80 | 176.1 |
| Baghouse | .80 | 388.5 |
| FGD lime spray-dry scrubber | .70 | 850.4 |
| Subtotal | | 3059.9 |
| Indirects (30%) | | 918.0 |
| Contingency (20%) | | 795.6 |
| Total for each unit | | 4773.4 |
| Grand total | | 8830.8 |

Table A.18 Packaged FBC shell boiler - O&M costs

Technology: PACKAGED FBC SHELL BOILER
SIZE 10-50 MBTU/H

| | | | |
|---|---|---|---|
| Total heat output (MBtu/h) = | 100.0 | COAL, LIMESTONE, ASH | |
| Number of units converted = | 2 | Ash fraction = | .10 |
| Unit output (MBtu/h) = | 50.0 | S fraction = | .025 |
| Fuel to steam/HTHW eff. = | .76 | HHV (Btu/lb) = | 12000 |
| Capacity factor = | .60 | Ton coal/year = | 28816 |
| Ash disposal price ($/ton) = | 10.00 | Ca/S ratio = | 3.00 |
| Electric price (cents/kWh) = | 5.00 | Inert fraction = | .05 |
| Labor rate (K$/year) = | 35.00 | Ton sorbent/year = | 7109 |
| Limestone price ($/ton) = | 20.00 | Waste/sorbent = | .886 |
| | | Ton ash/year = | 9180 |

| CATEGORY | SCALING FACTOR | COST (K$) |
|---|---|---|
| Direct manpower (f) | .18 | 689.3 |
| Repair labor & materials (f) | .36 | 398.9 |
| Electricity (f) | 1.00 | 56.1 |
| Electricity inc. baghse (v) | 1.00 | 65.6 |
| Baghouse (f) | .36 | 33.6 |
| Limestone (v) | 1.00 | 142.2 |
| Ash disposal (v) | 1.00 | 91.8 |
| Nonfuel O&M total | | 1477.4 |

Table A.19 Packaged FBC shell boiler - capital investment

Technology: PACKAGED FBC SHELL BOILER 10-50 MBTU/H

Size (MBtu/h)
Output heat = 100.0
No. of units = 2
Output/unit = 50.0
Multiple unit multiplier = 1.85

| ITEM | SCALING FACTOR | COST (K$) |
|---|---|---|
| Site work & foundations | .50 | 40.4 |
| Boiler | .70 | 1121.0 |
| Boiler house modification | .50 | 142.1 |
| Fuel handling & storage | .40 | 732.6 |
| Ash & sand handling | .40 | 418.4 |
| Electrical, piping & misc. | .80 | 175.6 |
| Baghouse | .80 | 388.5 |
| Subtotal | | 3018.7 |
| Indirects (30%) | | 905.6 |
| Contingency (20%) | | 784.9 |
| Total for each unit | | 4709.2 |
| Grand total | | 8712.1 |

Table A.20 Field erected stoker boiler - O&M costs

Technology: FIELD ERECTED STOKER, 50-500 MBTU/H OUTPUT

| | | | |
|---|---|---|---|
| Output heat (MBtu/h) = | 100.0 | COAL, LIME, ASH | |
| Fuel to steam/HTHW eff. = | .78 | Ash fraction = | .10 |
| Capacity factor = | .60 | S fraction = | .020 |
| Ash disposal price ($/ton)= | 10.00 | HHV (Btu/lb) = | 13200 |
| Electric price (cents/kWh)= | 5.00 | Ton coal/year = | 25524 |
| Labor rate (K$/year) = | 35.00 | Ca/S ratio = | 1.30 |
| Hydra lime price ($/ton) = | 40.00 | Inerts/CaO frac= | .05 |
| | | Ton sorbent/year = | 1596 |
| | | Waste/sorbent = | 1.558 |

| CATEGORY | SCALING FACTOR | COST (K$) |
|---|---|---|
| Direct manpower (f) | .18 | 591.9 |
| Repair labor & materials (f) | .36 | 396.2 |
| Electricity (f) | 1.00 | 49.1 |
| Electricity inc. baghse (v) | 1.00 | 44.2 |
| Baghouse (f) | .36 | 33.6 |
| Hydrated lime (v) | 1.00 | 63.8 |
| Ash disposal (v) | 1.00 | 50.4 |
| FGD system (f) | .40 | 242.9 |
| FGD system (v) | 1.00 | 52.6 |
| Nonfuel O&M total - no FGD | | 1140.4 |
| Nonfuel O&M total with FGD | | 1524.6 |

Table A.21 Field erected stoker boiler - capital investment

Technology: FIELD ERECTED STOKER, 50-500 MBTU/H

Size (MBtu/h)
Output heat = 100.0

| ITEM | SCALING FACTOR | COST (K$) |
|---|---|---|
| Site work & foundations | .60 | 86.5 |
| Boiler | .68 | 2884.2 |
| Stoker | .60 | 405.1 |
| Boiler house | .50 | 531.2 |
| Fuel handling & storage | .40 | 890.3 |
| Ash handling | .40 | 350.2 |
| Electrical & piping | .80 | 306.5 |
| Baghouse | .80 | 676.4 |
| FGD lime spray-dry scrubber | .70 | 1381.5 |
| Subtotal | | 7512.0 |
| Indirects (30%) | | 2253.6 |
| Contingency (20%) | | 1953.1 |
| Total | | 11718.7 |

Table A.22 Field erected bubbling FBC boiler - O&M costs

Technology: FIELD ERECTED BUBBLING FBC, 50-500 MBTU/H OUTPUT

| | | | |
|---|---|---|---|
| Output heat (MBtu/h) = | 100.0 | COAL, LIMESTONE, ASH | |
| Fuel to steam/HTHW eff. = | .80 | Ash fraction = | .10 |
| Capacity factor = | .60 | S fraction = | .025 |
| Ash disposal price ($/ton)= | 10.00 | HHV (Btu/lb) = | 12000 |
| Electric price (cents/kWh)= | 5.00 | Ton coal/year = | 27375 |
| Labor rate (K$/year) = | 35.00 | Ca/S ratio = | 3.00 |
| Limestone price ($/ton) = | 20.00 | Inert fraction = | .05 |
| | | Ton sorbent/year = | 6754 |
| | | Waste/sorbent = | .886 |

| CATEGORY | SCALING FACTOR | COST (K$) |
|---|---|---|
| Direct manpower (f) | .18 | 591.9 |
| Repair labor & materials (f) | .36 | 468.7 |
| Electricity (f) | 1.00 | 56.1 |
| Electricity inc. baghse (v) | 1.00 | 65.6 |
| Baghouse (f) | .36 | 33.6 |
| Limestone (v) | 1.00 | 135.1 |
| Ash disposal (v) | 1.00 | 87.2 |
| Nonfuel O&M total - no FGD | | 1438.0 |

Table A.23 Field erected bubbling FBC boiler - capital investment

Technology: FIELD ERECTED BUBBLING FBC 50-500 MBTU/H

Size (MBtu/h) Output heat = 100.0

| ITEM | SCALING FACTOR | COST (K$) |
|---|---|---|
| Site work & foundations | .60 | 86.5 |
| Boiler | .68 | 3940.3 |
| Boiler house | .50 | 531.2 |
| Fuel handling & storage | .40 | 965.1 |
| Ash handling | .40 | 350.2 |
| Electrical & piping | .80 | 306.5 |
| Baghouse | .80 | 676.4 |
| Subtotal | | 6856.3 |
| Indirects (30%) | | 2056.9 |
| Contingency (20%) | | 1782.6 |
| Total | | 10695.8 |

Table A.24 Field erected pulverized coal boiler - O&M costs

Technology: FIELD ERECTED PULVERIZED COAL, 50-500 MBTU/H OUTPUT

| | | | |
|---|---|---|---|
| Output heat (MBtu/h) = | 100.0 | COAL, LIME, ASH | |
| Fuel to steam/HTHW eff. = | .80 | Ash fraction = | .10 |
| Capacity factor = | .60 | S fraction = | .025 |
| Ash disposal price ($/ton)= | 10.00 | HHV (Btu/lb) = | 12000 |
| Electric price (cents/kWh)= | 5.00 | Ton coal/year = | 27375 |
| Labor rate (K$/year) = | 35.00 | Ca/S ratio = | 1.30 |
| Hydra lime price ($/ton) = | 40.00 | Inerts/CaO frac= | .05 |
| | | Ton sorbent/year = | 2139 |
| | | Waste/sorbent = | 1.558 |

| CATEGORY | SCALING FACTOR | COST (K$) |
|---|---|---|
| Direct manpower (f) | .18 | 631.3 |
| Repair labor & materials (f) | .36 | 473.9 |
| Electricity (f) | 1.00 | 49.1 |
| Electricity inc. baghse (v) | 1.00 | 59.9 |
| Baghouse (f) | .36 | 33.6 |
| Hydrated lime (v) | 1.00 | 85.6 |
| Ash disposal (v) | 1.00 | 60.7 |
| FGD system (f) | .40 | 242.9 |
| FGD system (v) | 1.00 | 52.6 |
| Nonfuel O&M total - no FGD | | 1275.2 |
| Nonfuel O&M total with FGD | | 1689.6 |

Table A.25 Field erected pulverized coal boiler - capital investment

Technology: PULVERIZED COAL, 50-500 MBTU/H

Size (MBtu/h)
Output heat = 100.0

| ITEM | SCALING FACTOR | COST (K$) |
|---|---|---|
| Site work & foundations | .60 | 86.5 |
| Boiler | .68 | 3509.6 |
| Pulverizers | .60 | 808.3 |
| Boiler house | .50 | 531.2 |
| Fuel handling & storage | .40 | 890.3 |
| Ash handling | .40 | 350.2 |
| Electrical & piping | .80 | 306.5 |
| Baghouse | .80 | 676.4 |
| FGD lime spray-dry scrubber | .70 | 1381.5 |
| Subtotal | | 8540.6 |
| Indirects (30%) | | 2562.2 |
| Contingency (20%) | | 2220.5 |
| Total | | 13323.3 |

Table A.26 Circulating FBC boiler - O&M costs

Technology: FIELD ERECTED CIRCULATING FBC BOILER, 50-500 MBTU/H OUTPUT

| | | | |
|---|---|---|---|
| Output heat (MBtu/h) = | 100.0 | COAL, LIMESTONE, ASH | |
| Fuel to steam/HTHW eff. = | .81 | Ash fraction = | .10 |
| Capacity factor = | .60 | S fraction = | .025 |
| Ash disposal price ($/ton)= | 10.00 | HHV (Btu/lb) = | 12000 |
| Electric price (cents/kWh)= | 5.00 | Ton coal/year = | 27037 |
| Labor rate (K$/year) = | 35.00 | Ca/S ratio = | 2.00 |
| Limestone price ($/ton) = | 20.00 | Inert fraction = | .05 |
| | | Ton sorbent/year = | 4447 |
| | | Waste/sorbent = | .988 |

| CATEGORY | SCALING FACTOR | COST (K$) |
|---|---|---|
| Direct manpower (f) | .18 | 631.3 |
| Repair labor & materials (f) | .36 | 396.2 |
| Electricity (f) | 1.00 | 49.0 |
| Electricity inc. baghse (v) | 1.00 | 107.3 |
| Baghouse (f) | .36 | 33.6 |
| Limestone (v) | 1.00 | 88.9 |
| Ash disposal (v) | 1.00 | 71.0 |
| Nonfuel O&M total | | 1377.3 |

Table A.27 Circulating FBC boiler - capital investment

Technology: CIRCULATING FBC, 50-500 MBTU/H

Size (MBtu/h)
Output heat = 100.0

| ITEM | SCALING FACTOR | COST (K$) |
|---|---|---|
| Site work & foundations | .60 | 86.5 |
| Boiler | .74 | 5312.2 |
| New boiler house | .50 | 664.0 |
| Fuel handling & storage | .40 | 953.6 |
| Ash handling | .40 | 350.2 |
| Electrical & piping | .80 | 306.5 |
| Baghouse | .80 | 676.4 |
| Subtotal | | 8349.4 |
| Indirects (30%) | | 2504.8 |
| Contingency (20%) | | 2170.9 |
| Total | | 13025.1 |

given by the computer spreadsheets do not adhere to rules for significant figures, because such adherence would greatly complicate the programming.

For most of the technologies there are two cost spreadsheets, one to estimate yearly O&M costs and one to estimate capital investment requirements. The one exception to this is the slagging combustor technology, which uses the O&M cost estimate made for the micronized coal system; therefore there is no separate O&M spreadsheet specifically tailored for slagging combustor technology. Not enough information is currently available to estimate operating cost differences between the two technologies.

A few items on the top portion of the spreadsheet tables are technology-specific input parameters that need to be discussed. Many of the parameters from the input file spreadsheet (Table A.2) are repeated on each O&M spreadsheet. In addition to these, the fuel-to-steam efficiency is defined, and parameters are included to define limestone needs and ash-disposal requirements.

Table A.3 is the O&M cost spreadsheet for micronized coal refit technology and has input parameters typical of most of the coal technologies. The fuel-to-steam efficiency listed is defined as the ratio of net heat output energy to input fuel heating content (based on higher heating value). This ratio is intended to represent a yearly average. The Ca/S ratio (calcium to sulfur ratio) defines the required mole ratio of calcium in the limestone or lime to the amount of sulfur present in the coal. The values listed for yearly use of coal and limestone and yearly production of ash (coal ash and spent sorbent) are calculated from the other values given. Another new input parameter is waste/sorbent, which is the mass ratio of waste produced from the sorbent (lime or limestone) to the input sorbent. This ratio has been calculated outside the computer program and depends on the technology-specific chemical changes expected to take place.

A size range is given for each technology and is listed as 10 to 200 MBtu/h for the micronized coal technology spreadsheets (Tables A.3 and A.4). These size ranges listed indicate the size range possible for

a single unit (combustor train or boiler) of the given technology. For the field-erected boiler technologies (Tables A.20 to A.27), the maximum size is given as 500 MBtu/h output steam. This represents the upper range for which the cost equations were developed, rather than the technology limit. Also, boilers beyond 500-MBtu/h output capacity are not of interest to this study.

The spreadsheets for capital cost estimation have two input parameters that need to be explained. In Table A.4 a value is given for the number of units (two in this case). The number of units is calculated by considering the size limits of the technology and the existing boilers to be converted. When multiple units are to be employed, a cost factor is used that is listed as the "multiple unit multiplier." The total capital cost for a single unit is calculated and then multiplied by this factor to obtain the project capital cost. In the cost model presented here, it is assumed that a second unit costs 85% as much as the first unit, and any additional units cost the same as the second unit. This "discount" is thought to be realistic based on experience with multiple-packaged boiler units. This same factor is applied to all technologies other than the field-erected boilers.

The two parameters discussed in the previous paragraph are not applied to field-erected boiler installations. The computer program makes no provision for multiple field-erected boiler projects. Evaluation of such a project could be accomplished using this cost model with some additional calculations.

All of the technology cost spreadsheets have a column labeled "scaling factor" in the itemized-cost table portion. In general, the cost of an item is scaled by the size (output heat rating) of the boiler system. The scaling factors are the exponent of the power function used to calculate cost as described previously.

The spreadsheet shown in Table A.28 was developed to estimate O&M costs for packaged oil and natural gas-fired boilers. Comparisons can then be made between the costs for installing coal technologies and continued firing of gas or oil in existing heating plants. These costs should also be typical of field-erected oil and gas boilers or coal

Table A.28 Packaged oil/gas boiler - O&M costs

Technology: PACKAGED OIL/GAS BOILER
SIZE 10-200 MBTU/H

Total heat output (MBtu/h) = 100.0
Fuel to steam/HTHW eff. = .80
Capacity factor = .60

Labor rate (K$/year) = 35.00
Elec. price (cents/kWh)= 5.00

| CATEGORY | SCALING FACTOR | COST (K$) |
|---|---|---|
| Direct manpower (f) | .21 | 481.2 |
| Repair labor & materials (f) | .55 | 232.9 |
| Electricity (f) | 1.00 | 32.1 |
| Electricity (v) | 1.00 | 44.9 |
| Nonfuel O&M total | | 791.0 |

boilers that were converted to oil/gas firing. Exceptions to this may occur for boilers in poor condition that need more maintenance than usual.

It also should be mentioned that O&M costs do vary somewhat with fuel. For example, distillate oil firing may require slightly more maintenance than gas firing because of the oil delivery, storage, and pumping systems. Similarly, residual oil firing will require more O&M cost than either gas or distillate oil. Because these differences are relatively minor, the O&M costs are treated as identical to simplify the program.

### A.4.3 Summary Spreadsheet

A summary spreadsheet is included at the end of the cost model that compares the costs of simulated projects using each technology. Results for the example case are shown in Table A.29. These results can be used as input into a life-cycle cost model or other evaluation model to compare options.

Table A.29 Computer program results - summary spreadsheet

2 X 50 MBTU/H, REFIT/REPLACEMENT, WITH $SO_2$ CONTROL: TEST CASE
Heating system size = 100.0 MBTU/h
Heating system cap. factor= .60
Number of units for refit = 2 Primary fuel is NATURAL GAS

| TECHNOLOGY | FUEL/ STEAM EFF. | NO. OF UNITS | TOTAL CAPITAL (K$) | ANNUAL O & M (K$) | ANNUAL FUEL (K$) |
|---|---|---|---|---|---|
| Micronized coal refit | .80 | 2 | 5584.8 | 1555.2 | 985.5 |
| Slagging comb. | .80 | 2 | 8944.0 | 1555.2 | 985.5 |
| BFBC add-on unit | .79 | 2 | 10085.6 | 1468.5 | 998.0 |
| Stoker firing refit | .74 | 2 | 7919.1 | 1644.2 | 1243.0 |
| Coal/water slurry | .75 | 2 | 5660.1 | 1405.4 | 2102.4 |
| Coal/oil slurry | .78 | 2 | 4644.8 | 1141.4 | 2358.5 |
| Low Btu gasifier | .66 | 2 | 8951.5 | 1774.2 | 1396.6 |
| Packaged shell stoker | .74 | 2 | 8830.8 | 1644.2 | 1243.0 |
| Packaged shell FBC | .76 | 2 | 8712.1 | 1477.4 | 1037.4 |
| Field erected stoker | .78 | 1 | 11718.7 | 1524.6 | 1179.2 |
| Field erected FBC | .80 | 1 | 10695.8 | 1438.0 | 985.5 |
| Pulverized coal boiler | .80 | 1 | 13323.3 | 1689.6 | 985.5 |
| Circulating FBC | .81 | 1 | 13025.1 | 1377.3 | 973.3 |
| Natural gas boiler | .80 | EXISTING SYSTEM | | 791.0 | 2299.5 |
| #2 oil fired boiler | .80 | EXISTING SYSTEM | | 791.0 | 3094.5 |
| #6 oil fired boiler | .80 | EXISTING SYSTEM | | 791.0 | 2411.2 |

## REFERENCES


1. E. T. Pierce, E. C. Fox, and J. F. Thomas, *Fuel Burning Alternatives for the Army*, Interim Report E-85/04, Construction Engineering Research Laboratory, U.S. Army Corps of Engineers, Champaign, Ill., January 1985.

2. S. C. Kurzius and R. W. Barnes, *Coal-Fired Boiler Costs for Industrial Applications*, ORNL/CON-67, Martin Marietta Energy Systems, Inc., Oak Ridge Natl. Lab., April 1982.

3. O. H. Klepper et al., *A Comparative Assessment of Industrial Boiler Options Relative to Air Emission Regulations*, ORNL/TM-8144, Martin Marietta Energy Systems, Inc., Oak Ridge Natl. Lab., July 1983.

4. R. S. Holcomb and M. Prior, *The Economics of Coal for Steam Raising in Industry*, ICEAS/H4, IEA Coal Research, London, U.K., April 1985.

5. E. T. Pierce et al., *Fuels Selection Alternatives for Army Facilities*, Technical Report E-86/03, Construction Engineering Research Laboratory, U.S. Army Corps of Engineers, Champaign, Ill., December 1986.

6. J. F. Thomas, E. C. Fox, and W. K. Kahl, *Small- to Medium-Size Coal Plants: Description and Cost Information for Boilers and Pollution Control Equipment*, internal report, Martin Marietta Energy Systems, Inc., Oak Ridge Natl. Lab., March 1982.

7. S. P. N. Singh et al., *Costs and Technical Characteristics of Environmental Control Processes for Low-Btu Coal Gasification Plants*, ORNL-5425, Martin Marietta Energy Systems, Inc., Oak Ridge Natl. Lab., June 1980.

8. J. F. Thomas and R. W. Gregory, *The Cost of Coal-Fired Atmospheric Fluidized Bed Boilers for Industry*, IEA Coal Research, London, U.K., to be published.

9. B. D. Coffin, "Estimating Capital and Operating Costs for Industrial Steam Plants," *Power* **123**(4), 47–48 (October 1984).

10. PEDCo Environmental, Inc., *Cost Equations for Industrial Boilers, U.S. Environmental Protection Agency*, Economic Analysis Branch, Research Triangle Park, N.C., January 1980.

11. R. C. Lutwen and T. J. Fitzpatrick, *A Comparison of Circulating Fluid Bed, Bubbling Fluid Bed, Pulverized Coal and Spreader Stoker Power Plants*, 23rd Annual Kentucky Industrial Coal Conference, Lexington, Ky., April 11, 1984.

12. S. B. Farbstein and T. Moreland, *Circulating Fluidized Bed Combustion Project*, pp. 821–32 in Proceeding of the 6th Annual Industrial Energy Conservation Technology Conference, Vol. II, Houston, Tex., April 15, 1984.

13. A. E. Marguiles (principal investigator), Stone & Webster Engineering Corporation, *Economic Evaluation of Microfine Coal-Water Slurry*, EPRI CS-4975, Electric Power Research Institute, Palo Alto, Calif., December 1986.

14. D. Thimsen et al., *Fixed-Bed Gasification Research Using U.S. Coals, Volume 19, Executive Summary*, U.S. Department of Interior, Bureau of Mines, Minneapolis, Minn., December 1985.

15. "Economic Indicators," *Chem. Eng.* **95**(10), 9 (July 18, 1988).

16. A. R. Snow, TAS-Systems, Magna, Utah, personal communications to J. F. Thomas, Martin Marietta Energy Systems, Inc., Oak Ridge Natl. Lab., December 11, 1986, July 27, 1987, and other dates.

17. T. Lanager, TCS, Inc., Washington, D.C., personal communication to J. F. Thomas, Martin Marietta Energy Systems, Inc., Oak Ridge Natl. Lab., September 13, 1988.

18. J. Bicki, St. Louis University Hospital, St Louis, Mo., personal communication to J. F. Thomas, Martin Marietta Energy Systems, Inc., Oak Ridge Natl. Lab., September 13, 1988.

19. L. Bradshaw, Idaho Supreme Potatoes Inc., Firth, Idaho, personal communication to J. F. Thomas, Martin Marietta Energy Systems, Inc., Oak Ridge Natl. Lab., March 4, 1988.

20. L. D. Borman, Micro Fuels Corp., Ely, Iowa, personal communication to J. F. Thomas, Martin Marietta Energy Systems, Inc., Oak Ridge Natl. Lab., March 16, 1988.

21. A. Wiley, Micro Fuels Corp., Ely, Iowa, personal communication to J. F. Thomas, Martin Marietta Energy Systems, Inc., Oak Ridge Natl. Lab., March 22, 1989.

22. R. E. Viani, TRW Inc., Redondo Beach, Calif., personal communications to J. F. Thomas, Martin Marietta Energy Systems, Inc., Oak Ridge Natl. Lab., December 10, 1986, and February 4, 1987.

23. R. S. Sadowski, Wormser Engineering, Inc., Woburn, Maine, personal communication to J. F. Thomas, Martin Marietta Energy Systems, Inc., Oak Ridge Natl. Lab., June 27, 1986.

24. D. L. Swanda, Deltak Corp., Minneapolis, Minn., personal communication to J. F. Thomas, Martin Marietta Energy Systems, Inc., Oak Ridge Natl. Lab., March 16, 1988.

25. C. Rice, Kraft Food Ingredients Corp., (Anderson Clayton Foods), Jacksonville, Ill., personal communication to J. F. Thomas, Martin Marietta Energy Systems, Inc., Oak Ridge Natl. Lab., September 1988.

26. D. V. Keller, Otisca Industries, Ltd., Syracuse, N.Y., personal communication to J. F. Thomas, Martin Marietta Energy Systems, Inc., Oak Ridge Natl. Lab., April 14, 1988.

27. D. C. Fuller, CoaLiquid, Inc., Louisville, Ky., personal communication to J. F. Thomas, Martin Marietta Energy Systems, Inc., Oak Ridge Natl. Lab., May 13, 1987.

28. R. E. Maurer, Black, Sivalls & Bryson, Inc., Houston, Tex., personal communication to J. F. Thomas, Martin Marietta Energy Systems, Inc., Oak Ridge Natl. Lab., November 14, 1986.

29. H. Campbell, Dravo-Wellman Co., Pittsburgh, Pa., personal communication to J. F. Thomas, Martin Marietta Energy Systems, Inc., Oak Ridge Natl. Lab., December 4, 1986.

30. R. Shedd, Stone Johnston Corp., Ferrysburg, Mich., personal communication to J. F. Thomas, Martin Marietta Energy Systems, Inc., Oak Ridge Natl. Lab., January 23, 1986.

31. Campbell Soup Company, Camden, N.J., personal communication to J. F. Thomas, Martin Marietta Energy Systems, Inc., Oak Ridge Natl. Lab., January 28, 1986.

32. S. B. Farbstein, Cleveland, Ohio, private consultant to B. F. Goodrich Chemical Group, personal communication to J. F. Thomas, Martin Marietta Energy Systems, Inc., Oak Ridge Natl. Lab., January 28, 1986.

33. H. W. Brown, Birmingham, Ala., Pyropower Corporation, personal communication to J. F. Thomas, Martin Marietta Energy Systems, Inc., Oak Ridge Natl. Lab., February 1986.

34. J. A. Quinto, Combustion Engineering Inc., Windsor, Conn., personal communication to J. F. Thomas, Martin Marietta Energy Systems, Inc., Oak Ridge Natl. Lab., June 25, 1986.

## Internal Distribution

1. D. W. Burton
2. E. C. Fox
3. J. A. Getsi
4-8. F. P. Griffin
9. R. S. Holcomb
10. J. E. Jones Jr.
11. C. R. Kerley
12. R. M. Schilling
13-17. J. F. Thomas
18. V. K. Wilkinson
19-21. J. M. Young
22. ORNL Patent Section
23. Central Research Library
24. Document Reference Section
25-26. Laboratory Records Department
27. Laboratory Records (RC)

## External Distribution

28-67. Freddie L. Beason, HQ Air Force Engineering and Services Center/DEMM, Tyndall Air Force Base, FL 32403-6001
68-77. Defense Technical Information Center, Cameron Station, Alexandria, VA 22314
78. Office of Assistant Manager for Energy Research and Development, Department of Energy, ORO, Oak Ridge, TN 37831
79-87. Office of Scientific and Technical Information, P.O. Box 62, Oak Ridge, TN 37831