MARTIN MARIETTA ENERGY SYSTEMS LIBRARIES

3 4456 0329396 9

ORNL-6541/V2/P2

ornl

OAK RIDGE NATIONAL LABORATORY

MARTIN MARIETTA

Energy Technology R&D: What Could Make a Difference?

A Study by the Staff of
Oak Ridge National Laboratory

Volume 2

Part 2 of 3

Supply Technology

W. Fulkerson, Study Leader
D. B. Reister, Coordinator
J. T. Miller, Editor

OAK RIDGE NATIONAL LABORATORY
CENTRAL RESEARCH LIBRARY
CIRCULATION SECTION
4500N ROOM 175
LIBRARY LOAN COPY
DO NOT TRANSFER TO ANOTHER PERSON
If you wish someone else to see this report, send in name with report and the library will arrange a loan.
ORNL-110 (6-87)

OPERATED BY
MARTIN MARIETTA ENERGY SYSTEMS, INC.
FOR THE UNITED STATES
DEPARTMENT OF ENERGY

This report has been reproduced directly from the best available copy.

Available to DOE and DOE contractors from the Office of Scientific and Technical Information, P.O. Box 62, Oak Ridge, TN 37831; prices available from (615) 576-8401, FTS 626-8401.

Available to the public from the National Technical Information Service, U.S. Department of Commerce, 5285 Port Royal Rd., Springfield, VA 22161.
NTIS price codes: Printed Copy: A09 Microfiche A01

This report was prepared as an account of work sponsored by an agency of the United States Government. Neither the United States Government nor any agency thereof, nor any of their employees, makes any warranty, express or implied, or assumes any legal liability or responsibility for the accuracy, completeness, or usefulness of any information, apparatus, product, or process disclosed, or represents that its use would not infringe privately owned rights. Reference herein to any specific commercial product, process, or service by trade name, trademark, manufacturer, or otherwise, does not necessarily constitute or imply its endorsement, recommendation, or favoring by the United States Government or any agency thereof. The views and opinions of authors expressed herein do not necessarily state or reflect those of the United States Government or any agency thereof.

ORNL-6541/V2/P2

Energy Division

ENERGY TECHNOLOGY R&D: WHAT COULD MAKE A DIFFERENCE?

A Study by the Staff of Oak Ridge National Laboratory

Volume 2

Part 2 of 3: **SUPPLY TECHNOLOGY**

William Fulkerson, Study Leader
David B. Reister, Coordinator
Jacqueline T. Miller, Editor

Date Published–December 1989

OAK RIDGE NATIONAL LABORATORY
Oak Ridge, Tennessee 37831-6285
operated by
MARTIN MARIETTA ENERGY SYSTEMS, INC.
for the
U.S. DEPARTMENT OF ENERGY
under Contract No. DE-AC05-84OR21400

MARTIN MARIETTA ENERGY SYSTEMS LIBRARIES

3 4456 0329396 9

CONTENTS

Part 2 of 3

Page

LIST OF FIGURES vii

LIST OF TABLES ix

ABBREVIATIONS, ACRONYMS, AND INITIALISMS xi

ABSTRACT xxi

INTRODUCTION xxiii

2. SUPPLY TECHNOLOGY 1

2.1 FOSSIL ENERGY 1
2.1.1 Introduction 1
2.1.2 Oil and Gas Resources 1
2.1.2.1 U.S. energy situation 1
2.1.2.2 Oil resources 2
2.1.2.3 Gas resources 4
2.1.2.4 Unconventional oil 5
2.1.2.5 Unconventional gas 8
2.1.2.6 Enhanced oil recovery 10
2.1.2.7 Conclusions 11
2.1.3 Oil and Gas R&D 12
2.1.3.1 Conventional oil and gas 12
2.1.3.2 Unconventional oil 15
2.1.3.3 Unconventional natural gas 16
2.1.4 Oil shale 18
2.1.5 Coal 20
2.1.5.1 Coal resources 20
2.1.5.2 Coal gasification emerging technologies and R&D needs . 21
2.1.5.3 Coal liquefaction 33
2.1.5.4 Flue-gas desulfurization 36
2.1.6 Advanced Conversion 41
2.1.6.1 Aeroderived gas turbines 41
2.1.6.2 Kalina cycle 46
2.1.6.3 Magnetohydrodynamics 47
2.1.7 References for Section 2.1 48

2.2 FISSION—A NEW AGENDA FOR THE CIVILIAN REACTOR PROGRAM 51
2.2.1 Energy Policy: Planning vs Drifting 51
2.2.2 New Directions for National Nuclear Energy Policy 52
2.2.3 Derive Maximum Benefits from Existing and Advanced LWR Technology 53
2.2.3.1 Improve operational performance 53
2.2.3.2 A new generation of advanced LWRs 55
2.2.4 Demonstrate Modular High-Temperature Gas-Cooled Reactor . . . 56
2.2.5 R&D for the Long Term 57
2.2.6 Civilian Reactor Program Budget 59
2.2.7. References for Section 2.2 59

2.3 FUSION ENERGY 63
2.3.1 Magnetic Confinement Fusion 65
2.3.2 Inertial Confinement Fusion 69
2.3.3 OTA Review of Magnetic Fusion Research—Overview 73
2.3.4 References for Section 2.3 76

2.4 RENEWABLES 77
2.4.1 Hydroelectric Generation 77
2.4.1.1 Current and projected resources 77
2.4.1.2 Constraints to hydropower development 79
2.4.1.3 Research that could make a difference 80
2.4.1.4 References for Section 2.4.1 81
2.4.2 Biomass Energy 82
2.4.2.1 Introduction 82
2.4.2.2 Biomass production 84
2.4.2.3 Conversion 92
2.4.2.4 Discussion and conclusion 93
2.4.2.5 Assumptions and justification for feedstock energy potential 95
2.4.2.6 Evaluation tables 99
2.4.2.7 References for Section 2.4.2 99
2.4.3 Solar Thermal Energy 104
2.4.4 Municipal Waste Disposal and Recycling 106
2.4.5 Photovoltaic Technology 109
2.4.5.1 Introduction 109
2.4.5.2 High-efficiency solar cells 110
2.4.5.3 Nonconcentrating and concentrating systems 112
2.4.5.4 The concentrator option 113
2.4.5.5 Flat-plate systems 117
2.4.5.6 Performance, projections, and research opportunities 119
2.4.5.7 System and economic considerations 123
2.4.5.8 Summary 126

2.4.6 Wind as a Renewable Energy Resource 128
2.4.6.1 Summary 128
2.4.6.2 Introduction 128
2.4.6.3 Wind resources 132
2.4.6.4 Update on wind turbine technology 133
2.4.6.5 Wind power station technology 135
2.4.6.6 Institutional and environmental issues 136
2.4.6.7 Federal Wind Research and Development Program 136
2.4.6.8 The EPRI research focus 141
2.4.6.9 The U.S. wind power market 145
2.4.6.10 References for Section 2.4.6 147
2.4.7. Geothermal Energy 147
2.4.7.1 Introduction 147
2.4.7.2 Resource base 150
2.4.7.3 Potential research areas for geothermal development 151
2.4.7.4 Geothermal research summary 153
2.4.7.5 Bibliography for Section 2.4.7 153
2.4.8 Ocean Thermal Energy Conversion 153
2.4.8.1 Introduction 153
2.4.8.2 Summary 155
2.4.8.3 References for Section 2.4.8 156

LIST OF FIGURES

Page

2.1-1. Cumulative production, identified reserves, and undiscovered resources of crude oil for the world 3

2.1-2. Cumulative production, identified reserves, and undiscovered resources of natural gas for the world 6

2.1-3. World oil and gas resources 6

2.1-4. World resources of conventional and unconventional crude oil 7

2.1-5. World resources of heavy oil 8

2.1-6. World resources of bitumen 9

2.1-7. World resources of oil shale 10

2.1-8. Estimate of the enhanced oil recovery resource 11

2.1-9. Solid wastes for various energy forms 19

2.3-1. Conceptual design of a fusion reactor 66

2.3-2. The U.S. experimental program strategy in magnetic fusion 68

2.4-1. Energy flow and cost categories in a biofuels pathway using (herbaceous and wood) energy crops 89

2.4-2. Simple solar cell structure 111

2.4-3. Schematic diagram of a microgrooved passivated emitter solar cell 114

2.4-4. A cross section of a region in the solar cell near one of the Al bussbars 116

2.4-5. Flat-plate systems cell types 117

2.4-6. A horizontal-axis wind turbine 129

2.4-7. A vertical-axis wind turbine 130

2.4-8. U.S. annual average wind power 134

2.4-9. Schedule for the development and test of variable-speed wind power 145

LIST OF TABLES

		Page
2.1-1.	World resources of crude oil	2
2.1-2.	World resources of natural gas	5
2.1-3.	World resources of heavy oil	7
2.1-4.	World resources of tar sands and oil shale	9
2.1-5.	Recoverable reserves of coal	21
2.1-6.	Important characteristics of generic types of gasification reactors	22
2.1-7.	Status of gasifiers being demonstrated for gasification combined cycle	27
2.1-8.	Generic classification of available gasification technologies	28
2.1-9.	Equivalent energy recovery of fuel gas plants	31
2.1-10.	Gasification combined cycle performance	32
2.1-11.	Direct liquefaction pilot plants	34
2.2-1.	Near-term budget recommendations for the Civilian Reactor Program	60
2.3-1.	Fusion reactions	63
2.3-2.	Tokamak physics achievements	67
2.3-3.	Technology elements	69
2.3-4.	Development areas	72
2.4-1.	Current and potential energy production from the renewable energy technologies	78
2.4-2.	Hydroelectric technology data	82
2.4-3.	Potential costs, amount, and yields from various biofuel feedstocks	85

LIST OF TABLES (continued)

Page

2.4-4. Energy balance analysis of energy crop production 87

2.4-5. Biomass efficiency 88

2.4-6. Necessary relationship between short- and long-term priorities in supporting long-term biomass research 90

2.4-7. Rating against scenarios 100

2.4-8. Desirable characteristics of an energy system 101

2.4-9. Currently achieved efficiencies of various types of laboratory cells 120

2.4-10. Research and development tasks 122

2.4-11. Solar photovoltaics as a fuel saver 124

2.4-12. A stand-alone solar system consisting of photovoltaics plus battery storage plus a high-efficiency combined-cycle gas turbine for backup (e.g., for rainy days) 125

2.4-13. MOD-2 and MOD-5B experimental wind turbine specifications 139

2.4-14. Budget for the federal Wind Energy Program 140

2.4-15. Milestones, schedule, and cumulative budgetary cost estimates 144

2.4-16. Aggregate installed wind turbine rating in U.S. wind power stations, 1986-87, by manufacturer and country of origin 146

ABBREVIATIONS, ACRONYMS, AND INITIALISMS

a	amorphous
A	ampere
ac	alternating current
acfm	actual cubic feet per minute
ACH	air changes per hour
ACRI	Air-Conditioning and Refrigeration Institute
ACSR	aluminum cable steel reinforced
ACTO	Advanced Control Technology Operation
AFBC	atmospheric fluidized bed combustion
AFC	alkaline fuel cell
AGNS	Allied General Nuclear Services
AHAM	Association of Home Appliance Manufacturers
AISI	American Iron and Steel Institute
Al	aluminum
Al_2O_3	aluminum oxide
Al_2S_3	aluminum sulfide
$AlCl_3$	aluminum chloride
Alcoa	Aluminum Company of America
ALWR	advanced light-water reactor
AM	air mass
ANL	Argonne National Laboratory
AR	antireflection (coating)
AR&TD	Advanced Research and Technology Development
ASES	American Solar Energy Society
ASHRAE	American Society of Heating, Refrigerating and Air-Conditioning Engineers
a-Si	amorphous silicon
ASIC	application-specific integrated circuit
ASME	American Society of Mechanical Engineers
ASTM	American Society for Testing and Materials
atm	atmosphere
AVLIS	Atomic Vapor Laser Isotope Separation
AWEA	American Wind Energy Association
B	boron
BB	billion barrels
bbl	barrel
bbl/d	barrels per day
BES	basic energy science
BG	British Gas Corporation
BG/SL	British Gas Slagging Lurgi
BP	British Petroleum
BPA	Bonneville Power Administration
BSFC	brake-specific fuel consumption
Btu	British thermal unit

BTX	benzene-toluene-xylene
c	crystalline
C	Celsius (or Centigrade)
CAD	computer-aided design
CAE	computer-aided engineering
CaO	calcium oxide
Ca/S	calcium/sulfur
$CaSO_4$	calcium sulfate
CCV	control combustion Venturi
CDIF	Component Development and Integration Facility
CdTe	cadmium telluride
CEO	chief executive officer
CESAR	Center for Engineering Systems Advance Research
CFC	chlorofluorocarbon
CFFF	Coal-Fired Flow Facility
CH_4	methane
CIM	computer-integrated manufacturing
CIT	Compact Ignition Tokomak
Cl	chlorine
cm	centimeter
cm^2	square centimeter
cm^3	cubic centimeter
CNG	compressed natural gas
CO	carbon monoxide
CO_2	carbon dioxide
CO/H_2	carbon monoxide/hydrogen
CO_2/H_2	carbon dioxode/hydrogen
COE	cost of electricity
COP	coefficient of performance
CPI	chemical process industry
CRBRP	Clinch River Breeder Reactor Plant
c-Si	crystalline silicon
$CuInSe_2$	copper indium diselenide
CVT	continuously variable transmission
CWA	Clean Water Act of 1977
CWCGP	Cool Water Coal Gasification Project
d	day
D	deuterium
dc	direct current
DDT	dichlorodiphenyl-trichloroethane
DEMO	demonstration reactor
DHC	district heating and cooling
DHW	domestic hot water
diam	diameter
DIII-D	Doublet III-D Tokomak
DIS	Doane Information Service
DISC	direct injection stratified charge (engine)

DNA	deoxyribonucleic acid
DOC	U.S. Department of Commerce
DOD	U.S. Department of Defense
DOE	U.S. Department of Energy
EAD	electroacoustic dewatering
ECPA	Electric Consumers Protection Act of 1986
ECUT	Energy Conversion and Utilization Technology
EER	energy efficiency ratio
EJ	exajoule
emf	electromagnetic force
EMCS	energy management control system
EMS	energy management system
EMT	energy management technology
EMU	Energy Management and Utilization Division (of EPRI)
EOR	enhanced oil recovery
EPA	Environmental Protection Agency
EPRI	Electric Power Research Institute
ERAB	Energy Research Advisory Board
ERS	Economic Research Service
ESP	electrostatic precipitator
ETR	Engineering Test Reactor
EV	electric vehicle
FBC	fluidized bed combustion
FCC	fluid catalytic cracking
FDA	U.S. Food and Drug Administration
Fe	iron
FERC	Federal Energy Regulatory Commission
FeS	iron sulfide
FeS_2	iron disulfide
FGD	flue gas desulfurization
FMS	flexible manufacturing system
FRG	Federal Republic of Germany
FSI	furnace sorbent injection
ft	foot (feet)
ft^3	cubic foot (feet)
FY	fiscal year
FZ	float zoned
g	gram
GA	General Atomic
GaAs	gallium arsenide
gal	gallon
GAO	General Accounting Office
GCC	gasification combined cycle
Ge	germanium
GE	General Electric
GHz	gigahertz
GJ	gigajoule

gm	gigameter
GNP	gross national product
GPCGP	Great Plains Coal Gasification Plant
GRI	Gas Research Institute
GT	gigatonne
GTID	geologically targeted infield drilling
GTO	gate turn-off thyristor
GW	gigawatt
^3H	tritium
h	hour
H_2	hydrogen
H_2O	water
H_2S	hydrogen sulfide
ha	hectare
HAWT	horizontal-axis wind turbine
HEDL	Hanford Engineering Development Laboratory
HEI	Hawaiian Electric Industries, Inc.
Hg	mercury
HHV	higher heating value
HID	high-intensity discharge
HNEI	Hawaii Natural Energy Institute
HP	heat pump
HPAS	Hybrid Pollution Abatement System
HPO	high phase order
HTML	High Temperature Materials Laboratory
hv	high voltage
HVAC	1. heating, ventilating, and air conditioning 2. high-voltage alternating current
HVDC	high-voltage direct current
HVIC	high-voltage integrated circuit
HX	heat exchanger
Hz	hertz
I_2	iodine
IBM	International Business Machines
IC	1. integrated circuit 2. internal combustion
ICE	internal combustion engine
ICF	inertial confinement fusion
IEA	1. Institute of Energy Analysis 2. International Energy Agency
IEEE	Institute of Electrical and Electronics Engineers
IGT	insulated gate transistor
INEL	Idaho National Engineering Laboratory
IPC	Institute of Paper Chemistry
IPP	International Plant Pathogens
ir	infrared
I^2R	loss of energy from electrical resistance

I_{sc}	short-circuit current
ISTIG	intercooled steam-injected gas turbine
ITER	International Thermonuclear Experimental Reactor
IVP	Integrated Value-Based Planning (project of EPRI)
J	joule
K	kelvin
keV	kiloelectron volt
kg	kilogram
kJ	kilojoule
km	kilometer
KMS	K.M.S. Fusion
KrF	krypton-fluorine
KRW	Kellogg-Rust-Westinghouse
ksi	kilopounds per square inch
kVA	kilovolt-ampere
kW	kilowatt
kW(e)	kilowatt (electrical)
kWh	kilowatt-hour
L	liter
LAN	local area network
LANL	Los Alamos National Laboratory
lb	pound
LBNL	Lawrence Berkeley National Laboratory
LCP	liquid crystalline polymer (molecular composite)
LCUP	Least-Cost Utility Planning Division (of DOE)
LDC	less developed countries
LeRC	Lewis Research Center (NASA, located at Cleveland)
LHRE	low-heat rejection engine
Li	lithium
LIMB	Limestone Injection Multistage Burner
LIS	laser isotope separation
LLE	Laboratory for Laser Energetics, University of Rochester
LLNL	Lawrence Livermore National Laboratory
lm	lumen
LMBFR	liquid-metal- (sodium-) cooled fast breeder reactor
LMF	Laboratory Microfusion Facility
LNG	liquid natural gas
LWR	light-water reactor
m^2	square meter
m^3	cubic meter
MBD	million barrels per day
MBtu	million British thermal units
MCFC	molten carbonate fuel cell
MEOR	microbially enhanced oil recovery
MeV	megaelectron volt
Mg	megagram (or megaton)
MgO	magnesium oxide

MHD	magnetohydrodynamics
MHTGR	modular high-temperature gas-cooled reactor
MHz	megahertz
min	minute
MIT	Massachusetts Institute of Technology
MJ	megajoule
MLIS	Molecular Laser Isotope Separation
mm	millimeter
MOSC	Mobil Oil Sludges
MOSFET	metal-oxide-semiconductor field-effect transistor
mp	melting point
mpg	miles per gallon
MSW	municipal solid waste
MTG	methanol to gasoline
MTI	Mechanical Technology, Inc.
MW	megawatt
MW(e)	megawatt (electrical)
MWh	megawatt-hour
N	nitrogen
Na	sodium
NaK	sodium-potassium eutectic
NaS	sodium sulfide
NAS	National Academy of Sciences
NASA	National Aeronautics and Space Administration
NBS	National Bureau of Standards
NEDO	New Energy Development Organization
NEPA	National Environmental Policy Act of 1969
NEPP-V	National Energy Policy Plan V
NGA	National Governors' Association
NH_3	ammonia
NHBA	National Home Builders Association
NiH_2	nickel hydride
NiO	nickel oxides
NMHC	nonmethane hydrocarbon
nmr	nuclear magnetic resonance
NO_2	nitrogen dioxide
NO_x	nitrogen oxide
NPC	National Petroleum Council
NPOVS	Nuclear Power Options Viability Study
NPP	National Photovoltaics Program
NPR	new production reactor
NPRA	National Petroleum Refiners Association
NRL	Naval Research Laboratory
NRRI	National Regulatory Research Institute
ns	nanosecond
NSF	National Science Foundation
NSPS	New Source Performance Standards

n-type	negative electrical carrier (hole)
O_2	oxygen
O_3	ozone
O&M	operation and maintenance
OMB	Office of Management and Budget
OOIP	original oil in place
OOP	object-oriented programming
OPEC	Organization of Petroleum Exporting Countries
ORNL	Oak Ridge National Laboratory
OSHA	U.S. Occupational Safety and Health Administration
OTA	Office of Technology Assessment
OTEC	ocean thermal energy conversion
P	phosphorus
PAFC	phosphoric acid fuel cell
Pb	lead
PBFA	Particle Beam Fusion Accelerator
pc	polycrystalline
PCB	polychlorinated biphenyl
pCi	picocurie
PE	1. Planning and Evaluation Division (of EPRI) 2. power electronics
PEAC	Power Electronics Application Center
PED	photoemission diode
PEM	proton exchange membrane (fuel cell)
PESC	passivated emitter solar cell
PFBC	pressurized fluidized bed combustion
PIC	1. power integrated circuit 2. product of incomplete combustion
PJ	picojoule
PM	particulate matter
pn junction	interface between two regions treated so that one electrical carrier is positive and the other is negative
PNL	Pacific Northwest Laboratories
ppb	parts per billion
PPPL	Princeton Plasma Physics Laboratory
ppm	parts per million
psia	pounds per square inch, absolute
p-type	positive electrical carrier (electron)
Pu	plutonium
PUC	public utility commission
PURPA	Public Utility Regulatory Policies Act of 1978
PV	photovoltaic
PVEC	photovoltaic energy conversion
R&D	research and development
RC	Rankine cycle
RCRA	Resource Conservation and Recovery Act of 1976
RD&D	research, development, and demonstration

RDF	refuse-derived fuel
rf	radiofrequency
Rn	radon
ROR	rate of return
rpm	revolutions per minute
s	second
S	sulfur
SAF	Society of American Foresters
SBIR	Small Business Innovation Research
scf	standard cubic foot
SDI	Strategic Defense Initiative
SERI	Solar Energy Research Institute
SFE	supercritical fluid extraction
SG	synthesis gas
Si	silicon
SiC	silicon carbide
SIC	Standard Industrial Classification
sm/g	seat miles per gallon
SNG	substitute natural gas
SNL	Sandia National Laboratory
SO_2	sulfur dioxide
SOFC	solid oxide fuel cell
SO_x	sulfur oxide
SSF	simultaneous saccharification and fermentation
SST	supersonic transport (plane)
STIG	steam-injected gas turbine
T	1. temperature 2. tesla 3. tritium
TAHP	thermally activated heat pump
TBP	tetraphenylboron
T_c	transition temperature
TCA	Turbulent Contact Absorber
TCF	trillion cubic feet
T&D	transmission and distribution
TEL	tetraethyl lead
TES	thermal energy storage
TFTR	Tokomak Fusion Test Reactor
TFWE	Task Force on Wood Energy
Th	thorium
TJ	terajoule
TMI	Three Mile Island
TRU	transuranium
TVA	Tennessee Valley Authority
U	uranium
UHB	ultrahigh bypass
UHV	ultrahigh voltage

UHVAC	ultrahigh-voltage alternating current
UNESCO	United Nations Educational, Scientific and Cultural Organization
USDA	U.S. Department of Agriculture
USFS	U.S. Forest Service
USSC	United States Steel Corporation
V-I	voltage-current
VAC	alternating current volt
var	voltage and reactive power
VAWT	vertical-axis wind turbine
VCR	video cassette recorder
VLSI	very large scale integrated
V_{oc}	open-circuit voltage
VSWT	variable-speed wind turbine
VW	Volkswagen
WETC	Wind Energy Test Center (SERI)
ZnBr	zinc bromine
$ZnBr_2$	zinc bromide
Zn/Cl	zinc chlorine
ZrO_2	zirconia
μm	micrometer
Ω-cm	ohm-centimeter

ABSTRACT

Early in 1988, the management of Oak Ridge National Laboratory (ORNL) decided to organize an internal study to review the status of energy technologies and to identify the research and development opportunities that could make a difference for both the United States and the rest of the world. More than 100 ORNL staff members were organized into teams to review the status of technology in 18 areas covering energy use, energy supply, and crosscutting science. Each team attempted to identify significant technological advances that could be made within a reasonable time and cost.

The results of the study are being published in two volumes. The first volume is the synthesis report, while the second volume is the collection of the 18 team reports. The three parts of Vol. 2 review (1) end-use technology, (2) supply technology, and (3) crosscutting science and technology.

This part of Vol. 2 reviews supply technology.

INTRODUCTION TO PART 2

Much has happened in energy technology in the past decade. A few examples are the Cool-Water combined-cycle power plant, high-efficiency heat pumps (both electric and adsorption), low-emittance glass for buildings, and more efficient high-performance automobiles. In addition, recent advances in materials (high-temperature materials and liquid nitrogen temperature superconductors) and other crosscutting technologies hold great promise for future developments.

Early in 1988, the management of Oak Ridge National Laboratory (ORNL) decided to organize an internal study to review the status of energy technologies and to identify the research and development (R&D) opportunities that could make a difference for both the United States and the rest of the world.

The study examined energy R&D from two directions. The first direction was bottom-up. More than 100 ORNL staff members and several researchers from other institutions were organized into teams to review the status of technology in 18 areas covering energy use, energy supply, and crosscutting science (the team members are listed at the beginning of Part 1). Each team attempted to identify significant technological advances that could be made within a reasonable time and cost.

The second direction was top-down. The objectives of energy system R&D are to solve problems, to provide technological alternatives to cope with future circumstances, and to provide new opportunities. The synthesis team reviewed the energy situation, the problems with the energy system, possible future circumstances, and desirable characteristics of the future energy system. Having reviewed potential problems and future circumstances, the team formulated a balanced R&D strategy into which bottom-up R&D opportunities were fitted.

To perform the bottom-up review, each study team identified a comprehensive list of R&D opportunities in the team's area, used a judgmental methodology to evaluate the opportunities, and identified those that showed promise. This introduction reviews the methodology, and the body of the report reviews the status of technology and identifies R&D opportunities.

Each of the 18 teams reviewed the research programs at ORNL, the other national laboratories, universities, and private labs. Discussions were held at many of these institutions. The teams relied heavily on the research plans of the U.S. Department of Energy, the Electric Power Research Institute, and the Gas Research Institute. Each team prepared an area-related report that summarized the R&D opportunities. The reports are collected in the three parts of Vol. 2. The three parts review (1) end-use and energy conversion technologies, (2) supply technology, and (3) crosscutting science and technology.

At the start of the study, each team was asked to address the following questions:

1. What significant advances in technology have occurred in the past five years?
2. Why are these advances significant for the future of the energy system?
3. Which R&D opportunities look promising to produce future significant advances?
4. What is the probability of success for the R&D?
5. If the R&D is successful, could it improve U.S. competitiveness?
6. If the R&D is successful, what impacts might the resulting technology have on the social, institutional, and regulatory practices of the nation?

Naturally, the team reports are uneven in length because some teams were perhaps more vigorous than others and because more is known about some areas than others. The length of the team reports is not a measure of the significance of the opportunities for R&D. Some team reports are brief (and well written); other reports are more voluminous (and also well written).

Some topics have been neglected in the team reports. For example, although the report on nuclear fission is quite comprehensive, the discussion of waste disposal and proliferation is limited.

After reviewing the team reports, the synthesis team and the technology team prepared the comprehensive list of R&D opportunities that comprises Appendix A of the synthesis report (Vol. 1).

The selection of the R&D options that can make a difference requires a methodology. The synthesis team developed a matrix methodology to evaluate R&D options. Sixteen criteria in six categories were applied (see Table 1).

Most of the 16 criteria defined in Table 1 are straightforward. A few words of explanation and interpretation may be helpful, however, with respect to the first three criteria, which relate to energy significance.

We considered three time frames: near term (by the year 2000), longer term (by the year 2040), and ultimate significance. For each option in each time frame, we assigned a rating (H for high significance, M for medium, and L for low) with numerical guidelines.

We created the third time frame (ultimate significance) for the large or inexhaustible energy sources (coal, breeder reactors, and solar and fusion energy). We struggled with the issue of whether or not an end-use technology can be inexhaustible. Is efficiency an exhaustible resource? Compared with the current fleet average, the improved mileage of a 50-mile/gal (mpg) car would incur a large energy savings that would last forever. But can the energy savings grow? The energy savings realized by replacing 10-mpg cars with 20-mpg cars is larger than the savings gained by replacing 25-mpg cars with 50-mpg cars (both changes are by a factor of two, but the base consumption is lower for the second case).

We decided that efficiency is an exhaustible resource. Thus, all but one of the technological options to improve end-use efficiency were given a score of L (significant limitations) for ultimate potential. However, the synthesis team assigned H (high performance) for ultimate potential of electric vehicles because, as an energy technology, their potential is unlimited. On the supply side, we decided that the ultimate potential of hydroelectricity and biomass is significantly limited.

To estimate energy significance, we approximated the potential market for each option and the projected market penetration. In general, we assumed that future markets would be about the same size as current markets.

We adopted two different methods for defining the magnitude of the energy associated with an option. For end-use options, we estimated energy savings. For energy conversion, storage, and supply options, we estimated the magnitude of the total installed capacity.

The criteria were developed from a review of energy issues—in particular, those factors that influence how the energy system will be able to meet society's needs [as discussed in Chap. 2 of the synthesis report (Vol. 1)]. The criteria emphasize the magnitude of the potential energy contribution of the technology by assuming successful development and implementation; the economic advantage that may accrue; the effect on national energy security; and the environmental, social, and international impacts it may have. Because the

crosscutting research can provide benefits to many options, we did not apply our methodology to the crosscutting technologies listed in Appendix B of the synthesis report.

Clearly, there is no perfect energy technology. Everything in use now or under development has some serious liabilities. Each technology may have a limited resource base (oil and natural gas), cause significant environmental damage (coal), pose safety concerns (nuclear), be expensive (solar), or require action by many people to be implemented widely (efficiency improvements). The 16 criteria are an attempt to create a level playing field for the evaluation of a wide variety of technological options that use or supply energy.

Fifty technologies or technological areas were selected as having the greatest promise and are listed in Table 3-2 of the synthesis report (Vol. 1). This list was prepared by evaluating the technological options listed in Appendix A (Vol. 1) and using the 16 criteria. The detailed evaluations are summarized in tables at the end of this introduction.

While the details of the evaluation procedure varied from team to team, most of the evaluations were performed in meetings between the technology team and each synthesis team. The meetings began with a review of the state of the technology and the identification of the options listed in Appendix A (Vol. 1). To introduce the 16 criteria, several options were evaluated in the meeting. Usually, an aggregate option was evaluated. For an example, consider that, in Appendix A, seven technological options are listed for steel. In the large meeting, an evaluation was performed for the aggregation of the seven options. Later, in a smaller meeting, an evaluation was performed for each of the seven options.

After all of the aggregate analyses were completed, the technology team and the synthesis team chose the aggregated options with the greatest promise that are listed in Table 3-2 of the synthesis report (Vol. 1). The selections in this table were made on the basis of judgements of the overall pattern of the ratings for the 16 criteria. Table 3-3 of the synthesis report (Vol. 1) shows the evaluation under the criteria for the fifty options. More detailed evaluations are summarized in Table 2 at the end of this introduction.

The criteria provided a basis for systematically reviewing each option. Care was taken to ensure that the criteria were consistently applied and that the options selected represented the most attractive opportunities based on the results. No quantitative weighting methodology was used. As discussed in Chap. 2 of the synthesis report (Vol. 1), no one knows just what our energy requirements will be in the future, so various perceptions of energy needs lead to different R&D programs to meet those needs. In addition, R&D programs are inherently unpredictable, and observers do not necessarily share the same expectations of success. Therefore, there is no completely objective way to rigorously compare different types of programs, and it should be noted that the list is, by its nature, somewhat subjective. A different group of analysts using the same methodology may have produced a different list (although there almost certainly would be a substantial overlap). However, these results have been widely reviewed within ORNL, and major differences of opinion have led to appropriate revisions in the list.

Thus, there have been three levels of evaluation: first, the preparation of the list of R&D options by the researcher teams (Appendix A); second, the comparison to the energy, economic, environmental, and social criteria; and third, the review of the results by the researchers and other observers.

This part of Vol. 2 presents the team reports for the supply technologies.

Table 1. Criteria for selecting top R&D opportunities

Energy significance

1. Does this technology have the potential for making a major near-term (by the year 2000) contribution to our energy system (assuming the economics prove reasonable)?
   - H 1 quad/year equivalent
   - M at least 0.2 quad/year
   - L less than 0.2 quad/year

2. Does this technology have the potential for making a major longer term (by 2040) contribution?
   - H 4 quads/year equivalent
   - M 1 quad/year
   - L less than 1 quad/year

3. Can the technology continue to grow indefinitely beyond the 50-year time frame, or is it resource or application constrained?
   - H virtually inexhaustible and unconstrained
   - L significant limitations

Economics and international competitiveness

4. Is the technology likely to be cost competitive with other means of satisfying the energy requirements?
   - + likely to be competitive even at low energy prices
   - 0 competitive with modest price rise [i.e., oil at $20-35/barrel (bbl)]
   - - competitive only with expensive energy (i.e., oil over $35)

5. Is the technology well enough understood at this time that the cost projections assumed in question 4 can be considered accurate?
   - + cost projections should be accurate, few if any hidden surprises
   - 0 about the same as most R&D options
   - - many uncertainties

6. Will this technology generate significant exports of equipment, services, or resources?
   - ++ large potential market
   - + some but not great
   - 0 negligible

7. Is development likely to lead to other valuable technologies?
   - + significant potential
   - 0 little potential

Table 1. (continued)

Environmental, health, and safety impacts

8. Is the technology likely to be free of major problems such as large quantities of toxic materials or nuclear accidents?
   - + little risk, or much less likely than current equivalents
   - 0 about the same as current equivalents
   - - some major uncertainties

9. Would deployment of this technology result in reduced emissions of carbon dioxide (CO_2)?
   - + significantly less CO_2 likely to be released
   - 0 not much difference, or depends on what it replaces
   - - likely to produce more

10. Would manufacture and use of this technology be relatively free of routine but damaging environmental and occupational impacts?
    - + little potential for problems
    - 0 will require regular monitoring and corrections

Energy security

11. Will this technology reduce oil imports?
    - ++ yes, by at least 200,000 bbl/d (0.4 quad/year) by 2000
    - + some, but less than that
    - 0 little or none, maybe even negative

12. Will this technology facilitate shifts to other fuels in case of shortages of oil or natural gas?
    - + easy to shift fuels, at least 200,000 bbl/d within one year
    - 0 some but less than that
    - - may make the system less flexible

Social impacts

13. Is the existing industrial/commercial infrastructure well organized to deploy this technology?
    - + can be easily accommodated
    - 0 moderate changes to institutions required
    - - major changes required

14. Is the technology likely to be readily accepted by the public?
    - + likely to be popular
    - 0 generably acceptable or no impact on the public
    - - likely to be controversial

Table 1. (continued)

15. Will this technology be free of concerns (e.g., nuclear accidents or cost overruns) that could make it appear to be a high-investment risk?
    - + few if any problems anticipated
    - 0 some problems, but should be manageable
    - - major uncertainties

Less developed country impacts

16. Will this technology be directly beneficial to poor countries?
    - + will be quite useful
    - 0 few or no advantages

Note: H = high, M = medium, L = low.

Table 2. Evaluation of promising R&D options for energy supply

Technological opportunities[a]	Energy significance			Economics/competitiveness				Environment			Security		Social do-ability			LDC impact
	Near term	Long term	Ultim potent	Energy costs	Cost uncert	Export equip	Spin offs	Severe impact	CO_2	Other	Oil imp	Fuel flex	Infra struct	Public percep	Invest risk	
2.1. Fossil energy																
2.1.2. Oil and gas																
Field characterization techniques	H	M	L	0	+	+	0	0	0	0	++	0	+	0	0	0
Enhanced oil recovery	H	M	L	0	+	+	0	0	0	0	++	0	+	0	0	0
Tar sands	L	L	L	0	+	0	0	0	0	0	0	0	+	0	0	0
Heavy oil	L	L	L	0	+	0	0	0	0	0	0	0	+	0	0	+
Oil shale	L	H	H	–	–	0	0	0	–	–	0	0	–	–	–	0
Exploration and drilling techniques	H	M	L	0	+	+	0	0	0	+	++	0	+	0	0	0
Tight sands	H	H	L	0	+	+	0	0	0	+	++	0	+	0	0	0
Devonian shales	M	M	L	0	+	0	0	0	0	+	+	0	+	0	0	0
Coal seams	M	M	L	0	0	0	0	0	0	+	+	0	+	0	0	0
2.1.5. Coal																
Micro coal & coal/liquid slurry	M	M	L	+	+	++	+	0	–	0	+	+	+	0	+	+
Fluidized bed (atmospheric combustion, pressurized combustion)	M	H	H	+	0	++	+	0	–	+	+	0	+	0	+	+
Reduction of sulfer oxides and nitrogen oxides				+	0	++	0	0	–	+	0	0	+	0	0	0
Direct liquefaction	L	H	H	–	0	++	0	–	–	0	++	0	0	–	–	0
Combined cycle (integrated coal gasification, steam-injected gas turbine & intercooled steam-injected gas turbine)	M	H	H	+	0	++	0	0	0	+	+	+	+	0	+	+
Indirect liquefaction	L	H	H	–	0	++	0	–	–	0	++	0	0	–	–	0
Bioprocessing liquefaction	L	M	H	–	–	++	+	–	–	0	++	0	0	–	–	0
High Btu gasification	M	H	H	0	0	++	0	0	–	–	+	0	0	–	0	+
Bioprocessing gasification	L	M	H	–	–	++	+	0	–	–	+	0	0	–	0	+
In situ gasification	M	H	H	0	–	+	0	–	–	–	+	0	0	–	0	0

Table 2. (continued)

Technological opportunities[a]	Energy significance			Economics/competitiveness				Environment			Security		Social do-ability			
	Near term	Long term	Ultim potent	Energy costs	Cost uncert	Export equip	Spin offs	Severe impact	CO_2	Other	Oil imp	Fuel flex	Infra struct	Public percep	Invest risk	LDC impact
2.2 Nuclear fission																
Improve existing plants	H	M	L	+	+	+	+	+	+	+	+	0	+	+	+	0
Advanced concepts	L	H	L	+	0	++	+	+	+	0	+	0	+	0	0	+
Resource extension	L	M	H	–	0	++	+	–	+	0	0	0	0	–	–	0
Waste management	L	H	H	+	+	0	0	+	+	+	0	0	–	0	0	0
2.3 Fusion																
Reactor systems	L	L	H	0	0	0	+	+	+	0	0	0	0	+	–	0
Fuel cycle	L	L	H	0	0	0	+	+	+	0	0	0	0	+	–	0
2.4 Renewables																
2.4.1 Hydro	M	M	L	0	+	0	+	+	+	0	+	0	–	–	0	+
2.4.2 Biomass	M	H	L	0	0	+	+	+	+	–	++	0	–	0	+	+
2.4.3 Solar thermal	L	M	H	–	–	++	0	+	+	+	+	0	0	+	+	+
2.4.4 Municipal solid waste	M	M	L	+	+	0	0	0	0	–	0	0	0	–	0	0
Collection	M	M	L	0	0	+	+	+	0	–	0	0	–	0	0	0
Separation	M	M	L	0	0	0	0	0	0	–	0	0	+	–	–	0
Secondary recycling	M	M	L	+	+	0	0	0	0	–	0	0	0	–	0	0
Tertiary recycling	M	L	L	0	+	0	+	+	0	0	0	0	–	–	0	0
Quaternary recycling	M	L	L	0	+	0	+	+	0	0	0	0	–	–	0	0
2.4.5 Solar photovoltaic	L	M	H	–	–	++	+	+	+	0	+	0	0	+	+	+
2.4.6 Wind	L	M	L	0	0	++	0	+	+	0	+	0	0	0	+	+
2.4.7 Geothermal	M	M	L	0	0	0	0	0	+	–	0	0	+	–	–	+
Hydrothermal	M	M	L	+	+	0	0	0	+	–	0	0	+	–	0	+
Hot dry rock	L	M	L	0	0	0	0	0	+	–	0	0	+	–	–	0
Geopressure	L	M	L	0	0	0	0	0	+	–	0	0	+	–	–	0
Magma	L	L	L	–	–	0	0	0	+	–	0	0	0	–	–	+

Note: CO_2 = carbon dioxide. LDC = less developed countries. L = low energy significance; M = medium energy significance; and H = high energy significance. See Table 1 for definitions of 0, +, and -.

[a]The numbers identify the sections where the entries are located.

2. SUPPLY TECHNOLOGY

2.1 FOSSIL ENERGY *[by R. A. Bradley (Leader), P. T. Carlson, T. Fox, R. L. Graves, R. R. Judkins, R. P. Krishnan, D. B. Reister, and J. S. Watson]*

2.1.1 Introduction *(by R. A. Bradley)*

For the foreseeable future, fossil energy will be the primary energy source for the United States and for the rest of the world. Fifty years ago (see Table 2.1 in Vol. 1), fossil energy provided 99% of the energy for the world; today, the fossil share is 88%. The fossil energy share in 2050 ranges from 70% in the high-efficiency scenario to 75% in the moderate-efficiency scenario.

In the past 50 years, world energy usage has changed from coal to oil and gas. In the next 50 years, usage may return to coal (and oil shale). Twenty years ago, we expected the transition from oil and gas to coal to be well under way by 2000. The unexpected reduction in the rate of increase in energy consumption has pushed the expected date for the transition well into the next century. Because oil and gas resources are much smaller than coal resources, the transition must occur eventually.

Many of the environmental stresses from human activity are related to the production and consumption of fossil fuel. The environmental concerns include air pollution, coal mining, oil spills, acid rain, and climate change.

The goals of fossil fuel R&D are to extend the oil and gas resources, to produce liquid and gaseous fuels from coal, and to reduce the environmental impacts of fossil fuel.

This section reviews the estimates of the fossil fuel resource base and discusses promising R&D opportunities.

2.1.2 Oil and Gas Resources *(by D. B. Reister)*

This section reviews the oil and gas resources of the United States and the rest of the world. The conventional oil and gas resources of the United States will be depleted before those of the rest of the world. As the U.S. resources are consumed, unconventional oil and gas will be required to enhance domestic resources and reduce dependence on imported oil and gas.

2.1.2.1 U.S. energy situation

In the 13 years from 1960 to 1973, U.S. oil consumption increased from 9.8 million barrels per day (MBD) to 17.3 MBD. If the trend had continued for the next 13 years, the oil consumption in 1986 would have increased by 7.5 MBD (17.3 - 9.8 = 7.5) to 24.8 MBD. After the oil embargo in 1974, oil consumption continued to increase and reached 18.8 MBD in 1978. The large increases in oil prices from 1979 to 1981 resulted in a large drop in consumption (consumption reached 15.2 MBD in 1983).

Domestic crude oil production increased from 7.0 MBD in 1960 to 9.6 MBD in 1970, and production declined to 8.1 MBD in 1976. Alaskan production exceeded 1.0 MBD in 1978, and the price increases from 1979 to 1981 encouraged more production until production reached 9.0 MBD in 1985. Production in the contiguous states continued to decline and reached 7.1 MBD in 1985. Net oil imports increased from 1.6 MBD in 1960 to 4.5 MBD in 1973 and 8.0 MBD in 1978. The price increases from 1979 to 1981 reduced

consumption and increased production. The imports averaged 4.4 MBD from 1982 to 1985. The collapse of the oil price in 1986 increased consumption (+5% from 1985 to 1987), reduced production (-7%), and increased imports (+35%). In 1987, consumption was 16.6 MBD, production was 8.3 MBD, and imports were 5.8 MBD.

2.1.2.2 Oil resources

Resource assessments are inherently controversial. The assessments are produced by large teams reviewing databases that depend on a set of definitions and assumptions, and the results are politically sensitive. The numbers used in this section are from a recent assessment by Charles Masters and his associates at the U.S. Geological Service (USGS) and the Energy Information Administration (EIA) (Masters 1987). As of June 1988, the USGS was revising the resource estimates for the United States amidst a storm of controversy. The final revised numbers for the United States will probably be quite close to the values used by Masters (1987).

The geographical distribution of world petroleum reserves is narrow, with about 75% of the ultimate resources of both oil and gas occurring in three regions (North America, the Soviet Union, and the Middle East). Only 22 basins have had oil discoveries of more than 10 billion barrels (BB). Their combined original reserves are more than 75% of the world total. The most recent discoveries were the North Slope (1968) and the North Sea (1969). The characteristics that permit the origin and trapping of large occurrences of oil are inherently basin characteristics and are commonly defined in the early stages of exploration. Thus, the probability of the existence of undiscovered large basins is small.

Estimates of crude oil resources for five regions of the world are presented in Table 2.1-1 and displayed in Fig. 2.1-1. Two of the five regions have unconventional definitions. "America" includes all North and South American countries except the United States. "Other" includes Europe, Africa, Asia, and Oceania.

Table 2.1-1. World resources of crude oil (billions of barrels)

Region	1984 production	Cumulative production	Identified reserves	Undiscovered resources	Ultimate resources	(R+U)/P[a]
USA	3.25	135.8	47.4	37.0	220.0	26
America	2.83	75.6	94.6	80.4	250.9	62
USSR	4.48	85.7	81.0	77.0	247.2	35
Mideast	4.20	142.3	420.9	98.0	661.1	124
Other	4.98	84.6	151.5	118.3	354.1	54
World	19.72	524.0	795.4	425.0	1744.0	62

Source: Based on data from C. D. Masters et al., "World Resources of Crude Oil, Natural Gas, Natural Bitumen, and Shale Oil," *World Petroleum Congress,* Houston, 1987.

[a](R+U)/P = Sum of identified reserves (R) and undiscovered reserves (U) divided by 1984 production (P).

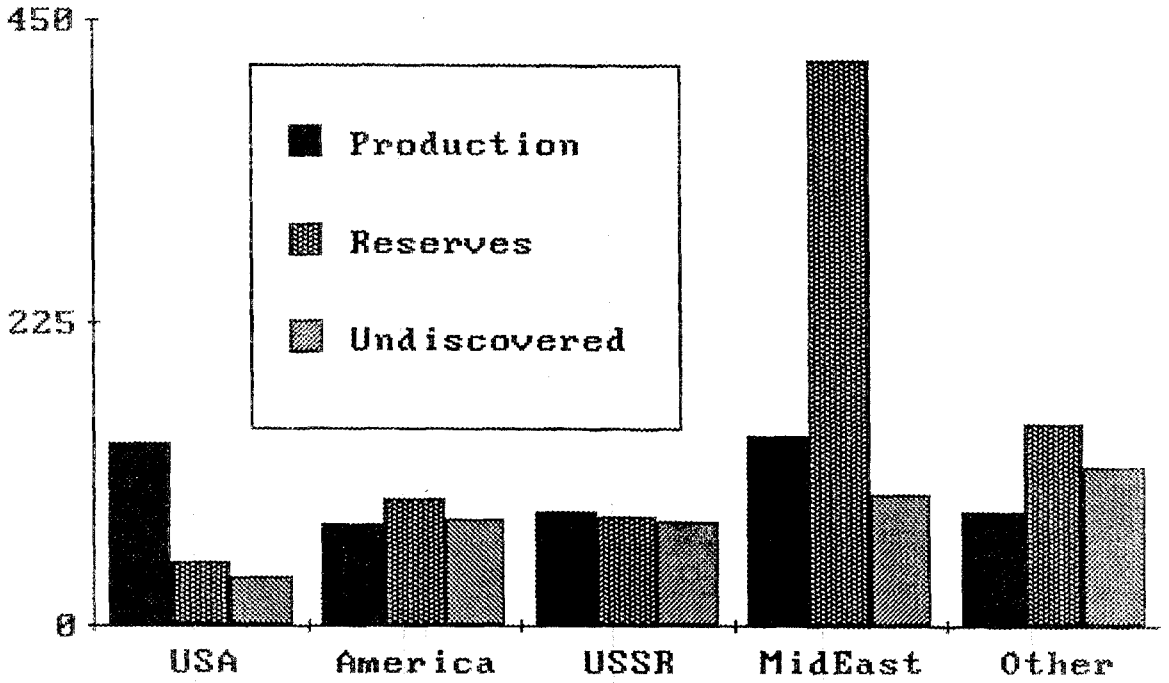

Fig. 2.1-1. Cumulative production, identified reserves, and undiscovered resources of crude oil for the world (billions of barrels). *Source:* Based on data from C. D. Masters et al., "World Resources of Crude Oil, Natural Gas, Natural Bitumem, and Shale Oil," *World Petroleum Congress,* Houston, 1987.

"Identified reserves" include measured reserves, indicated reserves, and a portion of inferred reserves. Measured reserves are estimates of the amount of crude oil that geological and engineering data demonstrate with reasonable certainty to be recoverable in future years from known reservoirs under existing economic and operating conditions. The measured reserves for an oil field grow as the field is developed.

For the United States, the average value for the ratio of the final estimate of measured reserves to the initial estimate is 7.6. Consider an average field that contains 76 barrels of oil. When the field is discovered, the measured reserves are 10 barrels and the sum of indicated reserves and inferred reserves is 66 barrels. As the field is developed, the oil moves from inferred reserves to indicated reserves to measured reserves to cumulative production. At the end of the life of the field, the cumulative production will be 76 barrels.

Reported values for the inferred reserves tend to be underestimates. Thus, Masters and his colleagues (1987) assumed that their values for the identified reserves include only a portion of the inferred reserves.

Estimated "undiscovered resources" are resources thought to be geologically possible and technically recoverable within a reasonable price range. Masters and his colleagues (1987) reported undiscovered resources in a probability range from 95% to 5%. The values in Table 2.1-1 are the mean estimates.

The weighted average recovery factor for conventional oil is 34%, and the estimates of oil resources in Table 2.1-1 are based on this recovery rate. Thus, if the ultimate resource is 1744 BB, the original oil in place was more than 5000 BB.

"Ultimate resources" are the sum of undiscovered resources, identified reserves, and cumulative production. As oil is discovered, developed, and produced, it moves from undiscovered resources to identified reserves to cumulative production. The values in Table 2.1-1 are estimates for a particular date–January 1, 1985.

The column of Table 2.1-1 that is labeled "(R+U)/P" is the sum of identified reserves (R) and undiscovered resources (U) divided by the production in 1984 (P). If production is constant, the ratio is the number of years required to produce the remaining oil in the region. Although the production is not likely to be constant, the ratio is a useful measure of the magnitude of the remaining oil.

For the United States, the cumulative production of oil to the end of 1984 is 136 BB. The identified reserves are 47 BB, and the mean estimate of the undiscovered economically recoverable oil is 37 BB. Thus, the mean estimate of the ultimate production is 220 BB; 62% has been produced, 21% is identified, and 17% is undiscovered. The ratio of the sum of identified plus undiscovered and annual production is 26 years.

For the world, the cumulative production of oil is 524 BB, the identified reserves are 795 BB, and the mean estimate of the undiscovered economically recoverable oil is 425 BB. Thus, the mean estimate of the ultimate production is 1744 BB; 30% has been produced, 46% is identified, and 24% is undiscovered. The ratio of the sum of identified plus undiscovered and annual production is 62 years.

For the Middle East, the cumulative production of oil is 142 BB, the identified reserves are 421 BB, and the mean estimate of the undiscovered economically recoverable oil is 98 BB. Thus, the mean estimate of the ultimate production is 661 BB; 21% has been produced, 64% is identified, and 15% is undiscovered. The ratio of the sum of identified plus undiscovered and annual production is 124 years.

In Fig. 2.1-1, the summary for the United States is strikingly different from those for the other four regions. The United States has produced more than one-half (62%) of its ultimate resources, while the other regions have produced less than 35% of their ultimate resources. The second significant feature of the figure is that the Middle East has the majority of the identified reserves for the world. The United States is likely to become heavily dependent on imported oil from the Middle East until the vast reserves of oil in the Middle East are consumed.

2.1.2.3 Gas resources

Estimates of resources of natural gas for five regions of the world are presented in Table 2.1-2 and displayed in Fig. 2.1-2.

For the United States, the cumulative production of gas is 635 trillion cubic feet (TCF). The identified reserves are 327 TCF, and the mean estimate of the undiscovered economically recoverable gas is 272 TCF. Thus, the mean estimate of the ultimate production is 1234 TCF; 51% has been produced, 27% is identified, and 22% is undiscovered. The ratio of the sum of identified plus undiscovered and annual production is 33 years. For the world, the cumulative production of gas is 1173 TCF, the identified reserves are 3908 TCF, and the mean estimate of the undiscovered economically recoverable gas is 4199 TCF. Thus, the mean estimate of the ultimate production is 9280 TCF; 13% has been produced, 42% is identified, and 45% is undiscovered. The ratio of the sum of identified plus undiscovered and annual production is 138 years.

For North America, the cumulative production of gas is 708 TCF, the identified reserves are 503 TCF, and the mean estimate of the undiscovered economically recoverable

Table 2.1-2. World resources of natural gas (trillions of cubic feet)

Region	1984 production	Cumulative production	Identified reserves	Undiscovered resources	Ultimate resources	(R+U)/P[a]
USA	18.08	635.1	326.9	272.0	1234.0	33
America	6.92	99.1	299.4	567.8	957.7	125
USSR	19.40	234.1	1275.4	1227.0	2819.3	129
MidEast	1.32	23.1	1186.9	939.0	2149.0	1610
Other	13.15	181.8	819.4	1047.5	1989.7	142
World	58.90	1173.1	3908.0	4199.4	9280.5	138

Source: Based on data from C. D. Masters et al., "World Resources of Crude Oil, Natural Gas, Natural Bitumen, and Shale Oil," *World Petroleum Congress,* Houston, 1987.

[a](R+U)/P = Sum of identified reserves (R) and undiscovered reserves (U) divided by 1984 production (P).

gas is 697 TCF. Thus, the mean estimate of the ultimate production is 1908 TCF; 37% has been produced, 26% is identified, and 37% is undiscovered. The ratio of the sum of identified plus undiscovered and annual production is 52 years.

For the Middle East, the cumulative production of gas is 23 TCF, the identified reserves are 1187 TCF, and the mean estimate of the undiscovered economically recoverable gas is 939 TCF. Thus, the mean estimate of the ultimate production is 2149 TCF; 1% has been produced, 55% is identified, and 44% is undiscovered.

The United States has used 51% of its ultimate production of conventional gas. As the conventional gas is consumed, the United States will turn to imported gas and unconventional gas. The cost of gas transportation by pipeline is considerably lower than the cost of shipment of liquified natural gas (LNG). The pipeline connections for the United States are limited to Canada, Mexico, and Alaska. For the next 50 years, conventional gas will be the primary source of gas in the North American market.

As the gas price increases, LNG and unconventional gas will penetrate the market and the high price will encourage gas customers to switch to electricity and coal.

Figure 2.1-3 compares the oil and gas resources for the world. The ultimate resource of natural gas is 1632 BB—a value that is close to the ultimate resource of crude oil (1744 BB). The cumulative production of gas is much less than for oil, the identified reserves are similar for oil and gas, and the undiscovered resources are larger for oil than for gas.

2.1.2.4 Unconventional oil

Unconventional oil includes heavy oil, tar sands, and oil shale. The ultimately recoverable resources of unconventional oil are compared with those of conventional oil in Fig. 2.1-4. The resources of oil shale are larger than those of conventional oil, while the resources of heavy oil and tar sands (bitumen) are smaller than those of conventional oil.

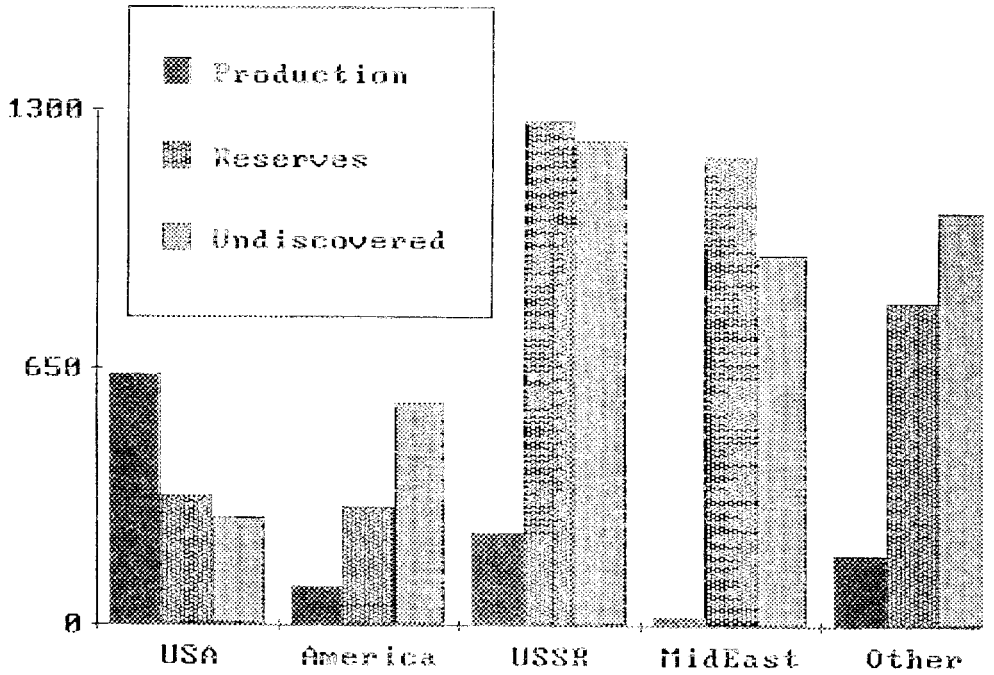

Fig. 2.1-2. Cumulative production, identified reserves, and undiscovered resources of natural gas for the world (trillions of cubic feet). *Source:* Based on data from C. D. Masters et al., "World Resources of Crude Oil, Natural Gas, Natural Bitumem, and Shale Oil," *World Petroleum Congress,* Houston, 1987.

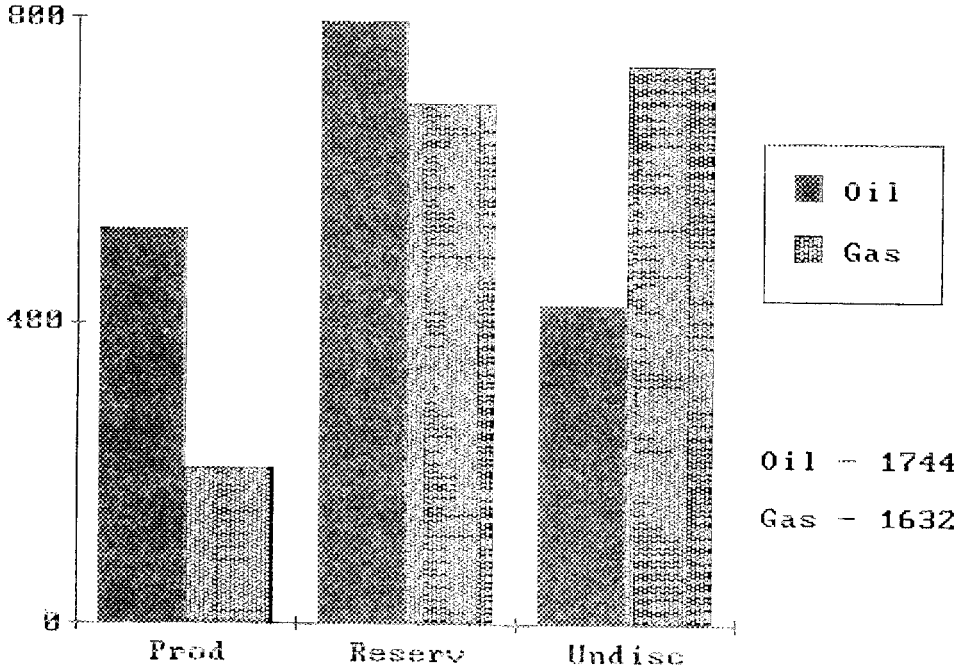

Fig. 2.1-3. World oil and gas resources (billions of barrels). *Source:* Based on data from C. D. Masters et al., "World Resources of Crude Oil, Natural Gas, Natural Bitumem, and Shale Oil," *World Petroleum Congress,* Houston, 1987.

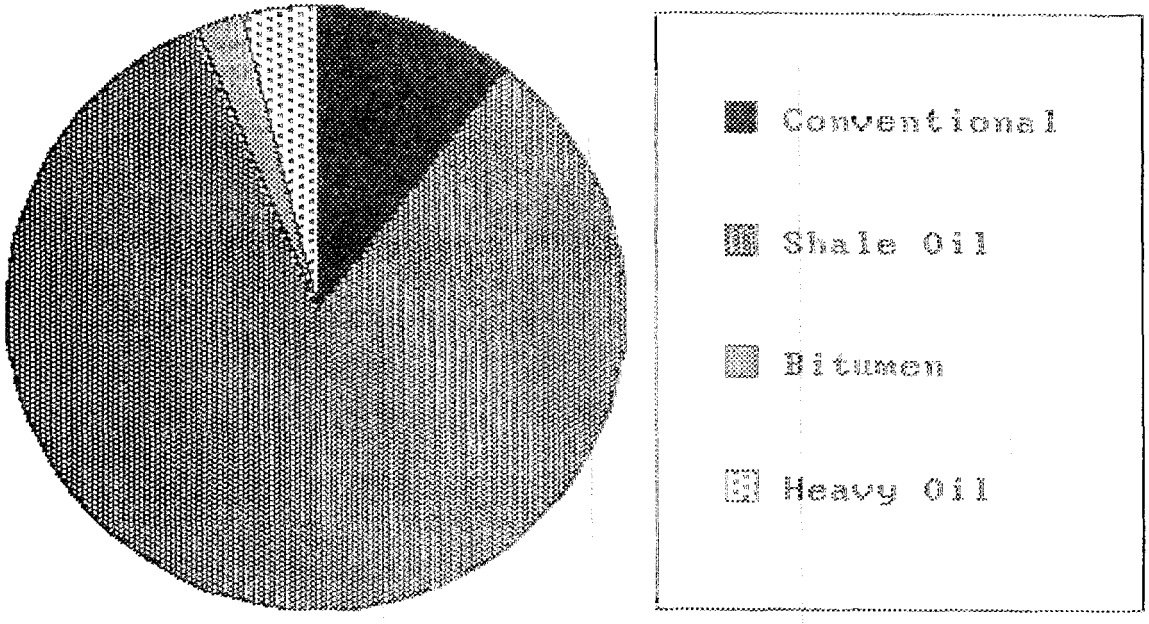

Fig. 2.1-4. World resources of conventional and unconventional crude oil. *Source:* Based on data from C. D. Masters et al., "World Resources of Crude Oil, Natural Gas, Natural Bitumem, and Shale Oil," *World Petroleum Congress,* Houston, 1987.

Current estimates of the ultimately recoverable resources of heavy oil are 31 BB for the United States, 312 BB for Venezuela, and 605 BB for the world (see Table 2.1-3 and Fig. 2.1-5). Comparing cumulative production with the total resource, cumulative production is 33% for the United States, 1% for Venezuela, and 6% for the world. Development of the Venezuelan heavy oil will reduce the world dependence on the Middle East.

Table 2.1-3. World resources of heavy oil (billions of barrels)

Region	Cumulative production	Identified reserves	Undiscovered resources	Ultimate resources
USA	10.1	18.1	2.8	31.0
America	5.1	291.6	40.8	337.5
USSR	5.2	108.7	20.9	134.8
Mideast	11.5	34.6	26.3	72.4
Other	2.5	23.1	4.0	29.6
World	34.3	476.1	94.8	605.4

Source: Based on data from C. D. Masters et al., "World Resources of Crude Oil, Natural Bitumen, and Shale Oil," *World Petroleum Congress,* Houston, 1987.

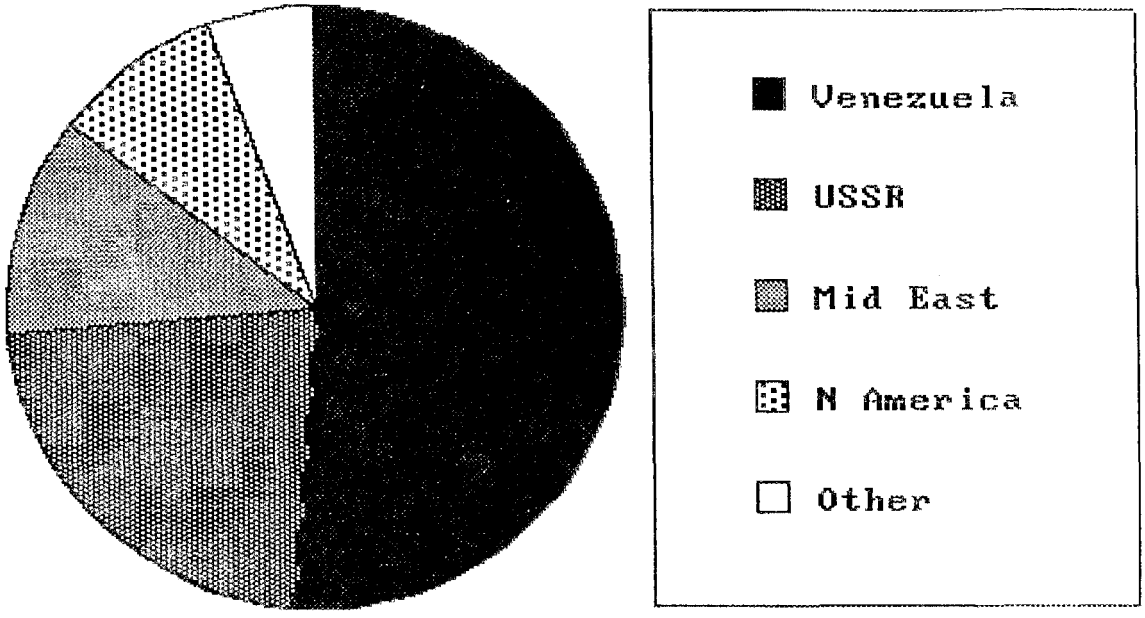

Fig. 2.1-5. **World resources of heavy oil.** *Source:* Based on data from C. D. Masters et al., "World Resources of Crude Oil, Natural Gas, Natural Bitumem, and Shale Oil," *World Petroleum Congress,* Houston, 1987.

Current estimates of the ultimately recoverable resources of tar sands (bitumen) are 308 BB for Canada and 436 BB for the world (see Table 2.1-4 and Fig. 2.1-6).

The current estimate of the resources of shale oil in place are 5,600 BB in North America and 13,883 BB for the world (see Table 2.1-4 and Fig. 2.1-7). Production experience is insufficient to estimate the recoverable resource for shale oil.

2.1.2.5 Unconventional gas

Unconventional gas includes tight sands, Devonian shale, methane from coal, gas hydrates, and geopressurized gas. Because Masters and his colleagues (1987) did not review the unconventional gas resources for the world, we use an assessment by the National Petroleum Council (NPC 1980). The size of the economically recoverable resource depends on price and rate of return. The highest estimate of reserve additions by 2000 is 363 TCF, with 80% from tight sands, 12% from coal seams, and 8% from Devonian shale. Estimates of the total recoverable resource are 600 TCF for tight sands, 400 TCF for Devonian shale, and 400 TCF for coal seams. Thus, the unconventional gas resources are probably larger than the undiscovered conventional resource and comparable to the total conventional resource.

Table 2.1-4. World resources of tar sands and oil shale
(billions of barrels)

Region	Tar sands	Oil shale
North America	315	5,600
South America	0	4,000
USSR	117	
Other	4	4,283
World	436	13,883

Source: Based on data from C. D. Masters et al., "World Resources of Crude Oil, Natural Gas, Natural Bitumen, and Shale Oil," *World Petroleum Congress,* Houston, 1987.

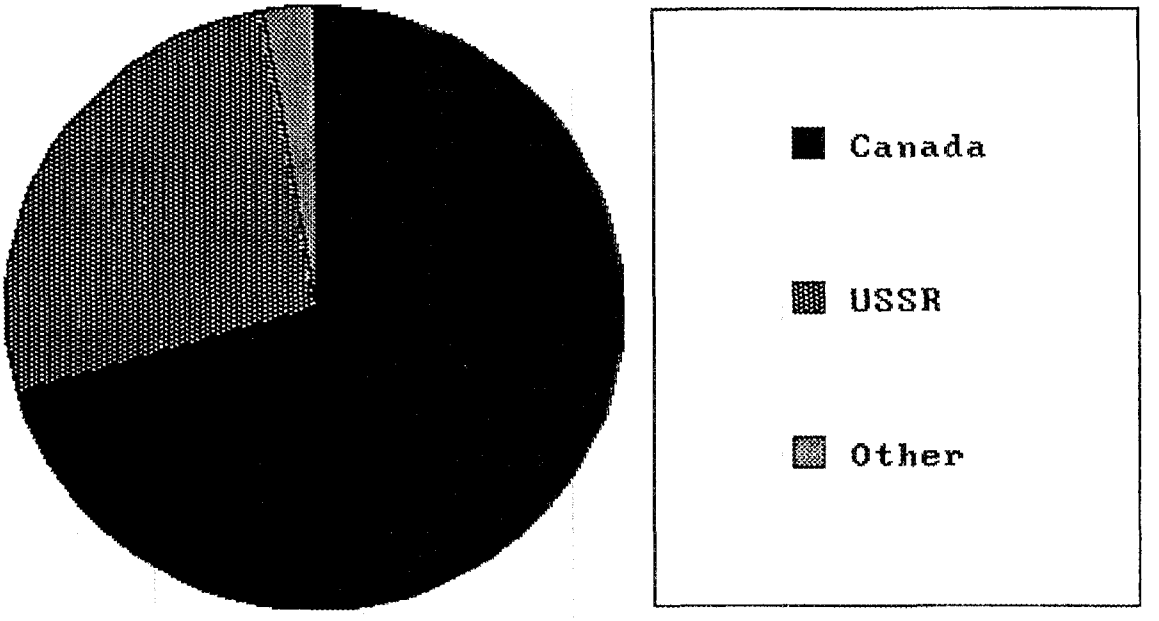

Fig. 2.1-6. World resources of bitumen. *Source:* Based on data from C. D. Masters et al., "World Resources of Crude Oil, Natural Gas, Natural Bitumem, and Shale Oil," *World Petroleum Congress,* Houston, 1987.

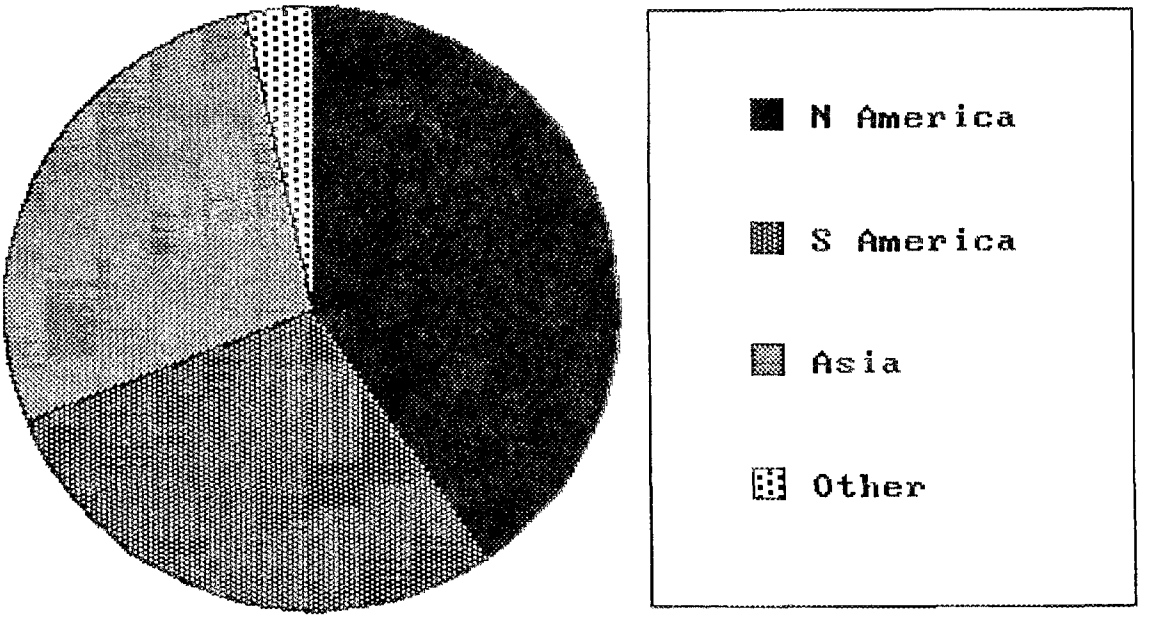

Fig. 2.1-7. World resources of oil shale. *Source:* Based on data from C. D. Masters et al., "World Resources of Crude Oil, Natural Gas, Natural Bitumem, and Shale Oil," *World Petroleum Congress,* Houston, 1987.

2.1.2.6 Enhanced oil recovery

An oil field is a porous geological formation that contains oil and natural gas. On the average, conventional recovery techniques recover about 34% of the original oil in place (OOIP). However, the recovery can range from 15% to 90%, and advanced techniques can recover more of the OOIP. As oil is discovered, the amount of undiscovered oil will become smaller than the oil that could be recovered by advanced techniques.

Over time, advanced techniques become widely adopted and are no longer considered to be advanced. For example, The 1984 NPC study on enhanced oil recovery (EOR) defines EOR to include chemical flooding, miscible flooding, and thermal recovery, but not to include water flooding.

In his 1987 paper, Fisher estimated that about 60% of the mobile oil originally in place will be recovered by conventional primary and secondary techniques. He argues that geologically targeted infill drilling (GTID) can recover more of the unswept mobile oil. In this section, we estimate the amount of oil that could be recovered in the United States from both EOR and GTID.

In the NPC study (1984), the ultimate recovery from current technology with a $30/barrel (bbl) price and a 10% discount rate was estimated to be 14.5 billion barrels (BB). Of the total, 45% was thermal recovery, 38% was miscible flooding (by carbon dioxide), and 17% was chemical flooding (by polymers, surfactants, and alkaline chemicals).

The NPC study (1984) reports estimates for higher prices and advanced technology. For current technology, the ultimate recovery increases from 7.4 BB to 19.0 BB as the price

increases from $20 to $50. For the advanced technology case, the ultimate recovery increases from 27.5 BB to 34.0 BB as the price increases from $30 to $50.

The NPC (1984) estimate of OOIP is 460 BB. Thus, the highest estimate of ultimate recovery (34.0 BB) is 7% of the OOIP. In two recent reports on the EOR potential in New Mexico and Oklahoma (IOCC 1986; IOCC 1987), the highest estimates of ultimate recovery were 5% of OOIP in New Mexico and 2% of OOIP in Oklahoma.

Fisher's (1987) estimate of the OOIP is 498 BB. The conventional ultimate recovery will be 34% (169 BB), implemented EOR will recover 3% (15 BB), unswept mobile oil is 16% (80 BB), and the remaining oil is 47% (239 BB). If we assume that 50% of the unswept mobile oil can be recovered by GTID or EOR, the EOR resource is 3% plus 8% of the OOIP for a total of 55 BB (see Fig. 2.1-8). At $20/bbl, the oil is worth $1100 billion. If the country spent 1% of the value of the oil on R&D, the R&D budget would be $11 billion.

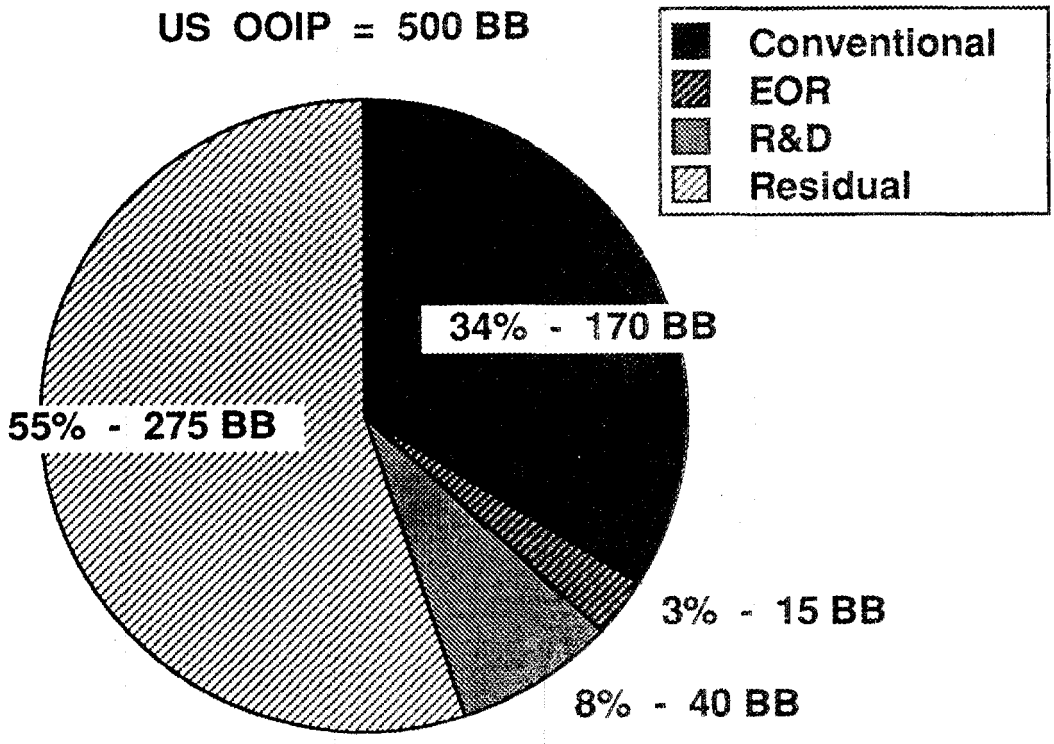

Fig. 2.1-8. Estimate of the enhanced oil recovery (EOR) resource (OOIP = original oil in place; BB = billion barrels). *Source:* Based on data, with permission, from W. L. Fisher, "Can the U.S. Oil and Gas Resource Support Sustained Production?" *Science* 236, 1631-36 (26 June 1987), copyright 1987 by the AAAS.

2.1.2.7 Conclusions

From the perspective of 1971, conventional oil and gas were being rapidly exhausted and the United States needed to mount a massive effort to develop (before 2000) a synthetic fuel industry based on coal and oil shale. From the perspective of 1988, we know that demand responds to price. The massive reduction in demand (compared with the 1971

forecasts) for oil and natural gas allows a slower transition to synthetic fuels based on coal and shale.

In 1988, we recognize that we have more options. The options include unconventional oil and gas, EOR, and GTID.

Because we have more time and more options, the synthetic fuel industry based on coal and shale may not become large until after 2030. Unless the U.S. government or the Organization of Petroleum Exporting Countries (OPEC) places high taxes on imports, we will become increasingly dependent on imported oil and gas.

Because the United States will exhaust its resources of conventional oil and gas before other regions of the world, we should play a leading role in the development of unconventional oil and gas, EOR, and GTID.

2.1.3 Oil and Gas R&D *(by D. B. Reister)*

This section reviews the R&D opportunities for oil and gas, including conventional oil, unconventional oil, oil shale, conventional gas, and unconventional natural gas.

2.1.3.1 Conventional oil and gas

This section discusses geologically targeted infill drilling (GTID), enhanced oil recovery (EOR), Arctic technology, deepwater technology, and horizontal drilling.

Geologically targeted infill drilling

As noted in Sect. 2.1.2.6, Fisher (1987) estimated that about 60% of the mobile OOIP will be recovered by conventional primary and secondary techniques. The remaining 40% of the mobile oil is not recovered because reservoirs are not homogeneous. Most of the remaining mobile oil could be recovered by drilling reservoirs on ever-closer well spacing and by completing wells at ever-smaller intervals. However, the random approach would require the drilling and completion of a large number of wells and would probably not be economical. After R&D, GTID can economically find and recover more of the unswept mobile oil.

In Sect. 2.1.2.6, we assumed that 50% of the unswept mobile oil could be recovered by GTID. Of the OOIP, conventional methods will yield 34%, implemented EOR will recover 3%, GTID will recover 8%, and 55% of the OOIP will remain in the ground.

Enhanced oil recovery *(by J. S. Watson)*

Both the likelihood of economic EOR operations and the EOR techniques used depend upon the particular field, its characteristics, and the location. When the field contains a very heavy oil such as that often found in California, recovery by conventional pumping may be very low, but increasing the temperature in the field can reduce the viscosity of the oil and increase the recovery. This approach to EOR is called thermal stimulation. The heat can be added via hot water, steam, or hot gases produced by combustion of a portion of the oil in the field. More than 90% of the thermal stimulation projects in the United States are in California, where heavy crudes are common (Holstein 1988). Total oil recovery by primary pumping plus thermal stimulation can exceed 50% of the available oil in the field. The cost of thermal stimulation can range from $3 to $18/bbl

(Holstein 1988), and many projects can compete effectively even with today's relatively low oil prices.

Another common and promising approach to EOR for some fields involves miscible gas flooding. Miscible gas is usually either a hydrocarbon mixture (natural gas) or carbon dioxide. Increased gas production can result from lowering the effective oil viscosity by the dissolved gas or even supercritical extraction by the gas. Hydrocarbon gas flooding is effective and economic where there is a large supply of available natural gas. Hydrocarbon flooding currently accounts for approximately 10% of the oil production in Alberta (Canada) and could reach 30% by 2010 (Torr 1988). One reason for the relatively extensive use of hydrocarbon gas flooding in Alberta is the availability of large supplies of natural gas associated with the production of oil and the expense of shipping the gas to relatively distant markets for other uses. In the Alaskan North Slope fields, the unused natural gas is also being injected back into the field and should increase the overall yield of oil.

In the contiguous United States, the lower availability of natural gas and the greater demand for the available gas makes hydrocarbon gas flooding less common. However, in the west Texas fields, carbon dioxide flooding is practical, and more than 60% of the gas flood projects in the contiguous states use carbon dioxide. The practical use of carbon dioxide results partially from nearby sources of underground supplies of carbon dioxide. The cost of carbon dioxide flooding can range from $10 to $23/bbl (Holstein 1988). Inert gases (nitrogen) can also be used for gas flooding (Hudgins and Chang 1988).

A number of other approaches to EOR can be grouped together and called chemical flooding. The approaches involve introducing chemicals into a water-flooded field to alter either the bulk or interfacial properties of the liquids. Polymers can be added to the water flood to increase the viscosity of the water. Polymers reduce the "fingering" that occurs when a less viscous fluid is used to displace a more viscous fluid. The fingering allows the water flood to bypass large portions of the oil without forcing it toward the production well. Surfactants can be used to alter the surface and wetting properties of the oil-water system. The lower surface tension reduces the capillary forces that oppose removal of oil from capillary regions of the field, and very high surfactant concentration can even trap oil in micelles that are more easily flushed from the field. These approaches are not well developed, and increased oil yields can be low and difficult to predict. The cost for polymer flooding can be relatively low, but the yield of additional oil can also be low, perhaps only an additional 5%. Degradation of the chemicals (surfactants or polymers) can be a problem. One estimate places the cost of surfactant flooding at between $15 and $30/bbl (Torr 1988).

A potentially important variation of chemical flooding is microbially enhanced oil recovery (MEOR), which is discussed separately in Sect. 2.4.2. In MEOR, surfactants, polymers, and/or other chemicals are produced by microorganisms within the field (in situ). The differences between MEOR and chemical flooding are not clear at this time, and MEOR should be considered less well developed than even chemical flooding.

The different approaches to EOR need not be used separately; combinations of approaches can also be used. For instance MEOR can involve the use of several chemicals produced by organisms rather than single chemicals. One particularly interesting approach uses gas flooding (carbon dioxide) with surfactants to produce foam flooding (Rossen 1988; Friedmann 1988; McPhee, Tehrani, and Jolly 1988). Gas and water/chemical additions may also be made alternately as well as simultaneously (Llave, Chung, and Burchfield 1988).

Research and development needs

Although numerous EOR projects are in operation or development both within and outside the United States (DOE 1986), these projects appear to be hampered by two common problems—low oil yields and uncertainties in the improved oil yields. Elaborate computer models have been developed to describe and predict the behavior of an EOR project, but these predictions can be greatly different from the results produced by the project. Our inability to predict how much oil will be produced by an EOR project clearly creates a serious risk to the field operator and limits the applications of EOR to those cases where the expected improvements are sufficient to take such risks. The uncertainties in the predictions result both from failure to understand details of the physical processes taking place in EOR operations and from failure to characterize the formation adequately. Research and development programs are currently addressing the chemistry involved in EOR operations, but quantitative descriptions of the flow patterns (fingering flow) have not been available. This bypassing of large portions of the oil in the field by the flood fluid probably accounts for the major portion of the oil retained within the formation and clearly is a phenomenon that needs better understanding. Known methods for reducing fingering include increasing the effective viscosity of the floodwater with polymers or of the flood gas by creating a foam. However, without quantitative descriptions of finger formation, it is not possible to say quantitatively how much these improvements will reduce oil retention. Not only is the amount of fingering and bypassing important, but the scale of the fingering can also be important. If the retained oil is in large pockets of the formation, the recovery approach may be different from the approach used when the oil is in relatively small regions with small bypass channels.

The second major problem important to essentially all approaches to EOR is the difficulties in characterizing the field. An oil field can be large and inhomogeneous. It can include layers of materials with different porosities and different chemical and surface properties. There may be numerous cracks or faults that channel flow or block flow. The major information about the formation comes probably from cores taken when the wells were drilled. In many cases, these cores have been retained and can be used later when EOR operations are considered. However, the wells may be far apart (especially for deep fields), and many changes in the properties could occur between wells. There are other methods such as acoustic measurements and tracer experiments to examine the structure and flow patterns in the field. However, the results are not always easy to interpret, and the interpretation may not be unique.

EOR is an especially attractive area for remote sensing research and development. The fields usually have several wells available from primary oil recovery which may be useful for placing sensors. These wells are usually spaced approximately along a grid pattern. The spacing between the wells in the grid may be too large for fine resolution of the field characteristics. It may be too expensive to drill additional wells for sensor placement except in the most shallow fields.

Arctic research

The Arctic areas of the United States are among the nation's most promising future sources of fossil fuel. In addition to the existing oil and gas reserves on the North Slope, Alaska contains large resources of undiscovered oil and gas and heavy oil and tar sands. However, discovery and production of these resources requires the development of

technologies that are appropriate for the harsh environment of the Arctic. The primary problems are permafrost onshore and ice offshore.

A recent report (OTA 1985) provides a review of Arctic technologies. The targets for R&D include (1) offshore structure design and artificial islands, (2) subsea pipelines, (3) polar-class tankers, (4) offshore terminals in the Arctic, (5) subice Arctic exploration and production, and (6) pollution control.

Deepwater technologies

The onshore areas of the contiguous states are the most densely explored and developed oil provinces in the world. Most of the undiscovered oil and gas in the United States is expected to be in offshore areas or onshore Alaska. As the shallow offshore regions are explored, the frontier moves into deeper offshore regions. From 1965 to 1984, technological progress increased the maximum water depth for exploratory drilling by an order of magnitude (from 632 to 6952 ft).

A recent report (OTA 1985) provides a review of deepwater technologies. Deepwater technologies must withstand environmental factors such as water currents, seafloor instability, mud slides, and hurricane-force winds and waves. The deepest water from which oil is currently being produced is 1025 ft in the Gulf of Mexico. The economic limit for fixed-leg platforms is about 1500 ft.

Beyond 1500 ft, the potential technologies include compliant and floating platforms, subsea wellheads, and submerged production systems. Industry experts generally agree that current technology can be extended to about 8000 ft without the need for major breakthroughs.

Horizontal drilling

Horizontal drilling technology is rapidly expanding because of benefits derived from improved drainage. A typical well starts at the surface and has a 5000-ft vertical section. At the bottom of the vertical section, the well has a right angle; the radius of the right angle can vary from 2 to 1500 ft. The horizontal sections can range from 500 to 1500 ft.

Horizontal drilling allows several wells to be drilled from a single offshore production platform and allows multiple completions in a single formation.

2.1.3.2 Unconventional oil

This section discusses heavy oil and tar sands. Heavy oil was also covered in the EOR section.

Heavy oil

The primary mechanism for the production of heavy oil is the application of heat. Heat can be supplied by steam flooding or by in situ combustion. The heat reduces the viscosity of the heavy oil and allows it to flow more easily to the producing well. For steam flooding, the heat is derived from steam injected from the surface or produced at reservoir depth by a downhole steam generator. Heat for the in situ combustion process is derived from igniting a portion of the oil in the formation. The thermal recovery processes for heavy oil are well-known commercial technology. In steam flooding, the overriding of steam

above the crude oil due to gravity differences has reduced recovery efficiency. Chemical additives might be able to reduce the overriding and improve efficiency.

Tar sands

Current commercial production of oil from tar sands is under way at the huge Athabasca deposit in northern Alberta, Canada. No more than 15% of the U.S. resource and 5% of the much larger Canadian tar sand resource is surface minable. Consequently, the majority of the resource will be produced by in situ extraction technologies.

R&D is directed toward understanding the fundamental chemical and physical properties of the U.S. tar sand resource and the thermodynamics and physics by which the bitumen constituents are mobilized and extracted from the mineral matrix.

2.1.3.3 Unconventional natural gas

The unconventional gas resource is large [on the order of thousands of trillion cubic feet (TCF)]. Unconventional gas includes tight sands, Devonian shales, and coal-bed methane. In this section, we also discuss secondary gas recovery technologies and advanced technology for exploration and production.

Tight sands

Tight sands occur in the form of blanket and lenticular formations. In both types of formations, the effects of a variety of interdependent parameters are still unknown and, consequently, the gas recovery rate and active reservoir life for a given field remain uncertain. To permit low-cost exploitation of the full potential of the tight sands resource base, the following specific technological issues need to be addressed: (1) determining the relationship between geologic and engineering parameters, (2) further characterizing of tight sands gas reservoirs and improving resource estimates, (3) identifying the parameters critical to formation evaluation and gas production, (4) understanding more clearly the mechanisms of hydraulic fracture propagation and control, (5) diagnosing fracture shape and downhole conditions using surface parameters, (6) providing real-time fracture treatment design changes, and (7) applying advanced technologies to currently noncommercial areas. Geotechnical and economic analyses have demonstrated that blanket-type formations are more amenable in the near term to research and technological advances in the areas cited above because the geological environments in which they exist are less complex than the environments associated with lenticular formations. The Gas Research Institute (GRI) performs R&D on blanket formations, while DOE concentrates on lenticular formations.

Devonian shale

The Devonian gas shales underlie 175,000 square miles of the eastern United States. More than 10,000 wells have been completed in Devonian shale formations since 1850. Two major factors constrain the exploitation of this resource: (1) the inability to predict production rates for wells drilled outside of historical production areas and (2) the inconsistent response of formations to current stimulation practices.

R&D objectives include (1) inadequate understanding of factors that control the flow of gas from Devonian shale formations, (2) the lack of effective exploration rationales,

(3) the need to improve diagnostic methods to assess the potential of productive zones, (4) inadequate understanding of shale gas reservoir dynamics, and (5) the lack of generally effective stimulation techniques.

Secondary gas recovery

The recovery of gas-in-place has traditionally been estimated to be in the 80 to 90% range. However, recent data have indicated that these estimates of recovery efficiencies are often too high. For example, recovery efficiencies for the prolific water-drive gas reservoirs along the Texas and Louisiana Gulf Coast are now known to be 50% or less. These poor recovery efficiencies result from the encroachment of water and the subsequent trapping of gas in water-drive reservoirs and from reservoir heterogeneities in more conventional reservoirs. Improved drilling, completion, and production techniques would have an immediate impact on gas recovery from these reservoirs.

To ensure the timely development of technologies for near-term production of bypassed gas and gas from undiscovered reservoir compartments, the following specific technological issues need to be addressed: (1) improving the understanding of geologic environments and characteristics of gas fields to allow for resource identification and estimates, (2) providing a methodology for cased-hole formation evaluation, and (3) developing in-field reexploration rationales based on an understanding of reservoir heterogeneities.

Methane from coal deposits

Natural gas is generated during the geologic process of coal formation. The resource in the United States is estimated by various agencies to be from 200 to 700 TCF of gas-in-place, with 100 TCF estimated to be economically recoverable. The major variations in the resource estimates are due to uncertainties in the gas content and recoverability of the gas from deep, unminable coal deposits in the West. The Piceance and San Juan basins in Colorado have approximately 180 coal-bed methane wells currently producing gas. In the East, over 285 wells now tap gas from the Black Warrior Basin coal fields in Alabama.

Although, in many cases, state-of-the-art technology is adequate for the production of gas from shallow, single-seam coal beds, advances in drilling, cementing and fracturing procedures, dewatering techniques, and delineation of reservoir mechanics are required to economically produce gas simultaneously from shallow, multiple seams or from coal seams deeper than 2500 ft. The principal constraint is the limited ability to effectively stimulate the wells to increase reservoir conductivity. Better understanding of coal-bed formation damage due to completion techniques and of the effects of natural fracturing is also critical to economic recovery of methane from coal seams. One environmental consideration is the disposal of the water produced concurrently with the gas. Other unresolved R&D issues include well design and spacing, coal fines production, well interactions, and multiple-zone completion techniques.

Geopressured methane

Brine containing dissolved methane, at moderately high temperatures and pressures, is common along the Gulf Coast. The estimated size of the economic resource is 270 to 2800 quads of methane and 160 to 1600 quads of heat. The DOE R&D program has

demonstrated that geopressured reservoirs can produce high-volume flows of brine saturated with natural gas over a long time period and that the gas can be separated and sold. Solutions to the engineering problems of brine handling and brine disposal have been demonstrated.

In Texas and Louisiana, approximately 1000 wells that are currently producing natural gas have been drilled through geopressured reservoirs. After the wells are no longer economical producers of natural gas, they could be recompleted as geopressured methane wells.

An interesting concept is to dispose of the hot brine by using it to water flood oil fields.

R&D issues include formulation of models for predicting well performance, definition of reservoir dynamics, and solution of the technical problems related to the production of geopressured brines.

Advanced technology for exploration and production

The cost of finding and producing natural gas can be reduced through the development of advanced technologies and techniques applicable to both tight formations and conventional natural gas formations. Specific R&D opportunities include exploration techniques, directional and deep drilling, well logging and testing, core analysis, new field practices, and advanced production instrumentation and modeling. These opportunities include making improvements to currently practiced technologies, developing lower cost or more accurate equipment, and the pursuit of novel or poorly understood concepts.

To improve exploration techniques, advances in surface prospecting methods are needed because existing seismic methods are relatively expensive and yield little information about the fluid contained in the rock. The objectives of drilling research include development of short- to medium-radius directional drilling methods, development of measurement while drilling hardware (smart drill), development of new materials for deep drilling (below 20,000 ft), and development of new drill bit designs. Advanced logging technology is needed to allow for more accurate identification of potentially productive zones. Advanced cased-hole logging tools are needed to identify gas zones in existing wells that were not selected for primary completion.

A better understanding of the geologic characteristics of fields and reservoirs is needed to develop methodologies for improved infill drilling.

2.1.4 Oil shale *(by D. B. Reister)*

After coal, oil shale is the most abundant fossil energy resource in the United States. The total resource of oil shale with a minimum of 25 gal of oil equivalent per ton of shale in the Green River Formation of Colorado, Utah, and Wyoming has been estimated at 600 BB. The resource of oil shale with 10 to 25 gal of oil per ton has been estimated at 1400 BB for the Green River Formation and 200 BB for the eastern shales.

Green River oil shale is not a shale but is actually a marlstone that contains solid organic material. The organic material is about 90% kerogen and 10% bitumen. Kerogen is composed of carbon and hydrogen molecules cross-linked together by sulfur and oxygen atoms to form relatively large three-dimensional macromolecules with molecular weights of about 3000. Crude shale oil (suitable for refining as a substitute for conventional crude oil)

is produced by heating raw shale rock to about 500°C. At high temperatures, the chemical bonds between the atoms of kerogen are ruptured and smaller molecules are formed.

Surface retorting of oil shale requires the handling of large volumes of solids (Fig. 2.1-9). At 25 gal/ton, the energy content of oil shale is less than 4 million Btu/ton. In contrast, the lowest grade of coal (lignite) has an energy content of about 14 million Btu/ton.

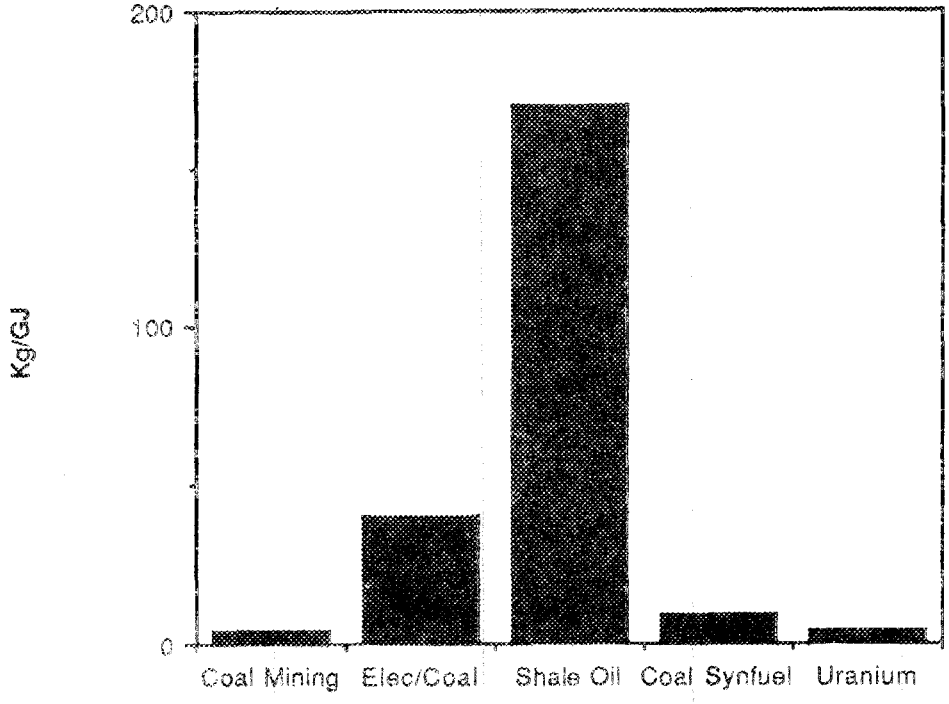

Fig. 2.1-9. Solid wastes for various energy forms (units are kg/GL). *Source:* Based on private communication data from G. D. Pine, Oak Ridge National Laboratory, Oak Ridge, Tennessee, Dec. 2, 1982.

Retorting shale decomposes the marlstone and produces carbon dioxide. Marland (1982) estimates that the CO_2 emissions (measured in kilograms of carbon per gigajoule) are 47.6 for shale oil, 35.8 for synthetic oil and gas from coal, 23.9 for coal, 19.7 for oil, and 13.8 for natural gas.

In 1980, Unocal began constructing a commercial-size oil shale project in Parachute, Colorado. Since that time, an underground mine, oil shale retorting complex, and upgrading facility have been constructed. The mine produces 13,500 tons of crushed ore per day. The "Unishale B" retort, the vessel where ore is heated to release the oil, is designed to produce 10,000 bbl of oil per day. The raw shale oil flows by pipeline to the upgrading facility, where it is converted to a premium-quality synthetic crude oil. The synthetic crude oil is transported to a conventional refinery where it is made into products such as gasoline, diesel oil, and jet fuel. In 1988, the plant operated for several months at 5000 to 6000 bbl/d at a production cost of $45/bbl.

The DOE program plan for oil shale has identified the following R&D options: studies of the physical and chemical properties of both Eastern and Western oil shales;

studies of process chemistry and kinetics; experimental studies on in situ retort concepts; systems analysis using the ASPEN computer model; analysis of novel concepts; development of a siting methodology; and environmental research on solid waste management, process water cleanup, in situ retort abandonment, and air emissions control.

2.1.5 Coal

2.1.5.1 Coal Resources *(by D. B. Reister)*

Coal is the most abundant fossil fuel. The resources of coal are compared with the resources of the other fossil fuels in Fig. 2.11 of Vol. 1. Coal is 71% of the total world fossil fuels and 73% of the United States total. The data source for the estimate of coal resources was the World Energy Conference (WEC 1986). Because judgment was used to derive the estimate, the details of our estimate are discussed in this section.

Our estimates are based on Table 1.1 of the WEC (1986) report. The table reports four estimates of coal resources and reserves: (1) proved amount in place, (2) proved recoverable reserves, (3) estimated additional amount in place, and (4) estimated additional reserves recoverable. To derive our estimate, we added categories 2 and 4 (proved recoverable reserves and estimated additional reserves recoverable).

The WEC (1986) report has estimates for three ranks of coal: (1) bituminous and anthracite, (2) subbituminous, and (3) lignite. Table 1.1 of the WEC report presents estimates for 76 countries. Our summary of world coal resources is displayed in Table 2.1-5, which focuses on the 9 countries with the largest coal resources.

Most of the values in Table 2.1-5 are taken from Table 1.1 of the WEC (1986) report. When estimates of recoverable reserves were not given but estimates of the amount in place were available, we assumed that the recovery rate was 50%. For the United States, a footnote states that an additional 1678 gigatonnes (GT) of coal could be placed in category 3, but it was not available by rank. The total classified by rank in the table was 827 GT. Thus, less than one-half of the total was classified by rank. To derive the estimates in Table 2.1-5, we assumed a recovery rate of 50% and that the distribution by rank for the 839 GT (1678/2 = 839) was the same as the distribution for the 827 GT.

The countries with the largest reserves of coal are China, the Soviet Union, and the United States. Unlike those of oil and gas, coal reserves in the Middle East are not large.

Using appropriate (and approximate) conversion factors, we can convert from mass units to energy units. The results are displayed in Table 2.1-5. The total amount of energy is 156,700 quads, and bituminous coal reserves are 60% of the total.

From 1976 to 1986, the world production rate for coal increased steadily from 67 to 88 quads/year. At a production rate of 100 quads/year, the coal reserves would last for 1567 years. From 1976 to 1986, the world production rate for all fossil fuels increased from 240 to 277 quads/year. At a production rate of 300 quads/year, the coal reserves would last for 522 years.

From 1976 to 1986, the world production rate for crude oil decreased by 1 quad/year, natural gas increased by 17 quads/year, and coal increased by 21 quads/year. Thus, coal has had the largest increase in production rate in the last decade.

Table 2.1-5. Recoverable reserves of coal
(gigatonnes)

Country	Bituminous	Subbituminous	Lignite	Total
Australia	267	58	113	
China	1,155	0	213	
Germany	117	0	56	
Great Britain	45	0	0	
India	56	0	4	
Poland	58	0	25	
South Africa	66	0	0	
Soviet Union	1,084	1,084	623	
United States	727	478	461	
Total	3,575	1,620	1,495	
Conversion factors, quads/GT	26.5	22.0	17.6	
Energy, quads	94,600	35,700	26,400	156,700

Source: Based on data from "Survey of Energy Resources," *World Energy Conference,* London, 1986.

2.1.5.1 Coal gasification emerging technologies and R&D needs *(by P. T. Carlson)*

Introduction

This section addresses the status of and R&D needs for coal gasification technologies. The discussion is limited to the application of gasification technologies for (1) the production of substitute natural gas (SNG), (2) the production of synthesis gas for the manufacture of a variety of chemicals and fuels, and (3) the generation of electrical power in gasification combined cycle (GCC) systems.

A large number of gasifiers are in use throughout the world today, and they can be divided into the following major categories: (1) fixed bed (dry ash and slagging types), (2) fluidized bed (dry ash and agglomerating types), and (3) entrained flow (slagging). The main operating characteristics of each type of gasifier are summarized in Table 2.1-6 (Penner 1987).

Table 2.1-6. Important characteristics of generic types of gasification reactors

Ash conditions	Moving bed		Fluidized bed		Entrained flow
	Dry ash	Slagging	Dry ash	Agglomerating	Slagging
Feed coal characteristics					
Size	Coarse (-2 in.)	Coarse (-2 in.)	Crushed (-1/4 in.)	Crushed (-1/4 in.)	Pulverized (-100 mesh)
Acceptability of fines	Limited	Better than dry ash	Good	Better	Unlimited
Acceptability of caking coal	Yes (with modifications)	Yes (with modifications)	Possibly	Yes	Yes
Preferred coal bank	Low	High	Low	Any	Any
Operating characteristics					
Exit gas temperature	Low (800-1200°F)	Low (800-1200°F)	Moderate (1700-1900°F)	Moderate (1700-1900°F)	High (>2300°F)
Oxidant requirement	Low	Low	Moderate	Moderate	High
Steam requirement	High	Low	Moderate	Moderate	Low
Key distinguishing characteristics	Hydrocarbon liquids in the raw gas		Large char recycle		Large amount of sensible heat energy in the hot raw gas
Key technical issue	Utilization of fines and hydrocarbon liquids		Carbon conversion		Raw gas cooling

Source: D. R. Simbeck, R. L. Dickenson, and E. D. Oliver, Synthetic Fuels, Inc., *Coal Gasification Systems: A Guide to Status, Applications, and Economics,* EPRI AP-3109, Electric Power Research Institute, Palo Alto, Calif., June 1983.

Coal gasification for the production of substitute natural gas

Introduction. In the early 1970s, serious concerns were raised regarding the extent of natural gas reserves and the long-term availability of this resource. As a result, more than 100 major projects or plants were under consideration that would generate a substitute natural gas (SNG) from coal. Some of these projects were on schedules that would result in substitute natural gas production in the mid- to late-1980s. The changing world energy picture since that time, however, has reduced the immediate need for the production of pipeline-quality gas from coal (Penner 1987).

Advanced Gasification Technologies for SNG. In the 1970s, over twenty conversion processes were in various stages of development in the United States to convert coal to SNG. Each of the processes was conceived to improve the commercially available technologies with respect to process efficiency, feedstock utilization, and flexibility. As more data from these R&D efforts were obtained and more detailed economic evaluations were performed, it was determined that sufficient economic incentives could not be identified to warrant continued work and expenditure of research funds on the production of SNG from coal. The processes for which research and development work is still being pursued are the (1) ash-agglomerating, fluidized-bed process, (2) British Gas/Lurgi slagging gasifier, and (3) Rheinbraun direct, fluidized-bed hydrogasification process. For the most part, continued development work is justified on these processes primarily because of process flexibility and the potential for application of the technology in areas other than SNG production (e.g., in gasification combined-cycle systems for electric power generation).

Great Plains Coal Gasification Plant. The economics of producing SNG from coal are a function of coal type and cost, the technologies used in the conversion process, and the specific economic constraints of the site chosen for the plant. As a consequence of the changing world energy market, most of the 100 projects or plants considered in the mid-1970s are no longer under consideration. Only the Great Plains Coal Gasification Plant (GPCGP) in Beulah, North Dakota, was constructed through the combined efforts of a consortium of natural gas companies and the federal government.

GPCGP was started up in 1984 with a nominal output of 125 million standard cubic feet per day (scf/d) on pipeline-quality gas. The feedstock for this plant is North Dakota lignite. GPCGP has been highly successful in terms of its design purpose to produce substitute natural gas. The plant was designed to produce 137.5×10^6 scf/d of SNG, but it has operated at levels consistently exceeding the design capacity. The highest daily rate (in March 1986) for SNG production was 154.7×10^6 scf, which is 112% of the design capacity. In the current world economic climate resulting from low oil prices, however, GPCGP is not economically competitive with other gas-supply options. The Department of Energy (DOE) became the owner of the plant in 1985 when the five industrial partners defaulted on the government loan, and DOE is currently attempting to sell the plant to ensure long-term operation.

Direct methanation. Since 1978, the Gas Research Institute (GRI) has funded research and development of the direct methanation process to improve the economics of the conversion of coal to SNG. Direct methanation is a process that converts equimolar concentrations of hydrogen (H_2) and carbon monoxide (CO) to methane (CH_4) and carbon dioxide (CO_2). The process has no requirements for steam, and sulfur removal is not required prior to methanation. As a result, the direct methanation process can be used to treat the raw, quenched gas from a gasifier with little or no pretreatment.

Acid gas removal. An essential element of the coal-to-SNG process is the removal of gases such as CO_2 and hydrogen sulfide (H_2S) and organic sulfides from the product stream to satisfy process constraints, environmental constraints, or product requirements. The extensive list of available commercial technologies for the removal of acid gases from product gas streams has resulted in only a limited R&D effort in the pursuit of new processes for the removal of acid gases that could improve the economics of SNG production from coal.

R&D needs. If at some point in the future, natural gas supplies and costs are such that the production of SNG from coal becomes an economically viable alternative, the following R&D areas need attention.

- metal alloys for high-temperature heat-recovery applications;
- improved ceramics for high-temperature applications, such as particulate filters and valves;
- additional information on the erosion-corrosion behavior and resistance of metals and ceramics in coal gasification environments, including long-term corrosion data;
- vapor-liquid equilibrium data at elevated temperatures and pressures for selected multicomponent systems involved in the SNG process;
- transport data (thermal conductivities, viscosities, and diffusivities) for tars and slurries; and
- thermodynamic data, including improved estimates for free energy of formation, heats of formation, entropies, and specific heats.

Coal gasification for the production of synthesis gas for chemicals and fuels

Overview of technology. Coal was the first fossil fuel to be converted to synthesis gas (SG) for commercial use. The manufacture of methanol from coal-derived SG began in Germany in 1923. That same year, the Fischer-Tropsch process was put into commercial operation for the manufacture of fuels and chemicals from coal-derived SG. The production of methanol throughout the world, for the most part, uses natural gas as the starting material; although, with the shortages of natural gas in Europe, petroleum fractions have also been used for the production of SG. Following the oil embargo of 1973-74, the gasification of coal became an important source of SG; however, the recent decline in oil and gas prices has resulted in a decrease in R&D activities in this area. Nonetheless, the instability of the oil and gas markets is a good reason for continuing R&D in the gasification of coal for the production of SG.

Gasification processes are excellently suited to the production of SG for subsequent conversion to liquid fuels. Variability in coal source, rank, mineral matter, and other factors is more easily accommodated by gasification processes than by liquefaction processes. Indirect liquefaction (by way of SG) products are converted relatively easily into clean gaseous and liquid fuels and to chemicals. Plants designed to produce SG by the gasification of coal are, however, more costly and complex than facilities designed to produce SG from natural gas because of the additional facilities needed to handle the coal, solid residues, and the extensive cleanup of resultant gases.

The gasification of coal is also valuable in the production of chemicals and feedstocks. Gasification processes produce CO_2 in significant amounts, and this product is one that is in short supply and has an increasing number of uses. It is considerably easier to remove CO_2 from gasification processes than it is to remove it from flue-gas streams, and current R&D efforts should focus on ways to remove this chemical in a fairly pure state from gasification processes. Applications for CO_2 include (1) use in enhanced oil recovery operations, synthesis of urea (ammonia and fertilizers), synthesis of polymers, refrigeration, carbonation of beverages, and many others.

Several plants worldwide use coal gasification to produce SG for fuels and chemicals. The Tennessee Eastman plant in Kingsport, Tennessee, has been in operation since 1983. Tennessee Eastman uses two 900-ton/d Texaco gasifiers to produce acetic anhydride, acetic acid, and methanol. The coal-to-ammonia plant in Ube, Japan, has been in operation since 1984, producing 1000 tons/d of ammonia. In this plant, four Texaco gasifiers have been connected to an existing ammonia plant to generate the necessary H_2 for the NH_3 production. The Rheinbraun High-Temperature Winkler process plant in the Federal Republic of Germany (FRG) is a 700-ton/d demonstration plant that started up in 1986 for the production of SG for methanol production. In addition, the 820-ton/d Ruhr Kohle plant in FRG was started in 1986 and generates SG for oxychemical production.

R&D needs. It is believed by some (Penner 1987) that coal gasification will be an important contributor to the production of clean liquid fuels by 2010. If this is an accurate prediction, the following R&D need attention (Penner 1987).

- additional research on the synthesis of ethanol from SG for use in transportation applications;
- increased understanding of the conditions and catalysts necessary for the production of certain alcohols that can be used in transportation applications;
- methods for separating CO_2 from coal gasification processes with fewer than 10 ppm H_2S;
- studies to identify major potential cost savings resulting from integration of the gasifier with downstream processing and studies to examine oxygen purity requirements to minimize costs of overall process;
- improvements in low-temperature, water-gas-shift efficiencies and economies to make either high-H_2/CO SG or H_2 by minimizing excess steam requirements;
- exploration on homogeneous and heterogeneous methanol synthesis catalysts; and
- development of synthesis gas conversion catalysts that can tolerate higher feed impurities (S compounds, for example).

Coal gasification combined cycle technologies

Introduction. The world energy situation in the past several years, with regard to the consumption of petroleum-based fuels, has resulted in increased attention being focused on the economical use of coal. Coal, although one of the nation's more abundant energy resources, is difficult to consume in an economical and environmentally acceptable fashion. Current strict environmental controls have resulted in substantial increases in both capital and operating costs for conventional coal-fired steam plants, while at the same time lowering plant efficiency and reliability. The types of coal feedstocks that can be burned

cleanly and yet produce a sufficient level of electrical power economically are limited. The higher costs and uncertainty of supplies of oil and gas result in oil- and gas-fired steam plants being less attractive economically than conventional coal-fired plants. Oil- and gas-fired combined-cycle plants, however, have several advantages. First, they are characterized by extremely high fuel efficiencies because of the operating temperatures of the combustion turbines. Second, they have relatively low capital costs and short construction times. Third, they are extremely responsive to load-following requirements because of the high rate of maneuverability of the combustion turbine. The major disadvantages, however, are the high costs associated with the use of oil and natural gas fuels and the uncertainty of supplies of these fuels.

The concept of a gasification combined-cycle (GCC) plant developed as a way of combining the attractiveness of using coal, a low-cost and available fuel, and the high efficiency and operability of the combined-cycle system. In addition, the GCC concept allows for a modular approach to construction that permits the addition of gasifiers and turbines to match power requirements. In the GCC system, coal is converted to a combustible fuel gas through the gasification process. The fuel gas is cleaned and burned in a gas turbine to produce power. Thermal energy from the gas turbine exhaust and from the gasification process is converted to steam and used to produce power in a steam turbine (Simbeck, Dickenson, and Oliver 1983).

With regard to the economy and efficiency of GCC systems, this process offers several advantages over conventional coal-fired steam plants. First, the GCC design is capable of operating with a wide range of coal types and quality. Second, the GCC plant produces H_2S from elemental sulfur in the coal feedstock through the gasification process. After separation, low-sulfur fuel gas that can be injected directly into a gas turbine for power production. Third, steam produced from waste heat from the gasification process and the gas turbine can be used for additional power generation (*A Review of Coal Gas Efficiencies Among Various Coal Gasifiers,* Oak Ridge National Laboratory, Oak Ridge, Tennessee, unpublished paper, March 1988).

GCC systems have several environmental advantages. GCC systems have the capability of removing sulfur and nitrogen compounds from the fuel gas, which provides flexibility for the utility to purchase lower rank, and perhaps more available, high-sulfur coals. Also, GCC systems are conceptually capable of particulate removal to levels below current emission control requirements. Because approximately 60% of the power in a GCC is generated by the combustion turbine, which requires no cooling water, significantly less water is required in a GCC plant than in a coal-fired steam plant (Simbeck, Dickenson, and Oliver 1983).

The Cool Water Coal Gasification Project (CWCGP) is a 100-MW(e) GCC plant located in Daggett, California. The CWCGP uses two 1000-ton/d Texaco gasifiers and has operated successfully since 1984. During its operation, the plant has demonstrated the ability to operate within the stringent California environmental standards using both low-sulfur western coal and high-sulfur eastern coal. The 2400-ton/d Dow Syngas Project in Plaquemine, Louisiana, has the distinction of being the world's largest GCC plant. The design uses an entrained-flow slagging gasifier that began operation in 1987. The status of other gasifiers being demonstrated for combined-cycle technology is summarized in Table 2.1-7.

Table 2.1-7. Status of gasifiers being demonstrated for gasification combined cycle

Plant/technology	Location	Status
Kellogg-Rust-Westinghouse (KRW)	Waltz Mill, Pennsylvania	270-ton/d demonstration plant
British Gas/Lurgi Slagging Gasifier	Westfield, Scotland	550-ton/d demonstration plant; 30-MW gas turbine; in operation since 1986
Prenflo (Krupp-Koppers)		48-ton/d pilot plant; testing began in 1986
High-Temperature Winkler	Berrenrath, Federal Republic of Germany	700-ton/d; began operation in 1986

The four major components of the GCC system are (1) the coal gasifier for conversion of the coal feedstock to a fuel gas, (2) the hot-gas cleanup system to prepare the gas for injection to the gas turbine and to reduce the emission to the environment, (3) the gas turbine for production of power, and (4) the steam turbine for the conversion of recoverable waste heat to power. Each of these components is discussed in this section.

Coal gasifier. Current GCC systems use one of three principal gasification processes: (1) entrained bed, (2) fluidized bed, and (3) fixed bed. A summary of these gasification processes is shown in Table 2.1-8. The Lurgi, Koppers-Totzek, and Winkler gasification processes are generally considered to be first-generation processes. The second-generation gasification technologies include the British Gas Corporation Slagging Lurgi (BG/SL), Shell, Texaco, Dow, Westinghouse, and U-Gas gasifiers (Marqueen, Carbone, and Ligammari 1986).

Current research efforts are focused on ways to broaden the range of coal types that can be used economically and cleanly in the gasification scheme. While it is true that the coals that can be gasified include lignite, sub-bituminous, bituminous, and anthracite, most of the major gasification processes use bituminous coals. It is important to widen the available coal types that can be used in gasification systems to include lower rank coals, in view of the nation's overall coal reserves and also the practicality and economy of using gasification schemes in locations with limited or inferior coal reserves.

Table 2.1-8. Generic classification of available gasification technologies

Process system	Fixed bed		Fluidized bed		Entrained bed	
	Dry	Slagging	Dry ash	Agglomerating	Slurry feed	Dry feed
Gasification technologies	Lurgi[a]	BG/SL[b]	Winkler	Westinghouse U-GAS (IGT)	Texaco Dow	GKT[a,c] Shell
Preferred coal rank	Low	High	Low	Any	Any	Any
Operating characteristic						
• Exit gas temperature	Low (800-1000°F)		Moderate (1600-1800°F)		High (2300-2700°F)	
• Oxygen requirements	Low		Moderate		High	
• Coal feed	Sized		Pulverized	Pulverized		
Distinctive characteristics	Liquid hydrocarbons in raw gas		Char recycle		Large quantity of inlet coal energy leaves as heat energy	

Source: Based on data from J. Marqueen, D. J. Carbone, and J. Ligammari, "Coal Gasification Combined Cycle Systems—Technical Horizons," pp. 235-41 in Vol. 48, *1986 Proc. Am. Power Conf.,* Chicago, with permission from Illinois Institute of Technology, Chicago, 1986.

[a]First-generation technologies.

[b]British Gas Corp/slagging Lurgi.

[c]German Koppers-Totzek.

Three additional areas of current research are intimately connected: (1) increasing the efficiency of the coal gasification process, (2) reducing the complexity of the gasifier product (fuel gas) treatment, and (3) reducing the emission of gasification products to the environment.

The coal gasifier is extremely important in the overall GCC system because it is the component that determines the composition of the fuel gas for the gas turbine and the level of efficiency of conversion of the coal feedstock to fuel gas and thermal energy. Most gasifiers convert virtually the same total percentage (≈94%) of feed coal energy to fuel gas (≈80%) and thermal energy (≈14%). With little difference in efficiency among the various gasifiers, the particular choice of gasifier for a GCC system tends to be based more on the quality and availability of the coal feedstock and other economic and political considerations. The important factor is the operating temperature of the gasifier. As the operating temperature of the gasifier decreases, the amount of energy generated as fuel gas increases. It is the amount of energy generated as fuel gas that ultimately determines the efficiency of the overall gasification combined-cycle process. It is desirable that a high percentage of coal energy be converted to fuel gas because the fuel gas can be converted directly to power through the gas turbine, whereas that portion of the coal energy that is converted to thermal energy must be converted to steam before it can be converted to power. Because the conversion of fuel gas to power is more efficient than the conversion of thermal energy to power, the design objective for GCC systems is to maximize the production of fuel gas.

In addition, higher operating temperatures reduce the fraction of coal energy that can be made available to the gas turbine because the higher operating temperatures result in more feed coal combustion to raise the reactants to the gasifier operating temperature. Increased temperatures also result in increased oxygen consumption and increased equipment costs to recover heat generated in the gasifier. Furthermore, increasing the operating temperature of the gasifier results in increased coal throughput, and reduces the level of hydrocarbons in the resultant fuel gas. On the other hand, higher operating temperatures result in simpler and less expensive gas cleanup systems.

Consequently, it can be seen that there is a delicate balance for the operating temperature of the gasifier for an efficient GCC plant. Fixed-bed gasifiers operate at lower temperatures but require extensive gas cleanup operations. The two extremes for conventional gasification processes with regard to operating temperatures are fixed bed (product gases at 800 to 1000°F) and entrained bed (product gases at 2300 to 2700°F). Ideally, the gasifier should produce gas at a temperature at which it can be delivered to the turbine and at which components deleterious to the turbine can be removed. Optimizing the operating temperature of the gasifier to produce a high-quality, combustible, clean fuel gas without negatively impacting the overall economy of the process through large capital expenditures for gas cleanup is the area of greatest potential for improvement in the gasifier portion of the GCC system. There is a trend toward the use of fixed-bed gasifiers that convert a greater percentage of the coal to fuel gas. For example, 95% of the coal energy to the BG/SL gasifier is used directly in the gas turbine, and a 10% increase in gas turbine efficiency results in a 5% increase in system efficiency. Fluidized-bed systems have the greatest potential for using developments in hot-gas cleanup and gas turbine technology to effect an overall improvement in the viability of gasification combined-cycle technology (Marqueen, Carbone, and Ligammari 1986).

Hot-gas cleanup system. The principal purpose of the fuel gas generated by the gasifier is to provide a combustible fuel for the gas turbine for the production of electrical power. Even with the most advanced gasification schemes, the sulfur and nitrogen compounds and the particulates in the fuel gas as it exits the gasification process are highly deleterious to the materials in the combustion turbine. Failure to provide the turbine with a clean, nonabrasive fuel will result in expensive turbine blade and component replacement and costly downtimes for the overall GCC plant. In addition, failure to remove the oxides of sulfur and nitrogen from the gas stream will result in an unacceptable environmental impact. A hot-gas cleanup system, therefore, is an integral part of the GCC plant.

As discussed in the next section, optimum turbine efficiency is attained at higher firing temperatures. To ensure high efficiency in the gas turbine operation, it is desirable to clean the gases exiting from the gasifier at high temperatures to reduce the amount of cooling necessary to clean the gases with subsequent reheating for optimum turbine operation. Current operating costs of systems required to cool and remove the impurities to turbine specifications from hot product gas streams represent approximately 15 to 20% of the operating costs of a GCC plant. Research in the area of high-temperature particulate removal will accomplish a great deal in lowering the operating costs for GCC plants and, thereby, increase the cost-effectiveness of the technology. Effective hot-gas cleanup systems will reduce costs for the removal of sulfur from the fuel gas and will eliminate expensive gas cooling and reheating equipment.

The temperature at which the gas cleaning can be done will depend on the limitation of the materials and components in the fuel gas handling, heat recovery, and gas cleaning system. However, performance improvements resulting from hot-gas cleanup will require the gas to be delivered to the turbine at higher temperatures than those currently planned for GCC plants. Current turbines can accept fuel gas at turbine inlet temperatures up to 1000°F. Improvements in the materials of the fuel-handling system have the potential to raise the turbine inlet temperature to between 1200 and 1400°F. In addition to more usable fuel gas from the gasifier, hot-gas cleanup will result in additional thermal energy for generation of electrical power through the steam turbine system.

Resolution of problems surrounding the integrated high-temperature sulfur, nitrogen, and particulate removal will result in the most economical GCC systems. For example, a 3.6% increase in system efficiency can be realized by changing from a cold- to a hot-gas cleanup system with an attendant increase in the temperature of the fuel gas into the combustor from 810 to 1100°F (Stochl and Nainiger 1983).

Gas and steam turbines. The principal component of the GCC system is the gas turbine because it determines the efficiency for conversion to electrical power of the fuel gas delivered by the gasification process. Current, simple-cycle turbines with firing temperatures of 2000°F have efficiencies of approximately 32 to 33% high heating value (HHV), and with the recovery of exhaust heat (combined cycle), the efficiencies can approach 45%. Improved designs for combustion turbines with firing temperatures of 2200 to 2300°F have anticipated efficiencies of 34 to 35% in simple-cycle and 48% in combined-cycle operation (Marqueen, Carbone, and Ligammari 1986).

Improved turbine efficiency will have the greatest impact in those GCC systems whose gasifiers convert the greatest fraction of coal energy to fuel gas. For example, as can be seen from Tables 2.1-9 and 2.1-10, the BG/SL gasifier has the highest fraction of conversion of coal energy to fuel gas (89.35%) and also the greatest amount of combined-cycle power (435.31 MW) of the four GCC systems examined (Texaco, Shell, Westinghouse, and BG/SL) (Marqueen, Carbone, and Ligammari 1986).

Additional increases in GCC system efficiencies can be expected as a result of the higher steam superheat capabilities of turbines with firing temperatures in the 2200 to 2300°F range. Increasing steam superheat temperatures from 950 to 1000°F can improve the performance of the steam-bottoming cycle by as much as 3% and represents a 1% improvement for the GCC system. It should be noted that research on improved materials for superheaters and reheaters for advanced steam cycle systems will allow the use of increased exhaust temperatures from turbines firing above 2200 to 2300°F. A recent study (Stochl and Nainiger 1983) to evaluate the effects of gas turbine firing temperature and cooling scheme on overall system efficiency showed that gas turbine (and steam turbine) efficiencies are the most important parameters in the overall efficiency of the GCC system. (The overall system efficiency is more sensitive to changes in steam turbine efficiency in those cases where sizable fractions of the raw gas thermal energy is used to raise steam for the steam turbine.) The performance of the gas turbine can be improved by increasing the firing temperature in conjunction with advanced blade cooling techniques. It is important, however, to ensure that cooling not be severe enough to affect turbine efficiency (Stochl and Nainiger 1983).

Table 2.1-9. Equivalent energy recovery of fuel gas plants

	Gasifier output[a]		Internal fuel plant requirements		Gross fuel plant power generation	Net fuel plant products		Heat equivalent of net power product	Equivalent energy recovered
	Fuel gas	Thermal	Fuel gas[a]	MW	MW	Fuel gas[a]	MW	Heat[b,c]	Heat[b,d]
Texaco	75.93	18.45	6.27	71.32	105.32	69.66	34.00	7.34	77.00
Shell	79.56	14.94	6.14	68.69	86.80	73.44	18.11	3.91	77.35
Westinghouse oxygen blown	80.84	13.73	5.85	56.67	47.79	74.99	11.80	2.57	76.34
BGC/SL[e]	89.35	5.70	3.86	48.10	13.83	85.49	(34.27)	(7.4)	78.09

[a]Percent of coal energy to gasifier.
[b]Coal energy input (100 = 10^9 Btu/d) Illinois #6 coal.
[c]Based on heat rate of 9000 Btu/kWh.
[d]$\frac{\text{EER} - \text{B* Btu/d fuel gas} + \text{B* Btu/d equivalent of power}}{\text{B* Btu/d coal energy input}}$ (Note: EER = energy efficiency ratio).
[e]British Gas Corp./Slagging Lurgi; steam import 54,500 lb/h.
Source: Based on data from T. J. Marqueen, D. J. Carbone, and J. Ligammari, "Coal Gasification Combined Cycle Systems—Technical Horizons," pp. 235-41 in Vol. 48, *1986 Proc. Am. Power Conf.,* Chicago, with permission from Illinois Institute of Technology, Chicago, 1986.

Table 2.1-10. Gasification combined cycle performance
[coal input (100 x 10^9) Btu/d]
Illinois #6 coal

Gasifier	Net fuel plant products		Power production			
			CC EFF[a]	45%	CC EFF[a]	48%
	FG[b]	Power	CC	Total	CC	Total
	B* Btu/d	(MW)	(MW)	(MW)	(MW)	(MW)
Texaco	69.66	34.00	382.81	416.81	408.32	442.32
Shell	73.44	18.11	403.59	421.70	430.25	448.36
Westinghouse	74.99	11.88	412.11	423.99	448.72	460.60
BGC/SL[c]	85.49	(34.27)	469.58	435.31	501.15	466.88

[a]CC EFF = Combined cycle energy efficiency ratio.
[b]FG = fuel gas.
[c]BGC/SL = British Gas Corp./Slagging Lurgi.
Source: Based on data from T. J. Marqueen, D. J. Carbone, and J. Ligammari, "Coal Gasification Combined Cycle Systems—Technical Horizons," pp. 235-41 in Vol. 48, *1986 Proc. Am. Power Conf.*, Chicago, with permission from Illinois Institute of Technology, Chicago, 1986.

A 10% change in steam turbine efficiency results in a system efficiency increase between 5 and 6%. High steam throttle conditions, along with steam reheat and steam induction, will result in maximum steam turbine power from recoverable thermal energy (Stochl and Nainiger, 1983).

R&D needs. To increase the contribution of the GCC technology to the nation's power production, research in the next decade should be focused in the following areas.

- Development of advanced gasification processes that have (1) increased efficiency of conversion of coal energy to fuel gas and thermal energy, (2) increased ratios of fuel gas to thermal energy in the product balance, and (3) the ability to operate at temperatures sufficiently low to produce a maximum percentage of fuel gas without reducing the efficiency of the GCC system.
- Development of improved hot-gas cleanup systems through the use of advanced materials for the components of the entire fuel gas-handling and cleanup module. Improved systems should be capable of removing particulates to levels compatible with the design requirements of the gas turbine. The hot-gas cleanup system should operate at temperatures approaching the gas turbine inlet temperature to avoid loss of efficiency in the overall GCC system.
- Development of turbine designs with higher inlet temperatures for increased efficiency of conversion of fuel gas energy to electrical power. In addition, higher turbine operating temperatures can be expected to result in increases in the GCC system efficiencies through higher steam superheat capabilities.

- Development of materials for advanced, more efficient steam turbine, steam reheat, steam superheat, and steam induction systems to obtain maximum steam turbine power from recoverable thermal energy from the gas turbine and the gasifier.
- Research on slagging for improved methods of predicting fouling: (1) predictions of slag viscosity under gasifier conditions, (2) phase diagrams for binary, ternary, and higher order mixtures for improved understanding of wall-and tube-deposit formations, and (3) use of improved diagnostic techniques to verify or improve fundamental understanding of gasification rates and mechanisms (Penner 1987).
- Measurements of high-temperature corrosion-fatigue for alloys under realistic conditions and on the kinetics and mechanisms of corrosion-fatigue damage in the temperature range 350 to 700°C and pressures of 20 to 60 atm (Penner 1987).

2.1.5.3 Coal liquefaction *(by R. R. Judkins)*

Direct liquefaction

A variety of direct liquefaction processes have been (and are being) developed in the United States and in other parts of the world. These processes include pyrolysis, solvent extraction, and catalytic liquefaction. Most of the development has been in direct liquefaction—the dissolution and hydrogenation of coal at elevated temperatures (800 to 850°F) and pressure (1500 to 3000 psi), both with and without catalysts.

Of the potential processes for producing liquid fuels from coal, direct liquefaction is the most advanced in the United States. During the period 1974-82, four liquefaction pilot plants were operated and demonstrated the feasibility of direct liquefaction processes. One of these, the Wilsonville Advanced Coal Liquefaction Research and Development Facility, remains in operation today. Summary information about these plants is presented in Table 2.1-11.

These plants successfully demonstrated the feasibility of the various processes, and demonstration and commercial plants using these processes were planned. Demonstration plants (6000 tons/d) for the SRC-I and -II processes and a commercial plant (26,500 tons/d) for the H-Coal process were designed and planned for construction, but they were never built.

For the four processes discussed above, the final phase of R&D needed is the construction and operation of demonstration plants of about 6000-ton/d capacity, that is a single train of a commercial-sized facility. On the basis of the results of pilot plant operations, plants of this size could be built and operated successfully. Successful demonstration at this scale would ensure the ability to scale up to commercial size (30,000 tons/d) when the need for commercial-size plants arises.

A need exists to continue laboratory- and pilot-plant scale R&D of advanced direct liquefaction processes. These advanced processes include developments such as the integrated two-stage liquefaction process currently being used at the Wilsonville, Alabama, facility. These advanced processes apparently offer considerable benefits in efficiency compared with the four processes that have been operated at pilot plant scale.

Table 2.1-11. Direct liquefaction pilot plants

Process[a]	Location	Size (tons/d)	Operating period	Products
SRC-I	Wilsonville, Ala.	6	1974-present	Solid SRC[a]
ITSL	Wilsonville, Ala.	6	1981-present	Fuel oil Light distillate
SRC-II	Fort Lewis, Wash.	50	1974-81	Fuel oil Light distillate Gas
H-Coal	Catlettsburg, Ky.	250	1980-82	Crude oil Gas
EDS	Baytown, Tx.	250	1980-82	Gasoline blend stock Heavy fuel oil Distillate fuel oil

[a]SRC - Solvent Refined Coal.
ITSL - Integrated Two-Stage Liquefaction.
EDS - Exxon Donor Solvent.

A recent paper (Lumpkin 1988) reviewed recent progress in the direct liquefaction of coal. Over the past 50 years, the trend has been toward milder operating conditions (lower pressure and temperature). The conversion of coal into products has remained constant at about 95%. Hydrogen consumption has decreased because the production of methane decreased at the milder operating conditions.

Since 1983, the quantity and quality of the liquid products have increased. The heavier liquids (residual oil and gas oil) have been eliminated by recycling. The current liquid products are distillate fuel oil, kerosene, and gasoline.

The increase in quantity and quality of the liquid products without an increase in hydrogen consumption has improved the economics of the process. The current process would be cost-effective at a crude oil price of $35/bbl. With the same assumptions, the 1983 process would have required a crude oil price of $87/bbl. Thus, R&D has reduced the cost of the direct liquefaction process by 60% this decade.

Further progress is possible. Given the composition of an average coal, the upper bound on liquid fuel is reached when all of the oxygen in the coal is converted to carbon dioxide, all of the sulfur and nitrogen are converted to hydrogen sulfide and ammonia, and the liquid fuel is gasoline. Because the upper bound is about 25% higher than the current yield, R&D will probably result in processes with significantly higher yields of light liquid fuels.

Current laboratory R&D on coal liquefaction processes focuses primarily on improved catalysts that will permit efficient liquefaction of coal under much milder conditions than the older processes. A considerable research effort on these improved catalysts is being conducted under the DOE Advanced Research and Technology Development (AR&TD) Coal Liquefaction Advanced Research subprogram. This type of research effort is appropriate and should be continued. A demonstration plant based on the most advanced technology should be included in the planning for future development of direct coal liquefaction processes.

Less expensive coals, easier-to-liquify coals, and evolutionary improvements such as recycle to extinction of heavy liquids and modifications to equipment or operating conditions will likely lead to a 15 to 20% cost reduction. Breakthroughs in technology could have much more significant impacts on the cost of liquid fuels produced from coal. The use of gases such as carbon monoxide and water or methane to transfer hydrogen to coal could significantly reduce the cost of coal liquids. Improved and more selective catalysts that would maximize the yields of desired products would reduce costs. A better understanding of coal structure could lead to the identification of reagents that are more appropriate for the liquefaction of coal. Research programs in these areas that could lead to breakthroughs in technology should be funded. The evolutionary improvements will result as a natural consequence of running pilot plants and in conducting research on novel liquefaction processes.

Indirect liquefaction

Indirect liquefaction consists of first gasifying coal and then catalytically converting the synthesis gas (SG) (principally CO and H_2) to liquid hydrocarbons and other organic compounds. Various gasification processes can be used to produce the SG required for the liquefaction process. Many of these processes—Lurgi, Westinghouse (or KRW), Texaco, and Shell, among others—have been or are being demonstrated at sufficient scale to ensure the availability of the gasification component of indirect coal liquefaction. Except for laboratory research on innovative gasification concepts, no additional larger scale R&D on coal gasification for coal liquefaction feedstock production is indicated. In the event substantial improvements in coal gasification is suggested by the laboratory research on new processes, scale-up should be addressed.

For the liquefaction component of the indirect liquefaction process, various catalytic processes can be employed, depending on the desired products. The Fischer-Tropsch process has been demonstrated in South Africa to be an effective process for converting SG to a useful slate of products including propanes and butanes, light naphtha, heavy naphtha, diesel, fuel oil, methane, and alcohol mixtures. If gasoline is the desired end product, the Mobil MTG (methanol to gasoline) process may be used. In this process, SG is catalytically converted to methanol and then to gasoline.

Much of this process is currently being demonstrated on a commercial scale in New Zealand, where natural gas is being converted to gasoline. The New Zealand plant has been in operation for over two years and is a technical success. The economic success of this plant (or any other synthetic fuel plant) depends on the price of crude oil. At the current low oil price, the plant is not economical. After the loans are repaid in 1995, the plant is anticipated to become economical. The current policy in New Zealand is to sell the gasoline at current import prices. The strategic importance of the New Zealand plant is that it supplies about 14% (627,000 tons/year of gasoline) of the liquid fuels produced in New Zealand (New Zealand has achieved about 50% self-sufficiency in liquid fuels).

In the United States, a demonstration plant for indirect coal liquefaction should be built, and it should be based on processes that have been successfully demonstrated elsewhere (either the Mobil MTG process or the Fischer-Tropsch process). A U.S. experience base is needed to ensure that indirect liquefaction of coal can be implemented when and if it is needed. Laboratory research on novel concepts for coal gasification and the subsequent liquefaction of the gaseous products should be conducted, and the most

promising of these new processes should be incorporated into the demonstration plant program.

2.1.5.4 Flue-gas desulfurization *(by R. P. Krishnan)*

Coal-burning power plants produce a little over 60% of the man-made SO_2 emissions in the United States. To comply with the environmental regulations, utilities and industries have to install flue-gas desulfurization (FGD) systems downstream of the boilers to reduce SO_2 emissions. With the passing of the Clean Air Act Amendments and the New Source Performance Standards (NSPS), a number of FGD systems have been installed in the past decade. Installed capacity of FGD plants rose from 4,000 MW ten years ago to 50,000 MW today. An additional 15,000 MW are under construction and 9,000 MW in the contract award category (McIlvaine 1986). By 1992, nearly one third of the industrial and utility coal-fired boilers in the United States will be controlled by FGD systems, given the current utility plans.

There are 135 utility FGD systems currently operating in the United States. Sixty-nine units representing a capacity of 27,845 MW are located in the eastern part of the country, and 66 (30,054 MW) are located in the West. Projected growth in FGD installed capacity in the next 10 years is 63 units or 32,815 MW (Melia et al. 1987). The greatest growth is expected in the western United States because the majority of the new generating capacity projected lies in the west. If new "acid rain" controls are enacted, the role of FGD as a sulfur abatement strategy could increase dramatically.

Classification of FGD systems

FGD systems can be conveniently classified under three main categories: (1) wet scrubbing, (2) spray dry scrubbing, and (3) dry scrubbing. Over 200 individual processes have been suggested for FGD (EPRI 1984). A large number of these processes have been abandoned at various stages because of technical/economic reasons. A recent study evaluated 24 FGD processes for operability, technical merit, and commercial availability (Keeth et al. 1987). The 24 processes were grouped under three categories.

1. High-sulfur coal. Throwaway; where the FGD system is applied to a high-sulfur (4% S) coal-fired boiler, and the waste product is gypsum or a fixated sludge. Processes in this category include Conventional Limestone, Chiyoda Thoroughbred 121, Dowa, Limestone with Forced Oxidation, Saarberg Holter/Lime, Saarberg Holter/Limestone, Limestone Dual Alkali, Lime Dual Alkali, Wet Lime, Limestone/Wallboard Gypsum By-Product, Limestone Enhanced with Organic Acid (with and without forced oxidation), High Sulfur Lime Spray Dryer and Bischoff.
2. High-sulfur coal. Regenerable; in which the FGD system is applied to a high-sulfur coal-fired boiler and produces a by-product while regenerating the absorbing reagent. Processes in this category include Wellman-Lord, MgO, SULF-X, Flakt-Boliden, Aqueous Carbonate, Conosox, Pfizer, Mitsui-Desox, SOXAL, and NOXSO.
3. Low-sulfur coal. Throwaway; where the FGD system is applied to a low-sulfur (<4%) coal-fired boiler, and the waste product is a sludge or dry solid. Processes in this category include Conventional Limestone, Lime Spray Dryer, Nahcolite/Trona Injection, and Furnace Sorbent Injection.

Conventional limestone and lime-based, wet throwaway systems are the most popular and have the broadest application because these systems are relatively simple and use less equipment (absorber and a reaction tank), compared with the other systems, and lend themselves to modular construction (which allows stepwise expansion). Furthermore, these systems use a low-cost sorbent, have a wide range of commercial development, and meet the SO_2 emission criteria for all coals. They can be fitted to new and existing plants. Disadvantages of these systems are the scaling, plugging, corrosion, erosion, excessive reagent requirements due to the low solubility of calcium compounds and treatment of waste sludge before disposal.

Wet scrubbing systems. In wet scrubbing, the flue gas is scrubbed with an alkaline solution containing lime or limestone. The gas may or may not contain flyash, depending on the absorber design. Venturis and Turbulent Contact Absorbers (TCA) have been used for combined SO_2 and particulate control while spray towers, perforated trays, and other low-pressure drop contactors are often used only for SO_2 removal after the gas is first cleaned to remove the particulates in an electrostatic precipitator (ESP) or baghouse. Relative to gas volume, a large amount of slurry is sprayed or dispensed in the contactor, saturating the flue gas and removing the SO_2. Typical recirculation rates are 40 to 120 gal per thousand actual cubic feet of gas. The scrubbed gas is passed through mist eliminators and is often reheated to restore buoyancy before being discharged.

The SO_2-rich liquor is neutralized by adding alkaline reagents (lime/limestone), and the calcium sulfite liquor is allowed to precipitate in a holding tank. The sludge (calcium sulfite-flyash) is also sometimes oxidized (forced oxidation) by injecting air in a separate vessel to form calcium sulfate (gypsum), which is easier to dispose than sulfite liquor. Some processes also produce a "salable" gypsum. Other wet FGD systems use alkaline flyash, sodium carbonate, and a mixture of sodium hydroxide/sodium carbonate and lime (dual alkali) as the scrubbing reagent. The dual alkali systems are gaining popularity because they combine the advantage of using more reactive but expensive reagent (sodium compounds) at the same time, regenerating the scrubbing reagent with lime for reuse in the scrubber. Sodium carbonate systems are similar to dual alkali systems except that there is no regeneration of the scrubbing reagent.

Alkali flyash for SO_2 removal is limited to plants that use coal that produce a flyash with sufficient alkalinity to neutralize the absorbed SO_2. The calcium oxide in the ash is responsible for SO_2 removal—although magnesium, sodium, and potassium species can also contribute to SO_2 removal. Currently, FGD plants operating on alkaline flyash are restricted to plants fired on lignite and western coals.

Regenerative FGD processes differ from the "throwaway" processes described above in that the product of reaction between the reagent and SO_2 is decomposed to yield the scrubbing agent, which is then reconstituted and returned to the FGD process. The process results in a stream of SO_2 that can be converted to useful by-products. The regenerative FGD systems that have reached commercial status are the Wellman-Lord and the Magnesium-Oxide (MgO) processes. Together, they constitute about 6 to 7% of the total FGD systems in the United States (Murawczyk et al. 1984). Regenerative systems are opted only where there is a shortage of land for FGD sludge disposal. Throwaway systems are still the first choice among the utilities because they are less complicated and do not involve chemical operations as in the regenerable systems.

Spray dry scrubbing. In spray dry scrubbing, an alkaline solution or slurry is atomized in the flue gas and evaporates to dryness while reacting with the SO_2 and HCl. The resulting reaction products are collected, usually along with the flyash, in a particulate

control system (ESP or baghouse) and disposed of as a dry product. This method has several advantages over wet scrubbers because it eliminates the complexity and operating problems associated with liquid wastes and produces a "dry" waste product. Conversely, high SO_2-removal efficiencies (95% for wet FGD systems) are difficult to attain, and a highly reactive absorbent (non-limestone) must be used. Typically, spray drying systems use lime, and in some cases, sodium compounds. Several spray dryer systems are offered commercially. All involve the following steps: (1) reagent preparation, (2) atomization, (3) droplet-gas contact, (4) SO_2 absorption–water evaporation, and (5) particulate removal (Burnett and Anderson 1981).

Spray drying systems currently operate on utility and industrial boilers. Key features, vendors, and description of the spray drying system operating are described in EPRI (1984). Utility application is limited to low-sulfur coals (less than 1.5%), and sulfur removal guarantees ranges from 60 to 90%. Units range in size from 100 to 500 MW. Industrial boiler applications firing slightly higher sulfur coals (2 to 3.5%) for units generating up to 120,000 actual cubic feet per minute (acfm) of raw flue gas are operating. Worldwide, more than 9000 MW have been committed to spray drying; 4300 MW in the United States. This figure is expected to rise substantially with the projected growth in plants committed to low-sulfur western coals.

A prototype spray-drying FGD system in a high-sulfur coal application is in the demonstration stage at the Northern States Power Company Riverside Station. If the tests are successful, then the future for spray-drying FGD looks quite attractive.

Spray-dryer FGD systems have several potential advantages over wet-scrubbing FGD systems but also several technical and economic limitations that restrict their use in certain applications. First, spray-drying FGD does not have the large volumes of liquid scrubbing medium recirculating through the absorber with its high-energy requirement for pumping and the corrosion/erosion problems that have plagued wet systems. Mist eliminators and flue gas reheaters are not always needed as in wet systems, because the flue gas does not reach the saturation temperature. High pressure drops associated with wet systems are eliminated. The system produces a dry waste, which can be combined with the flyash collection. On the other hand, there are certain limitations associated with this system. Absorbents that are more reactive and expensive than limestone (e.g., sodium compounds, lime) are required and must be used at higher stoichiometric ratios than can wet scrubbing. There is also a limit in the quantity of water and absorbent that can be added to the flue gas, which limits its use to low-sulfur coals.

Dry-scrubbing systems. Dry-scrubbing processes carry spray-drying philosophy one step further by eliminating water usage entirely. In a dry-scrubbing process, a dry alkaline powder is injected directly into the flue gas stream. The alkaline particles react with SO_2 while suspended in the gas stream. Dry waste product from this reaction is subsequently collected in a particulate collection device (e.g., baghouse, precipitator) and the clean flue gas is vented to the atmosphere. Additional reaction between alkaline particles captured in the particulate control equipment and SO_2 occurs as the flue gas passes through the particulate collection system.

Dry scrubbing offers clear advantages over wet scrubbing and spray-drying FGD: (1) the total absence of water minimizes corrosion, erosion, plugging, scaling, and freezing problems; (2) dry scrubbing controls both particulates and SO_2 in a single piece of equipment; (3) the dry product is more convenient to handle; (4) no reheat of flue gas is required as in wet scrubbing (thereby reducing energy costs). The shortcomings of the dry

systems are low removal efficiency, low sorbent usage, increased solid waste production, and augmentation of particle control devices in retrofit applications.

Five basic dry sorbent injection processes are being developed of the bench, pilot, prototype and demonstration plant scales (Rhudy et al. 1987). Two are associated with the furnace—furnace sorbent injection (FSI) and convective pass injection—and three are associated with injection in the ductwork downstream of the air preheater—in-duct dry injection, in-duct spray drying, and Hybrid Pollution Abatement System (HPAS). Sodium-based compounds (e.g., nacholite, trona, sodium sesquicarbonate) and lime are used for SO_2 absorption, which make the dry processes more expensive compared with limestone sorbent-based systems. Blinding of the downstream particulate collection systems due to increased solids loading is also a major concern in the dry systems.

FSI is receiving more and more attention and is one of the alternatives for conventional FGD proposed under the clean coal program. The Limestone Injection Multistage Burner (LIMB) is an emerging technology that combines SO_2 and NO_x removal. In FSI systems, lime, limestone, or dolomitic material is injected in the furnace to directly react with the SO_2. The dry solids are removed from the flue gas by a fabric filter. Boiler modifications including installation of sorbent feed nozzles and additional sootblowing devices are required in FSI. NO_x control is achieved by modifications in the burner assembly and/or combustion operating conditions. For low-sulfur coals, low removal efficiencies, and smaller plants, FSI combined with low-NO_x combustion systems appears to be technically and economically more attractive than wet and spray FGD. However, these systems are extremely sensitive to reagent costs, have demonstrated only limited sulfur removal efficiencies (≈50%) and increase the particulate matter (PM) emissions from the plant. The resistivity of the flyash is also much higher than that of conventional FGD, which necessitates modifications and upgrading of existing ESPs and fabric filters in retrofit systems. Also, the chemistry is not well understood, and the process is very sensitive to furnace temperature and other process parameters. In the United States, two utility-scale projects are in progress to demonstrate FSI on eastern bituminous coal-fired boilers. In addition, two Canadian utilities are conducting full-scale FSI field trials on lignite and medium-sulfur bituminous coals (Rhudy et al. 1987). EPA, EPRI, DOE, and private industry are funding domestic and international boiler suppliers to conduct research on process improvements, burner design, and sorbent usage. While there are still many unresolved issues, significant breakthroughs—especially in burner designs and injection techniques—have resulted from these R&D projects. For example, the distributed mixing burner, the split-flame burner, the control combustion venturi (CCV) burner, and the Pollution Minimum burner have resulted from ongoing research.

Future outlook and R&D needs in FGD

While FGD is the most effective method available today to reduce SO_2 emissions, it is also the most expensive. Several alternatives to FGD are being developed [integrated coal gasification—combined cycle, fluidized bed combustion, integrated physical coal cleaning and FGD/FSI systems, and liquid fuels (methanol from coal)], but these technologies are not expected to replace FGD, at least until the turn of the century. Cost and reliability are the two major concerns of FGD systems, and substantial efforts are under way to address these concerns. Advanced limestone/gypsum FGD processes that produce saleable gypsum [Chiyoda Thoroughbred (Melia et al. 1987)] have been successfully tested and can become commercially available.

Overall, the performance of FGD systems has shown marked improvement since the mid 1970s, and system availability has shown a slow but steady improvement over the years. Commercially available FGD processes can remove 90% of SO_2, and over 90% of NO_x can be removed by a simultaneous or supplemental process. The lime and dual-alkali FGD systems have shown superior performance on high-sulfur coals and, at the same time, use less water; consume less energy; have better turndown and load efficiency; and are less prone to plugging, corrosion, and erosion. The disadvantage is that the reagent costs are higher compared with limestone. Nevertheless, these systems will be considered in increasing numbers by utilities and industries in the future.

From the point of sorbent usage, the current figure for wet-limestone systems are 80 to 85% usage at 90% sulfur removal at a Ca/S ratio of 1.2. The figures for lime are greater than 90% usage for 95% removal at a Ca/S ratio of 1.05. For dry FGD, the figures are 50% SO_2 reduction with limestone at a Ca/S ratio of 2.5. The near-time goals for dry FGD are to increase SO_2 capture to 70% at a Ca/S ratio of 2 with calcitic hydrate or other reactive materials for sorbent.

Research on finer grind limestone and the use of chemical additives to enhance the limestone usage at stoichiometric ratios approaching that of lime is a high-priority area (R. P. Krishnan, Engineering Technology Division at Y-12, personal communication with M. Owen, Radian Corp., Austin, Texas, May 1988). Because limestone is less expensive and is widely available, it should be the first choice for any future FGD system.

Reliability issues in FGD can be addressed by a better understanding of the process chemistry. While the chemistry appears to be deceptively simple, most problems that have plagued FGD in the past were due to a lack of understanding of the chemistry of the side reactions that occur in the various sections of the plants. The basic chemistry of SO_2 removal in spray-dryer FGD (i.e., reaction mechanisms and rate controlling steps) are not completely defined, and additional work is needed in this area. A somewhat similar situation prevails in dry-sorbent injection systems, where the chemistry is controlled by the furnace/duct temperatures at which the sorbent is injected. Temperature bands have been identified where the sorbent usage is maximum, but further work is needed to optimize the process conditions.

Construction materials is an area that has received great attention in the FGD industry. The early failures of FGD systems were mostly due to premature failure of equipment and components in FGD systems (e.g., absorbers, tanks, duct work, and stacks). These problems have been resolved through extensive R&D. Depending on the service condition, metals ranging from carbon steel to nickel-base alloys, organic linings, plastics, and ceramics are currently being used in FGD plants. With regard to stacks, acid-resistant bricks are used; and more recently, for wet stacks, lining of the stacks with titanium-Inconel™ alloys have been considered (R. P. Krishnan, Engineering Technology Division at Y-12, personal communication with B. Laskey, PEI Associates, Cincinnati, May 1988). Research on performance of materials under various environments (temperature, pH, chlorides, fluorides, SO_2/NO_x concentration, moisture content) is needed.

The simultaneous removal of SO_2/NO_x in FGD systems and the process of combining SO_2 and particulate control using dry reagents is gaining interest. These systems have the potential of greatly simplifying FGD hardware requirements and significantly reducing the capital requirements for new and retrofit installations. Several processes (e.g., LIMB, Selective Catalytic and Noncatalytic Reduction, Ammonia Injection coupled with Electron Beam) are in the various stages of development. Major improvements are needed with regard to removal efficiencies, process optimization and control, waste fixation, catalyst life

extension, cost reduction, and elimination of ammonia leakage. Given adequate funding and emphasis in future R&D programs, these processes can be made commercially viable in the 1990s.

2.1.6 Advanced Conversion *(by D. B. Reister)*

This section discusses three methods for advanced conversion of fuel into electricity: (1) aeroderived gas turbines, (2) Kalina cycle, and (3) magnetohydrodynamics (MHD).

2.1.6.1 Aeroderived gas turbines

This section is based on a recent paper by Williams and Larson (1988), who conclude that a revolution is under way in electricity-generating technology that could soon radically transform the power industry (in both developed and developing countries). The revolution involves not an exotic new technology but rather the upgrading of the gas turbine. In the electric utility industry, the gas turbine has been restricted to peaking plants because it has a lower efficiency than a condensing steam turbine and because it requires high-quality (and expensive) fuel. In cogeneration (the joint production of electricity and process steam), the gas turbine has been used in applications with steady steam loads.

Recent technological innovations allow gas turbines to compete in cogeneration markets characterized by variable heat loads and to compete with baseload electric utility technologies. The central innovation is to inject large quantities of steam into the combustor and increase the gas flow and power output for the gas turbine.

There are two types of gas turbines: (1) stationary and (2) aircraft. The stationary units have been used for peaking units and for combined-cycle plants. The electrical output of stationary units ranges from 70 to 135 MW. The stationary units are well suited to combined-cycle operations because their low compression ratios (8 to 16) yield hot exhaust gases (600°C). (In a combined-cycle plant, fuel is burned and expanded through a gas turbine to produce electricity. The exhaust gases produce steam in a heat-recovery steam generator, and the steam produces electricity in a steam turbine.)

Aircraft turbines used to produce electricity have smaller capacities (30 to 35 MW) and higher compression ratios (18 to 30). The aircraft turbines are not well suited to combined-cycle operations, because their high compression ratios yield cool exhaust gases.

In the period 1965 to 1975, stationary gas turbine capacity in the U.S. electric utility industry increased from 1.1 to 37.1 GW. After the oil price shock of 1973, utility interest in stationary gas turbines dropped sharply, and the installed capacity in 1987 is only 43.4 GW. With the collapse of the market for stationary gas turbines, the level of R&D declined.

The oil price shock spurred a massive R&D program to improve the efficiency of aircraft turbines (from 1970 to 1980, the fuel cost share of operating expenses for air passenger service increased from 11 to 32%). Furthermore, the U.S. Department of Defense supported R&D on jet engines for military applications at a high level (for the period 1976 to 1986, the average was $450 million/year).

While the R&D on aircraft turbines focuses on high-technology methods (e.g., turbine blade materials) of improving aircraft performance, very little R&D has been performed on low-technology methods (e.g., reheat, intercooling, regeneration, evaporative regeneration, and steam injection) that could improve the performance of aircraft turbines in stationary applications. Obviously, turbine modifications that involve the use of large

quantities of steam or the use of heavy or bulky heat exchangers will not improve the performance of aircraft.

The improvements in aircraft turbines have created an opportunity for cost-effective R&D to make major improvements in the performance of aircraft turbines for stationary applications. Williams and Larson (1988) outlined a research plan that would require four or five years and $100 million (including $40 million for the first unit).

The revolutionary development that transforms the gas turbine from a peaking unit to a baseload unit is the injection of steam into the combustor. Compared with a simple-cycle gas turbine, the steam-injected gas turbine (STIG) produces more power and has a higher electrical efficiency. The only extra work required with steam injection is compressing the steam to boiler pressure. The small increase in work and the high heat capacity of steam results in a large increase in efficiency. Aircraft turbines are chosen for steam injection because they are designed to accommodate large gas flows.

The Public Utility Regulatory Policies Act of 1978 (PURPA) encourages cogeneration. The STIG concept was introduced to cope with the most troublesome problem for a simple-cycle gas turbine (poor part-load performance). With a STIG unit, steam not needed for process applications can be used to produce more electric power (to sell to an electric utility).

The General Electric (GE) LM-5000 is an aircraft turbine with an electrical output of 33.1 MW and an efficiency of 33% when operated as a simple-cycle gas turbine burning natural gas. With full steam injection, the output increases by 60% to 52.5 MW and the efficiency to 40%.

The use of STIG for cogeneration has stimulated interest in its use for baseload electrical utility applications. Compared with a combined-cycle plant, a STIG would have lower capital cost, lower water requirements, and a higher availability. However, the efficiency of a STIG is less than those of advanced combined-cycle plants. With a doubling of the natural gas price, the advanced combined-cycle plant is more cost-effective than a STIG.

A more interesting candidate for baseload utility applications is the intercooled STIG (ISTIG). Intercooling between the two compressor stages allows the turbine inlet temperature to be raised from about 1211 to 1370°C. Using a GE LM-5000, GE estimates that an ISTIG could produce about 110 MW with a 47% efficiency and an installed capital cost of about $400/kW.

The estimated efficiency for ISTIG is higher than that of advanced combined-cycle plants, while the capital costs are lower. If both the ISTIG and combined-cycle plants burn natural gas, the ISTIG will produce less expensive electricity. Even if the price of natural gas doubles, ISTIG is estimated to produce electricity at a lower cost than can a large coal-fired steam-electric plant with flue-gas desulfurization.

While all technological comparisons are uncertain (both technology and fuel costs will probably change), the STIG and ISTIG have several advantages. STIG and ISTIG units are less complex than combined-cycle units (while both systems have a gas turbine and a heat-recovery steam generator, a STIG does not have a steam turbine, condenser, or cooling tower). Pollution controls are less costly for a STIG than those for a combined-cycle unit. The small size of the STIG units provides more flexibility in capacity expansion. STIGs are manufactured in factories and have the benefits of mass production. STIGS will benefit from expected continuing improvements in jet engine technology. High efficiency and the use of natural gas will reduce emissions of carbon dioxide. The many advantages of STIG

and ISTIG provide a powerful incentives for expanded market penetration in both the cogeneration and electric utility markets.

Natural gas has a smaller resource base than coal. Coal could be gasified to provide fuel for gas turbines. Williams and Larson (1988) argue that a Lurgi gasifier would be less costly than a Texaco gasifier. Gasified biomass could be an important source of fuel in developing countries.

Assessment of ISTIG potential *(by T. K. Stovall)*

The intercooled steam-injected gas turbine (ISTIG) cost and efficiency projections cited by Larson and Williams (1988) are supported by a wide range of authors in industry and academia. The ISTIG efficiency estimates are also supported by a theoretical review of the cycle thermodynamics.

The major obstacle for the wide-scale implementation of ISTIG appears to be the lack of a development sponsor. This obstacle, in turn, is closely tied to current market competition with combined-cycle systems. Combined cycles and ISTIG have comparable efficiencies, and combined-cycle systems are currently available. The ISTIG is projected to cost less than combined-cycle systems at small sizes. Therefore, any push for ISTIG development must logically be aimed at dispersed markets, such as the biomass application cited by Larson and WIlliams. Outside dispersed markets, the combined cycle will likely be the chosen system.

The issues of efficiency, cost, maintenance, and environment are addressed separately in this summary.

Efficiency

Currently, the projected energy conversion efficiencies of ISTIG and combined cycles (CCs) are comparable. Machines for both cycles are likely to improve before ISTIG becomes available (General Electric is working on the successor to the machine on which the ISTIG projections have been based). Both ISTIG and CC are clearly superior to a straight steam-injected gas turbine (STIG) cycle.

The output of the ISTIG will be sharply curtailed for higher ambient temperatures (output is rated for 59°F) because of increased compressor work. The additional compressor work is caused by the decreased density of air at higher temperatures. For example, a STIG cycle that produces 52 MW at 20°F will produce only 42 MW at 90°F. This lower output does not appear to be a problem with gas turbine peaking applications but may prove to be important for baseload applications. The ambient temperature will also affect the output of the gas turbine portion of the combined cycle.

Cost

Most of the literature surveyed places ISTIG and CC costs at about the same level for large systems. Because the steam turbine portion of the CC is more sensitive to scale than is the gas turbine, the ISTIG is usually projected to have lower costs for small-size applications. (However, it is important to recognize that the cost estimates for ISTIG are projections for a system that requires further development and is further discussed below.) For any installations tied to coal gasification equipment, the economies of scale of the gasification technology will probably lead to larger sizes where CC would be the logical,

available choice. However, for small biomass-fueled systems where the plant size is chosen to match the economically available fuel supply, ISTIG may offer a price advantage.

Soroka and Kamali (1987) of Bechtel produced the original capital cost estimate of $400/kW that is quoted throughout the rest of the articles surveyed. This 1987 estimate is given as a range from $400 to $420 and is based on a 188-MW plant. Horner (1988) of GE says that this estimate is still appropriate. Recent STIG installations have been more costly (the Simpson Paper installation was about $540/kW) but have included extra items such as redundant auxiliary equipment. Also, the ISTIG should cost less than the STIG because essentially the same machine will produce more net power. According to Horner, the additional cost attributed to the intercooler will be less than that of the heat recovery steam generator, which itself is only a small percentage of the total plant cost.

Most of the reviewed cost estimates purport to follow the guidance given in *TAG—Technical Assessment Guide* (EPRI 1986). However, as mentioned above, ambient temperatures have a great effect on gas turbine net output. *TAG* calls for either basing the total rating on the maximum ambient temperature or presenting costs on the basis of derated capacity under maximum temperature conditions. Neither of these approaches has been used for the ISTIG comparisons. Also, *TAG* gives specific guidance on contingency factors to be applied to new technologies. Considering that full-size STIGs are in operation but that no ISTIG has even been built on a bench scale, the appropriate contingency factor should be about 30%. No contingency costs were included in Soroka's capital cost estimate.

The ISTIG busbar electricity cost is questionable because of two factors: (1) equipment life and (2) capacity. In most estimates, the capital cost tends to be spread over a 30-year life. However, gas turbines are usually designed for a 100,000-h lifetime. In the past, for peaking applications, that design lifetime may have covered a 30-year or longer period. In baseload applications, however, the turbine life will likely be closer to the design point. Horner (1988) says that many turbines exceed their design life, but usually by that time, the technology has advanced and replacement is more desirable. Therefore, the capital cost element has probably been underestimated.

Capacity factors also have a direct effect on the capital cost portion of the busbar electricity costs. Capacity factors used in the projected cost estimates varied widely, from 0.84 to 0.75 to 0.65. Capacity factors have a direct impact on the allocated capital cost, with lower capacity factors leading to increased electricity costs. This broad range in capacity factors is caused by variations in assumed equipment availability (determined by maintenance requirements), system application (such as peaking or baseload), and fuel availability (important for cogeneration or biomass applications). Usually, a consistent capacity factor was used for comparison between technologies within any given reference. However, the varying capacity factor assumptions make comparisons between values taken from different references difficult.

Maintenance requirements

Remote maintenance through the use of an engine lease-pool arrangement seems reasonable for the ISTIG system. Scheduled preventative maintenance requirements described by Horner (1988) of GE are also reasonable and agree with those listed by Norris et al. (1980).

If this issue is of major concern, two other sources could be investigated. The first would be to contact operating personnel at the Simpson Paper Company and the Frito-Lay plants regarding their experience. It would also be interesting to see the North

American Electric Reliability Council data and the Dow maintenance experience referenced by Larson and Williams (1988) from one of their workshops.

Environment

ISTIG, STIG, and CC all offer environmental benefits compared with current coal-fired steam plants. The potential ISTIG cost advantage at small sizes may enhance the economics of using renewable biomass fuels. Steam injection decreases NO_x and CO emissions for ISTIG and STIG. Both ISTIG and CC have higher overall efficiencies that lead to less fuel use and, therefore, decreased combustion products.

STIG uses about one-half the water used at a traditional steam power plant and slightly more than that used by a CC (2.5, 3.8, and 1.8 lb/kWh respectively). Because of the intercooler heat rejection usage, water requirements for ISTIG are greater than those for STIG. With the LM8000 ISTIG cycle balance provided, the injection water requirements are about 2 lb/kWh. The intercooler requires 3300 gpm with a 12°F temperature rise. If this heat were rejected via evaporation, it would correspond to 1.2 lb/kWh, for a total ISTIG requirement of about 3.2 lb/kWh.

Water quality requirements for STIG cycles are less rigorous than for CC cycles because temperatures are lower and no condenser is required. Water treatment costs are expected to be a very small part of total costs. Therefore, the total cost is relatively insensitive to wide variations in the water treatment costs.

If water consumption becomes a prime concern, a water-injection cycle proposed by El-Masri (1988) should be investigated. It is projected to use 28% less water than an STIG cycle. It should be noted that recycling water from an STIG or ISTIG would be very difficult because of the presence of CO_2 and SO_2 in the condensate.

Bibliography for Section 2.1.6.1

W. W. Bathie, *Fundamentals of Gas Turbines,* Wiley, New York, 1984.

D. O. Blake et al., *Water Impurities Impact in a Steam Injected Gas Turbine,* Final Report, NUS-4586 (DE85000565), NUS Corporation, Gaithersburg, Md., August 1984.

S. Consonni, Princeton University, Trip report from visits at General Electric Company, Pacific Gas and Electric Company, and Southern California Edison Company, Feb. 28, 1989.

J. C. Corman, General Electric Company, *System Analysis of Simplified IGCC Plants,* DOE/ET/14928-2233 (DE87002508), September 1986.

M. A. El-Masri, "A Modified, High-Efficiency Recuperated Gas Turbine Cycle," *J. Eng. Gas Turbines Power,* 110(2), 233-42 (1988).

Electric Power Research Institute *TAG—Technical Assessment Guide, Volume 1: Electricity Supply—1986,* EPRI P-4463-SR, December 1986.

J. D. Frasca et al., *A Study to Determine the Cost-Effectiveness of Using Steam-Injected Gas Turbines With Coal Gasification Equipment,* EPRI AP-4507, Final Report, April 1986.

M. W. Horner, General Electric, Comments on *Preparation of the 1988 Electricity Report (ER7),* for the California Energy Commission, Nov. 18, 1988.

D. Keller, D. Bynum, and L. Kosla, "Cheng Cycle Brings Flexibility to Steam Plant," *Power Eng.* 90(11), 45-48 (1986).

E. D. Larson et al., *Biomass Gasification for Gas Turbine Power Generation,* prepared for Vattenfall Electricity, December 1988.

E. D. Larson and R. H. Williams, Princeton University, "Biomass-Fired Steam-Injected Gas Turbine Cogeneration," *Proc. 1988 ASME Cogen-Turbo Symp.*, Montreux, Switzerland, Aug. 30-Sept. 1, 1988.

"New NO_x and CO Limits Spark Utility Industry Interest in 'I-STIG'," *Gas Turbine World News*, Dec. 30, 1988, pp. 1-8.

P. Norris et al., Boyce Engineering International, *The External Combustion Steam Injected Gas Turbine for Cogeneration*, DOE Project DE-AC03-77ET11448, January 1980.

Pacific Gas and Electric Company, General Electric Company, *Scoping Study: LM5000 Steam-Injected Gas Turbine*, PG&E, July 1984.

G. Sotoka and K. Kamali, Bechtel, "Modular, Remotely-Operated, Fully Steam-Injected Plant for Utility Application," presented at the ASME COGEN-TURBO International Symposium on Turbomachinery, Combined-Cycle Technologies and Cogeneration, Montreux, Switzerland, September 1987.

M. Spasyk and K. Bochm, University of Utah, "First and Second Law Comparisons of High Efficiency Brayton Cycles," presented at the Winter Annual Meeting of the American Society of Mechanical Engineers, Dec. 1987.

R. H. Williams, Princeton University, *Biomass Gasifier/Gas Turbine Power and the Greenhouse Warming*, IEA/OECD Expert Seminar on Energy Technologies for Reducing Emissions of Greenhouse Gases, April 1989.

R. H. Williams, Princeton University, Testimony before the Subcommittee on Foreign Operations of the Appropriations Committee of the U.S. House of Representatives, Feb. 21, 1989.

R. H. Williams, Princeton University, "Using I-STIG to Help Cope with Acid Rain, CO_2, and Urban Ozone Pollution," draft, Feb. 24, 1989.

2.1.6.2 Kalina cycle

This section is based on a recent EPRI report by Mechanical Technology, Inc. (MTI 1986). The MTI report provides a preliminary assessment of the Kalina cycle as a bottoming system for a small (6-MW) combined-cycle power plant. The report compares the Kalina bottoming cycle with a gas turbine without a bottoming cycle and to three alternative steam-bottoming-cycle systems. Using the revenue requirements method of cost analysis, the Kalina cycle is the least-cost combined-cycle power plant (at low fuel costs and low load factors, the simple gas turbine is the least-cost option).

The Kalina cycle is a modified Rankine cycle in which a two-component mixture of ammonia and water is used as the working fluid. The novel feature is that the relative concentrations of the two-component mixture are varied throughout the cycle to improve the efficiency of heat transfer and facilitate the condensing process.

Based on a single-pressure boiler using a 70/30 mixture of ammonia and water, Kalina (1984) devised and calculated a bottoming cycle that produces a net generator output of 2378 kW(e), including 60 kW(e) for pump work. Kalina's calculation was based on a commercially available multistage axial turbine.

The two-component mixture improves the efficiency of heat transfer. During the first 22% of the heating cycle, the water-ammonia mixture absorbs heat without a phase change. At 330°F and 1576 psia, vaporization begins, but unlike a single-component fluid, the boiling process does not occur at a constant temperature. Instead, the partial pressure differences between the ammonia and water result in a temperature rise as heat is added. This characteristic represents one of the major features of the system; that is, the

irreversibility losses that occur for a single-component fluid that vaporizes at a constant temperature are significantly reduced. At 450°F, 67% of the heat has been transferred and vaporization is complete. The fluid is then superheated to its final state of 980°F and 1570 psia.

The second major feature of the Kalina cycle is its ability to overexpand the working fluid beyond the mixture's condensing pressure and then condense it at ambient temperatures. Ordinarily, if the 70/30 ammonia/water mixture were expanded through a turbine to a back pressure of 20.7 psia, it would require a heat sink temperature below 0°F to condense the vapor back to the liquid state. However, if a stream of water is combined with the turbine exhaust vapor in a spray-type absorber, the condensing temperature of the resulting mixture is raised. Decreasing the ammonia concentration in the working fluid from 70 to 40% at 20.7 psia results in raising the condensing temperature to 60°F.

The temperature difference selected for the Kalina cycle condensing process is smaller than the difference for conventional steam plants. The smaller temperature differences may result in additional heat transfer surface and cost. Because the Kalina cycle condensing process operates at a higher pressure than conventional steam plants, the condensing vessels have a smaller diameter and a lower cost than the conventional vessels. Smaller temperature differences increase the cost, while higher pressures reduce the cost. The net effect is unknown.

To increase the ammonia concentration from 40 to 70%, the condensate is distilled. The heat required to drive the distillation process is derived from the turbine exhaust vapor in a recuperative heat exchange process.

The thermodynamic efficiency for the simple gas turbine was 28%. The efficiency of the three conventional bottoming cycles ranged from 42 to 44%. The efficiency for the Kalina cycle was 46%. Expressed in 1985 dollars per kilowatt (electric), the capital costs were $428 for the gas turbine; $992, $876, and $1015 for the conventional bottoming cycles; and $973 for the Kalina cycle.

Using the revenue requirements method of cost analysis, the MTI report considered four sets of fuel prices, also in 1985 dollars ($1.75, $2.75, $4.00, and $5.50/million Btu) and three sets of load factors (4200, 6000, and 8400 h/year). For the lowest fuel price, the simple gas turbine was the least-cost option for the two smaller load factors. For the remaining ten cases, the Kalina cycle was the least-cost option. In 1987, the average gas prices were $2.94 for industrial customers and $2.32 for electric utility customers. Thus, the Kalina cycle appears to be an attractive option at current gas prices.

2.1.6.3 Magnetohydrodynamics

This section is based on a recent report by the International Energy Agency (IEA) Coal Research office (Morrison 1988). Interest in magnetohydrodynamics (MHD) began as early as 1831, when Faraday conducted his initial experiments. However, serious interest in commercial-scale power generation based on MHD dates from the 1950s, when high-temperature combustors were developed for rocket applications. The main reason for the interest in MHD was the potential for high efficiency (40 to 60%). However, major technical problems remain to be solved.

A MHD power system is a combined-cycle unit with an MHD topping cycle and a bottoming steam cycle. In the MHD cycle, fossil fuel is burned to produce an extremely hot gas or plasma (2500°C). A chemical seed (typically a potassium compound) is added to give the hot gas an electrical charge. The charged gas passes through a channel surrounded by

a strong magnetic field. Electricity is produced that can be tapped by electrodes embedded in the channel. At the end of the MHD cycle, heat exchangers and particulate-removal systems extract heat (for the steam bottoming cycle) and solid particles of seed (and coal ash if the fuel is coal).

As electrical conductivity (and power density) decreases rapidly with decreasing temperatures, the hot gases exit the MHD channel at 2000°C. Thus, the MHD channel removes a small fraction of the energy in the hot gases. Typical inlet temperatures are 1100°C for a gas turbine and 540°C for a steam turbine.

Overall plant efficiencies for large, mature MHD plants are projected to be in the range of 50 to 60%, although 40 to 45% is probably more realistic for early commercial plants using oxygen enrichment for combustion. Thus, the early plants are less efficient than advanced, combined-cycle plants and ISTIG.

DOE research on MHD is focused on the Component Development and Integration Facility (CDIF) in Butte, Montana, and the Coal-Fired Flow Facility (CFFF) in Tullahoma, Tennessee. The components of a complete system include combustor, generator, magnet, power conditioning, heat recovery/seed recovery, and gas cleaning. The CDIF is testing a 50-MW thermal input combustor developed by TRW. The CFFF has been performing R&D on power conditioning, heat recovery/seed recovery and on evaluating emissions of SO_x and NO_x from MHD plants. AVCO corporation has been performing R&D on the generator channel, while Argonne National Laboratory has been developing superconducting magnets.

The Soviet Union completed a 250-MW thermal gas-fired pilot plant (called U-25G) in 1972. The U-25G plant produces about 20 MW(e) from an MHD topping cycle and could produce another 40 to 50 MW(e) if a steam bottoming cycle had been installed. The Soviet Union is constructing the U-500, a 500- to 600-MW(e), commercial-scale combined cycle plant.

The feasibility of generating electricity by MHD has been demonstrated at a small scale, although considerable developmental work on individual components remains. Early commercial MHD plants might be able to produce electricity at a cost 10% less than other advanced technologies. The potential for a small reduction in cost will probably not justify the risk required to develop the technology.

MHD remains a long-term technology. Significant component development (particularly with regard to materials) is required. Much of the current R&D work is about an order of magnitude lower in scale than for a full-size commercial plant. Priority R&D topics are

1. long-duration, high-enthalpy extraction channel tests;
2. seed recovery and seed reprocessing;
3. collection of particulates from coal-fired plants;
4. high-temperature, direct-fired air heaters; and
5. extension of electrode life.

2.1.7 References for Section 2.1

Dickerman, J. C., et al. 1984. *The Evaluation and Status of Flue Gas Desulfurization Systems,* EPRI CS-3322, Electric Power Research Institute, Palo Alto, Calif.

Burnett, T. A., and Anderson, K. D. 1981. *Technical Review of Dry FGD Systems and Economic Evaluation of Spray Dryer FGD Systems,* EPA-600/7-81-014, Environmental Protection Agency.

DOE (U.S. Department of Energy) 1986. *Contracts for Field Projects and Supporting Research on Enhanced Oil Recovery,* DOE/BC-86/4.

EIA (Energy Information Administration) 1987. *International Energy Annual—1986,* DOE/EIA-0219(86), U.S. Department of Energy.

Fisher, W. L. 1987. "Can the U.S. Oil and Gas Resource Base Support Sustained Production?" *Science* **236**, 1631-36 (26 June 1987).

Friedmann, F. 1988. "Experimental and Simulation Study of High Temperature Foam Displacement in Porous Media," *Proc. Sixth SPE/DOE Symp., Enhanced Oil Recovery,* Tulsa, Okla., April 17-20, Society of Petroleum Engineers, Richardson, Tex.

Holstein, E. D. 1988. Presentation at the SPE/DOE Sixth Joint Symposium on Enhanced Oil Recovery, Tulsa, Okla., April 17-20, Society of Petroleum Engineers, Richardson, Tex.

Hudgins, D. A., and Chang, T. H. 1988. "Laboratory Study of Nitrogen Miscible Displacement of Light Crude Oil," *Proc. Sixth SPE/DOE Symp. Enhanced Oil Recovery,* Tulsa, Okla., April 17-20, Society of Petroleum Engineers, Richardson, Tex.

IOOC (Interstate Oil Compact Commission) 1986. *The Potential of Enhanced Oil Recovery by Carbon Dioxide Flooding in New Mexico,* Oklahoma City.

IOOC (Interstate Oil Compact Commission) 1987. *The Potential of Enhanced Oil Recovery in Oklahoma,* Oklahoma City.

Kalina, A. I. 1984. "Kalina Cycle Power System KCS1V5," ASME Meeting, Houston, Texas, December 1984, American Society of Mechanical Engineers, New York.

Keeth, R. J., et al. 1987. "Economic Evaluation of Twenty-Four FGD Systems," pp. 3-15 in Vol. 1, *Proc. Tenth Symp. Flue Gas Desulfurization, Atlanta, Ga., Nov. 17-26, 1986,* EPRI CS-5167, Electric Power Research Institute, Palo Alto, Calif.

Llave, F. M., Chung, F. T. H., and Burchfield, T. E. 1988. "The Use of Entrainers in Improving Mobility Control of Supercritical Carbon Dioxide," *Proc. Sixth SPE/DOE Symp. Enhanced Oil Recovery,* Tulsa, Okla., April 17-20, Society of Petroleum Engineers, Richardson, Tex.

Lumpkin, R. E. 1988. "Recent Progress in the Direct Liquefaction of Coal," *Science* **239**, 873-77.

Marland, G. 1982. "The Impact of Synthetic Fuels on Global Carbon Dioxide Emissions," pp. 406-10 in *Carbon Dioxide Review: 1982,* ed. W. C. Clark, Oxford University Press, New York.

Marqueen, T. J., Carbone, D. J., and Ligammari, J., 1986. "Coal Gasification Combined Cycle Systems—Technical Horizons," pp. 235-41 in Vol. 48, *1986 Proc. Am. Power Conf.*, Chicago, Illinois Institute of Technology, Chicago.

Masters, C. D., et al. 1987. "World Resources of Crude Oil, Natural Gas, Natural Bitumen, and Shale Oil," *World Petroleum Congress,* Houston.

McIlvaine, R. W. 1986. "The Present and Future Status of FGD in the United States," p. 2-1 in Vol. 1, *Proc. Ninth Symp. Flue Gas Desulfurization, Cincinnati, Ohio, June 4-7, 1985,* EPRI CS-4390, Electric Power Research Institute, Palo Alto, Calif.

McPhee, C. A., Tehrani, D. H., and Jolly, R. P. S. 1988. "Foam Flooding of Cores Under North Sea Reservoir Conditions," *Proc. Sixth SPE/DOE Symp. Enhanced Oil Recovery,* Tulsa, Okla., April 17-20, Society of Petroleum Engineers, Richardson, Tex.

Melia, M. T., et al. 1987. "Trends in Commercial Applications of FGD," p. 2-23 in Vol. 1, *Proc. Tenth Symp. on Flue Gas Desulfurization, Atlanta, Ga., Nov. 17-26, 1986,* EPRI CS-5167, Electric Power Research Institute, Palo Alto, Calif.

Morrison, G. F. 1988. *Coal-Fired MHD,* IEACR/06, IEA Coal Research, London.

MTI (Mechanical Technology Inc.) 1986. *Technological Assessments of Advanced Power Generation Systems II—Kalina Bottoming Cycle,* EPRI AP-4681, Electric Power Research Institute, Palo Alto, Calif.

Murawczyk, C., et al. 1984. "The Outlook for Regenerative Magnesium Oxide FGD," *Chem. Eng. Progress,* p. 63 (September).

NPC (National Petroleum Council) 1980. *Unconventional Gas Sources,* Washington, D.C.

NPC (National Petroleum Council) 1984. *Enhanced Oil Recovery,* Washington, D.C.

OTA (Office of Technological Assessment) 1985. *Oil and Gas Technologies for the Arctic and Deepwater,* OTA-O-270.

Penner, S. S., ed. 1987. "Coal Gasification: Direct Applications and Syntheses of Chemicals and Fuels," DOE/ER-0326 U.S. Department of Energy, Office of Energy Research, Office of Program Analysis, Coal Gasification Research Needs Working Group.

Rhudy, R., et al. 1987. "Status of Calcium-Based Dry Sorbent Injections SO_2 Control," p. 9-69 in Vol. 2, *Proc. Tenth Symp. Flue Gas Desulfurization, Atlanta, Ga., Nov. 17-26, 1986,* EPRI CS-5167, Electric Power Research Institute, Palo Alto, Calif.

Rossen, W. R. 1988. "Theories of Foam Mobilization Pressure Gradient," *Proc. SPE/DOE Sixth Symp. Enhanced Oil Recovery,* Tulsa, Okla., April 17-20, Society of Petroleum Engineers, Richardson, Tex.

Simbeck, D. R., Dickenson, R. L., and Oliver, E. D. 1983. *Coal Gasification Systems: A Guide to Status, Applications, and Economics,* EPRI AP-3109, Synthetic Fuels Associates, Inc., Mountain View, Calif., published by the Electric Power Research Institute, Palo Alto, Calif.

Stochl, R. J., and Nainiger, J. J. 1983. *IGCC Performance Comparison for Variations in Gasifier Type and Gas Turbine Firing Temperature,* NASA Technical Memorandum 83310, National Aeronautics and Space Administration, Lewis Research Center, Cleveland.

Torr, D. 1988. Untitled presentation at the SPE/DOE Sixth Joint Symposium on Enhanced Oil Recovery, Tulsa, Okla., April 17-20, Society of Petroleum Engineers, Richardson, Tex.

WEC (World Energy Conference) 1986. "Survey of Energy Resources," World Energy Conference, London.

Williams, R. H., and Larson, E. D. 1988. "Aeroderivative Turbines for Stationary Power," *Ann. Rev. Energy* 13, 429-89.

2.2 FISSION—A NEW AGENDA FOR THE CIVILIAN REACTOR PROGRAM *[by J. E. Jones (Leader), R. S. Booth, W. D. Burch, C. W. Forsberg, U. Gat, V. F. Homan, P. Kasten, A. P. Malinauskas, J. R. Merriman, F. R. Mynatt, H. E. Trammell, D. B. Trauger, R. E. Uhrig, A. Weinberg (IEA), T. Kerlin (UT), W. P. Barthold (Consultant), M. Mills (Consultant), and R. Rowan (Consultant)]*

2.2.1 Energy Policy: Planning vs Drifting

Overall energy demand in the United States has remained virtually unchanged since 1973. Over the same period, however, consumption of electricity has increased over 50% (DOE 1988, pp. 11, 87). This trend is expected to continue. While the Energy Information Administration projects no net change in non-electric energy demand through the year 2000, they project that 120 gigawatts (GW) more capacity will be required in the electric sector (DOE 1989a, pp. 45, 46, 50). Total U.S. electric generating capacity currently is approximately 680 GW (EEI 1986; and NAERC 1988). The primary source of energy growth has been, and is projected to continue to be, in the electric sector.

Practical choices for electric energy production in the United States are limited, and they all have uncertainties and risks. Coal and nuclear energy are, from a fundamental engineering economics point of view, the most economically attractive fuels for baseload power generation, while natural gas and oil are the most flexible and expedient. Bludgeoned by uncertainty in the political, financial, and regulatory arenas, utility decision makers now avoid commitment of major expenditures for capital facilities; instead, they make decisions for new capacity additions on an incremental basis. The public and elected officials appear to be content with the knowledge that oil and natural gas are relatively inexpensive today and take solace in the knowledge that the United States has abundant coal resources. Looming in the background are growing concerns regarding the damaging environmental effects of high rates of fossil fuel combustion (e.g., greenhouse effect and acid rain) and the strategic and economic costs of oil imports. The complacent public attitude and the impending problems are on a collision course. The long lead time required to develop new energy-producing technologies (or improve existing technologies) virtually guarantees that recovery from the "collision" will be traumatic unless appropriate preparation is made. Choices made now will determine what options will be available in the future.

Planning energy policy in the United States is exacerbated by the sheer size of the economy and the resulting institutional inertia. The U.S. gross national product (GNP) is equal to the combined total of the next four largest Western nations (World Bank 1988, p. 227). Major sources of uncertainty affect the future energy system.

- One uncertainty flows from our inability to predict the level of future energy use.
- The other uncertainty flows from an array of environmental, health, and safety factors that will influence the energy system.

To maintain its socioeconomic well-being and to carry out its leadership role in the free world, the United States must have a balanced, resilient national energy policy with sufficient options to support economic growth and to recover quickly from international disruptions, evolving environmental regulations, changes in public policy, or other uncertainties in energy supply. The key contributors to a resilient U.S. electric energy system must include end-use efficiency (conservation), fossil energy (coal, oil, and gas), and

nuclear energy; a modest but important near-term contribution will come from hydroelectric power as well. Each of these major contributors has advantages, limitations, and uncertainties. Collectively, however, they offer the balance and resilience necessary to ensure the energy requirements for a healthy U.S. economy, regardless of the rate of future growth in energy use.

Nuclear energy is making an important contribution to our energy requirements. Currently, 19% of U.S. electricity is produced in 108 nuclear plants with an overall electric generating capacity of 95 GW (DOE 1988, pp. 11, 87; and EEI 1988); 14 more plants are nearing completion. However, completion of these final units marks the end of an era for the nuclear industry in the United States. No more units are ordered or planned. The poor image of nuclear, combined with the recent short-term excess electric generating capacity in the United States, has contributed to what amounts to an unofficial nuclear moratorium in the United States. All new nuclear plant orders since 1973 were subsequently cancelled. Some of the reasons for this situation include:

- Most, probably all, utilities see the investment risk and uncertainty associated with building new nuclear plants as too great in the current environment. Nuclear projects (e.g., Seabrook, Shoreham) may be delayed almost indefinitely by regulatory or political processes without investor recourse.
- A short-term excess electric generating capacity occurred as a result of the decline in rate of growth in electric power demand following the oil price shock of the 1970s.
- Acceptance of nuclear energy by the public and decision makers has been tarnished by
  - the accidents at Three Mile Island (TMI) and Chernobyl,
  - major delays and cost overruns of several recent plants,
  - the relatively poor operating performance of U.S. plants compared with that of Western Europe and Japan, and
  - the complex regulatory system.

The dilemma we face then is that, on the one hand, nuclear power is needed in the future as an important element in a resilient national energy policy; and, on the other hand, nuclear power is not considered to be a viable option by U.S. utilities today. A fundamental reexamination of the nation's Civilian Reactor Program is needed to respond to today's conditions and to prepare for the future.

2.2.2 New Directions for National Nuclear Energy Policy

During most of the 1960s and throughout the 1970s and early 1980s, the U.S. Civilian Reactor Program focused on the fast breeder, principally on developing and building the Clinch River Breeder Reactor Plant (CRBRP). Typically, 75% or more of the Civilian Reactor Program budget has been allocated to the fast breeder for the past two decades (DOE 1989b). With breeding, nuclear becomes an essentially inexhaustible source of energy. At the time this focus was established, electricity demand was doubling every 10 years, and there were projections of up to 1000 GW of electricity from nuclear energy by the turn of the century. The breeder was perceived as a near-term need.

The oil embargo in 1973 and related economic events dramatically changed energy growth rates. In addition, there is increasing recognition that low-cost uranium resources are

more abundant than originally thought. Today it is apparent that nuclear energy will provide only about 110 GW of our electric power capacity by the turn of the century (NAERC 1988, p. 32). While the long-term need for breeding remains indisputable, on the bases of the growth rate already realized and current projections for the future, it appears that the need and economic incentive for breeding will not emerge before the middle of the next century. Since the CRBRP was cancelled in 1983, the national nuclear R&D program has suffered dramatic loss of budget and political support, while nonetheless continuing to focus heavily on the infrastructure that supported that technology.

The justification for spending the bulk of our U.S. Civilian Reactor Program resources on the fast breeder is no longer valid. A new direction and a new set of priorities based on today's realities are needed.

The situation today is characterized by the worldwide concern over environmental and safety issues. There is an increasing recognition of and concern with the environmental impact of a growing world economy relying heavily on fossil-fuel combustion—e.g., the greenhouse effect, acid rain, ash disposal. The increased apprehension regarding reactor safety has heightened both interest and debate surrounding advanced reactor concepts which emphasize "passive" safety features. With the new U.S. administration, there is an opportunity to revisit and reformulate national energy policy—a normal part of the political process soon after an administration change.

Renewed public and policy-maker interest in nuclear energy must be met by a positive commitment to respond aggressively to overcome weaknesses and mistakes of the past and establish a new direction consistent with society's needs. We believe that a new agenda for the Civilian Reactor Program should focus in the near-term on two major thrusts.

- Derive maximum benefits from existing and advanced light-water reactor (LWR) technology.
- Demonstrate the modular high-temperature gas-cooled reactor (MHTGR), an advanced concept featuring a high degree of passive safety.

And, from a long-term perspective, the agenda should retain a strong base-technology effort to prepare for the time when uranium resource extension is needed.

2.2.3 Derive Maximum Benefits from Existing and Advanced LWR Technology

The overwhelming majority of existing reactors around the world are light water reactors based on U.S. technology (IAEA 1988). The United States has a cumulative investment of over $150 billion in about 122 LWR plants (DOE 1986a) and an almost equal investment in the engineering and manufacturing capability to support this technology. It is in our national interest to derive the maximum benefits possible from this economic investment and technology base.

The two primary avenues for gaining the maximum benefits from LWR technology are to (1) improve the operating performance of existing LWRs and (2) deploy a new generation of advanced LWRs.

2.2.3.1 Improve operational performance

As previously noted, the availability and performance of U.S. reactors has not lived up to expectations for the technology or to performance in Western Europe and Japan. The average load factor for all U.S. reactors today is 58.8%, while the average for all other countries is 70.1%, with median of 75.1% (which is also the current performance rating in Japan) (NEI 1988, p. 19). The Japanese had a similar performance problem in 1975 with an average load factor below 50%. They embarked at that time on a major seven-year LWR Improvement and Upgrade program which led to the improved performance and to the successful nuclear energy program they now enjoy. There is an enormous potential public benefit from a U.S. program to improve the performance of existing reactors with the goal of achieving an average load factor of at least 75% (comparable to Japan and Western Europe). We estimate that achieving such an improvement in overall performance would

- provide almost 30% more electric power from these plants, resulting in unit power cost reduction to the ratepayers from existing nuclear plants of at least 20% (a total cost savings of about $40 billion) between now and the year 2000 (SCI 1988);
- reduce the generating capacity required during that period by 25 GW, resulting in a direct cost avoidance of at least $40 billion; and
- improve safety by reducing the number of challenges to the safety systems and the operator.

The obvious question arises, "why isn't more being done in this regard if the benefits are so large and so obvious?"

Many have viewed these goals as the responsibility of the utilities. However, U.S. utilities have neither the in-house expertise nor the resources to develop the needed technology. Historically, utilities have been users of technology, not developers. Their profits are regulated by public utility commissions (PUCs) that are focused on near-term rates—not long-term improvements. If utility-funded R&D is not immediately successful, it may be ruled imprudent and excluded from the rate base.

Because secure and economical energy supply is a vital national interest, we believe that DOE is responsible to the public for taking the lead within the Civilian Reactor Program (1) to initiate appropriate R&D activities (for which DOE has both the charter and the personnel within the national laboratories); (2) to promote a cooperative effort with the private sector (industry and utilities) to implement improvements; and (3) to promote in cooperation with the Nuclear Regulatory Commission a regulatory environment that is receptive and supportive of industry efforts to implement technology improvements.

Everyone benefits from such a program: the industry, the utilities, the government, the taxpayer, and the utility ratepayer. In short, improving operating performance will lower the cost of electricity from nuclear plants. With rates regulated by public service commissions, the ratepayer would share with the utility in the direct financial benefit of reduced power cost. The government and the taxpayer would enjoy the indirect benefits of improved safety and reduced trade deficit. The industry would be stronger and better able to compete in both domestic and foreign markets.

The following three complementary activities are required to achieve the goal of higher operating performance.

- First, U.S. industry should initiate an aggressive effort to identify and introduce technology improvements based on experience that can be effectively acquired and/or adapted to existing plants. As previously noted, Japan and some Western European countries have already implemented improvements to U.S. technology, but few of those improvements have been implemented in existing U.S. reactors. For example, the Japanese have automated fuel handling during refueling to reduce outage time.
- Second is the need to apply new and emerging technologies that have the potential to improve the operation and maintenance of LWRs. Advanced R&D in strategic technologies—such as advanced controls and automation, materials and structural design, shielding, physics, fuels, robotics, seismic—supports and undergirds the technology improvements necessary to solve problems associated with the causes of low availability. For example, existing analog control systems are old and unreliable. In some instances, component parts for such systems are no longer available. The introduction of advanced automated digital control systems offers the potential for both improved reliability and improved human-machine interface. New advanced instrumentation and diagnostics in conjunction with these modern digital control systems have the potential to contribute to a whole new maintenance philosophy based on monitoring degradation in performance of key components—such as steam generators, pumps, and valves—with time. Research in these strategic technologies will, in the long run, enhance all reactor concepts, but near-term efforts should have the support of existing LWRs as their highest near-term priority.

  A collaborative approach should be pursued with government-sponsored research and industry implementation of the technology. Joint definition of research goals would provide the basis for a strong and beneficial collaboration.
- Finally, an equally important activity is to establish institutional and regulatory reforms to better manage the nuclear enterprise. The regulatory process is slow, cumbersome, and bureaucratic. Licensing reform is critical to the future of nuclear energy. Prelicensing of standardized plants may be an appropriate basis for the licensing process. Without suggesting any prescriptive form for the solution, it is apparent that institutional reforms are needed. These needs require the participation and cooperative effort of representatives of government, industry, regulators, and the public at large.

  At this time, the opportunity for public participation occurs late in the process after all development and siting decisions have already been made. Only through intervention or litigation can the public participate, and by this time the issues are often so highly polarized that there is little chance for compromise or mutual understanding. We must find a better, more open decision-making process that brings representatives of interested parties into the decision-making process earlier and at more levels. For instance, laying the groundwork for ultimate public acceptance of new and improved nuclear technologies suggests public involvement not only for specific siting decisions but also for near-term R&D technical directions and choices. Research is needed to give guidance on the nature, timing, and scope of constructive public involvement based on past experiences and current theory in developing durable public decisions.

2.2.3.2 A new generation of advanced LWRs

In addition to improving the performance of existing LWRs, maximizing the benefits of established LWR technology also includes advanced LWR (ALWR) designs. In addition to independent private sector initiatives, EPRI and DOE are collaborating on an ALWR program focused on two design concepts—an evolutionary plant design and a more developmental design approach that incorporates new passive safety features and systems (C. W. Forsberg, *New Developments in Reactor Design,* paper presented at WATTec '89 Meeting, Knoxville, Tenn., Feb. 14-17, 1989; McGoff 1988; Stahlkopf, DeVine, and Sugnet 1988). The evolutionary ALWR is based directly on existing LWR designs with improvements such as digital control, improved man-machine interface, and improved components and systems. In parallel, the program is pursuing advanced developmental designs that are smaller and simpler and that incorporate certain passive safety features.

The ALWR program deserves continued support because it builds on the existing LWR technology base and the thousands of reactor-years of worldwide operating experience to attain an improved product. Economic benefits of using the existing body of LWR experience, research base, design codes, and probabilistic data are quite significant. However, greater consideration should be given to advanced, passive-design features that could reduce reliance on active components and human intervention to achieve safety.

Existing LWR designs incorporate active safety systems, providing defense in depth to protect the public and the investment by virtue of system diversity and redundancy. These systems are based on valid engineering principles of proven worth. But relying primarily on active safety systems may not provide the fundamental safety improvements needed to gain public and investor acceptance. Furthermore, incorporation of a high degree of passive safety in future ALWRs can reduce complexity and perhaps lead to a more cost-effective design.

While the current design approach is a manageable system that has rendered existing LWRs safer than virtually all other major industrial activities, passive safety improvements in future ALWRs are desirable, and may be necessary, to enhance public and investor confidence.

2.2.4 Demonstrate Modular High-Temperature Gas-Cooled Reactor (MHTGR)

A debate has developed within the nuclear community over new reactor concepts. This debate focuses on the concern that espousing the need for "passively" safe nuclear reactors may cast doubt on the adequacy of the safety of existing LWRs. In addition, the view is presented that there is no need to pursue levels of safety greater than those achieved and achievable with ALWRs, because these technologies already meet stringent safety goals.

A broad view of technology progress will demonstrate that these concerns are unwarranted. In an analogous fashion, one can note that the DC-3 was and remains an excellent aircraft. It served reliably and well as the workhorse of the airline industry over many decades (some DC-3s are still in service today). But, if aerospace technology (which is heavily dependent on government support) had not developed beyond a hypothetical advanced DC-3, growth and development of that industry would have been stifled and the public less well served. A similar analogy could be drawn for almost any technology serving mankind. Technologies either progress through innovation or they atrophy and die. With

each new generation of technology, we should strive for enhanced performance, economics, and safety.

New concepts that offer promise for new markets are crucial to the future of nuclear energy and an essential part of fostering competition and creating options. The most promising near-term advanced concept currently under development is the MHTGR, and we believe demonstration of this technology should be a high-priority goal.

Plant design simplification based on the passive features and factory fabrication should substantially overcome the economic disadvantages of smaller size. Conceptual design of the MHTGR has been completed (DOE 1986b), and technology development requirements have been identified (Homan and Simon 1988; Homan and Neylan 1988). While the modular design and unique passive safety features are new, the concept is based on over 30 years of experience and research in the United States, the Federal Republic of Germany, and, more recently, Japan. Significant interest is emerging in the Union of Soviet Socialist Republics, China, Italy, Israel, and throughout the rest of developing world. Demonstrating this technology could restore the U.S. lead role and establish a new nuclear industry to complement the LWR in the U.S. market and around the world.

The key passive safety features of the MHTGR design are the high-temperature structural integrity of the fuel particles and the thermal properties of the reactor core. The core consists of multilayered ceramic- and carbon-coated fuel particles placed in graphite structural blocks. Fission products are retained within the fuel particles, and their ceramic coating can withstand extremely high temperatures without damage (up to 1600°C) (Goodin et al. 1988). Considerable experimental evidence in both the United States and the Federal Republic of Germany shows that the ceramic-coated fuel particles remain structurally sound and retain their fission products through any MHTGR accident. These desirable results are attained because the core's reactivity feedbacks passively limit heat generation and its heat dissipation properties keep fuel-particle temperatures below damaging values. In the unlikely event that all active cooling systems become inoperable, decay-heat removal would be provided by a passive, natural-circulation system transferring heat from the pressure vessel wall to ambient air, or even to earth surrounding the underground silo, if required. This passive decay-heat removal system is adequate to protect the fuel particles even if helium coolant were lost from the reactor.

Because of its modest unit size and passive safety features, the concept is well suited to export markets, especially in developing countries. Further, the long-term potential for this concept uniquely offers future applications in high-temperature, high-efficiency gas turbine energy conversion systems (efficiencies 50% higher than those of current reactor systems) and high-temperature process heat systems (for production of liquid and gaseous fuels from coal or hydrogen fuel from water) (Staudt and Lidsky 1987; Kasten 1988).

The recent recommendation by the U.S. Secretary of Energy that a new production reactor (NPR) based on MHTGR technology be built may provide the vehicle for demonstration of this concept. However, the U.S. Congress has not acted on this recommendation, and it would be premature to draw any firm conclusion regarding the NPR program.

2.2.5 R&D for the Long Term

The major near-term thrusts have been emphasized in this agenda because they are of overriding importance. Long-term R&D is irrelevant if we do not reestablish the viability of nuclear energy in the United States soon. Having acknowledged that, we would be

shortsighted if we fail to prepare to respond to uncertainties that may be imminent. When the near-term goals outlined above are accomplished, there will inevitably be a need for breeder technology.

To this point, only slight reference has been made to the greenhouse effect. The near-term thrusts discussed previously are needed independent of this issue. However, the future rate of deployment of nuclear plants may well be influenced by this issue.

Some scientists claim 95% probability that the greenhouse effect can occur and that CO_2 is earth's central environmental concern. They urgently call for drastic action to address the issue worldwide. Other scientists are more cautious—calling instead for additional data and further analysis and modeling. Even so, the question is not whether we have a problem, but when the impact will occur.

If it is necessary to control CO_2 accumulation in the atmosphere over a 25- to 40-year period, a prudent approach to accomplish this goal requires intensive application of both conservation measures and nuclear energy. If the world energy demand can be maintained at its current level (which is all but impossible in light of the emerging growth of developing countries) through intensive conservation measures, then the addition of about 2500 GW of nuclear energy would be required to replace coal, oil, and natural gas to stabilize the level of atmospheric CO_2 (ITSR 1988). If world energy demand continues to grow at a modest rate, then the addition of up to 5000 GW of nuclear energy would be required to attain the same goal (ITSR 1988).

The difference between the moderate-growth projections of today and the potential impact of such an aggressive response to the greenhouse issue is a major uncertainty with enormous consequences. A nuclear reactor deployment plan of the magnitude discussed above would dictate a substantially more aggressive effort to demonstrate commercial-scale nuclear fuel-recycle and breeder technology.

These uncertainties suggest that it is prudent to continue R&D in breeder and fuel-reprocessing technology to maintain the technology base for future implementation and to undergird U.S. participation in international decisions concerning safeguards. By maintaining a modest long-term R&D program, we retain the flexibility and resilience necessary to respond quickly when the need to accelerate this technology development is recognized.

The United States has spent about $16 billion over the last three decades on breeder reactor technology. The liquid-metal- (sodium-) cooled fast breeder reactor (LMFBR) is the system of choice for breeding (ANS 1987). This technology has also received major development effort in Western Europe (led by France) and in Japan (IAEA 1985). Experimental or demonstration reactors have been completed in each major program. Much work has also been done to develop the technology for fuel reprocessing for the breeder (SAEN 1987). The bulk of the technology development effort for both the breeder reactor and for fuel reprocessing has been completed.

The continuing R&D effort should be aimed at a broad spectrum of base technology development to maintain expertise and support advances through a process of exploring innovative design features to enhance the safety and economics of the breeder reactor and fuel-recycle technology. Past experience has shown that much of this base technology development can be applied to existing and near-term plants in addition to the long-term benefit.

In view of the potential long-term nature of the goal and the high cost of development, an international program should be explored—combining U.S., European, and Japanese efforts into an integrated R&D program. Modest cooperative research efforts are

already under way with Japan, and discussions are in progress on more extensive cooperation.

A major issue not addressed in this discussion is nuclear waste management and disposal. A separate companion paper on this topic is being developed. There is no doubt that this issue also will need future R&D support in addressing technical, siting, transportation, and public-acceptance issues.

2.2.6 Civilian Reactor Program Budget

Energy is a $400-billion/year business in the United States. It is one of the largest sectors in our industrial economy. The impact of energy is felt throughout our country in every state, in every business and industry, and in every household. Even modest improvements in energy technology have enormous potential economic payoff. We believe that a substantially larger R&D effort in all sectors of energy technology is justified and would pay back handsomely.

In this context, our recommendation would be a fourfold budget increase in the Civilian Reactor Program. Such an increase is, in our opinion, fully justified by the benefits to be derived from the R&D. Unfortunately, the realities of the current budget environment make such a recommendation unreasonable from a pragmatic standpoint.

What we have recommended for the near term is a major restructuring of priorities as reflected in this proposed new agenda and a moderate increase in the annual budget. Some further growth in the annual budget may be needed in the future.

Table 2.2-1 presents a breakdown of our near-term budget recommendations for the Civilian Reactor Program. This plan calls for an annual budget on the order of $340 million. We believe that a level of effort in this range is critical to make progress in key areas outlined in our discussion. In addition, federal participation in a prototype demonstration project for one or more new concepts will be needed over the next decade.

Demonstration project funds are not identified with any specific year. The $500 million is proposed on the basis that a four-module MHTGR of 560 MW(e) would probably cost about $1.5 billion for a first-of-a-kind plant. We suggest that DOE provide one-third of the cost of this commercial prototype demonstration. These funds would probably not be expended until the mid-1990s.

2.2.7. References for Section 2.2

ANS (American Nuclear Society) 1987. "Fast Breeder Systems, Experience Gained, and Path to Economic Power Generation," *Intl. Conf., Richland, Wash., Sept. 13-17, 1987,* ANS Order 700122, American Nuclear Society, LaGrange Park, Ill.

DOE (U.S. Department of Energy) 1986a. *An Analysis of Nuclear Power Plant Construction Costs,* DOE/EIA-0485, Energy Information Administration.

DOE (U.S. Department of Energy) 1986b. *Preliminary Safety Information Document for the Standard MHTGR,* DOE-HTGR-86-024, Vols. 1-5.

DOE (U.S. Department of Energy) 1988. *Monthly Energy Review,* DOE/EIA-0035(88/12), Energy Information Administration.

DOE (U.S. Department of Energy) 1989a. *1989 Annual Energy Outlook,* DOE/EIA-0383(89), Energy Information Administration.

DOE (U.S. Department of Energy) 1989b. *DOE Civilian Reactor Budget, 1968-1988.*

Table 2.2-1. Near-term budget recommendations for the Civilian Reactor Program

	Cost	
	Item ($\$ \times 10^6$)	Total ($\$ \times 10^6$)
Annual budget		
Crosscutting technology and analysis		50
Generic technologies[a]—base technology, supportive of all concepts	40	
Institutional and economic research and analysis	5	
Assessment of new and innovative concepts/ideas	5	
Light-water reactor program		90
R&D to improve existing light-water reactor performance and safety	40	
Developmental and advanced light-water reactor design	30	
Advanced component development and testing	20	
High-temperature gas-cooled reactor program		110
Base technology development	25	
Component development and testing	35	
Modular high-temperature gas-cooled reactor design	40	
Advanced applications (gas turbine and process heat)	10	
Fuel recycle and breeding program		90
Oxide fuel recycle	5	
Metal fuel development and recycle	60	
Advanced liquid-metal reactor conceptual design	15	
International research & development collaboration	10	
Total annual budget		340

Table 2.2-1. Continued

	Cost ($ × 10⁶)
Demonstration project budget	
Demonstration project	500
Matching funds are proposed to support a commercial prototype of an advanced, innovative reactor concept. U.S. Department of Energy matching funds on the order of one-third to one-half of the first-of-a-kind project cost would be subject to an acceptable private sector initiative, funding commitment, and project leadership. The modular high-temperature gas-cooled reactor concept appears to be the first candidate for such a demonstration. A similar demonstration project may be needed for an advanced, innovative light-water reactor or liquid-metal reactor in the future.	

[a]Includes items such as materials development, modular construction, seismic concerns, shielding, advanced controls and diagnostics, physics code developments, robotics, and man-machine interface.

EEI (Edison Electric Institute) 1988. *1986 Capacity and Generation of Non-Utility Sources of Energy,* Washington, D.C.

Kasten, P. R. 1988. "Very-High-Temperature Reactors for Future Use," DOE-HTGR-88-095, ORNL/TM-10850, Oak Ridge National Laboratory, Oak Ridge, Tenn.

Goodin, D. T., et al. 1988. "The Passive Safety Characteristics of Modular High-Temperature Gas-Cooled Reactor Fuel Elements," *Proc. ANS Top. Meet., Seattle, May 1988,* American Nuclear Society, LaGrange Park, Ill.

Homan, F. J., and Neylan, A. J. 1988. "MHTGR Technology Development Plan," *Proc. 23rd Intersoc. Energy Convers. Eng. Conf., July 31-Aug. 5, 1988, Denver, Colo.,* Vol. 1, ASME, New York.

Homan, F. J., and Simon, W. A. 1988. "Status of International HTGR Development," *Proc. 23rd Intersoc. Energy Convers. Eng. Conf., July 31-Aug. 5, 1988, Denver, Colo.,* Vol. 1, ASME, New York.

IAEA (International Atomic Energy Agency) 1985. "Status of Liquid Metal-Cooled Fast Breeder Reactors," IAEA Technical Reports Series 246, Vienna, 1985.

IAEA (International Atomic Energy Agency) 1988. *Nuclear Power Reactors in the World,* UNIPUB, Lanham, Md.

ITSR (Institute for Technology and Strategic Research) 1988. *Proc. Intl. Conf. Enhanced Saf. Nucl. React.,* Aug. 9-10, 1988, ITSR Report 008, School of Engineering and Applied Science, The George Washington University, Washington, D.C.

NAERC (North American Electric Reliability Council) 1988. *1988 Electric Supply and Demand,* Princeton, N.J.

NEI (Nuclear Engineering International), *World Nuclear Industry Handbook,* 1988, Reed Business Publishing, Sutton, Surrey, England.

SAEN (Societe Afrancaise d'Energie Nucleaire) 1987. *Intl. Conf. Nucl. Fuel Reprocess. Waste Manage.,* Paris, France, Aug. 24, 1987, Paris Publication, Paris, 1987.

SCI (Science Concepts, Inc.) 1988. *Benefits of Achieving Increased Load Factors at U.S. Nuclear Generation Stations,* Washington, D.C.

McGoff, D. J. 1988. "Light Water Reactors for the 1990s and Beyond," *Proc. ANS Top. Meet. Saf. Next Gener. Power React., Seattle, Wash., May 1-5, 1988,* American Nuclear Society, LaGrange Park, Ill.

Staudt, J. E., and Lidsky, L. M. 1987. "An MGR Brayton-Cycle Power Plant Design," *22d Intersoc. Energy Convers. Eng. Conf., Aug. 10-14, 1987, Philadelphia,* American Institute of Aeronautics and Astronautics, New York.

Stahlkopf, K. E., DeVine, J. C., and Sugnet, W. R. 1988. "U.S. ALWR Programme Sets Out Utility Requirements for the Future," *Nucl. Eng. Int.* 33(412), 16-19.

World Bank 1988. *World Development Report, 1988,* Oxford University Press, New York.

2.3 FUSION ENERGY *[by J. Sheffield (Leader), with input and support from C. Baker (ANL), L. A. Berry, S. Bodner (NRL), H. Bowers, D. Cartwright (LANL), T. Fessenden (LBNL), H. Furth (PPPL), W. Hogan (LLNL), D. Keefe (LBNL), J. Larsen (KMS Fusion), R. Linford (LANL), G. Logan (LLNL), R. McCrory (LLE), E. Storm (LLNL), and J. P. VanDevender (SNLA)]*

When the lighter elements collide, they can fuse to create heavier elements and release a large amount of energy—many megaelectronvolts (1 MeV = 10^6 volts) per nucleon. In the sun, a mass of hot, dense hydrogen is contained by gravity, and the temperature is sustained by fusion power. The conditions to release fusion energy on earth have been created in a number of ways using the isotopes of hydrogen—deuterium (D) and tritium (T). The main reactions of interest are shown in Table 2.3.-1.

The realization of commercial fusion is an exciting prospect because the source of the energy is essentially unlimited.

The potential applications of fusion include

- production of electricity,
- breeding of fissile fuel and other nuclear materials,
- production of hydrogen and other chemical products,
- transmutation or "burning" of nuclear wastes,
- production of radioisotopes,
- radiation processing of materials, and
- space power and propulsion.

The key features of fusion are

- advantages
  —unlimited, ubiquitous source;
  —potential for environmental superiority over other nuclear and fossil systems; and

Table 2.3-1. Fusion reactions

Reaction	Energy release (MeV)	Threshold energy (keV)[a]
$D + T \rightarrow {}^4He + n$ (14.1 MeV)	17.6	4
$D + D \rightarrow T + p$	4.0	35
$D + D \rightarrow {}^3He + n$ (2.5 MeV)	3.25	
$D + {}^3He \rightarrow {}^4He + p$	18.2	30

[a]1 keV is equivalent to a temperature of about 10 million kelvins.

— much safer than fission systems.

- disadvantages
  —complicated and sophisticated technology and
  —reactor not portable—except in space.
- unknowns
  —cost and
  —timing.

The fusion of D-T occurs at the lowest temperatures, and this option is the current focus of the program. Because tritium decays radioactively, it occurs rarely in nature; in a reactor, it will be produced by using the fusion neutrons to bombard a lithium blanket surrounding the reactor core. The principal physics challenges in realizing a practical reactor are the need to (1) heat the D-T fuel to the fusion temperatures of about 100 million degrees Kelvin and (2) contain the hot fuel away from material walls, which could cool it. Specialized materials development represents a major technological challenge. While there are vast quantities of lithium on earth, the alternative of using deuterium alone has the attraction that the reserves of deuterium are essentially unlimited and the lithium blanket is not needed. Deuterium fusion requires higher temperatures, and this is a longer term goal. A further alternative, which minimizes neutron production and radioactive inventory, is the use of a mixture of deuterium and helium-3. It has the difficulty that the closest source of large quantities of helium-3 is the moon. Alternative fuels to D-T are discussed in NAS (1987a). A far more speculative possibility for fusion is to use mu-mesons to catalyze the D-T reaction in a hot, dense gas of D-T (Jones 1988).

There are two principal approaches to confining the hot fusing material (a plasma of free electrons and positive ions at fusion temperatures).

1. Magnetic confinement uses the property that the motion of the charged particles of a plasma is constrained by a magnetic field (ANL 1987). The contained plasma is heated by electric currents, particle beams, electromagnetic radiation, or compression. In the ignited state, the plasma heat will be maintained by the charged-particle reaction products.
2. Inertial confinement is the approach in which a pellet of fusion material is compressed and heated, by intense laser or particle beams, in a short enough time that the fusing material is held together by the inertia of the pellet mass (NAS 1986). A hydrogen bomb uses inertial confinement.

Excellent progress has been made in both fields of research, and reactor-level temperatures and confinement have been achieved. Substantial advances have been made in the development of fusion technology.

In summary, fusion offers the possibility of safe, limitless power, with a lower environmental impact (Holdren 1986).

- Fusion has the potential to be an important contributor to central electricity generation in the twenty-first century, particularly if the acid rain and carbon dioxide problems cause limitation of the use of fossil fuel and if public concerns limit the deployment of fission.

- In the event that fission assumes a stronger role in power production, the fusion-fission hybrid (NAS 1987b) has the potential to be an efficient fuel factory for fission plants (see Sect. 2.2).
- The main socioeconomic issues are the likely high capital cost of either a power station of a fission fuel factory and the public acceptance of alternative energy sources. There is an effective economic advantage in the lower environmental impact. In considering the capital cost, allowance should be made for the long lifetime of much of the plant (Weinberg 1985).
- The immediate primary need is to complete the base physics and technology studies to allow a proper assessment to be made of fusion's potential.

Some of the major laboratories involved in fusion research are listed below and are identified by the shortened names used in this report.

ANL	Argonne National Laboratory
GA	General Atomics
HEDL	Hanford Engineering Development Laboratory
INEL	Idaho National Engineering Laboratory
KMS	K.M.S. Fusion
LANL	Los Alamos National Laboratory
LBNL	Lawrence Berkeley National Laboratory
LLE	University of Rochester Laboratory for Laser Energetic
LLNL	Lawrence Livermore National Laboratory
MIT	Massachusetts Institute of Technology
NRL	Naval Research Laboratory
ORNL	Oak Ridge National Laboratory
PPPL	Princeton Plasma Physics Laboratory
SNL	Sandia National Laboratory
Varian	Varian Corporation

2.3.1 Magnetic Confinement Fusion *[by C. Baker (ANL), L. A. Berry (ORNL), H. Furth (PPPL), R. Linford (LANL), G. Logan (LLNL), and J. Sheffield (ORNL)]*

The magnetic fusion program is conducted by national laboratories, universities, and industry, under the auspices of DOE's Office of Fusion Energy. Design studies of power-producing reactors and generic magnetic fusion considerations are used to guide the program. For example, the requirements have been established for a reactor [500-1000 MW(e)] to be competitive with current fission and fossil systems [i.e., cost of electricity (COE) within 20%]. The realization of fusion's potential is a major scientific and technological challenge. However, studies show that each physics and technology requirement should be achievable, and the principal uncertainty lies in the reliability and maintainability of the complete reactor. This uncertainty cannot be resolved until a demonstration reactor (DEMO) has been operated. Therefore, the focus of the program is on providing the database upon which the decision to proceed with a DEMO could be made. In a typical conception of a magnetic fusion reactor, a D-T plasma, at a density of $\approx 10^{20}$ particles/m^3 and a temperature of 100 million degrees Kelvin, is contained in a "magnetic bottle" at 4 to 8 teslas, and the temperature is sustained by the power produced by the fusion reactions. The fusion neutrons are trapped in a blanket containing lithium,

which surrounds the plasma to produce tritium and to heat the primary working fluid (Fig. 2.3-1).

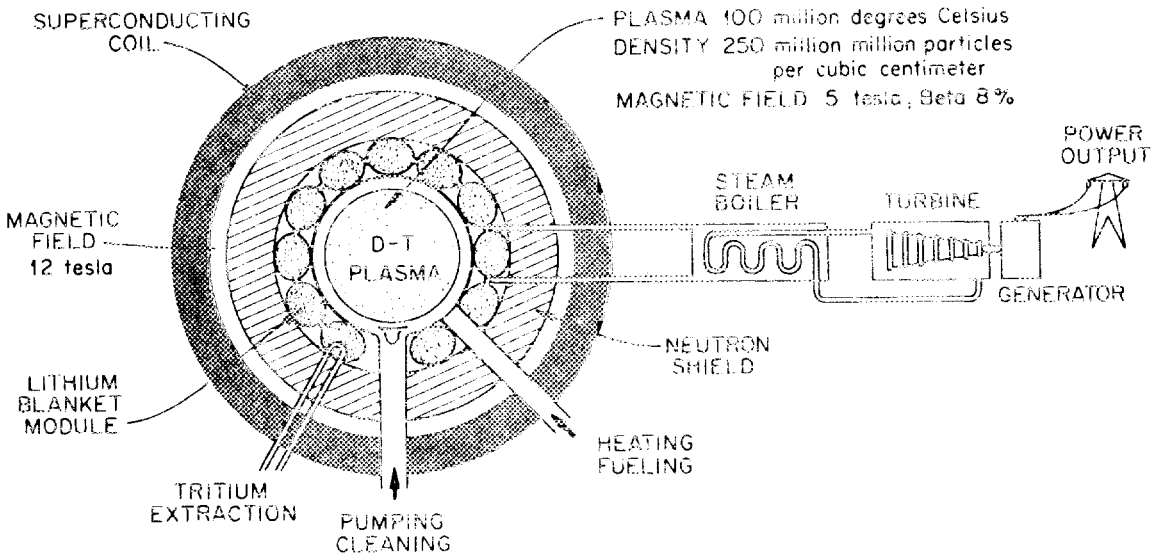

Fig. 2.3-1. Conceptual design of a fusion reactor (ORNL-DWG 87-2692R FED).

Various magnetic configurations have been tested. Most current designs are based upon the use of closed toroidal field lines, which form nested magnetic surfaces. In such configurations, the loss of particles and heat is minimized. The tokamak is the principal research vehicle. It uses a strong toroidal magnetic field (produced by external coils) in combination with a weaker field (produced by a toroidal current flowing in the plasma). Other toroidal devices, in earlier stages of development are (1) the reversed-field pinch and compact tori, in which the plasma current provides the main field and externally applied fields are weaker; and (2) the stellarator, in which all the fields are produced by external coils. A linear system, the mirror, has been studied extensively and may have advantages for some fusion applications. The more speculative, dense Z-pinch is in a much earlier stage of development.

Achievements and long-term plan

- physics parameters for a typical reactor;
- temperature of about 100 million degrees Kelvin for a D-T plasma;
- the quality of confinement = density × energy confinement time (the decay time of the temperature if the heating were turned off), $\geq 2 \times 10^{20}$ m^{-3} s;
- beta, which is the ratio of the plasma pressure to the magnetic pressure, $\geq 10\%$; and
- high duty factor or steady state operation, with low recirculated power.

The reactor physics parameters are compared with the achievements of tokamaks and with research devices of the next generation in Table 2.3-2. Good progress is being made toward achieving the reactor goals.

Table 2.3-2. Tokamak physics achievements[a]
(volume average values)

Achievement		CIT - ITER - reactor requirement
	(not simultaneous)	(simultaneous)
Pulse length, s	20	5 to 200 ($ or high duty factor)
Confinement, m^3/s	1×10^{20} TFTR (PPPL) Alcator-C (MIT)	2×10^{20}
Ion temperature, keV	~10 TFTR (PPPL)	10
Beta, %	8 DIII-D (GA)	6 to 10

[a]CIT = Compact Ignition Tokamak. ITER = International Thermonuclear Experimental Reactor. MIT = Massachusetts Institute of Technology. TFTR = Tokamak Fusion Test Reactor. PPPL = Princeton Plasma Physics Laboratory. DIII-D = Doublet III-D Tokamak. GA = General Atomics.

It is expected that the full reactor requirements will be met in short pulses for the first time in the Compact Ignition Tokamak (CIT), a device to be constructed at PPPL. The International Thermonuclear Experimental Reactor (ITER) is proposed as a multinational program to test technologies under reactor conditions. Elements of the proposed U.S. program are shown in Fig. 2.3-2. Within the next 20 years, it is expected that the combination of ITER and a number of facilities, to improve the configuration and to test plasma technologies and nuclear technologies, will provide the basis to assess the commercial potential of magnetic fusion (DOE 1985). In the longer term, the goal is to develop a safe, efficient system that will have little adverse impact on the environment.

To meet the goals of economic power or fissile fuel production, six principal areas need development. Most of these areas have features in common with the needs of other programs. The technology elements are shown in Table 2.3-3.

Significant achievements include

- A variety of effective heating methods involving particle beams and electromagnetic radiation (1 MHz to 100 GHz) have been developed (LBL, MIT, ORNL, PPPL, Varian).

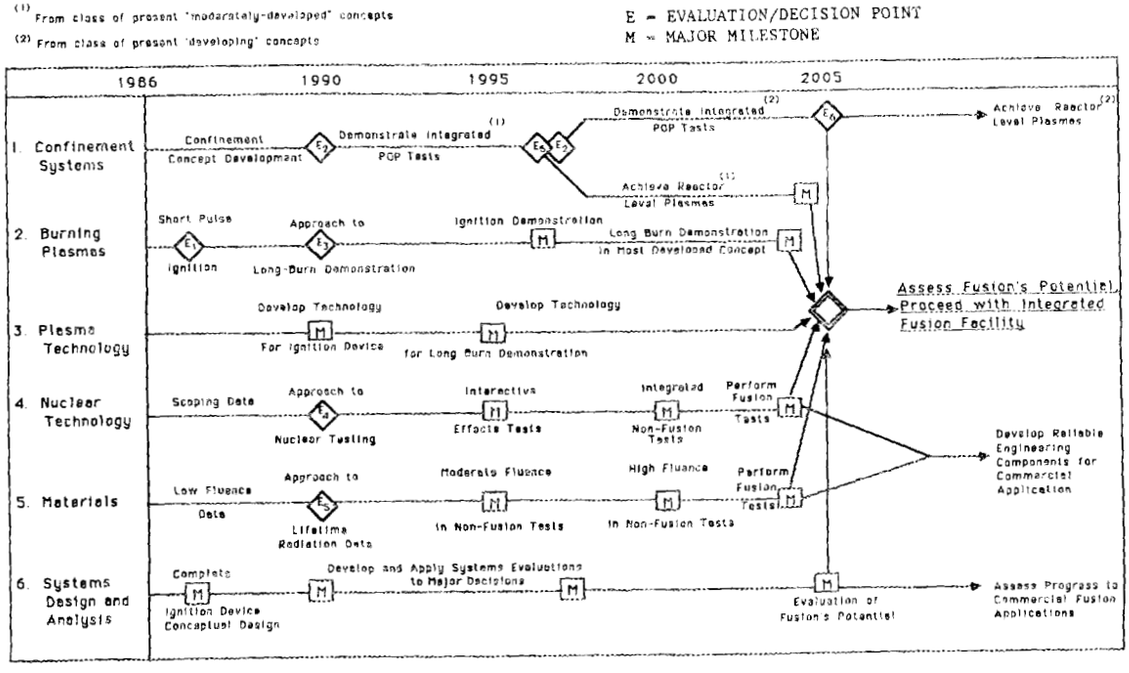

Fig. 2.3-2. The U.S. experimental program strategy in magnetic fusion.

- Fueling using pellets of solid hydrogen, accelerated up to 2000 m/s, has proven effective (ORNL).
- Feedback control of the plasma position and shape and noninductive current drive have been demonstrated (MIT, PPPL).
- Improved stainless steels to handle the 14-MeV neutron flux have been developed, and work is under way on alloys with low activation potential (HEDL, INEL, ORNL, University of Wisconsin).
- Tritium breeding and high-efficiency tritium extraction have been tested in lithium compounds (ANL).
- A complete tritium processing loop, with a 100-g inventory, has been tested at 1 kg/d in the Tritium Systems Test Assembly, under an International Energy Agency (IEA) bilateral agreement (LANL).
- Work has begun on remote handling, and a variety of assembly and disassembly techniques have been developed (INEL, ORNL).
- In the IEA Large Coil Task, six 8-tesla superconducting toroidal coils of one-half the ITER scale areas were tested successfully to 9 teslas (ORNL).

A recent assessment (OTA 1987) by the Office of Technology Assessment (OTA) is an independent review of magnetic fusion, which has great relevance to this study. The overview of the OTA report is given in Sect. 2.3.3.

Table 2.3-3. Technology elements[a]

Technology area	Crosscut area
Coil system ("simple," efficient plasma confinement)	Plasma processing
— superconducting coils	General superconducting coil applications
Control (density, temperature, plasma purity)	
— Pellet fueling	SDI
— Particle and electromagnetic radiation heating	Communications
— Divertor/pumped limiter	Materials processing
Materials (low activation, radiation resistant)	General advanced material development
— Targets/limiters	
— First-wall/blanket	Inertial fusion
Blanket	
— Net tritium breeding from lithium	Inertial fusion
— Fissile material production	
Maintenance	
— Effective shielding	Inertial fusion
— Remote handling	Fission

[a]SDI = Strategic Defense Initiative.

2.3.2 Inertial Confinement Fusion *[by S. Bodner (NRL), D. Cartwright (LANL), T. Fessenden (LBL), D. Keefe (LBL), J. Larsen (KMS Fusion), and J. P. VanDevender (SNLA)]*

Inertial confinement fusion (ICF) offers a source of energy in which a small pellet of fusible materials [the target (in current experiments deuterium and tritium)] is compressed and heated in an extremely short time (nanoseconds) by a laser or particle beam (driver) so that substantial fusion energy is released. Substantial advances have been made in (1) demonstrating that in scaled, high-gain targets the driver-target interaction conditions required for high-gain performance can be achieved and (2) the development of targets. A principal near-term challenge is to develop a low-cost, efficient driver. In the longer term, the challenge is to develop the tritium generation and heat removal system, which together with the other components will constitute the heart of the reactor. Advantages of inertial fusion are that the high-tech driver may be decoupled from the reaction chamber and that neutron-absorbing materials can be used inside the first support structures.

For an economical reactor, D-T pellets of about 5-mm diam are foreseen. The driver should deliver about 3 MJ(<10 MJ) at a repetition rate of ~5 Hz and cost ≤ $500 million. Each interaction should generate a fusion output of a few hundred megajoules. Typically, the product of energy gain and driver efficiency should be ≥10. The pellets may be heated (1) directly by the beams or (2) indirectly by X rays produced when the beams hit a high atomic number target.

The characteristics required of the postcompression pellet are as follows.

- Convergence ratio = (radius before/spark plug radius after) ≥ 40.
- Central temperature ≥ 5 keV, central density × radius (≥0.3 g/cm^2).
- Outer temperature ≤ 1 keV, outer density × radius (~3 g/cm^2) with an average fuel density of 200 g/cm^3.
- Quality of confinement ~ 2×10^{21} m^{-3}/s.

The fusion neutrons, radiation, and blast energy would be absorbed by a stationary or a moving blanket containing lithium.

Achievements

The following accomplishments are significant.

1. With the Nova Laser Facility at LLNL, which currently can deliver 20 to 25 kJ at 0.35- and 0.53-μm wavelengths in 1 ns, the following have been attained.
   - Indirect drive targets with temporally unshaped pulses have achieved nearly one-dimensionally calculated thermonuclear yields with the following.
     — convergence ratio up to 35 achieved,
     — quality of confinement $n(\tau) = 2 \times 10^{20}$ m^{-3}/s,
     — central ion temperature = 1.7 keV, and
     — density = 30 g/cm^3.
   - Direct drive targets attained the following.
     — ion temperature = 10 keV, and
     — yield = 1.8×10^{13} neutrons.
2. With the Omega Laser Facility at LLE, which delivers 2 kJ at micrometer wavelength in 0.75 ns, the following have been achieved.
   - Direct-drive targets with temporally unshaped pulses attained the following.
     — convergence ratio up to 30,
     — quality of confinement $n(\tau) = 3 \times 10^{20}$ m^{-3}/s,
     — central ion temperature = 1.4 keV,
     — density × radius = 0.035 g/cm^2, and
     — density = 30 g/cm^3.
3. At KMS, precisely crafted targets were developed and produced, including glass and polymer containers with a variety of coatings and with both D-T gas and precise cyrogenic fuel layers.
4. Combined successes of a variety of experimental programs in the laboratories and with "major progress . . . in the classified Centurion-Halite program" (NAS 1986) have provided an understanding of target and driver requirements to obtain high-gain (i.e., >100), with a 5- to 20-MJ laboratory driver (Kahalas n.d.). The program will

emphasize driver development in preparation for a Laboratory Microfusion Facility (LMF) (Kahalas n.d.).

Major developments under way

Work is progressing on the following.

- Upgrade NOVA at LLNL to 40 to 80 kJ of 0.35-μm wavelength light in 2- to 3-ns temporally shaped pulses for studying pulse-shaped indirect drive with lasers.
- Develop the Particle Beam Fusion Accelerator (PBFA-II) at SNL for 1000 to 2000 kJ of lithium ions for ignition studies with light beams.
- Upgrade Omega at LLE to 30 kJ of 0.35-μm light for ignition studies with direct drive.
- Develop low-cost, solid state, laser modular prototype at LLNL in collaboration with LLE for an LMP option.
- Develop the positive-polarity lithium ion prototype for a light-ion LMF option on the Hermes III accelerator at SNL.
- Develop low-cost krypton-fluorine (KrF) option for LMF at LANL and NRL.
- Develop heavy-ion accelerator technology at LBL.
- Develop direct-drive target geometry at NRL and LLE.
- Develop target-fabrication techniques and X-ray laser technologies at KMS.
- Develop techniques for improving beam quality at NRL and LLE.

Long-term plans

The plans for 1992-2020 include the following.

- Study near-ignition or ignition targets on PBFA-II with indirect drive and on Omega with direct drive (1992-98).
  - — Build Laboratory (High-Gain) Microfusion Facility (LMF) to demonstrate high gain, produce 100- to 1000-MJ fusion energy from one pellet, and optimize driver-target performance (1995-2000).
  - — Building Engineering Test Reactor (ETR) to drive development of reactor-level technologies, repetitive driver, target production and injection, blanket, reaction chamber, heat removal, tritium recycling, and remote handling (2003-10).
  - — Build demonstration reactor (DEMO) (2015-20).

Technology development goals

To meet the goal of economic power production, five principal areas need development. Most of these areas have features in common with the needs of other programs (see Table 2.3-4).

Table 2.3-4. Development areas

Technology area	Crosscut area
• Target production —Inexpensive target (~10 cents per unit) —Target factory (few targets per second) —Target placement system	 Strategic Defense Initiative tracking systems Tokamak fuel pellet injection
• Efficient driver —10+% efficiency, low capital cost —$\lesssim$3 to 5 MJ, 10-ns, pulse shaped with good-quality beams —Waste heat handling —Long life (~1^{10} pulses)	
• Options —Advanced solid state laser —Gas excimer laser —Light-ion driver —Heavy-ion driver	 Strategic Defense Initiative; battlefield weapon, weapons-effect simulation, or thermo-mechanical response to soft X rays Fusion material testing and processing Food irradiation
• Interface between driver and reaction chamber —Coupling of energy —Radiation/blast environment	 Material needs have much in common with needs of fossil program, advanced engines, and, of course, magnetic fusion
• First-wall/blanket —Materials —Pulsed radiation effects —Tritium breeding —Heat removal	
• Remote handling	Fission and magnetic fusion

ICF may eventually lead to commercial power. A repetitively pulsed ICF plant might generate power directly, perhaps with a magneto-hydrodynamic topping cycle followed by a conventional steam cycle, or it might be used primarily to breed fissile fuel (NAS 1986).

The challenges of ICF are providing unique new tools for the scientific and technological community and for other programs of national importance like SDI. Some examples are large lasers and intensive particle beams, diagnostics for microimplosions, sophisticated computer codes, and laboratory X-ray lasers (DOE 1983).

As stated by the National Academy of Sciences (NAS 1986), "Accelerator technology has made enormous impact across a wide field of research, industrial, and commercial endeavor and new developments are projected to broaden this technology transfer and open up new applications not previously possible or economically attractive . . . In order to continue to reap the benefits and spin-offs from this area of technology, an expanded long-term funding commitment is vigorously endorsed since there appears to be major payoff potential in several areas of national need. These include:

- Nuclear Reactor Reliability
- Microelectronics
- Energy Source Development
- Acid Rain
- Nuclear Waste Management
- Materials Processing."

2.3.3 OTA Review of Magnetic Fusion Research—Overview

This overview is based on *Star Power: The U.S. and the International Quest for Fusion Energy* (OTA 1987).

"**Potential role of fusion.** If successfully developed, nuclear fusion could provide humanity with an effectively unlimited source of electricity that has environmental and safety advantages over other electric energy technologies. However, it is too early to determine whether these advantages, which could be significant, can be economically realized. Research aimed at developing fusion as an energy source has been vigorously pursued since the 1950s, and despite considerable progress in recent years, it appears that at least three decades of additional research and development will be required before a prototype commercial fusion reactor can be demonstrated.

"**The policy context.** The budget for fusion research increased more than tenfold in the 1970s, due largely to growing public concern about environmental protection and uncertainty in long-range energy supply. However, a much reduced sense of public urgency in the 1980s, coupled with the mounting Federal budget deficit, halted and then reversed the growth of the fusion budget. Today, the fusion program is being funded (in 1986 dollars) at about one-half of its peak level of a decade ago (see Figs. 1-1 and 1-2) . . ." [figures of OTA 1987].

"The change in the fusion program's status over the past 10 years has not resulted from poor technical performance or a more pessimistic evaluation of fusion's prospects. On the contrary, the program has made substantial progress. However, the disappearance of a perceived need for near-term commercialization has reduced the impetus to develop commercial fusion energy and has tightened pressure on fusion research budgets. Over the past decade, the fusion program has been unable to maintain a constant funding level, much less command the substantial funding increases required for next-generation facilities. In fact, due to funding constraints, the program has been unable to complete and operate some of its existing facilities.

"The Department of Energy (DOE) manages the U.S. fusion program, and its goal is to evaluate fusion's technological feasibility—to determine whether or not a fusion reactor can be designed and built—early in the twenty-first century. A positive evaluation would enable a decision to be made at that time to construct a prototype commercial reactor. However, this schedule cannot be met under existing U.S. fusion budgets. The DOE plan requires either that U.S. budgets be increased substantially or that the world fusion programs collaborate much more closely on fusion research.

"Choices made over the next several years can place the U.S. fusion program on one of four fundamentally different paths, which are discussed more thoroughly in Chapter 8 of OTA (1987).

1. With substantial funding increases, the fusion program could complete its currently mapped-out research effort domestically, permitting decisions to be made early in the next century concerning fusion's potential for commercialization.
2. At only moderate increases in U.S. funding levels, the same results as above might be attainable—although possibly somewhat delayed—if the United States can work with some or all of the world's other major fusion programs (Western Europe, Japan, and the Soviet Union) at an unprecedented level of collaboration.
3. Decreased funding levels or current funding levels in the absence of extensive collaboration would require modification of the program's overall goals. At these constrained funding levels, U.S. evaluation of fusion as an energy technology would be delayed.
4. If fusion research ceased in the United States, the possibility of domestically developing fusion as an energy technology would be foreclosed unless and until funding were restored. Work would probably continue abroad, although possibly at a reduced pace; later resumption of research in the United States would be possible but difficult.

"Some of the overall findings from OTA's analysis follow. Experiments now built or proposed should, over the next few years, resolve most of the major remaining scientific uncertainties regarding the fusion process. If those experiments do not uncover major unforeseen problems, it is likely—although by no means certain—that the engineering work necessary to build an electricity-producing fusion reactor can be completed successfully.

"Additional scientific understanding and technological development are required before fusion's potential can be assessed. It will require at least 20 years, under the best circumstances, to determine whether construction of a prototype commercial fusion reactor will be possible or desirable; additional time will be required to build, operate, and evaluate such a device.

"It is too early to determine whether fusion reactors, once developed, can be economically competitive with other energy technologies.

"Demonstration and commercialization of fusion power will require several decades after completion of the research program. Even under the most favorable circumstances, it does not appear likely that fusion will be able to satisfy a significant fraction of the nation's electricity demand before the middle of the twenty-first century.

"With appropriate design, fusion reactors could environmentally superior to other nuclear- and fossil-energy production technologies. Unlike fossil-fuel combustion, fusion reactors do not produce carbon dioxide gas, whose accumulation in the atmosphere could

affect the world climate. Unlike nuclear fission—the process used in existing nuclear power plants—fusion reactors should not produce high-level, long-lived radioactive wastes.

"One of the most attractive features of fusion is its essentially unlimited fuel supply. The only resources possibly constraining fusion's development might be the materials needed to build fusion reactors. At this stage of development, it is impossible to determine what materials will eventually be developed and selected for fusion reactor construction.

"If fusion technology is developed successfully, it should be possible to design fusion reactors with a higher degree of safety assurance than realized with fission reactors. It may be possible to design fusion reactors that are incapable of causing any immediate off-site fatalities in the event of malfunction, natural disaster, or operator error.

"Potential problems with other major sources of electricity—fossil fuels and nuclear fission—provide incentives to develop alternate energy technologies as well as to substantially improve the efficiency of energy use. Fusion is one of several technologies being explored.

"It is unlikely that major, irreversible energy shortages will occur early in the next century that could be ameliorated by the crash development of fusion power. There is little to be gained—and a great deal to be lost—by introducing fusion before its potential economic, environmental, and safety capabilities are attained. Even if difficulties with other energy technologies are encountered that call for the urgent development of an alternative source of energy supply, that alternative must be preferable before it can be accepted. It would be unwise to emphasize one fusion feature—economics or safety or environmental advantages—over the others before we know which aspect will be most important for fusion's eventual acceptance.

"Due to the high risk and the long time before any return can be expected, private industry has not invested appreciably in fusion research and cannot be expected to do so in the near future. But, unless the government decides to own and operate fusion generating stations, the responsibility for fusion research, development, and commercialization must be transferred to private industry. The nature and timing of this transition are highly controversial.

"Fusion research has provided a number of near-term benefits such as development of plasma physics, education of trained researchers, contribution of spin-off technologies, and support of the scientific stature of the United States. However, fusion's contributions to these areas do not imply that devoting the same resources to other fields of study would not produce equivalent benefits. Therefore, while near-term benefits do provide additional justification for conducting research, it is difficult to use them to justify one field of study over another.

"Fusion research has a long history of successful and mutually beneficial international cooperation. If this tradition can be extrapolated to an unprecedented level of collaboration, much of the remaining cost of developing fusion power can be shared among the world's major fusion programs.

"International collaboration cannot substitute for a strong domestic research program. If the domestic program is sacrificed to support international projects, the rationale for collaboration will be lost and the ability to conduct it successfully will be compromised.

"Agreeing to collaborate on fusion energy, both within the U.S. government and between the U.S. government and potential partners, will require sustained support at the highest levels of government. A variety of potential difficulties associated with large-scale collaborative projects will have to be resolved, and presidential support will be required. If these difficulties can be resolved, the benefits of successful collaboration are substantial."

2.3.4 References for Section 2.3

ANL (Argonne National Laboratory) 1987. *Technical Planning Activity,* prepared for the Department of Energy, Office of Fusion Energy, ANL/FPP-87-7, Argonne National Laboratory, Argonne, Ill.

DOE (U.S. Department of Energy) 1983. *Assessment of the Adequacy of U.S. Accelerator Technology for Department of Energy Missions,* DOE/ER-0176.

DOE (U.S. Department of Energy) 1985. *Magnetic Fusion Program Plan,* DOE/ER-0214, Office of Fusion Energy.

Holdren, J. 1986. *Preliminary Findings of the U.S. National Committee on Environmental, Safety, and Economic Aspects of Magnetic Fusion Energy,* IAEA Technical Committee Meeting on Fusion Reactor Safety, Culham, England, November 1986.

Jones, S. E. 1987. "Muon-Catalyzed Fusion: Where Do We Go From Here?" A special report for the Electric Power Research Institute; also *Sci. Am.* 257(1) 84-89 (1987).

Kahalas, S. n.d. Paper to be published in Proceedings of Conference on Heavy Ion Fusion, Darmstadt, FRG, July 1988.

NAS (National Academy of Sciences) 1986. *Review of the Department of Energy's Inertial Fusion Program,* National Academy Press.

NAS (National Academy of Sciences) 1987a. *Advanced Fusion Power: A Preliminary Assessment,* National Academy Press.

NAS (National Academy of Sciences) 1987b. *Outlook for the Fusion Hybrid and Tritium Breeding Fusion Reactors,* National Academy Press.

OTA (Office of Technical Assessment) 1987. *Starpower: The U.S. and the International Quest for Fusion Energy,* OTA-E-338, U.S. Government Printing Office.

Weinberg, A. M. 1985. "'Immortal' Energy Systems and Intergenerational Justice," *Energy Policy* 13(1) 51-59.

2.4 RENEWABLES *[by R. Van Hook (Leader), H. G. Arnold, F. C. Chen, A. Crane, T. R. Curlee, T. L. Donaldson, R. Ferraro (EPRI), R. A. Hawsey, S. G. Hildebrand, F. C. Kornegay, J. W. Ranney, A. F. Turhollow, Jr., and R. Wood]*

This section examines the renewable-energy technologies. Seven types of energy production are discussed: (1) hydroelectric generation, (2) biomass energy systems, (3) recovery of energy from municipal solid waste, (4) solar thermal systems, (5) photovoltaics, (6) wind energy systems, and (7) geothermal energy. The technologies have in common some degree of renewability or inexhaustibility, because all recover in useful form some part of an existing energy flow whose source is not diminished by the energy-related use. They also have many differences, some of which make direct comparisons difficult. One of the most significant differences is the form of energy produced. Geothermal, solar thermal, photovoltaic, wind, and hydroelectric systems capture heat, light, or motion to produce electricity, while biomass and municipal solid waste systems are based on fixed carbon, which can be converted to a variety of liquid or gaseous fuels. A second difference is related to the fact that the technologies exploit very different resources–the potential contribution to energy supplies must be calculated differently for each technology.

The resource bases for renewable-energy technology tend to be widely but thinly and irregularly distributed. The gross numbers can be huge, but estimates of availability or recoverability are much smaller and often depend on economic criteria. The economics of most technologies are extremely sensitive to efficiencies in collection, conversion, storage, and transmission–all factors that can be changed through research. Therefore, time scales and projections about the progress of research are critical in estimating the potential contribution of renewable energy technologies. Table 2.4-1 presents estimates of current use, gross resources base, and recoverable resources for most of the renewable technologies. The seven major parts of this section explain the assumptions behind these estimates for each technology and discuss factors such as the time frame to development, uncertainties in estimates, recent research experiences, and related developments that will affect the deployment of these technologies.

2.4.1 Hydroelectric Generation *(by S. G. Hildebrand)*

2.4.1.1 Current and projected resources

Hydroelectric generation currently contributes approximately 12% of the total U.S. energy supply. Approximately 1,300 sites, representing an installed capacity in excess of 69,000 MW(e), are presently in operation nationwide. These units generate in excess of 231 million kilowatt hours (kWh x 10^6) of electricity annually.

A number of surveys and data sources have been generated to estimate the available developed hydropower resource. Many surveys examine only potential energy without regard to other considerations. The data from the National Hydroelectric Power Resources Study (COE 1983) are screened to include recognized environmental constraints; economic considerations; and input from federal, state, and local agencies. These screens produce a more realistic estimate of the available hydropower resource. Starting with all 5,000 identified sites with hydropower potential, a set of reasonable potential sites is produced. The roughly 1,948 sites surviving the screens in the study represent approximately

46,000 MW of capacity. These sites include 1,407 existing dams with no currently operating generating capacity or with significant increased capacity available. Developing the hydropower resource at the remaining 541 sites would require the construction of dams or diversions. By including reasonable estimates of generating capability, developing all these sites could produce an additional 125 kWh x 10^6 of electricity annually. The potential hydropower resource is not uniformly distributed across the United States. Many of these sites have limited (<15-MW) capacity and have been developed for other purposes such as water storage, flood control, navigation, recreation, or irrigation. Because of the requirements of these competing uses, less than optimum development of the hydropower resource may occur at multiple-use dams. Such factors affect the economic viability of sites and lead to significant uncertainty in estimating the hydropower resource that might be developed on a regional or national scale.

Table 2.4-1. Current and potential energy production from the renewable energy technologies

Renewable technology	Current use	Gross resource	Recoverable resource
Hydroelectric, MW(e)	69,000	*a*	46,000[b]
Biomass, EJ	3	35[c]	13[c,d,e]
Municipal solid waste, EJ	0.2	3[d,f]	1.2[d,f]
Solar thermal	*a*	*a*	*a*
Photovoltaics, quads	*g*	*a*	0.4[h]
Wind, MW	660	*a*	*a*
Geothermal	2200 MW(e)[i]	703,800 quads	379 quads

[a]Not reported.
[b]Additional capacity.
[c]Includes municipal solid waste.
[d]Net after conversion to liquid fuel.
[e]15% additional as excess process steam, electricity, and chemical by-products.
[f]Estimated in Sect. 2.4.2, biomass technologies.
[g]Currently in use in remote locations, solid state electronics.
[h]Expressed as gas and/or oil displaced.
[i]Additional smaller amounts used in direct-heat applications.

Roughly one-half of the world's hydropower potential is located in developing countries. The World Bank (1980) estimated gross theoretical hydroelectric capacity distributed as follows: 533,089 MW in developed market economies; 615,160 MW in

centrally planned economies; and 1,194,390 MW of potential in developing countries. These estimates of potential are not directly comparable to those mentioned above, because different methods were used and different prices of oil were assumed. Developing countries are very interested in surveying their hydroelectric potential and in conducting feasibility studies to exploit the possibilities.

2.4.1.2 Constraints to hydropower development

A number of significant issues affect the development of hydropower resources. These issues include electrical demand and the appropriate generation mix for a utility or region, legal and institutional constraints, economic considerations of hydropower and alternatives, competition for the resource, and environmental concerns. Although these issues exist to some degree in all developments, the relative importance changes in different regions as well as with the level of construction required to develop the resource.

Planning for changes in demand for electricity, price of alternative methods of generating that electricity, and appropriate mixes of generating capacity affects hydropower development. Because the operation of hydropower facilities can be constrained by natural conditions or by other issues, some effects of overall electrical system flexibility and reliability may be noted. The operation of smaller units, even numerous smaller units within a single utility region, has no significant effect on the utility system, but larger projects can be greatly affected by system constraints.

The process of granting development permits at existing dams is confusing and time consuming because of legal and institutional barriers to hydropower development including conflicts over development rights, water rights, Native American claims, and competing applications on numerous sites. Reform of the regulatory system would allow faster development of the hydropower resource. For sites that require significant construction to develop the resource, concerns over the right of eminent domain for private gain, dam safety, and project liability impact nonfederal development. Water rights are extremely important throughout the western United States, and conflicts caused by hydropower developments require extensive litigation. Rights of Native Americans including water rights, fishing reserved by treaty, and reserved development affect hydropower projects throughout the western United States as well. In particular, the rights of Native Americans in the Pacific Northwest, an area rich in potential hydropower development, must be resolved before additional significant development can occur.

Economic constraints to hydropower development include the high initial capital cost of projects, the lengthy licensing period, uncertainty in regulations regarding purchasers of power, and inconsistent rate structure within regions. If purchase rates established by utility commissions are inadequate to offset development costs, private hydroelectric development will be greatly reduced. At all times, developers of hydropower projects are in competition for capital resources with other proposals.

Hydropower development can have adverse environmental impacts. Facility development and operation can affect water quality, fish passage, land use, wetlands, recreation, and aesthetics. Measures designed to minimize or mitigate these impacts may adversely affect the economics of any given project. However, a comprehensive evaluation must consider the impacts of hydropower development relative to the impacts associated with alternative forms of energy production.

Hydroelectric power development is a nonconsumptive use of the resource. However, the development may conflict with other uses of the water. Instream flow requirements and

water withdrawals may affect the operation of hydropower facilities. In addition, conflict over the land required for reservoirs may arise. In all cases, resolution of the conflicts must include allocation of water rights and the value of alternative uses of water and land.

2.4.1.3 Research that could make a difference

Research and development activities that can eliminate or reduce constraints to developing hydroelectric capacity are needed. However, contrary to the situation in many other technology areas, the research is not focused heavily on improving the technology itself. Rather, research to improve the regulatory process and research to effectively mitigate or minimize adverse environmental affects predominate our analysis. Some engineering innovations could be helpful, however. Hydropower plant components (e.g., turbines, veins, gates, and valves) must operate for long periods of time in severe operating conditions. Research is needed to determine the best materials for maximum plant component durability and minimum downtime. Minor increases in efficiency and service life would be beneficial. Innovative research in turbine design would provide some marginal increases in capacity. For example, studies have identified the free-flow-turbine and ultralow-head-turbine equipment as good candidates for R&D. Various assessments such as an unpublished DOE report, *Hydropower: A Technology at the Crossroads* (19 pp.), indicate that a potential of up to 12,500 MW exists for the free-flow turbine and that ~4,000 MW could be added with new ultralow-head equipment. Research on free-flow turbines could include tests to validate designs and identify engineering and economic aspects of large-scale deployment. Research on ultralow-head turbines could focus on redesigning a conventional unit including inexpensive materials and incorporating prefabrication and modularity.

The current regulatory climate for development of hydropower resources is confusing, burdensome, and duplicative. The Electric Consumers Protection Act of 1986 (ECPA) has provided a vehicle for environmental concerns to receive attention equal to that of power values in the regulatory process. States are using their regulatory authority under the Clean Water Act of 1977 (CWA) to add terms and conditions to hydropower licenses far beyond what was intended by the CWA. The Federal Energy Regulatory Commission (FERC), which licenses nonfederal hydroelectric facilities, must include such terms and conditions in their licenses but may not enforce them. The states have enforcement responsibility. FERC will enforce those terms and conditions that they determine to be relevant. It is difficult to define what type of research could address regulatory confusion. The problem becomes particularly intense over relicensing older hydroelectric facilities. Hundreds of licenses are due for renewal in the early 1990s. If the regulatory climate prevails to correct past mistakes in an environmental sense, development of the resource could be severely impacted.

Research that could make a difference in addressing the environmental constraints to hydroelectric production includes both development of methods for proper environmental analysis and development of mechanisms to minimize adverse environmental effects. Research is needed to develop and validate methods for the specification of instream flow requirements to protect fish and other aquatic life. Because existing methods are controversial and not universally applicable, field research is needed to test and evaluate new methods. This research should be focused on predictions of the response of fish populations and other trophic levels to changes in flow regimes, and field verification of methods developed is essential. Bypassing flows for fish protection have economic

consequences. Although the technology for moving adult migratory fish upstream around and over dams is sufficiently developed, technology for successfully bypassing dams by downstream migrants is less developed. Exhaustive reviews of the state of the art in fish bypass technology are available, but little research to improve this technology is in evidence. Regulatory agencies will require successful bypass of downstream migrants, and the effectiveness of the proposed bypass systems must be demonstrated. The development of new dams or diversions of migratory fish from streams could be obstructed if the environmental constraint problem is not successfully resolved.

The development of defensible methods to analyze the cumulative impacts of multiple-site development at the river basin level is needed. Environmental legislation mandates that environmental impacts of a given project be placed in the context of other development. Hydroelectric projects developed sequentially in a river basin certainly have high potential for interaction. This R&D should include engineering, environmental, institutional, and economic factors. Cumulative impacts have rarely been successfully quantified.

Our analysis has focused on conventional hydroelectric resources. Existing pump storage facilities face many of the environmental and institutional constraints described previously. The development of tidal power has been proposed, and some demonstration projects exist. R&D needs for tidal power development are beyond the scope of this study.

Research needs related to the development of hydroelectric potential in developing countries are not specifically addressed in this study. The lessons learned from hydroelectric development in the United States and elsewhere need to be transferred to efforts in developing countries. The United Nations Educational, Scientific and Cultural Organization (UNESCO) and other such international scientific advisory groups, the World Bank, and agencies similar to the U.S. Agency for International Development must play a role in guiding the environmentally safe and efficient development of hydroelectric potential in developing countries. Oak Ridge National Laboratory (ORNL) staff expertise in environmental impact assessment and natural resource planning could certainly contribute to enlightened development of this potential through participation in the aforementioned international organizations.

The Department of Energy (DOE) recently estimated that a modest investment in federal research and development to improve generating efficiency, to develop new equipment concepts, and to address environmental issues could stimulate the development of 40,000 MW of energy by the year 2001 that would not otherwise be developed. A several-million-dollar-a-year research effort is anticipated to be sufficient to stimulate this much development (see Table 2.4-2).

2.4.1.4 References for Section 2.4.1

COE (U.S. Army Corps of Engineers) 1983. *National Hydroelectric Power Resources Study,* "Executive Summary," Vol. 1, IWR 82-H-1, Institute for Water Resources, Fort Belvoir, Va., 32 pp.

World Bank 1980. *Energy in Developing Countries,* Washington D.C.

Table 2.4-2. Hydroelectric technology data

R&D need	Potential additional energy	Cost of R&D	Time required	Chance of success
Engineering innovation and environmental and safety issues	40,000 MW (by the year 2001)	$20 million	10 years	75%

2.4.2 Biomass Energy *(by J. W. Ranney, A. F. Turhollow, and T. L. Donaldson)*

2.4.2.1 Introduction

Biomass has the potential to displace 14.6 exajoules (EJ) (13.9 quads) of oil imports with liquid fuels. This volume approaches the quantity of imported oil in 1987, and biomass is the only domestic source of renewable energy capable of making such an impact at relatively low cost. Biomass can be converted to alcohols, gasoline, diesel fuels, and many other chemicals by using new biochemical and thermochemical conversion technologies. Currently marginally competitive and untapped, more than 3 EJ of biomass are used in the United States via electricity generation, process steam production, space heating, crop drying, and ethanol in gasoline blends (Haggin and Kreiger 1983). Biofuel is a significant option to develop in the United States—if not for future liquid fuel consumption, then as a viable and competitive option to keep the price of oil down.

The delivered cost of raw biomass has ranged between $10 and $35/dry Mg (megagram or metric ton), a price range believed to be currently competitive with prices of alternative fuels such as oil, gas, and coal. The price of bagasse in Hawaii, agricultural residues in the Great Plains, dedicated energy grasses in the Midwest, sawdust in the South and the Lake States, standing low-grade forest inventories in the South and New England, municipal solid waste in the Pacific Northwest, and firewood from the Appalachians are all within this range (Davenport 1987; Perlack and Geyer 1987; Gershman et al. 1983; USFS 1982; Office of Technology Assessment 1980a and 1980b; HNEI 1987). Corn for conversion to ethanol costs about $2/bushel (bu) in normal years of surplus production (DIS 1988). Vegetable oil from seed costs about the same as corn and can be used with minor modifications in diesel engines (Scheithauer and Dripchak 1988). However, the large quantities of biomass needed to produce 14.6 EJ (net) of liquid fuel will cause the cost of biomass to increase.

In the most generic sense, the technological challenges with biofuels are twofold. The first is to produce and deliver to each conversion facility about 1000 to 2000 dry Mg of biomass daily from within 80 km (48 miles) of the facility at a cost of between $1.50 and

$2.00/GJ (gigajoule = 0.95 million Btu), which is about $25 to $35/dry Mg. If an appropriate biomass inventory does not exist or cannot be developed at this scale, it makes no difference that the nation may have tens of exajoules of potential biomass—the option would not work. Exceptions in longer distance transport by barge or train can help broaden the land base from which to draw biomass. New biomass energy crops offer the opportunity to meet such demands within small transport distances when considered as part of a diversified biomass supply system (Ranney, Wright, and Layton 1987).

The second challenge is to produce 270 L (70 gal) or more of gasoline equivalents per dry megagram, twice current levels, at a total cumulative cost of about $0.26 to $0.32/L ($1.00 to $1.20/gal) using less energy and capital. The harvest, handling, and storage of biomass compose a third important technological challenge, which shows less propensity for improvement than the other two areas.

Moderate R&D advances will be required in each of the areas of challenge to make the whole biofuel system work at the scale needed. Advances in biofuel conversion technology alone will allow the approach to work in very restricted locations where large, inexpensive inventories of biomass are available. Perhaps 4 to 6 net exajoules of biofuels could be produced. Advances in biomass energy crops alone will permit some existing combustion and gasification technologies to expand perhaps by 3 or 4 EJ. In many ways, the presence of new energy crops will enable more complete use of rather dispersed existing biomass inventories. Advances in biomass production, biofuel conversion, and improvements in biomass handling techniques are necessary to achieve the large contribution of 14.6 net exajoules of liquid fuels potentially attainable from biomass.

Biomass is the only fuel source that has environmentally positive effects (Pimentel 1987), especially with respect to atmospheric carbon dioxide (CO_2) and the global warming issue; increasing vegetative cover of land for a variety of positive effects; and avoiding sulfur dioxide (SO_2), nitrogen oxides (NO_x), and fossil carbon emissions. Emissions from the conversion of biomass to biofuels involve mostly nonfossil CO_2, residues from upgraded or spent catalysts, phenolic compounds, ash, and organic acids (Klass 1987). Most of the biomass conversion wastes can be converted to by-products or recycled to fuel the conversion process, so cleanup costs are low. Environmental risks from accidental waste release in the conversion process appear to be low in comparison with coal. Methanol, which can be produced from biomass or coal, may soon be required in place of gasoline in Los Angeles and Denver to improve air quality.

Biomass other than wastes and residues cannot be produced everywhere, nor can it be grown at all favorable locations at the same cost (Ranney, Wright, and Layton 1987), because "basic primary productivity . . . is controlled by the local supply of raw materials, sun energy, and the ability of local communities as a whole (man included!) to utilize and regenerate materials for continuous reuse" (Odum 1959). The least expensive, most productive locations are where natural primary productivity is high (moist forests; moist grasslands; shallow lakes; moist agriculture; estuaries; alluvial plains; and limited areas of grasslands, mountain forests, and continental-shelf waters). Thus, desirable locations are limited to areas of the Pacific Northwest, eastern and southern estuaries, Southeast, Midwest, coastal Gulf of Mexico, Northeast, Subtropics, and parts of the California coast.

The poor transportability of biomass beyond 80 km other than by barge (hundreds of kilometers) or rail (~170 km) limits locations where biofuels can be economically produced and delivered. A single biomass conversion facility may require from 100,000 to 1,000,000 Mg/year—about the demand of a modern-day pulp and paper mill. Smaller facilities may be possible. A combination of existing biomass resources and the availability

of suitable land for new energy crops will play an extremely important role in determining the energy contribution of new biofuels. New crop technology must rely on faster growth (megagrams per hectare per year), greater tolerance to environmental stresses, better use and recycling of site resources, and better qualities for handling and conversion (Ranney and Cushman 1987).

Biomass conversion technologies offer relatively few locational limitations if enough biomass is available at reasonable cost. Major challenges involve improved process efficiency and product upgrading. Thermochemical processes offer considerable control over process variables with some loss of energy efficiency because they operate at higher temperatures and pressures (Schiefelbein, Stevens, and Gerber 1987). Conversely, biochemical processes are more susceptible to process fluctuations and the reactivity of biomass components (e.g., cellulose, hemicellulose, lignin, nonstructural carbohydrates) are potentially more energy efficient than the more physically extreme thermochemical processes. Developments in biomass production and conversion, although inherently linked, are presented separately.

2.4.2.2 Biomass production

Huge biomass resources and high potential in the development of new biomass energy crops are largely responsible for optimism in annual exajoule production estimates. Increased productivity is key to both providing competitive cost and meeting the huge demands biofuel conversion facilities will have for feedstocks. Advances have included the identification of fast-growing plants, breeding breakthroughs, new physiological knowledge of plant growth processes (a major basis for faster, effective genetic improvement), and capabilities to manipulate plants through biotechnology applications. For example, the capability exists to raise productivity 5 to 10 times over natural growth rates in trees (Cannell and Last 1976; Ranney, Wright, and Layton 1987) and microalgae (Johnson and Sprague 1987). Annual tree growth rates have already doubled and tripled, attaining 15 to 20 dry Mg/ha (max = 43 tons/ha) at a cost varying between $1.90 and $4.00/GJ (Ranney, Wright, and Layton 1987). The annual herbaceous energy crop productivity is 12 to 40 dry Mg/ha, which already matches or exceeds agricultural food crop productivity at a cost of between $3.00 to $4.00/GJ (Cushman, Turhollow, and Johnston 1987). And production of microalgae lipids for use as a diesel fuel has reached 20 to 30% (goal of 50 to 60%) by weight of the microalgae in a very short growing time in the laboratory at costs over $2.60/L ($10.00/gal) (Johnson and Sprague 1987). Lipid production from rapeseed is about 600 L/ha (63 gal/acre), while researchers are striving to attain 1340 L/ha (141 gal/acre) (Scheithauer and Dripchak 1988). Currently, rapeseed oil costs about $0.66/L ($2.50/gal) to produce, although costs could potentially decrease to $0.30/L ($1.15/gal) if research advances materialize. Edible oil production in the United States, dominated by soybeans, was equivalent to about 0.5 EJ (0.47×10^{15} Btu) in 1987 (USDA/ERS 1988). Table 2.4-3 provides cost and quantitative estimates associated with potential sources of energy biomass.

Current costs and productivity rates in Table 2.4-3 were derived from many publications and hundreds of biomass-energy-related experiments on a wide variety of sites in biomass-producing regions of the United States between 1978 and 1988 (see Sects. 2.4.2.5 and 2.4.2.7). Future biomass prices are calculated on the basis of likely technological improvements and should attain competitive status with oil, natural gas, and perhaps coal at 1987 prices. These prices are subject to change, depending on world energy markets. Net exajoule contributions were estimated for 2030 to 2050 from expected productivity rates; expected standing inventories; estimates of the availability of suitable land for a range of

Table 2.4-3. Potential costs, amount, and yields from various biofuel feedstocks

Feedstock	Cost ($/GJ)		Biomass/biofuel contributions[b]	
	Current	Goal	Raw biomass[a]	Fuel external energy cost ($)
Commercial forest wood	<2	<2	(6.0 - 1.5) × 50 = 2.3	0.2
Improved forest management		<2	(6.0 - 1.5) × 50 = 2.3	0.2
Logging residues	>3	<2	(3.8 - 3.0) × 50 = 0.4	t
Urban wood wastes and land clearing	2	2	(1.6 - 0.4) × 50 = 0.6	0.2
Forest manufacturing residues	1	<1	(2.4 - 0.3) × 50 = 1.1	t
Environmentally collectable agricultural residues	1-2	1	(2.2 - 0.2) × 60 = 1.2	0.1
Agriculture oil seed	0.38/L	0.30/L	(0.3 - t) × 95 = 0.3	t
Municipal solid waste & industrial food waste	2-3	<1.50	(2.6 - 0.2) × 50 = 1.2	0.1
Animal wastes	<4	3.50	(0.5 - t) × 60 = 0.3	t
25% wood industry changeover to energy	2	2	(0.6 - 0.1) × 50 = 0.2	t
Wood energy crops	3	2	(3.5 - 0.3) × 50 = 1.6	0.3
Herbaceous energy crops				
Lignocellulosics	4	2	(6.1 - 0.6) × 60 = 3.3	0.4
New energy oil seed	0.66/L	0.30/L	(0.4 - t) × 95 = 0.4	t
Aquatic energy crops				
Microalgae	2.60/L	0.30/L	(0.3 - t) × 95 = 0.3	0.1
Macroalgae	3.50	2	(1.5 - 0.4) × 65 = 0.7	0.1
Subtotal			(31.8 - 8.5) 16.2	1.7

Note: Net potential energy output primarily as liquid fuel = 14.5 EJ. Additional energy and by-product contributions are about 15% as excess process steam, electricity sold to grid, and chemical by-products.

[a](gross loss) × efficiency (%) = net ($).

[b]t = trace.

various crops under competitive conditions (no double counting of land resources); and biomass energy losses as a result of production, handling, and conversion broadly identified in Table 2.4-4. External energy inputs were also considered as a cost in the net exajoule production. Each biomass source has its own particular assumptions about markets and the interactive network among various energy and nonenergy crops (see Sect. 2.4.2.5).

An energy balance analysis of energy crop production, handling, and conversion (Table 2.4-4) reveals the basis for some of the values in Table 2.4-3. Such evaluations can be misleading no matter what assumptions are made. Table 2.4-4 can be used as only a very general indication of energy balances, even though considerable care was taken in its development. Net energy accounting in biofuel systems must respect biomass losses, energy inputs, and biomass wastes used as energy in evaluating energy balances. In connection with conversion of ethanol from wood (Blankenhorn et al. 1985) quantities are accounted on the basis of what production a hectare of land will support per year. Technological improvements made after sources were published have been used to adjust the figures slightly in Table 2.4-4. No special value other than energy content is attributed to various forms of energy.

The energy benefit/cost summary does not recognize all benefits (e.g., environmental improvement, use of inexpensive waste biomass) and costs (e.g., land, taxes, conversion facility capital), because their conversion to standard energy equivalents may be misleading. However, their absence must be recognized when suggesting that an 11:1 benefit cost ratio may be possible. Even with this deficiency in the analysis, the primary concerns still emerge: (1) productivity per hectare, (2) conversion efficiency, (3) by-product benefits and valuation, (4) the extent of biomass losses, and (5) energy inputs. Similar analyses conducted for herbaceous energy crops yielded very similar results (Vergara and Pimentel 1978; NEDO 1987). Perhaps even more important—regardless of the energy balance—the potential liters of ethanol from a hectare of land can be doubled under rather conservative estimates of efficiency improvements at each phase of the biomass production and conversion process.

Biomass production losses result from poor nutrient status, pest and disease losses, plant mortality, and environmental stresses that abnormally reduce growth. Estimates of these cumulative losses may be conservative. Fertilizer costs comprise 90% of costs. Land rent and taxes are not included, because equivalent energy or biomass costs require extreme assumptions. Blankenhorn et al. (1985) estimated that production costs would be three to four times more if land opportunity costs for corn biomass production are used. Their inclusion would reduce the future overall benefit/cost estimate to about 10:1. The challenge is to improve productivity under a wide array of site conditions while, at the same time, reducing biomass losses to pests, diseases, and environmental stresses.

Biomass handling losses result from unharvested residues, material dropped in any field movement, and respiration and decomposition before the conversion process. Passive field drying is assumed. It is imperative that biomass handling be as efficient as possible and that storage be minimized.

Conversion efficiency in ethanol production is assumed to improve from 345 L/Mg to 450 L/Mg. It is possible that production could be made higher, but no assumptions about conversion of lignin to a liquid fuel under efficient energy conditions were made. These figures represent a range of 40 to 60% conversion of raw biomass energy into liquid fuel energy. The remaining energy is used for fuel conversion, sold as electricity, and used to make by-products. Major future challenges are to use lignin more favorably and to find better ways of upgrading energy products and chemical by-products.

Table 2.4-4. Energy balance analysis of energy crop production

	Annual production (Mg/ha)		Annual handling (Mg/ha)		Annual conversion (Mg/ha)		Output[a] (liters ethanol)	
	Now	(Future)	Now	(Future)	Now	(Future)	Now	(Future)
Amount at start of phase	18.0	(22.0)	14.0	(20.0)	12.0	(18.0)	4200	(8100)
Biomass loss in phase	4.0	(2.0)	2.0	(2.0)	5.2	(8.8)	NA	NA
External energy input in biomass equivalents[b]	0.8	(0.5)	0.9	(0.8)	0.1	(0.1)	NA	NA
Internal energy recycled in biomass equivalents[c]	0.0	(0.0)	0.0	(0.0)	2.7	(3.0)	NA	NA
By-product contribution in biomass equivalents[d]	0.0	(0.0)	0.2	(0.2)	2.3	(2.5)	NA	NA

Total cumulative benefit cost
Net benefit/cost (present) = (6.8 + 0.2 + 2.3)/(0.8 + 0.9 + 0.1) = 9.3/1.8 = 5.2
Net benefit/cost (future) = (13.7 + 0.2 + 2.5)/(0.5 + 0.8 + 0.1) = 16.4/1.4 = 11.7

[a]NA = not applicable.

[b]Not included as external energy costs or biomass equivalents conversion efficiencies for electricity or energy in the manufacture of conversion facilities.

[c]Internal energy contributions occur as steam generated from the combustion of wastes and residues in the conversion process.

[d]External energy contributions occur in handling as a result of field residues that displace fertilizers and in conversion as excess steam generation from the combustion of process wastes.

Another way of looking at biomass systems for liquid-fuel production is to attribute an energy cost per megagram of biomass. Although this approach obscures the recognition of some biomass losses in terms of what a hectare of land is really producing, it shows the relative efficiency given a megagram of biomass (Table 2.4-5). Energy costs of biomass at various phases show the conversion phase to be very costly. This approach does not account for cumulative biomass losses or use of residues to fuel the conversion process. One megagram of biomass contains 15 to 18 GJ, depending on its type and condition.

According to the results of Table 2.4-5, the conversion process apparently requires much more energy per megagram than any other phase. Production costs, however, are inversely related to productivity. Where biomass is collected as a residue rather than grown as a specialized crop, production energy costs are even lower. Conversion costs appear to be very high because no credit is given to the use of wastes to generate the required energy.

Table 2.4-5. Biomass efficiency[a]

	Production (GJ/Mg)		Handling (GJ/Mg)		Conversion (GJ/Mg)[b]		Output (liters/Mg)	
	Now	(Future)	Now	(Future)	Now	(Future)	Now	(Future)
With land/ tax[c]	0.2	(0.1)	1.1	(0.75)	5.5	(4.2)	315	(410)
Without land/taxes	0.1	(0.03)	1.1	(0.75)	5.5	(4.2)	315	(410)

[a]Production estimates are based on those from hybrid poplar energy plantations and ethanol production. Assumptions are similar to those in Table 2.4-4.

[b]Involves primarily wastes to generate energy, part of which is steam and part electricity, with average efficiency of 50%.

[c]Land rent and taxes are expressed in the energy required to produce corn biomass.

Basically, research has concentrated on the development of two kinds of energy crops: (1) lignocellulosics, which as the name implies, are plants grown for their lignin-cellulose-hemicellulose but including nonstructural carbohydrates (aquatic plants, grasses, legumes, and wood); and (2) high lipid-producing microalgae and rapeseed oil. Lipids are good for making diesel fuel. Generally excluded are food-related crops that have been well developed under nonenergy programs. These crops would include starch, carbohydrate, and hydrocarbon plants.

Lignocellulosic energy crops can produce huge quantities of biomass, are improved for efficient energy conversion, and are sufficiently low in cost to keep the final fuel price competitive. In most biofuel-driven systems, the cost of the biomass feedstock is about one-half that of the entire process to a final product. Figure 2.4-1 describes the pathway of biomass from its beginning in actively gathering solar energy to its end product as a biofuel. This view concentrates on the challenges of biomass production rather than conversion. Major production challenges to improving productivity and efficiency are (1) maximizing solar radiation collection; (2) increasing growth allocation to the harvestable portions of the plant; (3) minimizing losses to respiration, stress tolerance, pests, and handling; and

(4) tailoring biomass qualities to conversion processes. These challenges apply to lipid-(oil-) producing plants as well as the lignocellulosic group.

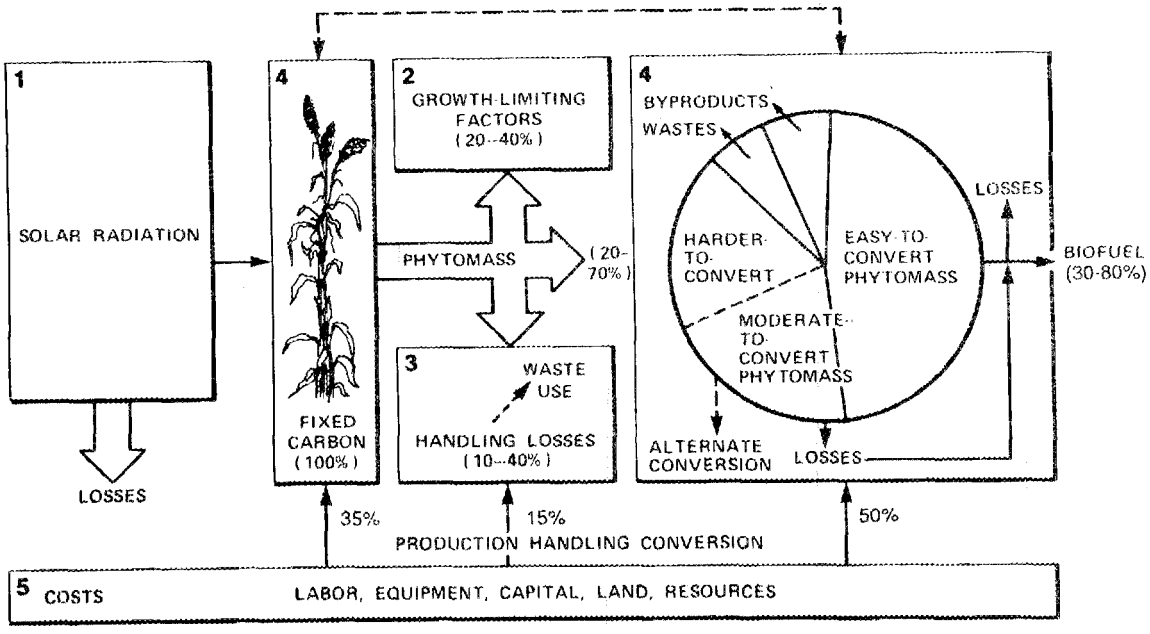

Fig. 2.4-1. Energy flow and cost categories in a biofuels pathway using (herbaceous and wood) energy crops (ORNL-DWG 87-1790R).

The capability must be improved for more growth of biomass energy crops across a wider range of environmental conditions and free of disease if biomass is to be a significant energy feedstock. Wider stress tolerance may require compromises in productivity, the origin of the major challenge in biomass production (Ranney, Wright, and Layton 1987). The challenge varies with major plant groupings. Aquatic plants must deal with water salinity and alkalinity, temperature variances, nutrient and silica limitations, and low light (Johnson and Sprague 1987). Terrestrial plants must tolerate drought, poor soil conditions, crowding, and late spring or early fall freezes. These growth and stress tolerance problems are particularly suited for tissue culture and gene engineering techniques in problem solving.

At this point, it appears that the manipulation of morphological and physiological characteristics can accomplish greater productivity improvements than can increasing the efficiency of photosynthesis. Various advanced breeding techniques and biotechnology applications are the vehicle by which productivity improvements can be accomplished but only after specific characteristics have been identified and evaluated for genetic or cultural control and priority of importance.

For energy crops, nine areas of research are now identified as priority efforts toward revealing crucial genetic traits for focused gene mapping and improvement that will contribute to faster growth (Hinckley et al. 1988).

The most significant challenges involve the identification and isolation of genes (genome mapping) controlling specific aspects of these processes, manipulating genes, and the field testing of newly created material. The alternative has been to rely on screening, breeding, hybridization, and selection, processes that rely on the infinite wisdom of nature's

selection process (wild genetic material) to develop new plants of high survivability but managed under slightly improved environmental conditions. Long- and short-term research depend on each other, and Table 2.4-6 describes how this dependency works in terms of short- and long-term priorities.

Table 2.4-6. Necessary relationship between short- and long-term priorities in supporting long-term biomass research

Major biomass research challenges of the future	Necessary near term	Important long term
Improving physiological definition	1	6
Improving root-soil-root symbiont improvement	6	2
Altering formation of plant metabolites[a]	7	4
Altering photosynthate allocation	5	3
Altering basic chemistry of respiration	8	5
Improving solar collection	4	1
Improving pest and disease resistance	2	8
Improving cultural efficiency (herbicide resistance, nutrient use mixing species)	3	7

[a]Number 2 priority for lipid farming algae.

Directing growth toward desired components of plants for better biofuel conversion or fuel production is the most long range and far reaching approach needed in energy crop improvement. "Short circuiting" algae to produce more lipids sooner under less costly stimulating conditions, causing trees to produce more (or different) cellulose and hemicellulose while producing less lignin (or vice versa, depending on the desired end product), altering aspects of respiration processes, and experimenting with metabolic pathways offer significant avenues for accumulating considerably more biomass. These are the kinds of approaches needed in addition to the more classical breeding and field experiments now in progress.

Studies in progress by the Institute of Paper Chemistry and others are identifying low to moderate heritability for biomass characteristics desired by biomass conversion technologists. These characteristics include cellulose crystallinity, hexose and pentose polymers in hemicellulose, lignin composition, mineral composition of ash content, and biomass uniformity. Some characteristics such as specific gravity and moisture content are genetically more controllable under conventional breeding technology.

The point is that there are many chemical qualities, as opposed to survivability and growth qualities, that may be more amenable to direct deoxyribonucleic acid (DNA) manipulation and bioengineering (gene transfer) in achieving significant changes than with the use of conventional techniques. Thus, if the high cost of biotechnology is disregarded, two important future concerns emerge. The first is specific aspects of basic bioengineering to engineer changes at the atom/ion level, DNA/molecule level, metabolic pathway, and physiological response levels depending on the divisions involved. Exemplified by the

developments in ion exchange in photosynthesis (personal communication from E. Greenbaum, Oak Ridge National Laboratory, 1987), the connection between biotechnology and energy is direct and highly sophisticated. For example, the link between computer technology and biotechnology (and perhaps robotics) is at the point at which many energy-supply and energy-conserving technological developments can be expected in the next 30 to 50 years. Chemometabolite regulation of nonorganic structures by organic components, for example, is in some ways an extension of existing solar-powered calculator technology. Understanding the formation and control of metabolites in photosynthesis is a central challenge to many of the futurist questions being posed.

The second and perhaps wide-open field is the assessment, policy development, and control of environmental and human risk associated with bioengineered organisms (OTA 1988) and the techno-organic constructs of the future. Confusion reigns. The Oak Ridge Associated Universities' Scarboro Facility's use as a test release point; the ORNL Environmental Sciences Division's expertise with ecological issues, environmental contaminants, and environmental policy; and the ORNL Biology and Chemical Technology divisions' expertise in DNA technology offer the richest developmental grounds in the United States for new organism-release evaluation and policy. Built-in "organism" controls such as sterility, self-destruct genes, and many other options are part of policy considerations.

More immediate challenges in biotechnology concern the rejuvenation of cells, the pushing back of differentiated cells to a more undifferentiated or totally undifferentiated state from which to multiply and grow entire clonal organisms (Mabry 1988). The process must be stabilized, but we do not yet have adequate knowledge to ensure this. Mutations occur; required laboratory conditions create morpho-physiological abnormalities; and the steps are laborious, time consuming, and expensive. Any of these points are potential laboratory research areas. However, as long as ORNL can direct its attention to central, basic issues such as cell rejuvenation, environmental risk, and metabolite formation and control—all of which require large and highly sophisticated team technology—the private sector and universities will probably direct their attention to more applied and near-term challenges.

For immediate applied challenges in energy crop R&D, the two most dominating topics are disease defenses and plant mechanisms for environmental stress avoidance or tolerance. The stress sources for terrestrial plants are drought, poor drainage, temperature extremes, poor soil nutrients and structure, and toxicity from chemicals/pH. Formulating breakthroughs in these areas is primarily a process of gaining knowledge about plant response mechanisms. It is a waste of energy and undesirable for a plant to expend energy defending itself against something that may or may not occur. So the process of turning on the proper defense mechanism at the right time and in sufficient strength and then turning off the mechanism when it is not needed is the challenge.

An area of tremendous potential is the identification, control, and improvement of soil and water microbes. Free-living nitrogen fixers, microbes that protect plant roots from diseases and other pests, microbes that facilitate nutrient uptake, and denitrifying soil organisms all can strongly affect biomass productivity. Soil microbiology has been an important but neglected field far too long.

2.4.2.3 Conversion

Approximately one-half the cost of producing fuels from biomass is expended on the conversion process; the other one-half is the feedstock production and collection. Therefore, improvements in conversion technologies can significantly reduce overall costs. Most conversion processes include three steps: (1) pretreatment in which the feedstock is prepared in a manner for the main conversion step; (2) principal physico-chemical conversion to the desired product; and (3) recovery and purification of the product to a usable and marketable form. In most cases, the final product form is specified by the market use (such as in internal combustion engines or industrial boilers). This situation is somewhat reversed from the historical development in which the equipment for final use was designed to use the product of the conversion process. Thus in a sense, biofuels is a retrofit process. However, relatively minor changes to boilers and engines often can be made to improve the performance with biofuels.

Conversion of biomass feedstocks into fuels can be accomplished by four principal technologies that result in four different fuel products: fermentation of carbohydrates to produce fuel extenders, thermal liquefaction to produce a biocrude for gasoline, recovery of oils from plant seeds and algal cells for diesel fuel, and gasification (biological or thermal) to produce gaseous fuels or gases for direct combustion and turbine drive. The status and research needs for these conversion technologies are summarized below.

Various alcohols (principally ethanol) can be produced from carbohydrates through the fermenting actions of microorganisms. Alcohols are effective fuel extenders and increase the octane rating. More than 8% of the gasoline used today is an alcohol blend, usually 10% ethanol. Carbohydrate feedstocks (cellulose and hemicellulose) from wood and herbaceous material are perceived to be better than corn and sugar crops because there is no competition with the human food use—there is more of it, and it is less expensive. The cellulose and hemicellulose fractions must be separated from the lignin prior to fermentation. Processes to accomplish this pretreatment step include steam explosion (more of a physical separation), acid hydrolysis, and enzymatic hydrolysis (the latter two being chemical separation). Costs for ethanol via steam explosion and acid hydrolysis pretreatment have been improved from about \$1.05/L (\$4/gal) to \$0.50/L (\$1.80/gal). The enzymatic process is conceptually the best but also the least developed. Effective means for recovery and reuse of the enzymes are essential. Fermentation of the sugars released by the pretreatment is relatively straightforward, particularly in the use of continuous fermentation processes and development of microbial populations with improved performance. Principal research needs include improved separation and fractionation of biomass into cellulose, hemicellulose, and lignin fractions. New and better uses for the lignin fraction are needed. Lignin is conceptually a feedstock for aromatic chemicals such as benzene, toluene, and xylene; however, known processes to obtain these materials from lignin are not economical. A variety of uses for the crude or refined lignin exist in principle but are poorly developed and demonstrated. And of course, increased use of the components of hemicellulose is necessary. Simultaneous processing and complete treatment of the various biomass components remain a challenge.

It should be mentioned that considerable research remains to be done on separation technology. It not only helps in reducing refinement costs but also provides a refined understanding of the processes of fermentation and all other areas of biofuel conversion by more accurately identifying the products of processing. Biomass and the products generated from its conversion are complex.

Thermal decomposition of wood in the absence of oxygen produces an oil or tar material that can be upgraded (in principle) to gasoline and other liquid fuels. This process has been demonstrated in pilot plants. Recent developments include catalytic, high-pressure reactors that convert 55 to 62% of the biomass to oil with a recovery of over 70% of the energy value of the biomass in the product oil. Catalytic upgrading of the oil to gasoline- and diesel-like material is under development. The oils are extremely heterogeneous and difficult to characterize chemically. Burn tests have shown promise that products can be developed that will be suitable fuels for boilers and perhaps for internal combustion engines.

A number of plants and microalgae produce 16-20 carbon long-chain hydrocarbons that are similar to long-chain petroleum hydrocarbons. These oils can comprise 20-50% of the weight of the plant seeds and can be recovered by physical pressure and chemical extraction. Although these oils resemble petroleum-derived diesel fuels in many ways, they are generally not directly suitable for use in diesel engines. Upgrading technologies are under development. In addition, efforts are under way to improve crop yields.

The two principal routes to gaseous fuels from biomass feedstocks are (1) anaerobic digestion to produce methane and carbon dioxide (biogas) and (2) partial oxidation to produce carbon monoxide and hydrogen (synthesis gas). Anaerobic digestion is especially suited to feedstocks that are already wet, such as agricultural wastes, high-strength industrial wastes from food processing operations, and energy crops such as water hyacinths. Anaerobic digestion of waste sludge from sewage treatment plants and selected industrial and agricultural wastes is commercial today. Digestion of municipal solid waste has been demonstrated at the large pilot scale, and researchers are working on digestion of woody wastes and energy crops. The methane content of the biogas is typically 50%. This content could be made much higher by better use of the liquid effluent. Costs for biogas have been improved from $7 to $8/GJ (1 GJ is roughly equivalent to 1 MBtu) to about $5/GJ. The DOE cost goal is $3.50/GJ. A principal research need and opportunity in anaerobic digestion is better understanding of the complex microbial consortia that carry out the biotransformations. Progress in this area will lead to better process performance in terms of rates and yields and especially better process control. There are also significant engineering needs for improved digester mixing and materials handling. In some cases, the biogas must be cleaned to remove corrosive sulfur compounds before it can be used as a fuel. Low- to medium-Btu gas may be produced by partial oxidation of biomass. The resulting carbon monoxide may be water-gas-shifted to generate a carbon monoxide and hydrogen synthesis gas. This gas is a versatile boiler fuel and may be further upgraded for other uses, including production of methanol fuel.

Thermal gasification has been demonstrated at the large pilot scale, often with cofunding from federal agencies for further verification of system reliability, optimization, and feedstock options. This technology for energy from biomass is a successful adaptation of coal-burning equipment. Further use of direct combustion of woody biomass is in competition with that of coal, oil, and natural gas; the choice is economic and is based on factors such as feedstock availability, price, and long-term contracts. In addition to materials handling, perhaps the largest issues of concern are air emissions and waste disposal (as with coal) but not quite so toxic.

2.4.2.4 Discussion and conclusion

Biomass as material for producing liquid fuel is reasonably capable of producing up to 14.6 net EJ (13.9 quads)/year and would be used if oil and coal prices increase slightly,

as they are expected to do. This large amount of energy, when expressed as gross biomass, amounts to 31.8 EJ. This volume is viewed as a reasonable ceiling using practically every form of biomass that can be collected into usable amounts at competitive cost.

The challenges in attaining this large capacity rest with biomass production, handling, and conversion rather than any single area. The extent of the challenges and the time demands to meet them are perhaps 50% with conversion, 35% with production, and 15% with handling. In the context of this allocation of challenges, the areas holding the greatest long-term promise are biochemical conversion, which principally involves simultaneous saccharification and fermentation (SSF); thermochemical production of methanol; near total use of the major biomass components (e.g., cellulose, hemicellulose, lignin, and nonstructural carbohydrates); genetic manipulation and testing of plant growth processes and biomass components; and the collection and densification of bulky biomass at low cost. All of these challenges are surmountable within the next 20 years at a research budget of about $50 million/year. The physical development of the biomass resources and biofuel conversion capacity at the scale presented would require at least two decades unless a massive crisis occurs. However, the groundwork for biomass resource development for energy is nearing its initiation based on direct combustion technologies and U.S. farm needs for alternative crops.

The pervasive power of economics will sort out the most desired biomass sources. In this evaluation, they appear to be in order of importance, desirability, and usage: (1) already collected wastes and residues, (2) commercial forest wood, (3) new terrestrial energy crops, (4) existing agricultural crops devoted to food and feed, and (5) new aquatic energy crops. A similar prioritization of biofuel conversion technologies is much more difficult. In general, however, thermochemical processes will be most immediately usable but will eventually be displaced by more energy-efficient biochemical processes in the production of liquid fuels.

Fuel from biomass is our only alternative for producing domestic renewable liquid fuel to replace imported oil. Amazingly, it is the most environmentally positive step toward decreasing total fossil carbon dioxide emissions by avoiding continued fossil carbon use rather than merely conserving it. Biomass can also generate many more domestic jobs per unit of energy (high multiplier effect) than any other form of energy.

Producing 31.8 gross quads of biomass is not without environmental concerns. Many tens of millions of hectares are involved. Some of this land would be native, low-quality forests; good agricultural land; pasture; certain estuarine areas; and currently nonused areas with aesthetic value. It is readily apparent that concerns will vary with the particular environment impacted. The development of new biomass crops is important in relieving the pressure on native habitats and environmentally sensitive areas while achieving the estimated results.

The conversion technologies also contain environmental concerns because of their uncertainty and possible magnitude. Most of the emissions and wastes from the conversion processes can be used to fuel the conversion process. Perhaps of greatest concern are spent catalysts, ash-derived minerals, spent weak acids used in hydrolysis, and unusable by-products such as organic acids or phenol-related compounds.

The energy efficiency of biofuels, although difficult to present accurately, is another area of concern that must be addressed. An 11:1 energy benefit/cost ratio for energy crops described in this report is not historically high. In this sense, we have been used to energy "hunting and gathering" where very high ratios predominate. For example, harvesting existing forests, coal, and crude oil for energy results in ratios reaching 25:1 to 50:1 or even higher. When we pay for renewability and costs to the environment, however, the 11:1 ratio does

not appear so low. Nonetheless, energy efficiency must be of major continued concern in biofuel R&D if it is to become competitive.

It became immensely apparent in the course of this study that many sectors of the national economy not only affect but are significantly affected by the viability of biomass energy and the developments it would generate. The agricultural, energy, heavy equipment, and transportation sectors would be most affected. Most changes would be positive in adding diversification, technology, and demand to these sectors. Of greatest concern is the reduction of foreign and domestic oil processing in favor of a growing domestic alcohol, biocrude oil, or liquid fuel from gas processing industry. The reaction and role of the existing strong oil industry will be crucial in sequestering or promoting the eventual development of a biofuels industry. Arco and Shell, for example, have been oil companies visibly interested and supportive in biofuel research. Some others, contrarily, advertise having no (biomass-derived) alcohol blended with their gasoline. Rising national concerns over global warming (greenhouse effect), energy security, and balance of payments (national debt) could potentially generate much more interest in biofuels in the near future.

2.4.2.5 Assumptions and justification for feedstock energy potential

Commercial forest wood

Estimates of timber inventories that could potentially be available on a renewable or sustainable basis were projected by a special wood energy task force of the Society of American Foresters (SAF). According to SAF, over 9 EJ could be provided in addition to other timber demands (Task Force on Wood Energy 1979). A similar but smaller estimate was made by the Office of Technology Assessment (OTA 1980b). Cost, accessibility, and distribution of markets will make a portion of the 9 EJ effectively unavailable. For our estimates, one-third of the inventory is considered unfeasible for various practical reasons, which leaves only 6 EJ. For comparison, the U.S. Department of Agriculture (USDA) Forest Service estimates that the United States has the equivalent of 460 EJ (28 billion dry Mg) of standing forest inventory. This comparison is important in providing a way of estimating the impact of energy harvesting (i.e., 6/460 or 1.3% of total volume of commercial forest land cut annually for energy).

Estimates of volume lost in the conventional harvest of forests varies from 15% for conifer monocultures to about 47% for unmanaged hardwoods. Forests harvested for energy involve more complete use and usually involve hardwood forests or mixed hardwood and conifer stands of moderately poor quality. Therefore, a 25% loss during harvest, handling, and minimal storage was assumed.

Improved forest management

Under almost any alternative, our forest resources will be subject to increasing management to improve productivity and prevent resource destruction. The potential productivity improvement is enormous, so estimates vary widely. The SAF Task Force on Energy estimated that 13 to 19 EJ/year (gross) could be made available by about the year 2050 with full stocking and intensive management. However, this gross estimate includes land clearing, urban wastes, urban tree removal, and noncommercial forest land but excludes conventional product demands. Eliminating these categories and allowing for what may be economically recoverable for energy at about $35/dry Mg delivered (1987 dollars), an

estimate of 6 EJ may be an optimistic number. The Energy Research Advisory Board (ERAB 1981) estimated closer to 4.5 EJ (4.25 quads), an amount not far from our estimate. It is unlikely that all U.S. commercial forests will be fully stocked or that productivity will be doubled on 50% of the commercial forest area, the Forest Service assumptions accompanying their larger estimate. Because much of this commercial forest land is in small private ownership, it is unlikely that the highest levels of production will be achieved. For comparison, 6 EJ/year is roughly the energy equivalent of what is being nationally harvested for all conventional forest products at the beginning of this decade (OTA 1980a, 1980b). The Office of Technology Assessment (OTA 1983) also estimated that roughly one-half of all wood harvested was eventually used for producing energy or heat.

Agricultural residues

Estimates from the agricultural sector indicate that between 1.7 and 7.1 EJ/year (gross) occur as agricultural residues (Lipinski et al. 1983). This figure varies from year to year, depending on weather and planted area. Included is straw, stubble, rice hulls, corn cobs, and a variety of residues dominated by corn, wheat, and soybean crops. The Office of Technology Assessment (OTA 1980a, 1980b) determined that much of this residue must remain in the field to prevent soil loss and to provide humus and nutrients. Therefore, it would be appropriate to assume that no more than 20% of all inventoried residues could be collected. Collectable residues would be restricted largely to parts of the Corn Belt and eastern Great Plains.

Regardless of the efficiency of agricultural crop harvesting, some losses will occur from handling and storage in the form of spillage, respiration, and decomposition. If residues are used immediately for energy, storage losses will be minimal and spillage and some respiration may account for 10% of the total field inventories. If herbaceous material is to be stored in a fresh state, as much as 30% of its energy content may be lost rather rapidly (nonstructural carbohydrate loss and decomposition) (Mosor 1980). Thus, immediate use of biomass at the time of harvest is assumed.

Herbaceous residues tend to be more reactive than wood in biochemical liquid-fuel production because of higher nonstructural carbohydrate content and lower lignin. Therefore, normally expected conversion efficiency rates of 50% for wood (see Table 2.4-5) would be estimated closer to 60% for herbaceous materials.

Forest manufacturing residues

The category includes forest product industrial wastes such as sawdust, pulping liquor, bark, and other remainders and residues from the manufacturing of forest products. Because these items tend to be precollected and relatively low in cost, they are the first to be used in energy production. This source of biomass is already competitive with other energy feedstocks, with the pulp and paper industry dominating this category. A minimum of 1.8 EJ/year is now used in this category. The Energy Research Advisory Board (ERAB 1981) estimates that mill residues should increase 33% by the year 2000. If this increase is extended to between 2030 and 2050, then more manufacturing, increased wood usage, and greater use of residues will negate one another, keeping the total at 2.4 EJ.

Wood and herbaceous energy crops

The estimate for biomass production from this category is based on two important assumptions: the size of the land base and the anticipated productivity rates achieved from this land base. The crop uses marginal to good agricultural land and small amounts of forested land. The land base must be shared with agricultural crops, grazing land, expanding forest land, urbanization, and herbaceous energy crops. Estimates of reserved or otherwise available and appropriate agricultural land total about 28 million ha just with set-aside or Conservation Reserve Program activity. Another 20 million ha could be converted from pasture, forest, and range that is more appropriate for herbaceous crops (discussed below). It is highly likely that 25% of any of this land (total of 56 million ha) would never be usable under any circumstances; 42 million ha is the available land base. In any new agricultural crop development, the best that can be hoped is that 30% of the seemingly available land base becomes converted to that crop. Although there is no citable reference, this 30% has proven to be a realistic rule of thumb. Therefore, a likely area available to energy crops is really about 12.6 million ha.

For the currently used agricultural land, the farming industry is interested in finding alternative crops, and energy crops are one option. Of the 162 million ha currently under agricultural production, probably not more than 10% of this land can be expected to be converted to energy crops. Of course, under crisis conditions, this percentage could drastically increase or decrease. The assumption is that by 2030 to 2050, one might expect 16.2 million ha to be converted from conventional agricultural crops to energy crops. The total of all suitable land (12.6 million ha of unused agricultural land and 16.2 million ha of used agricultural land) is 28.8 million ha (71 million acres).

The division of this area between herbaceous and wood energy crops depends on the suitability of the land for each crop and species, its quality as an energy feedstock, and the risks in growing and using these crops. For lack of detailed specific recommendations, the assumption is made that 60% of the area would be used for herbaceous energy crops and 40% for wood energy crops (11.5 million ha for wood energy crops).

By 2030 or earlier, a wood energy crop productivity rate of 20 Mg/ha annually (net harvested but not collected and transported) is expected on a wide basis in the U.S. Southeast, Midwest, and Pacific Northwest. Because some of the agricultural land is in the drier Great Plains area, the average annual productivity rate may actually be lower—about 17 Mg/ha (Ranney, Wright, and Layton 1987). This estimate results in a total production potential of 3.5 EJ/year of wood energy crops, with an assumed 17.9 GJ/dry Mg.

For herbaceous energy crops, an annual productivity rate of 22 Mg/ha (Cushman et al. 1987) on 17.3 million ha yields 6.1 EJ/year, with 16.0 GJ/dry Mg assumed.

New oil seed crops

The estimate for new oil seed crops in Table 2.4-3 is based on Scheithauer and Dripchak (1988) and is in addition to conventional crops producing vegetable oils. The estimate is based on winter cropping of rapeseed in the Southeast, which avoids the double-counting of land area.

Agricultural oil seed

The agricultural oil seed market, dominated by soybeans (20% oil by seed weight), produces about 0.5 EJ. Historically, about two-thirds of the value of soybeans is in the protein-rich meal, with the remaining one-third attributable to the oil. In the event of an emergency, it is unlikely that more than one-half of the edible oil (0.3 EJ) would go toward energy use even though the oil is almost totally usable as a fuel. This crop so predominately occupies markets and farmer interest [The United States provides 75% of the world soybean market (DIS 1988)] that soybeans probably represent a reasonably large quantity of all existing oil seed potential. Oil seed developed for oil production for energy would involve 40 to 60% oil content (as with rape seed), and soybeans with an oil content of >20% can be developed. New energy oil seed crops are discussed as a separate category.

Municipal solid waste and industrial food wastes

Municipal solid waste estimates vary greatly, mainly because of their collectibility and use at centralized locations. Estimates from various sources are from 1.5 to near 4 EJ. Food processing wastes account for a fraction of one exajoule. The 2.6-EJ level is used as the most common ground in peer-reviewed literature.

This source of biomass has the extremely positive benefit of reducing the amount of waste that must be disposed of. Tipping fees of $10, $15, and more per megagram make this an economically and environmentally attractive source of energy biomass.

Animal wastes

Inventories compiled by several sources indicate that probably 0.3 EJ, in raw animal wastes could feasibly be collected (Jewell et al. 1976; OTA 1980b). These wastes include primarily manures from livestock in collected crowded conditions (e.g., beef cattle, chickens, hogs, turkeys, dairy cattle). Estimates of increased manure production after the cited studies would keep the level at 0.3 EJ, with the lack of difference in levels being a result of rounding error. Potential increases to the year 2030 could raise the level to 0.44 EJ (Jones and Ogden 1984) but would require that considerably more from agricultural crop production be directed toward animal feed.

The 65% conversion factor is based on the gasification process because no information was available on manure conversion directly into liquid fuel.

25% wood industry changeover to energy

The pulp and paper industry may face a declining market because electronic mail and similar methods of communication and information exchange eliminate a large share of the paper market. The paper industry may attempt to diversify by using wood technology and processing in other areas. One area they may consider is energy. The industry in the United States now consumes about 2.4 EJ of wood, is near 75% energy self-sufficient, and produces about 1.2 EJ equivalent of paper products. If it were assumed that 25% of the industry redirected toward energy products (liquid fuels), the contribution would be about 1.2 EJ. This contribution conflicts with estimates (TFWE 1979; USFS 1982) of perhaps a 30% growth in the pulp and paper products market in the next 50 years.

Aquatic energy crops

Several assumptions that are relatively difficult to justify must be made concerning these crops. The productivity rate under operational conditions is extremely difficult to estimate, although it is high, and costs of production will remain a challenge in any significant development. Average daily gross productivity from very productive natural aquatic systems is about 5 to 18 gm/m^2 (Odum 1959), with best realistic outdoor expectations for managed systems at about 50 dry Mg/ha annually under intensive culture. The Office of Technology Assessment (OTA 1980a, 1980b) estimated a range of 20 to 120 Mg/ha annually with an energy potential of 1.1 EJ annually. The problems with estimating aquatic productivity are that (1) research results are sometimes from short favorable periods of growth and (2) estimates of suitable and available water area and intensity of management are quite variable; thus, the magnitude of necessary cost reductions make potential competitiveness difficult to estimate.

Current research on microalgae is concentrated in the semiarid U.S. Southwest, where limiting conditions of low winter temperatures and saline water were thought to be outweighed by high incident solar energy (not many cloudy days). Yet growing conditions (year-round temperatures, water availability, and topography) are more favorable in the Southeast along the Gulf Coastal Plain. Suitable water area, costs of production, and productivity rates (lipid production as an oil product) dominate estimates, and information is scanty in all areas. Oil production is probably on the 0.3 EJ order, while biomass production may be slightly higher, with a much less efficient conversion to liquid fuel.

Macroalgae (mainly kelp) appear to offer greater potential than microalgae, even though some premature ventures failed. Near offshore farms in the Gulf of Mexico, off the coast of southern California, and perhaps in some of the shallow productive water along the East Coast would be highly productive and require much less investment than microalgae systems. Included in this category are possible productive floating and emergent plants such as cattails, hyacinths, and spartina, the latter of which may exceed an annualized productivity rate of 85 Mg/ha during the best part of the growing season. With such a sizable water base, productivity potential may be 1.5 EJ for macroalgae and emergent plants. This yield is slightly higher than that reported by OTA and lower than unpublished estimates from the Solar Energy Research Institute. Reducing production costs below $5/GJ remains a significant challenge—one that is largely responsible for the energy estimates given.

2.4.2.6 Evaluation tables

Tables 2.4-7 and 2.4-8 show ratings and desirable characteristics of an energy system.

2.4.2.7 References for Section 2.4.2

Blankenhorn, P. R., et al. 1985. *Net Financial and Energy Analysis for Producing Populus Hybrid Under Four Management Strategies First Rotation,* ORNL/Sub/79-07928/1, Oak Ridge National Laboratory, Oak Ridge, Tenn.

Cannell, M. G. R., and Last, F. T., eds. 1976. *Tree Physiology and Yield Improvement,* Academic Press, London, 567 pp.

Cushman, J. H., Turhollow, A. F., and Johnston, J. W. 1987. *Herbaceous Energy Crops Program: Annual Progress Report for FY 1986,* ORNL/6369, Environmental Sciences Division Publication No. 2868, Oak Ridge National Laboratory, Oak Ridge, Tenn.

Table 2.4-7. Rating against scenarios

Example	Score[a]	Biomass/biofuels notes
Base case: Oil prices rise gradually, but intermediate-term fluctuations are possible	M	Must compete with coal and natural gas. Accepted but is a medium-cost technology
High oil prices: (1) Middle East or drastic OPEC[b] production curtailment or (2) demand rises rapidly and remains high despite high prices	H	Same but is a more war-favorable source of liquid fuel than coal environmentally; highly accepted
Emphasis on competitiveness: Effort to reduce electricity costs and raise productivity of energy use	M	Tropics with cheap labor can produce biomass more cheaply; conversion technology is competitive edge but needs domestic biomass supply
Nuclear shutdown	L	Coal better used for electricity production
CO_2 causes fossil rationing	H	Only remaining source for liquid transportation fuels and is non-carbon dioxide contributing
Low oil prices		Acceptable aid to environment and conservation
1. Concerted energy conservation policies by the United States and other nations (conservation/ environmental ethic)	M	
2. Large discoveries of oil and gas (e.g., abiogenic gas)	L	Not a low-cost technology

[a]Need for research and development: H = high in the context of the particular scenario, M = moderate, and L = low.

[b]OPEC = Organization of Petroleum Exporting Countries.

Table 2.4-8. Desirable characteristics of an energy system

Example	Score[a]	Biomass/biofuels notes
1. Environmentally acceptable	++	Desirable carbon dioxide capture, land impact, conversion chemical effluents
2. Inexpensive	+	Biomass almost competitive with coal except algal oil is costly; conversion costs in moderate range; capital costs are moderate (similar to coal)
3. Fair	++	Indigeneous, fits current agriculture system and resources; no losers; benefit to farmers; moderate risk; highly applicable to developing nations except those without flat land and water.
4. Accommodates other cultural needs	+	Fits all mechanized, unmechanized, agricultural, and hunter/gatherer cultures as long as land and water resources are present
5. Robust, resilient, and diversified	+	Based on many species and several alternative conversion technologies from simple to complex (oil, gas, electricity, heat)
Flexible	+	Production system can fit many niches; scales may vary; capital investment can vary for conversion
Secure	+	Generally decentralized but subject to weather, climate, burning, killing chemicals, transportation disruptions

Table 2.4-8. (continued)

Example	Score[a]	Biomass/biofuels notes
Geographic distribution	+	Temperature to tropical zones with good solar flux and some source of low-grade water and flat to gently rolling land
6. Enduring	++	Highly renewable but adherence to soil conservation measures and site capabilities important

[a]++ = Highly positive.
+ = Positive.

Davenport, E. L. 1987. *Pulpwood Prices in the Southeast, 1986,* U.S. Department of Agriculture, Forest Service Southeastern Forest Experiment Station, Research Note SE-348, 4 pp.

DIS (Doane Information Service) 1988. *Doane's Agricultural Report* 51(18-1), St. Louis, Mo., 4 pp.

ERAB (Energy Research Advisory Board) 1981. *Report on Biomass Energy,* Washington, D.C.

Gershman, Brickner, & Bratton, Inc., and Systems Architects Engineers, Inc. 1983. *Electrical Generation Using Solid Waste as Fuel in the Pacific Northwest,* report to the Bonneville Power Administration.

Haggin, J., and Kreiger, J. H. 1983. "Biomass Becoming More Important in U.S. Energy Mix," *Chem. Eng. News,* March 14, pages 28-30, Washington, D.C.

Hinckley, T. M., et al. 1988. "Physiological, Morphological, and Anatomical Components of Hybrid Vigor in *Populus,*" in *Proc. XIV Int. Bot. Cong.,* Berlin, FRG (in press).

HNEI (Hawaii Natural Energy Institute) 1987. *The Second Pacific Basin Biofuels Workshop,* Vols. I and II, University of Hawaii at Manoa, Honolulu.

Jewell, W. J., et al. 1976. *Bioconversion of Agricultural Wastes for Pollution Control and Energy Conservation,* Energy Research and Development Administration, TID-27164, Cornell University, Ithaca, N.Y.

Johnson, D. A., and Sprague, S. 1987. *FY 1987 Aquatic Species Program Annual Report,* SERI/SP-231-3206, Solar Energy Research Institute, Golden, Colo., 269 pp.

Jones, B., and Ogden, E. A. 1984. *Energy Potential from Livestock and Poultry Wastes,* Agricultural Economic Report No. 522, U.S. Government Printing Office.

Klass, D. L., ed. 1987. *Energy From Biomass and Wastes XI,* proceedings from the March 19-20, 1987, conference in Orlando, Fla., Institute of Gas Technology, Chicago, Ill.

Lipinski, E. S., et al. 1983. *Review of the Potential for Biomass Resources and Conversion Technology,* report by Battelle Columbus Laboratories to the Gas Research Institute (Charles A. Job) under contract No. 5083-511-0768, July.

Mabry, T. J., ed. 1988. *Plant Biotechnology: Research Bottlenecks for Commercialization and Beyond,* IC^2 Institute, Austin, Tex., 203 pp.

Moser, L. E. 1980. "Quality of Forage as Affected by Post-Harvest Storage and Processing." pp. 227-60 in Crop Quality, Storage, and Utilization, ed. C. S. Hoveland, Agronomy Society of America, Crop Science Society of America, Madison, Wis.

NEDO (New Energy Development Organization) 1987. *FY 1986 Annual Report—Alcohol and Biomass Energy Technology,* NEDO-OS-8705, Washington, D.C. 36 pp.

Odum, E. P. 1959. *Fundamentals of Ecology,* W. B. Saunders Company, Philadelphia, 546 pp.

OTA (U.S. Office of Technology Assessment) 1980a. *Energy from Biological Processes,* Vol. III, Appendixes, Part A: "Energy from Wood," U.S. Department of Commerce, National Technical Information Service, Springfield, Va., 321 pp.

OTA (U.S. Office of Technology Assessment) 1980b. *Energy from Biological Processes,* Vol. III, Appendixes, Part B: "Agriculture, Unconventional Crops, and Selected Biomass Wastes," U.S. Department of Commerce, National Technical Information Service, Springfield, Va. 318 pp.

OTA (U.S. Office of Technology Assessment) 1983. *Wood Use—U.S. Competitiveness and Technology,* OTA-ITE-210, U.S. Government Printing Office, 202 pp.

OTA (U.S. Office of Technology Assessment) 1988. "Ecological Considerations," in Chap. 5, *New Developments in Biotechnology, 3-Field-Testing Engineered Organisms, Genetic and Ecological Issues,* OTA-BA-350, U.S. Government Printing Office.

Perlack, R. D., and Geyer, W. A. 1987. "Wood Energy Plantation Economics in the Great Plains," *J. Energy Eng.* 113(3), 92-101.

Pimentel, D., and Krummel, J. 1987. "Biomass Energy and Soil Erosion," *Biomass* 14(1), 15-38.

Ranney, J. W., Wright, L. L., and Layton, P. A. 1987. "Hardwood Energy Crops: The Technology of Intensive Culture," *J. For.* 85(9), 17-28.

Scheithauer, R., and K. Dripchak. 1988. *Economics of Vegetable Oil Processing,* Oak Ridge National Laboratory, Oak Ridge, Tenn.

Schiefelbein, G. F., Stevens, D. J., and Gerber, M. A. 1987. *Biomass Thermochemical Conversion Program 1986 Annual Report,* PNL-6282/UC-61D, Battelle Pacific Northwest Laboratories, Richland, Washington, 41 pp. plus appendices.

TFWE (Task Force on Wood Energy) 1979. "Forest Biomass as an Energy Source, Study of a Task Force of the Society of American Foresters," *J. For.* 77(8).

USDA/ERS (U.S. Department of Agriculture, Economic Research Service) 1988. *Oil Crops: Situation and Outlook Yearbook,* OCS-18, U.S. Government Printing Office.

USFS (U.S. Forest Service) 1982. *An Analysis of the Timber Situation in the United States 1952-2030,* Forest Resource Report 23, U.S. Department of Agriculture, 499 pp.

Vergara, W., and Pimentel, D. 1978. "Fuels from Biomass—A Comparative Study of the Potential in Five Countries: the United States, Brazil, India, Sudan, and Sweden," in *Advances in Energy Systems and Technology,* Vol. I, ed. P. Auer, Academic Press, New York, 387 pp.

2.4.3 Solar Thermal Energy *(by Alan Crane)*

Solar thermal technology includes two major arrangements: (1) a multitude of reflectors focused on a central receiver and (2) individual units, each integrated with a receiver. Both have been demonstrated successfully and have similar cost projections. However, the latter (called distributed receiver systems) appears to have several advantages for further development. These technologies can be used to generate electricity or to provide high-quality heat (at virtually any temperature desired) for industrial use.

Considerable progress has been made in the technology over the past ten years. Several different state-of-the-art systems can be built that will produce electricity for about $0.12 to $0.15/kWh. The program goal is to reach $0.08/kWh through reduced costs and improved performance. Ultimately, it may be possible to reach $0.05/kWh, but a cost this low will call for some heroic advances that cannot now be detailed.

The major elements in a solar thermal system are the concentrator (mirrors or lenses), the controls and drives that keep the concentrator aligned with the sun, the receiver, and usually a fluid that is heated in the receiver and transfers the energy to a turbine or some other process, sometimes with some capacity for energy storage included. All these elements are the subjects of R&D to improve costs and performance.

The most dramatic advances for central receiver systems have been in heliostats (the concentrators) and in the fluids used. Early systems used glass/metal mirrors in the heliostats. Some research is continuing with glass/metal, but the greater promise seems to be with lighter materials. Of particular note are stressed membranes, consisting of aluminum or steel sheets fastened to both edges of a thin hoop, somewhat like a wide, flat drum. One face is coated with an efficient reflector. The space within the hoop between the two sheets is maintained at a slightly reduced pressure, which bends the reflector into just the right concave shape to focus the light on the receiver. Stressed membranes are about 20% the weight of glass/metal mirrors, which reduces the cost of the control system and foundation as well as of the heliostat itself.

In addition, early solar central receivers such as Solar I at Barstow used water/steam as the working fluid. Recently, molten nitrate salt has been tested successfully. Molten salt can be maintained at much lower pressures than steam (reducing costs of piping). The salt also acts as a heat storage medium with no need for heat exchangers or secondary systems. It appears practical to store at least several hours worth of full power. Even without storage, solar thermal power comes fairly close to load following on peak summer days with heavy air conditioning loads. Even a small storage capability would allow virtually complete load following because summer daily peaks usually occur in the late afternoon.

The receiver on a distributed system is similar to that of a central system. One of the most promising is the stretched membrane. As with the stressed membrane of the central receiver, it consists of a hoop with two membranes, one silvered to reflect, with the cavity at a slight vacuum. One difference is that the membrane could be a polymer sheet without any metal, further reducing weight. Other receivers under consideration include large metal mirrors, mirrors incorporating structural support, and fresnel lenses.

The distributed receiver can be designed to use the solar energy directly, for instance, in a turbine-generator, or to pipe the hot fluid to a central generating station. The most efficient system tested to date consists of a distributed receiver system with a Stirling engine at the focal point. About 30% of the insolation was converted to electricity in this system. The Stirling engine appears to be the most promising conversion technology for distributed solar units because it is efficient and compact. Stirlings have long been considered desirable

but have failed to live up to expectations. Recent years have seen considerable progress, but considerable development is still required. Efficiency, reliability, and low cost are the main objectives. A relatively recent concept is the free-piston Stirling engine, which has the potential for great reliability because of its mechanical simplicity.

The trough collector is a type of distributed receiver. The trough is a parabolic reflector focused on a line carrying the working fluid. Troughs require only one-axis tracking, instead of two, but the maximum available temperature will generally limit the output to industrial uses instead of power generation. In California, the largest solar installations in the world use troughs to generate electricity. However, gas-fired superheaters are necessary, and the plant economics would not have been viable without tax credits and "avoided-costs" payments set at very high levels. DOE plans no further R&D on the trough because it is a relatively simple, proven concept and because it shows less promise for future cost reductions.

Distributed units have been more successful so far than central receivers. They are easier to install because each unit is independent, and as many as desired can be added. Each central receiver must be designed for a specific number of heliostats. Reflectors in central units have to be individually focused on the tower and must follow a unique tracking pattern. However, at this point, it cannot be concluded that distributed systems will be superior in the long term.

It appears possible that solar thermal units will achieve the goal of $0.08/kWh, though it will not be easy. Cost reductions to date have been impressive, and a number of ideas such as the free-piston Stirling engine, liquid metal thermal electric converters, and thermochemical energy transport are under investigation. Even at $0.08/kWh, however, solar thermal electricity will not be very competitive with oil and gas unless the latter rise significantly in cost. As oil prices rise toward $30/bbl, solar thermal interest will increase.

Unfortunately, solar thermal lacks the natural market that photovoltaics enjoys. It cannot be left untended in remote sites, and it cannot be used in very small applications such as for garden lights or calculators. Thus, solar thermal cannot carve out a natural niche in the market place that would allow it to establish itself and gradually build up economies of scale. The only market for which solar thermal might be uniquely well qualified is toxic waste neutralization, where photochemical effects may be more effective than simple heat. Currently, research on this aspect appears quite limited.

Solar thermal is unlikely to ever be inexpensive by current standards, but it does have some advantages. As with other solar technologies, it is very clean and abundant. It is more efficient than photovoltaics, thus requiring less land area and support structures. Even more than photovoltaics, solar thermal has greater value than just fuel replacement and can be treated as available capacity because of the load-following characteristics on summer peaking systems and the likely availability of some storage.

No major breakthroughs are envisioned that would dramatically lower costs below current projections, but these projections may well be low enough to assure solar thermal a place in our energy system. Thus, a significant research program seems warranted.

Bibliography for Section 2.4.3

Richard B. Diver, ed., *Proc. Sol. Therm. Technol. Conf.*, SAND86-0536, Sandia National Laboratory, Albuquerque, N.M., 1986.

Solar Energy Research Institute, *Solar Thermal Power*, SERI/SP-273-3047, Golden, Colo., 1987.

U.S. Department of Energy, *National Solar Thermal Technology Program—Five-Year Research and Development Plan 1986-1990,* DOE/CE-0160, Office of Conservation and Renewable Energy, 1986.

U.S. Department of Energy, *Solar Thermal Technology Annual Report—Fiscal Year 1986,* DOE/CH10093-12, 1987.

U.S. Department of Energy, *Solar Thermal Technology—Fiscal Year 1987 Annual Operating Plan,* Office of Solar Heat Technologies, 1987.

2.4.4 Municipal Waste Disposal and Recycling *(by T. R. Curlee)*

The debate over municipal solid waste (MSW) is growing in intensity at the local, state, national, and international levels. Numerous municipalities are debating the options of landfill, incineration with and without heat recovery, mandated reduction in waste generation, and recycling. States such as New York, Rhode Island, Oregon, and New Jersey have recently passed legislation that mandates, for example, recycling, source separation, and waste reduction as methods to deal with municipal wastes. At the national level, the U.S. Congress is currently debating the reauthorizations of the Resource Conservation and Recovery Act of 1976 and the Clean Air Act of 1970 and Amendments of 1977. These pieces of legislation could have significant implications for our disposal and recycling options. At the international level, concern continues about carbon dioxide, acid rain, ozone-reducing agents, and other potentially damaging emissions from the incineration of waste (see, for example: EPA 1989; Curlee 1989).

At the center of the controversy is the search for the least costly means of dealing with our growing mounds of solid waste, given constraints imposed by existing technology and by the levels of pollutants that we as communities, states, nations, and the world are willing to accept. Land burial, the commonly used waste disposal method, is growing much more expensive in densely populated areas, and incineration is being attacked because of potential environmental problems (e.g., the cost of landfill in the northeastern portion of the United States increased by more than 50% between 1986 and 1987). Solutions to the problems posed by solid wastes require a concerted effort by various disciplines to address the technological options, the economic feasibility of those options, the environmental implications of those options, and the development of a consensus about the approaches that will be taken.

Several issues deserve special attention during the coming decade: (1) potential for reducing the quantities of solid waste; (2) collection possibilities; (3) waste separation feasibility; (4) recycling and disposal options and the economic and institutional feasibility of each option; (5) environmental effects of each option; and (6) a mechanism by which a consensus about solid waste can be formed, implemented, and enforced.

The reduction of waste is both a technological and a social matter. Technological questions arise when goods are designed and built with little or no concern for the disposal of those goods. For example, plastic packaging has come under attack, as well as the extensive use of plastics in automobiles and consumer goods. While technology can play a part in reducing the quantity and improving the quality of the solid waste stream, the most interesting and demanding questions to be posed in the coming decade with respect to waste generation will be social questions. Should the public sector encourage or require the reduction of waste? If so, which products and materials should be the focus of these actions? In this area, a host of questions arise that are appropriately addressed by social scientists and environmentalists. Various incentive mechanisms have been studied to reduce

the quantity of waste that requires disposal (e.g., taxes, return-for-deposit containers, and bans on the use of certain materials for certain uses). Social science research is needed to evaluate different policy options to reduce the generation of solid waste. Such policies must, however, recognize and attempt to balance the benefits and the costs of such actions. [Interest in this question is indicated by the formation of an office to address waste reduction issues within the Office of Solid Waste at the Environmental Protection Agency (EPA). Several bills currently before the Congress would require that EPA study these options (Snow 1988)].

Collection of waste also raises both technological and social questions. Collection is very important because the means of collection can facilitate source separation. Waste is much easier to recycle if it is collected in segregated streams. Once again, technological questions are raised about the design of goods and products. Product design can either facilitate or hinder collection of wastes. However, the question of collection is more of a social question than a technological question. A recent survey reported that in 1987, 82% of those polled expressed a willingness to separate recyclable materials. This percentage is up from 23% in 1986. Several states require or at least offer the collection of different waste materials (e.g., paper, metallics, compost, and plastics). Further, European countries and Japan have made great strides in the collection of separate waste streams. Whether the United States can follow those leads will depend on the incentive structures set up by the public sector and on general social trends. We must ask if the collection of segregated waste streams makes economic, institutional, and political sense. We must study the mechanisms that work most effectively, and we must not hesitate to learn from the experiences of the Europeans and Japanese (Hershkowitz and Salerni 1987). (The literature studied for this research indicates that Rhode Island currently has the most ambitious program to collect segregated wastes. New Jersey is also very active in this area).

Waste separation is one of the two most important technological solid waste issues. It has historically been the case that wastes of various types mixed together are technologically very difficult and not economically viable to separate. This difficulty particularly applies to plastics, paper, and compost materials. If an inexpensive and reliable waste separation system can be developed, many of our solid waste problems will be solved. The recyclables could be recycled; the nonpolluting wastes could be incinerated with heat recovery, although we may have some debate over what is and is not burnable; and the remaining wastes and ash could be directed to landfills. Recent waste separation advances in Europe and Japan need additional study. A recent report by the World Bank suggests that separation systems there are commercially viable. We should study how those technologies could be modified to suit our particular needs.

We must also recognize and attempt to understand the many alternative disposal and recycling alternatives. Recycling and disposal are not questions of yes and no; rather, they are questions of degree. There are numerous technologies to incinerate or landfill wastes. Further, there are numerous secondary, tertiary, and quaternary options for the recycling of solid wastes. (Secondary recycling refers to producing products with properties that are less demanding than those of the original goods. Tertiary recycling refers to processes such as pyrolysis or hydrolysis that retrieve fuels and basic chemicals from waste. Quaternary recycling refers to incineration with heat recovery.) Unfortunately, we as a nation are not making much effort to understand the intricacies of the different options. A knowledge base is needed at the national level to identify the technical options available to recycle and dispose of segregated and nonsegregated wastes. Further, more work is needed to identify the economic and institutional incentives and barriers that are relevant to each option.

Again, we should not hesitate to learn from and use the results of the work that has been done in Europe and Japan. It is increasingly acknowledged that the economic and institutional hurdles are just as difficult as the technological ones. We should also encourage impartial parties to conduct research. [All too often, major studies are provided by either industry or environmental groups. Occasionally, states become involved, as is the case with the state of New York's detailed study of the environmental effects of solid waste incineration. More is needed by the federal government to improve credibility and to realize economies of scale (Curlee 1986).]

In addition to waste separation, managing the environmental impacts of disposal and recycling is a crucial technological problem that must be addressed in the coming decade. Landfill disposal has been increasingly attacked for various reasons, and controlling the movement of harmful materials is of particular concern. Questions about landfill will, however, be overshadowed in future years by the decrease in the available landfill space. Landfill space in the densely populated areas of the U.S. Northeast will soon be exhausted, and in other parts of the country, landfill is becoming very expensive. (Some estimate that 50% of the currently available landfill space in the U.S. Northeast will be exhausted in 1991.) Dumping at sea has for the most part been ruled out because of environmental concerns, and incineration with and without heat recovery is not receiving great public support, again because of environmental concerns. Concerns about incineration include several specific environmental issues: the control of carbon dioxide, acid rain, metals, furans, and dioxins; and the disposal of toxic ash that results from incineration. Significant technical research is needed to identify the environmental impacts of the different options. Work is also needed to better understand the costs of specific environmental problems that are associated with disposal as well as recycling options (Visalli 1985).

Finally, work is needed to study mechanisms by which a consensus about solid waste can be formed, implemented, and enforced. The environmental, economic, technological, and institutional options available to municipalities, states, and the nation are numerous and complicated. Most of the work in this area is currently being done by industry, environmental groups, and (occasionally) state governments. At the minimum, there is a need for the federal government to provide coordination and better leadership in the study of solid waste disposal and recycling. As the problem of waste disposal grows, the resources of municipalities and states will not be adequate to address a need that is rapidly becoming more technically, environmentally, economically, and socially complicated.

References for Section 2.4.4

Curlee, T. R. 1989. *Source Reduction and Recycling as Municipal Waste Management Options: An Overview of Government Actions,* Draft Report for the U.S. Environmental Protection Agency, Oak Ridge National Laboratory, Oak Ridge, Tenn.

Curlee, T. R. 1986. *The Economic Feasibility of Recycling: A Case Study of Plastic Wastes,* Praeger, New York.

EPA (U.S. Environmental Protection Agency) 1989. *The Solid Waste Dilemma: An Agenda for Action,* EPA/530-SW-89-019.

Hershkowitz, A., and Salerni, G. 1987. *Garbage Management in Japan: Leading the Way,* Inform, New York.

Snow, D. 1988. "Plastics Packaging Under Attack," *Waste Age* 19(7), 131-40.

Visalli, J. R. 1985. "Environmental Impact Considerations in Recycling Solid Wastes," *J. Resour. Manage. Technol.* 14(4), 241-45.

2.4.5 Photovoltaic Technology *(by Richard Wood)*

2.4.5.1 Introduction

The direct conversion of solar energy into electricity by way of the photovoltaic effect remained primarily a laboratory curiosity until the requirements of the space program for a power system with high output-to-weight ratio focused attention on solar cell arrays. This attention helped stimulate the development of solar cell technology, but the emphasis was as much on increasing the radiation tolerance of the cells as on increasing their efficiencies. It was not until the establishment of OPEC and the subsequent manipulation of the oil market led to the "energy crisis" in the 1970s, that serious consideration was given to conservation and renewable energy sources as supplements to oil, gas, and nuclear energy. The establishment by DOE of the Solar Energy Research Institute (SERI) signaled the determination of the federal government to pursue the development of solar-related energy technologies, including photovoltaics, photothermal, wind, and ocean thermal. The massive research effort that was initiated at that time soon paid handsome dividends in spite of large funding cutbacks decreed by subsequent budgetary considerations.

Enormous progress has been made over the past five years in improving photovoltaic technology. Efficiencies of concentrating cells have reached 28%, and those of one-sun cells have exceeded 20%. There seems to be optimism that the goals set by DOE and the Electric Power Research Institute (EPRI) (of achieving systems that can produce electricity in the U.S. desert southwest for costs in the range $0.06 to $0.10/kWh) can be met. These costs are levelized, and a 30-year plant life is assumed. If R&D goals are achieved, under high oil price scenarios, it is reasonable to assume that photovoltaics could displace at least a modest percentage of oil and gas usage even within 10 to 15 years. A 10% displacement would mean about 0.4 quad of oil and/or gas for today's systems.

As a power source for the U.S. electric system, photovoltaic arrays can be used either as fuel savers on the grid or, with storage and some backup (e.g., using gas turbines), as stand-alone systems. The principal problem is, of course, the common mode failure caused by the rotation of the earth; all photovoltaic systems "go to sleep" at night. Even so, photovoltaics have many socially desirable characteristics. Environmental impact is very small, except perhaps for the relatively large commitments of land use and some emissions due to photovoltaic manufacture and the production and use of batteries or other storage devices. Photovoltaic systems are not likely to be confronted by social acceptance problems, and replacing current electric sources with photovoltaics is not likely to cause any social disruption. Clearly, success in photovoltaic technology could have significant implications and is a goal that needs to be vigorously pursued. In this section, the rapid evolution (during the past 5-10 years) of photovoltaic power systems is documented, and the likely developments in this area during the next 50 years are surveyed.

The section is organized as follows. In Sect. 2.4.5.2, the reader is reminded of the basic structure and functioning of a solar cell. A brief discussion of certain general principles underlying the attainment of high efficiencies is given; these principles hold regardless of the structure and material of any given type of cell. It is in the area of realizing these principles that so much progress in raising cell efficiencies has been made in recent years. In Sect. 2.4.5.3, the two main types of photovoltaic energy conversion (PVEC) systems (flat-plate and concentrator systems) are identified, and the basic ideas underlying their functioning are contrasted. In Sects. 2.4.5.4 and 2.4.5.5, respectively, the concentrator and flat-plate options are discussed in somewhat more detail and with attention

to currently attainable efficiencies. In Sect. 2.4.5.6, the systems showing the most promise for maturation during the next 50 years are contrasted, performance projections are given, and areas of research opportunities are discussed. In Sect. 2.4.5.7, sample economic analyses of two possible photovoltaic operating modes are given, and Sect. 2.4.5.8 summarizes photovoltaic technology.

2.4.5.2 High-efficiency solar cells

As mentioned above, certain general statements can be made about the efficiencies of solar cells that apply regardless of the particular materials involved and the nonconcentrator/concentrator option. It seems appropriate to discuss these briefly here to set the stage for the more detailed and specific considerations to be given later. Of course, cell efficiency is only one of a number of parameters that enter into determining the cost of a PVEC system. The cells must be assembled into modules and the modules into arrays, and extensive power conditioning equipment may be necessary, depending on the intended usage of the system. Nevertheless, many people in the field contend that cell efficiency is the single most important factor entering into a cost analysis that includes land usage, support structures, and maintenance. Thus, the question of cell efficiency is of utmost importance.

Figure 2.4-2 shows a very simple solar cell structure that illustrates the basic ingredients of any cell. The cell consists of a base region that is doped with an impurity to make it either negative- (*n*-) or positive- (*p*-)type material. For example, with P in Si, the electrical carriers that are introduced are electrons; and in *p*-type material (e.g., B in Si), they are holes. Whatever the conductivity type of the base region is chosen to be, the material must contain a region of opposite carrier type so that a *pn* junction is formed. In most solar cells, the *pn* junction is formed very near the front surface and has a planar configuration, as shown in Fig. 2.4-2. The function of the *pn* junction is to separate, via the built-in electric field, the charge carriers that are generated by the absorption of solar photons. The simple cell structure is completed by the application of front and back contacts. The front contact must be made in the form of a comb or fan pattern so that most of the incident photons are not blocked from reaching the surface of the cell; the back contact can cover the entire surface. Another type of structure incorporating a Schottky barrier instead of a *pn* junction is also sometimes employed, but it is very similar to the cell in Fig. 2.4-2 and will not be discussed further here.

In a solar cell, the absorption of a photon with energy above the semiconducting band gap results in the formation of an electron-hole pair.

In the *n*-type region, the "minority carriers" are holes; and in the *p*-type region, they are electrons. In the *pn* junction, between the two regions a field is formed that acts in different directions on electrons and holes. When a hole from the *n*-type region crosses the junction, it changes from a minority carrier to a majority carrier, as does an electron in going from the *p*- to *n*-type region. It is this separation of light-generated electron-hole pairs that gives rise to the flow of current through the external circuit.

Obviously, then, one of the major design considerations in a solar cell is to maximize the number of photons absorbed in the cell and minimize the recombination of electron-hole pairs before the individual carriers can diffuse to the *pn* junction and be separated. To maximize the photon absorption, it would be desirable to have no metal contacts whatsoever on the front surface to block out the solar radiation and a surface that is perfectly absorbing throughout that part of the solar spectrum that is above the band gap. Several

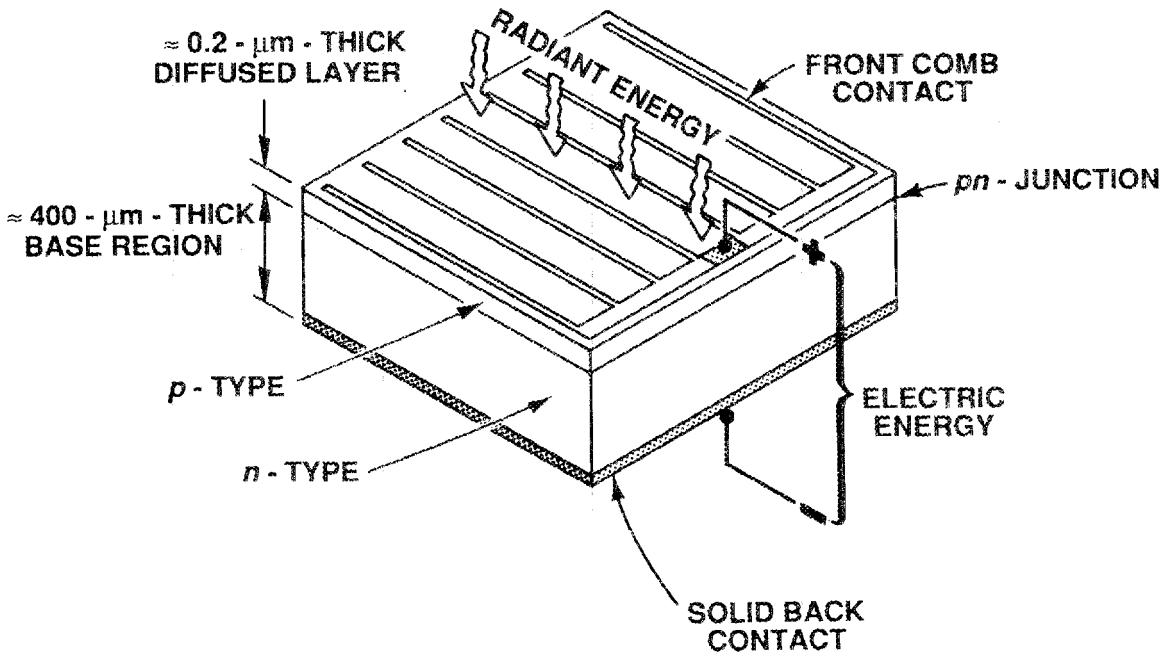

Fig. 2.4-2. Simple solar cell structure (ORNL-DWG 89-10917).

approaches have been introduced to achieve this goal. Surface treatments include the application of optimally designed antireflection (AR) coatings and the texturization of the surface on which the photons are incident. Texturization (by chemical etching) results in a roughened surface that, so to speak, gives reflected photons a second chance of being absorbed. As a consequence, a texturized surface in combination with an optimized AR coating can reduce the reflected solar radiation to essentially negligible values.

The effects of the metal contacts on photon "shadowing" can be reduced first by designing the contacts specifically for a given type of cell and then by burying the contacts or shaping them in such a way that the incoming photons do not "see" them. An even more drastic approach is to move the contacts to the backside, where they block none of the incident radiation. An approach of this type has led to very high efficiency cells of the interdigitated, back-contact, point-junction type, which will be discussed in more detail below.

The recombination of electron-hole pairs can be minimized by closing down all possible recombination channels in a cell. The single most important recombination channel, insofar as the current is concerned, is the impurities used to "dope" the basic semiconductor material to make it either *n*- or *p*-type. To reduce the dopant-induced recombination, the dopant concentration should be kept as low as possible, consistent with other requirements (of which space prevents discussion here). However, we do note that, whereas a reduced dopant concentration acts to increase the current, it causes a reduction in the voltage output.

The question of the voltage output leads to perhaps the most important area of high-efficiency solar cell design, and it is in this area that the greatest advances in solar cell

efficiencies have been achieved. In its simplest form, the open-circuit voltage V_{oc} of a solar cell is related to the short-circuit current I_{sc} by

$$V_{oc} = A_o(kT/q) \ln [I_{sc}/I_o + 1] \ .$$

The prefactors of the logarithmic function need not concern us here. The quantity I_o is called the dark current, and it arises because of recombination both in the junction region and at surfaces and interfaces (between the semiconductor and the metal contacts). Without a more rigorous discussion, it can be seen from the equation that for a given I_{sc}, V_{oc} increases (slowly) as I_o is decreased. The thrust of high-efficiency cell design and fabrication over recent years has been to reduce I_o to previously unheard of values by increasing the junction perfection and decreasing as far as possible all surface and interfacial recombination channels. For surfaces, this result is usually obtained by "passivating" the surface by the growth of an oxide layer. The oxide ties up the dangling bonds of the silicon atoms that would otherwise act as electron-hole recombination centers. Passivation of the interfacial region is accomplished primarily by keeping the direct contact between the semiconductor and the metallization to an absolute minimum, consistent with a low series resistance. Where the metal must contact the semiconductor, very heavy doping (to build in electric fields, which keep the minority characters away from the metal-semiconductor interface) has proved to be effective. Of course, with each of these steps, the simple structure in Fig. 2.4-2 becomes more complex and expensive.

2.4.5.3 Nonconcentrating and concentrating systems

The approaches to photovoltaic energy conversion fall quite naturally into two major classifications: (1) nonconcentrating, flat-plate collectors and (2) concentrator systems. A flat-plate system operates at one sun and puts a premium on low-cost, high-efficiency cells assembled into arrays that cover very large areas and may or may not incorporate some degree of sun tracking. Concentrator systems, on the other hand, require very high efficiency cells, which may be quite expensive to make, coupled with a type of inexpensive concentrator system designed to focus up to between 50 and 1000 suns on a single cell; tracking is essential. Within these two major classifications, vast arrays of materials, design considerations, fabrication techniques, and manufacturing processes present themselves. Space limitations will allow only a few of the available options to be considered here. These few were chosen to illustrate the salient features of systems likely to be developed during the next 50 years.

A brief discussion of the merits and drawbacks of the flat-plate and concentrator systems may prove useful to the reader. Flat-plate collectors have two major advantageous features, namely, they can operate in diffuse sunlight, and solar tracking is not an essential requirement. The disadvantages are that large areas must be covered by relatively sophisticated electronic devices (the solar cells) that must be fabricated in vast quantities at very low costs. Because of the large number of cells, there must also be a large number of electrical interconnects and provisions for encapsulating the cells to protect them from various hostile elements in their operating environments. Concentrator systems use the principle that both Si and GaAs solar cells actually become more efficient as the solar intensity is concentrated up to several hundred suns. They have the major disadvantage that only direct sunlight can be focused to any significant degree so that the concentrators must

always "follow the sun," which requires fairly complex two-axis tracking systems. Cloud cover renders a concentrating system virtually inoperable. Also, the reflectors or concentrators have inherent optical losses that partially offset the increase in cell efficiency. At very high concentrations, active cooling (e.g., circulating fluids) becomes necessary to maintain cell efficiency.

2.4.5.4 The concentrator option

In this section, the technology underlying photovoltaic concentrating systems is discussed, and in Sect. 2.4.5.5, the technology of flat-plate nonconcentrating systems is discussed. The reasons for this somewhat inverted order are that (1) the concentrator approach involves relatively fewer materials possibilities, at least in the near term, and (2) recent advances in solar cell efficiencies have been particularly noteworthy in cells designed for use in concentrator systems. We remind the reader that, in such a system, a large fraction of the array cost can be expended on the fabrication of the most sophisticated type cells provided the cost of the concentrators themselves can be kept to a correspondingly low figure. As a consequence, all of the recent conceptual advances in cell design discussed in Sect. 2.4.5.2 can be built into the cells if the necessary fabrication techniques are available.

Materials

Only two semiconducting materials are being seriously considered for near-term applications of concentrator systems: silicon (Si) and gallium arsenide (GaAs). On a longer time scale other materials may emerge, but experience with Si and GaAs suggests that such materials will have to undergo prolonged evolutionary periods to realize their full potential. Materials growth, purification, doping, etc., can require very disheartening learning curves.

The band gap of Si at 1.1 eV is not quite as well matched to the solar spectrum as is the GaAs gap at 1.4 eV. Consequently, the efficiencies of GaAs cells should be inherently a few (3 to 4) percentage points higher than the efficiencies of Si cells. However, Si technology is far more advanced than that of GaAs and, to date, large-area GaAs cells have not attained efficiencies quite so high as their Si counterparts. It is interesting to note, however, that even Si has not yet reached the full materials capabilities that many scientists believe are possible. For concentrator applications, GaAs also has an advantage in that cell performance does not degrade with temperature as rapidly as it does for Si. This advantage is not a particularly significant consideration for concentrations of ≈100 suns but becomes so at 500 to 1000 suns where active cooling via fluid circulation can become necessary.

Another noteworthy difference between Si and GaAs is that the former is an indirect band-gap semiconductor, whereas the latter has a direct band gap. Because the absorption coefficient of direct band-gap materials is very high, a few microns of GaAs is enough to absorb all of the solar radiation. In contrast, a few hundred microns of Si is required for complete absorption of the long-wavelength solar photons. In cell design, this drawback of Si can be partially overcome by optical reflectors on the backside and by texturization.

Although only very thin films of GaAs are needed, growing such films in the quantity and with the quality needed for large-scale, high-efficiency cells has not yet proved feasible. This is an active area of research, and there is optimism that many of the problems associated with thin-film GaAs cells will eventually be overcome.

Cell structures

At this point, it is probably best to discuss two specific types of cell configurations to illustrate how the general ideas of Sect. 2.4.5.2 can be realized in practice. To be even more specific, the discussion is restricted to single-crystal silicon (c-Si), where progress has been the most rapid. The first type of cell is of fairly conventional structure, with a contact on the front and one on the back. For simplicity, this type of cell will be referred to as bifacial cell. The other type of cell incorporates an innovative structure designed to use virtually all of the recent advances in cell theory and modeling. It has both the *pn* junctions and the positive and negative contacts on the backside of the cell; hence it will be referred to as a back-surface cell.

Structure and performance of bifacial cells

A schematic diagram of an advanced bifacial cell is shown in Fig. 2.4-3. The following features should be noted. The front surface of the cell is texturized (via the microgrooves) to increase the light-trapping capability; in addition, it has an AR coating. Less than 1% of the radiation in the solar spectrum is reflected from that part of the cell not "shadowed" by the front contacts. The cell surface is passivated by the high-temperature growth of an oxide layer ≈ 100 Å thick.

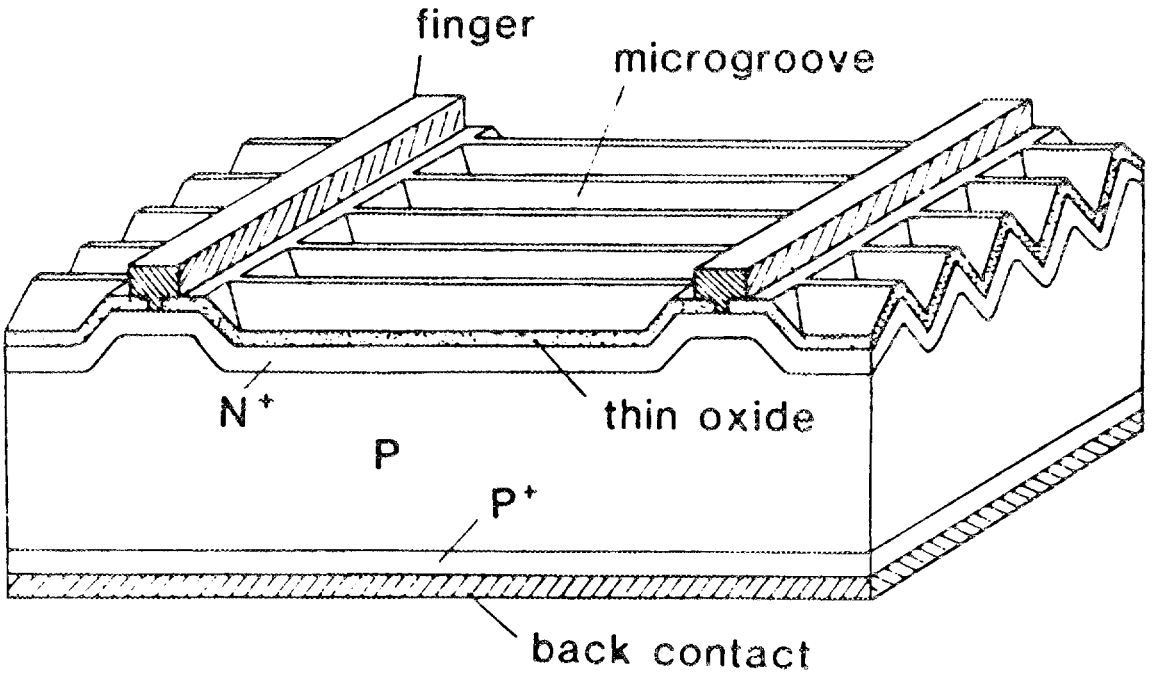

Fig. 2.4-3. Schematic diagram of a microgrooved passivated emitter solar cell (PESC). The cell source layer antireflection coating is not shown (not to scale). *Source:* Reprinted with permission from A. W. Blakers and M. A. Green, "20% Efficiency Silicon Solar Cells," *Appl. Phys. Lett.* 48(3), 215 (1986).

An ≈5-μm-wide channel down the center of each finger limits the direct contact of the metal with the silicon. The front contact metallization pattern is carefully matched to

the doping level of the emitter region and the intended use of the cell. For one-sun applications, the resistivity of the base region is usually chosen to be 0.2 to 0.3 Ω-cm, which implies a high doping level in this region. As a consequence, the minority carrier lifetime in the bulk is too short to make back-surface fields effective unless the cells are made very thin. The highest one-sun efficiencies reported to date for a large-area cell of this type are in the 20% AM (air mass) 1.5 range. Small-area cells of the same structure have achieved ≈25% efficiencies at ≈100 suns.

Further improvements can be made in this type of cell; for example, burying the contacts or using other techniques to reduce the shadowing by the front-surface metallization, more complete passivation, and thinner cells that incorporate both photon reflectors and carrier reflectors (electric fields) at the back surface. Realistic estimates for the maximum efficiencies obtainable with this type of cell using currently available silicon are 22% for one sun and 27% for ≈100 suns. There is optimism by some that improvements in Si growth technology and low-temperature processing may be able to raise these numbers by 3 to 4 percentage points. Of course, the efficiency improvements that have been achieved with these cell structures involve ever-increasing complexity and cost.

Structure and performance of back-surface cells

A schematic diagram of a back-surface cell is shown in Fig. 2.4-4. As with the bifacial cell, the front surface (shown down on the figure) is texturized for light trapping, is passivated by the growth of oxide layer, and has an AR coating. With this cell, however, the *pn* junctions are formed by very small islands of diffused dopant on the back surface. Positive and negative contacts are formed by interdigitated comb patterns, with a 50-μm repeat distance. The doping level of the base material is low (≤20 Ω-cm), so the minority carrier lifetime is long. The metallization contacts the bare silicon at only a part of the small areas of the *pn* junctions. The back surface is also passivated by an oxide layer. As a consequence of this configuration, the short-circuit current is very high and the open-circuit voltage is excellent for such a high-resistivity base material.

Efficiencies as high as 28% AM 1.5 under ≈100-sun illumination have been reported for this cell and, at this writing, it is considered by many to be the best type of cell for concentrator applications. However, the cell has shown degradation of 2 to 3 percentage points in efficiency under prolonged concentrated irradiation. Whether or not this problem can be overcome and whether it is common to all concentrator cells is not clear at this time. Also, it is not obvious that the back-surface cell structure can be used for multijunction devices.

Concentrators

The role of the concentrator, of course, is to focus the solar radiation onto the cell, clearly a very important element of a PVEC system that employs any degree of concentration. There are many types of concentrators ranging from simple Fresnel lenses to complex multiple-reflection designs and even very large heliostats of the type usually associated with "power tower" applications of photothermal conversion. Two basic requirements of a satisfactory concentrator are that optical losses be kept to a minimum and that the focused radiation be maintained on the cell at all times, including periods of thermal cycling, wind stress, and tracking. This latter requirement is not necessarily trivial, because the total area of a concentrator cell may be quite small.

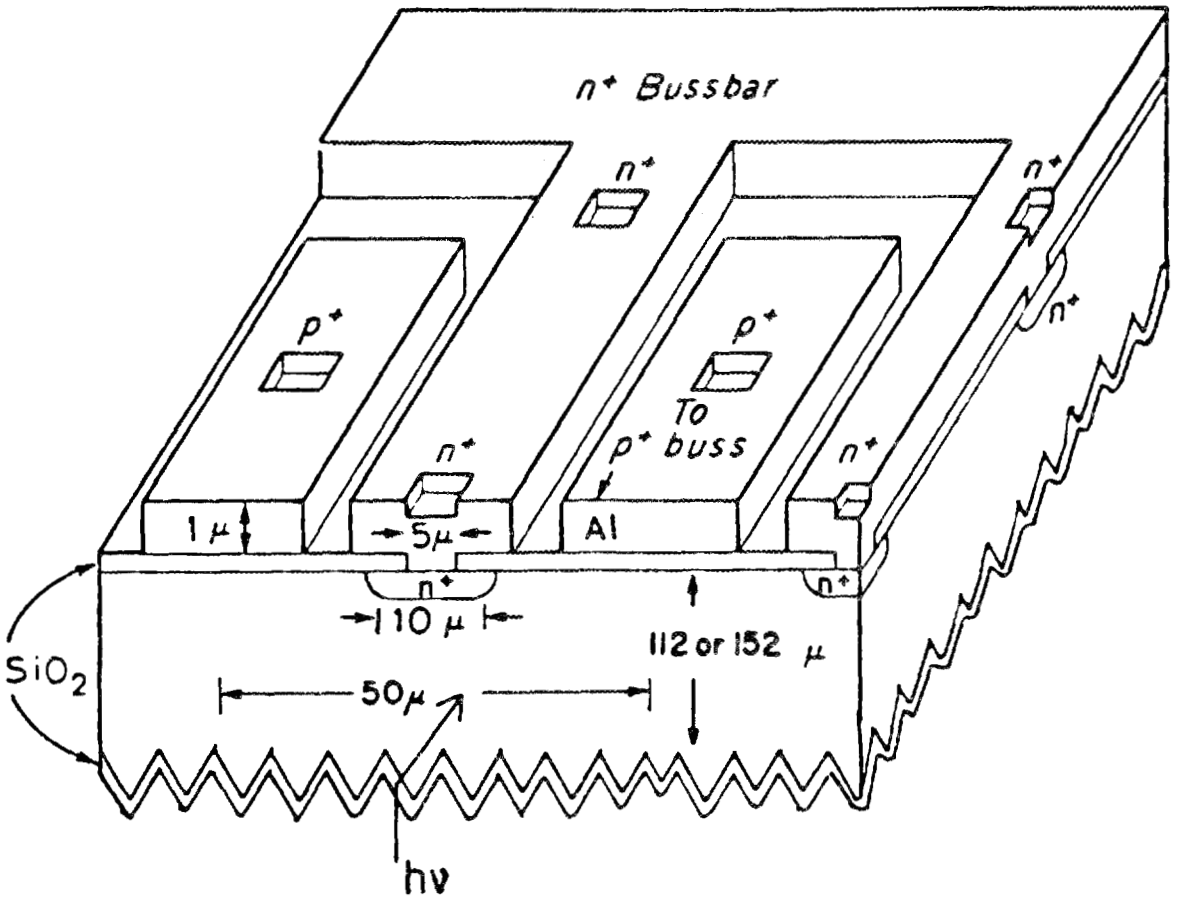

Fig. 2.4-4. A cross section of a region in the solar cell near one of the Al bussbars (copyright 1986 IEEE). *Source:* Reprinted with permission from R. A. Sinton et al., "27.5 Percent Silicon Concentrator Solar Cells," *IEEE Electron Devices Lett.* 7(10), 568 (1986).

Obviously, the expense of the concentrators is an important issue because the most basic underlying principle of a concentrator system is that relatively inexpensive concentrators can more than offset the cost of high-efficiency solar cells and the need for solar tracking. It is of great credit to the U.S. PVEC program that R&D efforts, directed and funded through Sandia National Laboratory, are addressing problems associated with every component of an integrated concentrator system. Interesting examples include work on (1) new ways of making Fresnel lenses that ensure tight focus while using inexpensive, light-weight materials; (2) reflectors that achieve light weight by eliminating aluminum in favor of thin metallized plastic membranes stretched over plastic frameworks; and (3) passive solar tracking that uses thermally controlled transfer of fluid to turn the concentrator/cell unit to follow the sun.

2.4.5.5 Flat-plate systems

Types of cells

The variety of approaches to flat-plate, one-sun photovoltaic systems is too great for detailed coverage here, so the discussion is limited to brief remarks about the types of cells shown in Fig. 2.4-5.

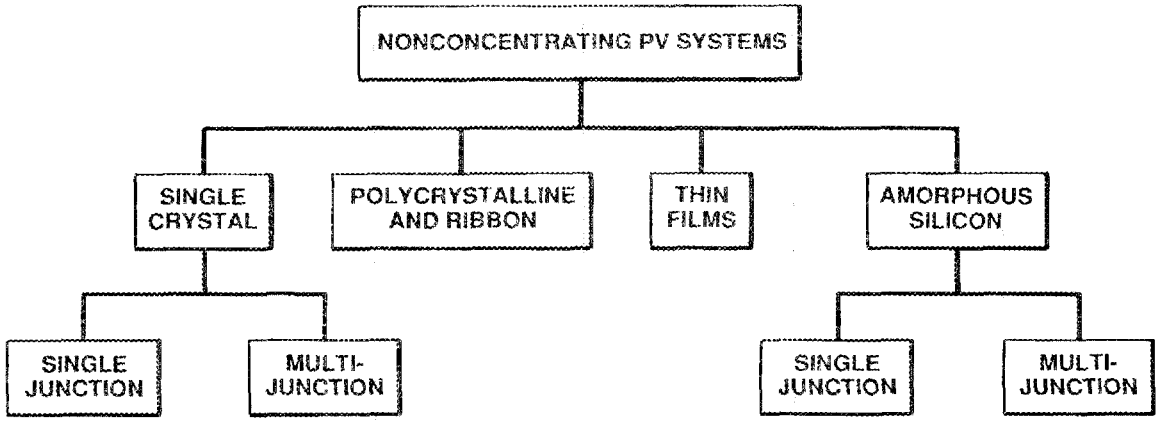

Fig. 2.4-5. Flat-plate systems cell types (ORNL-DWG 89-10916).

Single crystal

The structures of the cells used in these systems are quite similar to those used in the concentrator systems discussed in Sect. 2.4.5.4, although the specific design parameters may be quite different. The main consideration is the need to keep cell cost to a minimum so that large areas can be covered at an acceptable cost. For this reason, it is unlikely that cell design and fabrication can be as complex as in the concentrator systems. For example, multijunction cells made from single-crystal material may always remain prohibitively expensive for one-sun applications. Also, it is not clear at this time that the point-junction back-surface cell would be practical in flat-plate systems, because of the complex microelectronics techniques used in its fabrication. Obviously, a premium is put on automated, high-yield processing for one-sun cells, and ways to achieve this may prove to be a more fruitful R&D area than the cell design itself. Because of its expense, it is unlikely that single-crystal GaAs will be used extensively in flat-plate systems unless techniques for thin-film growth can be developed (see below).

Polycrystalline and ribbon silicon

The purpose here is to avoid the cost of growing and slicing single-crystal ingots. The main difficulty with polycrystalline material is the deleterious effects of grain boundaries. Although some progress has been made in learning how to "passivate" grain boundaries in

silicon, the situation for small-grained material remains unsatisfactory. Several casting processes yield large-grained (millimeter- and even centimeter-sized) silicon, and these show considerable promise for achieving acceptable efficiencies at a significantly reduced cost. Similarly, work on continuously pulled ribbon silicon has demonstrated that good efficiencies can be obtained from such material. Both of these approaches suffered considerably from cutbacks in funding several years ago, but a solid base exists for further progress if and when additional funding becomes available. Because of the maturity of silicon technology, new techniques for achieving high efficiencies, new growth processes, and highly automated processing provide a combination that may be the best available for flat-plate collectors during the next 50 years. In this connection, the glow discharge implantation and laser processing developed at ORNL offer some very attractive features.

Thin-film technology

In this approach, methods of depositing thin semiconductor films on low-cost substrates are sought. The use of thin films is based on the direct band-gap nature of the electronic transitions which makes the absorption coefficient so high that complete absorption of the solar radiation occurs within a few microns of the surface. Typical materials are copper indium diselenide ($CuInSe_2$), cadmium telluride (CdTe), GaAs, and amorphous silicon (a-Si) (discussed below). The rationale behind the use of thin films is not only to eliminate material that is not needed but, more important, to eliminate the costly growth and wafer-slicing steps associated with single-crystal Si and GaAs. The films may be either fine-grained polycrystalline or expitaxial if a suitable substrate can be found. If the material is polycrystalline, ways must be found to passivate the grain boundaries, or else materials in which grain boundary effects are minimized must be used. Of course, it is also crucial to establish deposition techniques that ensure high-quality, defect-free material within the individual grains. Gallium arsenide provides an interesting example of a material that has been grown as a single crystal in thin-film form and then separated from its growth substrate. Efficiencies as high as 19% have been reported in small-area laboratory cells using this material.

Amorphous silicon alloys

Amorphous (a) silicon is a thin-film material on which the current effort is so great that it is listed here in its own category. Much of the interest in a-Si arises because of two factors, namely, (1) its absorption coefficient is sufficiently high that only thin films of the material are needed, and (2) large-area films can be deposited very easily by glow discharge and other techniques. The a-Si films must contain hydrogen to compensate the dangling covalent bonds of silicon, but the hydrogen is easily incorporated during the deposition process. Also, hydrogenated silicon-germanium (Si-Ge) alloys in which the band gaps can be tailored over a wide energy are easily formed. Solar cells made from a-Si show a light-induced degradation effect (Stabler-Wronski effect), and much of the current research effort is directed toward understanding and eliminating this effect. Because of the ability to easily alter the band gap by controlling the gas mixtures during the deposition process, multi-junction a-Si solar cells can be made readily.

Another reason for enthusiasm among some researchers about a-Si is the rapid rate at which efficiency improvements have been made. Thus, small laboratory cells (<1 cm^2) have gone from $\approx$2% efficiency in 1975 to $\approx$12% in 1986. Other researchers believe that

further improvements will be very difficult to realize and that the achievement of high efficiencies in large-area cells is still a long way off.

Modules

In flat-plate photovoltaic systems, the assembly of individual cells into modules involves somewhat more and different problems than are encountered in making concentrator modules. The principal problem concerns the number of electrical connections that must be made among a large number of cells. In a system designed with an operating lifetime of 30 years, the integrity of the interconnects and their protection against hostile agents in the environment becomes even more important than the protection of the cells themselves. In fact, a well-encapsulated solar cell should continue to operate at one sun indefinitely if the metallization can be protected. There is nothing in the cell to wear out.

Because large cells reduce the number of interconnects that must be made, it is generally better to make cells as large as possible (consistent, of course, with other requirements). The potential for making very large single cells by low-cost deposition techniques is one of the most attractive features of thin-film and amorphous solar cell technology. Some sacrifice in efficiency can be accepted to achieve this end.

For crystalline silicon flat-plate systems, R&D related to modules and to manufacturing methods for assembling them inexpensively is of the utmost importance and is receiving a great deal of attention.

2.4.5.6 Performance, projections, and research opportunities

In this section, the current status of cell efficiency in the various types of PVEC approaches is tabulated, and projected cell performance is discussed. The R&D needs and opportunities to achieve the projected performance goals are considered. Much of the material is taken directly from the DOE *Five Year Research Plan (1987-1991)* of the National Photovoltaics Program (NPP). Table 2.4-9 shows information on currently achieved cell efficiencies for the various major categories of cell types, as taken from the NPP five year plan. Theoretical efficiency limits based on no-loss devices are also given. It should be understood that these are very approximate numbers, dependent to some extent on how the calculations are made. They are not likely to be realized in practice but are useful for comparing where the various approaches may be leading. A few comments are made about the likely progress from the left side of the table to the right side.

Flat plate c-Si

The 22% measurement appearing in Table 2.4-9 for the small cells is a bit misleading because the measurements were not made under the conditions normally used for flat plate. Also, the area was considerably less than 1 cm^2, and the cells were made from selected areas on a wafer that showed very high minority carrier lifetimes. However, in very recent work on cells with an area of 12 cm^2, the 19% mark has been exceeded.

Even though silicon technology is very mature relative to other materials, it is generally believed that significant increases in the quality of solar-cell-grade Si can be achieved. If this is indeed the case, it should be possible to reach efficiencies of 25% for small-area cells by the year 2000 if, at the very least, no decrease is made in funding for this type of research.

Table 2.4-9. Currently achieved efficiencies of various types of laboratory cells

Cell type[a]	Current technology (1986) efficiency (%) Small cells (<1 cm^2)	Large cells (100 cm^2)	Theoretical efficiency limit (%) small cells (<1 cm^2)
Flat-plate c-Si			
pc/ribbon silicon	22	18	30
Thin Film			
GaAs	19		30
Multijunction	22		40
Thin Film			
a-Si	11	9	25
Multijunction	13	9	35
Concentrator			
Silicon	27		35
GaAs	26		37
Multijunction	26		45

[a]a-SI = amorphous silicon.
c-SI = single-crystal silicon.
pc = polycrystalline.
Source: Based partly on data from the U.S. Department of Energy, *Five-Year Research Plan (1987-1991),* National Photovoltaics Program, 1987. Theoretical efficiency limits are based on no-loss devices.

The structure of such cells will probably be quite complex and the fabrication steps costly. Therefore, it seems likely that the R&D thrust in this area after the year 2000 should be toward (1) achieving the 25% mark in large-area cells and (2) simplifying the structure and refining and automating the fabrication techniques. It is important to emphasize again the need for large-area cells. One 10 cm × 10 cm cell covers approximately the same area as twenty-five 2 cm × 2 cm cells. Depending on how the cells are wired together, the large cell saves ≈50 interconnects relative to the 4-cm^2 cells. Because of this, even if the cell efficiency is somewhat lower for the large cells, the assembled module efficiency could be higher.

Flat-plate pc-Si

Meaningful efficiency figures for cells made from polycrystalline (pc) and ribbon Si are difficult to establish because the material characteristics vary greatly from batch to batch.

Semicrystalline (very large grained pc) Si is somewhat more reproducible. Also, it is not clear at this time how the advances in c-Si cell technology will contribute to advances in cell technology for this type of material. At this writing, it is the author's understanding that reasonably large area cells of ≈16% efficiency have been obtained from selected stock of both pc and ribbon Si. It should be obvious from previous discussion that the issue is the material itself and not how to make a high-efficiency cell from good material.

Flat-plate thin-film GaAs and multijunction cells

The measurements in Table 2.4-9 represent a rather specialized case. The GaAs thin film was formed on the "growth" substrate and then attached to another substrate before the cell could be fabricated. The area of the cell was small. Similarly, the multijunction cell was formed by putting the thin film of GaAs on a thick Si substrate. With the recent rapid developments in c-Si solar cells, it is difficult to understand how this type of cell could become an important element of flat-plate technology. However, there is no reason that it should not be seriously considered for multijunction concentrator cells.

Flat-plate a-Si single and multijunction cells

The efficiency improvements in this type of cell in recent years have been impressive and, to a great extent, justify the emphasis that is being put on a-Si and its alloys. Nevertheless, it seems to the author that the theoretical limits shown in Table 2.4-9 are entirely too optimistic and represent at best an enthusiastic guess. The problem is simply that not enough basic research on a-Si alloys has been done yet to form a foundation for reliable extrapolations. It is clear, however, that 20% efficient, large-area, multijunction a-Si cells made by refinements of current techniques would practically revolutionize the photovoltaic solar energy program. This possibility should be viewed as a long-range (≈50-year) goal to be pursued through a carefully planned and coordinated program. The current heavy emphasis on a-Si solar cells should not be allowed to interfere with more mature approaches such as flat-plate crystalline and polycrystalline Si and GaAs concentrator systems.

Concentrator systems

The theoretical limits shown in Table 2.4-9 for these systems are probably closest to being realizable. However, it must be kept in mind that the cell efficiencies for concentrators are not directly comparable to those in flat-plate systems until the optical losses in the concentrators themselves are taken into account. Moreover, the lack of response to diffuse sunlight also contributes to an overall lowering of the system efficiency and restricts concentrator systems to certain areas, although very large ones, of the United States. In spite of these reservations, it seems that 20% concentrator <u>modules</u> can be achieved in the near term and probably 25% modules sometime within the 50-year term of this study.

Table 2.4-10 shows part of a table labeled "Research and Development Tasks" adapted from the DOE *Five Year Research Plan (1987-1991)*. Many of the items are quite general and follow logically from the discussions in this report. From the standpoint of a laboratory such as ORNL that has had only very small efforts in the photovoltaic area, two

Table 2.4-10. Research and development tasks

Research area/task	Five-year goal
Materials and devices research	
1. Fundamental and supporting research	Conduct fundamental research on promising new cell materials and devices and provide supporting measurements and modeling capabilities.
2. Flat-plate thin films	Increase the efficiency of large-area (1000-cm^2) submodules to 10% in single junctions and 13% in multijunctions using amorphous and polycrystalline thin-film materials, and resolve device stability issues.
3. Flat-plate crystalline silicon	Continue materials research activities in support of low-cost, high-efficiency, crystalline-silicon development.
4. Concentrators cells	Increase the efficiency of module-ready cells to 27%; increase efficiencies of experimental single-junction cells to 30% and of multijunction devices to 32%.
Module research	
5. Flat-plate modules	Establish technology base in support of achieving cost-effective and reliable (30-year life expectancy), flat-plate, thin-film modules.
6. Concentrator modules	Establish the technology for 22% efficient, $150/$m^2$ modules with 30-year lifetimes.

Source: Based on data from U.S. Department of Energy, *Five Year Research Plan (1987-1991),* National Photovoltaics Program, 1987.

questions must be addressed: (1) Are there R&D areas in which we can contribute? and (2) Do we wish to make a commitment to photovoltaics? The answer to the second question is largely a management decision, and no attempt to address it is made here.

The answer to the first question is clearly in the affirmative. The pioneering work at ORNL on the use of glow-discharge implantation and pulsed laser processing to make very high efficiency solar cells is widely recognized and highly regarded. However, the ORNL approach is still seen by many researchers in photovoltaics as a curiosity rather than a

technique that is likely to be used eventually in production. Conversely, most scientists who are studying new processing techniques to make very high efficiency cells are well aware of the potential of the ORNL methods. The possibility that these methods will be essential in obtaining the very highest efficiency cells is quite real. It is based on the capability of eliminating all high-temperature processing steps that may result in the degradation of the electronic properties of the silicon. It is also possible that, for the same reason, grain-boundary effects can be greatly minimized by laser processing techniques.

ORNL is in a very good position to continue to lead in certain areas of advanced processing but not in the overall semiconductor area. The microelectronics capabilities so successfully used by the best photovoltaic groups simply are not available at ORNL. If ORNL is to continue to contribute in the area of photovoltaic research, a much more serious commitment to the general area of semiconductor and microelectronics R&D must be made. In addition, a more vigorous photovoltaic research effort must be reconstituted. Significant amounts of money and personnel effort will be required, but ORNL does have the capability of contributing in the general area of development of advanced processing techniques.

Another somewhat related area in which ORNL should be able to contribute is automated, computer-controlled manufacturing. The laboratory background in robotics, artificial intelligence, and related disciplines should be extremely useful in developing manufacturing methods that would result in lower cost and more reliable photovoltaic systems. An obvious synergism exists between research and development in the two areas of advanced processing techniques and advanced manufacturing methods. It seems somewhat of an oversight that neither of these areas is specifically mentioned in the DOE *Five Year Research Plan (1987-1991)* of the National Photovoltaic Program.

ORNL should be aware of the possibility that the Bush administration may be much more favorably disposed to conservation and renewable energy research than was the Reagan administration over its entire eight-year tenure.

2.4.5.7 System and economic considerations

In this section, two modes in which photovoltaic systems might separate are examined from an elementary economic point of view. The first of these, a load-leveling, fuel-saver mode, is the most likely candidate for near-term application of large-scale photovoltaic systems. The second mode is in a stand-alone system that requires some form of storage and back-up capability. The assumptions and calculations have been put into tabular form for clarity and emphasis (see Table 2.4-11).

It can be seen from Table 2.4-12 that even if DOE and EPRI goals are met, stand-alone solar photovoltaic systems would be much more expensive than nuclear- or coal-based power because of the cost of storage and backup. Unless both nuclear and coal become socially unacceptable or unless there is a continuing reduction in photovoltaic costs well below $0.06/kWh, it is difficult to visualize solar photovoltaics as a major power source during the next fifty years. As a supplement to conventional energy sources, the prospects are much brighter.

Table 2.4-11. Solar photovoltaics as a fuel saver

Assume, as does the DOE 5-year research plan[a], that a \$0.06 to \$0.10/kWh photovoltaic (PV) technology is achieved in the next 20 years (\$0.06/kWh for the U.S. desert southwest and \$0.10/kWh for other southern locations).

Assume that the PV technology is used on utility grids to reduce load borne by other sources of capacity (i.e., it is a fuel saver).

Compare the PV technology with a 50% efficient combined-cycle or advanced steam-injected gas turbine or molten-carbonate fuel cell, each using natural gas as the fuel.

$$\$0.06/\text{kWh} \times \frac{1}{3413\ \text{Btu/kWh}} = \$17.6/10^6\ \text{Btu (electricity)} \quad ,$$

$$\$0.10/\text{kWh} \times \frac{1}{3413\ \text{Btu/kWh}} = \$29.3/10^6\ \text{Btu} \quad .$$

For PV to pay off, natural gas would need to cost more than $\$9/10^6$ Btu and $\$15/10^6$ Btu respectively.

If the utility summer peak coincides well with the PV peak, utilities should be willing to give a capacity credit to the PV system. In other words, PV becomes more valuable than just a fuel saver—it can also be relied on to replace other capacity. If we assume the device displaced is a gas turbine at \$500/kW capital cost, that the gas turbine runs 30% of capacity during the year, and that it lasts 15 years, then the capital charge displaced is

$$\frac{\$500/\text{kW} \times \$0.14\ \text{(capital cost factor/year)}}{8760\ \text{h/year} \times 0.30} = \$0.027/\text{kWh} \quad .$$

On this basis, if we assume an 80% capacity credit, gas would need to cost

$$\frac{\$0.06/\text{kWh} - \$0.022/\text{kWh}}{3413\ \text{Btu/kWh}} \times 0.5 = \$5.60/10^6\ \text{Btu} \quad ,$$

and $\$11.40/10^6$ Btu if the PV device produces electricity at \$0.10/kWh.

[a]*Source:* Based on data from U.S. Department of Energy, *Five Year Research Plan (1987-1991),* National Photovoltaics Program, 1987.

Table 2.4-12. A stand-alone solar system consisting of photovoltaics plus battery storage plus a high-efficiency combined-cycle gas turbine for backup (e.g., for rainy days)

Assumptions

1. Turbine must be used 20% of the time.
2. The load to be supplied is time invariant night and day.
3. The sun shines on average 40% of the day.
4. The turbine costs \$500/kW.
5. Gas costs \$10/10^6 Btu.
6. Capital cost rate for the turbine is 20%.
7. The photovoltaic system supplies power at an average cost of \$0.06 to \$0.1/kWh [includes operating and maintenance (O&M) costs].
8. The battery cost ≈ \$0.04/kWh (including O&M/costs) and can be charged and discharged at 70% efficiency.

Total system cost is

$$\{(\$0.06 \text{ to } \$0.10/\text{kWH}) \times 0.4 \frac{\text{sunshine hours}}{\text{total hours}}$$

$$+ \{ \frac{[(\$0.06 \text{ to } \$0.10) + 0.04/\text{kWh (battery cost)}]}{0.7 \text{ (efficiency of battery)}} \times 0.6\} \times 0.8$$

$$+ (\$0.2 \times \$0.07/\text{kWh}) \text{ gas fuel cost}$$

$$+ \$0.01/\text{kWh (turbine capital cost)}$$

$$= \{(0.024 \text{ to } 0.04 + \frac{(0.036 \text{ to } 0.06 + 0.024)}{0.7} \} \, 0.08$$

$$+ 0.014 + 0.01 = \$0.11/\text{kWh to } \$0.15/\text{kWh} \; .$$

This cost compares with \$0.056-\$0.071/kWh generation and O&M cost based on current coal and nuclear technology respectively. The Electric Power Research Institute (EPRI) suggests that advanced technology might reduce the future cost of coal and nuclear generation to \$0.037 and \$0.04 respectively *(Energy Outlook, The Foundation for EPRI R&D Planning,* EPRI 1988.)

2.4.5.8 Summary

The design principles for very high efficiency, single-crystal solar cells are now well understood. Recent work on developing fabrication techniques to implement these principles in laboratory cells has led to remarkable increases in the efficiency of photovoltaic energy conversion. For example, in cells designed to operate at one sun, the efficiency has been raised from ≈16% to >20% AM 1.5 in little more than five years. With further improvements in fabrication techniques and with higher quality silicon, additional efficiency gains can be expected. Although similar design principles apply for polycrystalline and amorphous materials, additional constraints that are not yet fully understood also must be taken into account.

The approaches to photovoltaic energy conversion can be divided into the two major categories of flat-plate and concentrator systems, with the following features.

Flat-plate systems

- operate in one-sun, diffuse sunlight;
- premium on low-cost, large-area, high-efficiency cells;
- several different approaches using a variety of materials are being investigated; and
- material in near term will be crystalline and/or large-grained pc-Si (a-Si may play an important role later).

Concentrator systems

- solar concentrations up to ≈500 suns;
- premium on highest efficiency cells, with less emphasis on cell cost;
- require relatively inexpensive concentrator system;
- must have tracking system to follow the sun;
- inherently higher efficiencies of concentrator cells help offset cost of tracking system; and
- materials in near term are Si and GaAs (combinations of Si and GaAs in multijunction cells may come later).

A further subdivision of classes of photovoltaic systems can be made on the basis of materials and the form in which the materials are used. Three of the most important subdivisions are the following.

Crystalline Si and GaAs

Crystalline (c) Si cells must be thick (200 to 400 μm) because of the low absorption coefficient of Si in much of the solar spectrum. Float-zoned (Fz) Si has the highest quality, but it is costly and material is wasted in sawing and cutting the round ingots. Cells a few microns thick can be made from GaAs, but the growth of large areas of single-crystal thin films remains a problem. Crystalline silicon is the most mature photovoltaic material technology.

Cast and ribbon silicon

These are two promising methods for circumventing the high cost of growing, sawing, and cutting wafers from crystalline Si. The quality of material grown in this way, though steadily improving, is not yet comparable to that of Fz Si.

Thin-film materials

Amorphous (a) Si, CdTe, $CuInSe_2$, and other semiconductors can be grown, by a variety of methods, in thin-film form on inexpensive substrates. Thin-film material is potentially the lowest cost approach to photovoltaic energy conversion. The challenge is to obtain acceptable cell efficiencies while maintaining the low cost of the processing.

Although it is seldom straightforward to translate a laboratory cell into production, it is apparent that the laboratory cells are the most reliable guides to likely developments in production cells. The current and projected efficiencies (η) of the most promising cell types are given below, together with a few descriptive comments.

Current efficiencies

- one-sun crystalline c-Si — 20 to 22%
- concentrator (100 suns c-Si) — 25 to 28%
- thin-film GaAs (1 sun, $\approx$1 cm^2) — 19 to 22%
- a-Si (1 sun, <1 cm^2) — 11 to 13%
- a-Si (1 sun, 100 cm^2) — 9%

Projected near and midterm (20 years)

- one-sun c-Si (5 years, mature) — 24 to 25%
- 100-sun c-Si (5 years, mature) — $\approx$35%
- multijunction concentrator (20 years, development continues) — $\approx$35%
- small area multijunction a-Si (20 years, development continues) — $\approx$20%

Projected long term (50 years)

- one-sun c-Si: emphasis on low-cost growth (casting and ribbon) and automated processing;
- 100-sun c-Si: evolutionary refinements of cells and concentrators;
- multijunction concentrator: new materials, new fabrication techniques, $\eta \approx 40\%$; and
- large-area thin film and a-Si: new materials, new growth and fabrication techniques, $\eta \approx 25 - 30\%$.

The assembly of individual cells into modules results in a decrease in efficiency because of electrical losses in the interconnections, slight mismatches in cell efficiencies, etc. If cell development proceeds more or less along the lines mapped out above, it seems likely that field-tested 20% modules for both flat-plate and concentrator systems can be achieved before the midpoint of the 50-year time of this study. During the second half of the period,

further improvements to the 25 to 30% range are possible if progress on multijunction concentrator or thin-film, flat-plate collectors meets or exceeds current expectations.

One of the most important aspects of cost reduction would seem to be related to the implementation of highly automated, computer-controlled manufacture of cells, modules, and arrays. It seems likely that, by the year 2020, the basic research will have been done and the technology will have been established to realize solar cell modules of ≈30% efficiency. It is not likely that these modules can be made cost effective without the introduction of manufacturing methods much more sophisticated than those now in use.

Economic analysis indicates that operationally proven photovoltaic systems can become economically competitive with other sources of energy early in the next century. The most promising near-term approach appears to be concentrator systems operating at ≈100 suns and used by utility companies in a load-leveling mode.

2.4.6 Wind as a Renewable Energy Resource *(by R. A. Hawsey and R. J. Ferraro)*

2.4.6.1 Summary

Cost-effective and extremely competitive wind systems are attainable in the next five to ten years. Imminent from military researchers are high-temperature power semiconductors that can significantly "leap frog" offshore and domestic technologies in today's wind-control systems. These advanced electric power-shaping devices are now being planned for U.S. defense and space projects. Application of new solid state switches promises drastic equipment weight, volume, and cost reductions combined with greatly increased efficiency and reliability. Innovative researchers in power electronics point to additional "smart features" that may be integrated within the devices by intelligent control and protection.

An immediate opportunity exists to initiate a joint-venture project with government, component developers, equipment manufacturers, utilities, and the Electric Power Research Institute (EPRI). The project's thrust would be to produce a strategy for aggressively identifying and defining the next steps needed to qualify commercial sector synergism based on high-temperature semiconductor technology. The strategy should contain a tactical plan to revise the perception of wind economics and risk. Revised assessments should include this new technology's potentially major impact on the life cycle and capital equipment cost for wind systems of a renewable energy resource.

2.4.6.2 Introduction

Wind energy technology means generating electric power from the wind. Wind generators use an inexhaustible (renewable) resource, range in size from a few watts to several megawatts, and can be constructed and installed in a matter of months. Therefore, wind technology can help increase planning flexibility and decrease the financial risks associated with large, "conventional" generating units. In addition, wind turbines can be designed to operate safely and reliably and may be compatible with many environments and land uses. Wind technology can help achieve the U.S. goal of a diversified energy resource system.

The two basic approaches for converting wind to electricity are (1) vertical-axis wind turbines (VAWTs) and (2) horizontal-axis wind turbines (HAWTs). The primary difference between the two is the orientation of the turbine axis of rotation to the wind stream and the ground. Typical examples of each wind turbine type are shown in Figs. 2.4-6 and 2.4-7.

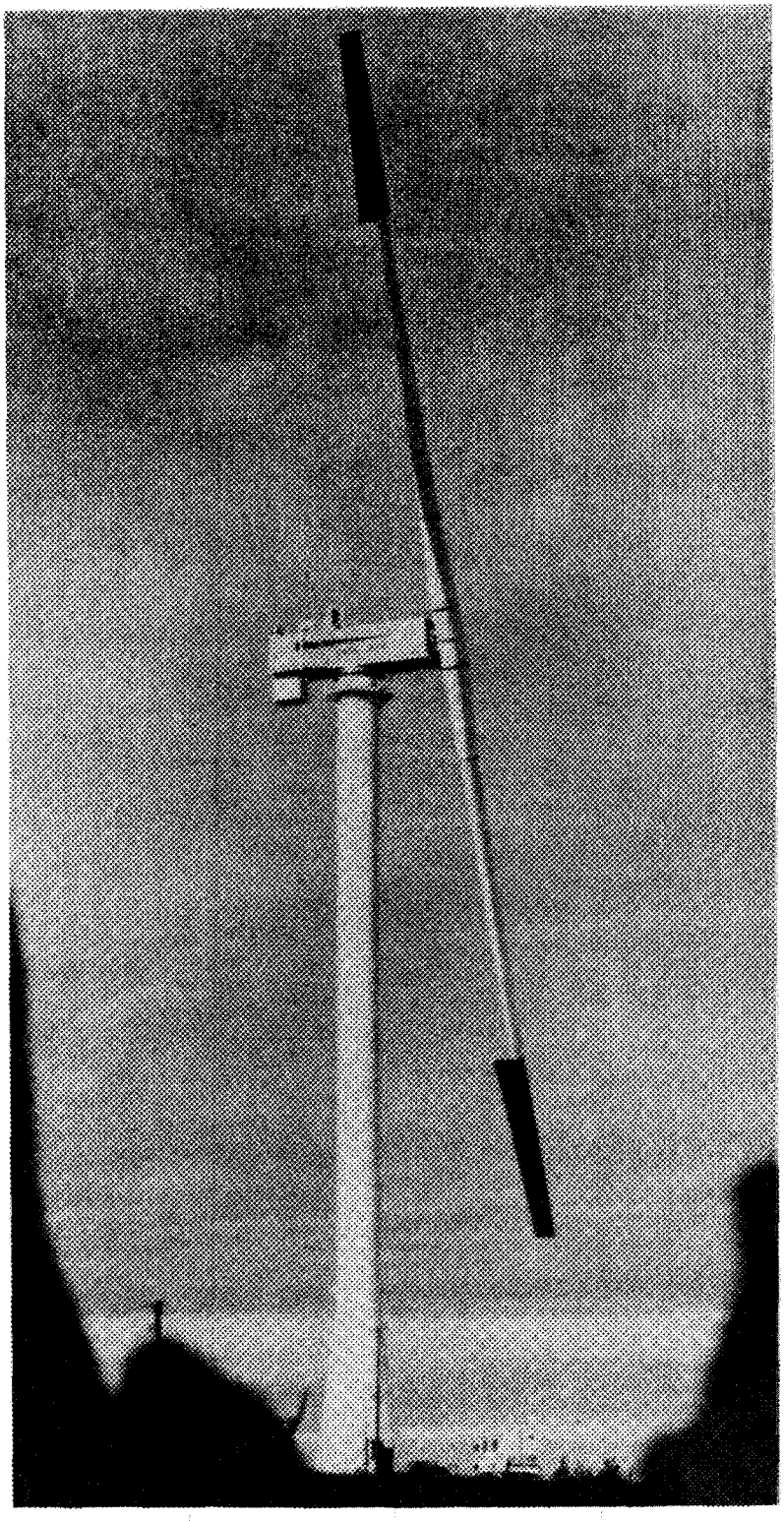

Fig. 2.4-6. A horizontal-axis wind turbine (Photo K/PH-88-3509). *Source: Five Year Research Plan 1985-1990, Wind Energy Technology: Generating Power from the Wind,* DOE/CE--T11, January 1985.

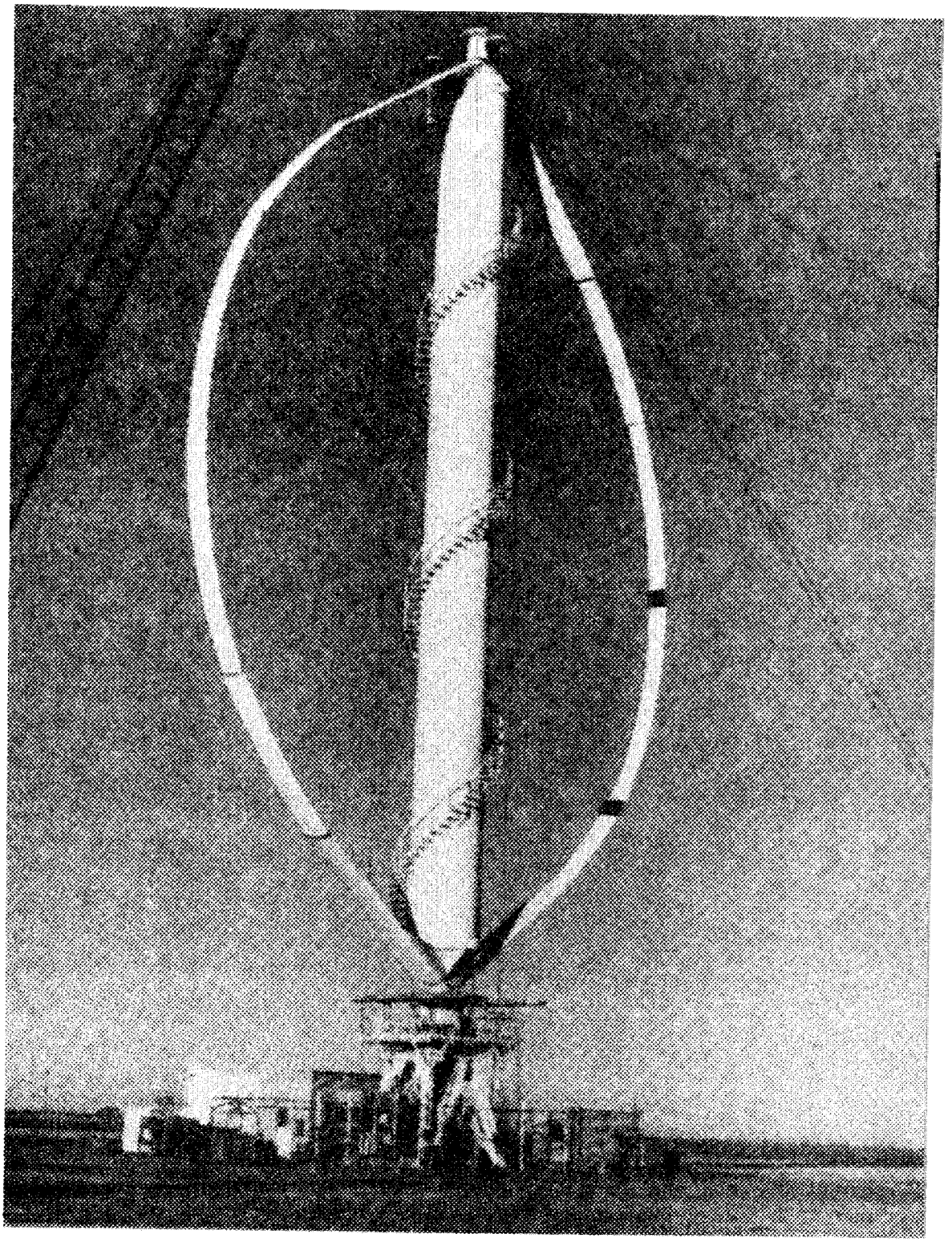

Fig. 2.4-7. A vertical-axis wind turbine (Photo K/PH-88-3507). *Source: Five Year Research Plan 1985-1990, Wind Energy Technology: Generating Power from the Wind,* DOE/CE--T11, January 1985.

Each orientation has an effect on the five primary subsystems: (1) blade or rotor, (2) drive train (gearbox and generator), (3) tower, (4) turbine support systems (cables, controls), and (5) balance of plant subsystems (substation equipment, ground support equipment) (DOE 1985).

The basic concept in wind turbines is to convert wind energy into rotational motion of an airfoil mounted on a shaft by using the Bernoulli principle: lower pressure on the top (leeward side) and higher pressure on the bottom (windward side) of the airfoil results in aerodynamic lift, causing the rotor to turn.

Status of wind energy technology

Improvements in the technology related to wind subsystems, combined with federal and state tax incentives (which expired in 1986), resulted in the creation of a market for electricity grid-connected wind turbines in the United States. Most of the rapid commercialization of wind power was sparked by independent power producers operating mainly in California. Expansion beyond that relatively modest market is necessary, however, if wind power is to significantly affect the U.S. energy supply. The cost of wind-generated electricity must be reduced from between $0.10 and $0.15/kWh (1984 dollars) to $0.04/kWh (1984 dollars). Wind turbine characteristics of total annual energy production, installed cost, operating and maintenance cost, system availability, and life expectancy influence the ability of wind to compete with other energy sources.

The wind energy market today

While wind energy technology is no longer rapidly expanding in the United States, overseas markets—particularly those of Western Europe and Japan—are growing rapidly. American manufacturers are taking advantage of export opportunities, thus creating American jobs.

Additional factors beyond economics provide incentive for the use of wind resources in the United States. Wind energy (and renewables in general) reduces this country's dependency on imports and is compatible with the movement in U.S. industry to higher technology bases. Wind energy technology matured in a very short period (1981-85) and is now ready. Over 660 MW of installed capacity in the United States, almost exclusively in the <1-MW class, attests to the large number of modular units. However, wind use in the United States is highly regional. The modular nature of wind allows matching regional energy requirements and demand growth with local renewable resources. Finally, wind energy allows utilities to add to the energy supply in small increments, with corresponding reduced lead time and reduced capital outlay.

The future of wind energy technology

In 1986, representatives of utilities, federal agencies, a wind power developer, EPRI, and select consultants convened to assess the prospects and requirements for geographic expansion of wind power usage (EPRI 1986). This group arrived at consensus on the following points.

- Substantial undeveloped wind resources are available in the United States. To understand the full potential within the undeveloped areas will require intensive

efforts to quantify local wind variations, to determine site accessibility, and to identify institutional restrictions on development.

- The use of wind power is likely to grow gradually over the next 15 years, regardless of technologic advances. Nevertheless, the application in key areas of power electronics might significantly enhance the attractiveness of wind power technology. Examples include the development of electronic controls for variable-speed generators by wind turbines and improved protection devices for wind power stations.

Wind presents an opportunity for growth when used to displace aging conventional capacity or planned new generation equipment of nonrenewable type. The low per-unit cost and environmental benefits associated with wind (no waste heat, no cooling water, no carbon dioxide or toxic waste/emissions) offer an alternative to utilities with mortgages on multibillion-dollar fission reactor plants. The regional wind resources (see next section) must be known, however, if wind's potential as a promising future energy resource is to be realized.

The benefits of wind also depend on application-specific R&D programs. Many of these programs have been funded heretofore by the U.S. government [DOE or the National Aeronautics and Space Administration (NASA)] or EPRI.

Among the most recent activities is the application of new power electronics control to wind turbine systems. Current wind turbines operate at a constant rotor speed to comply with the constant electrical frequency established by the utility interface. By using suitable power electronics circuitry, it is possible to decouple the wind turbine's rotor speed from the utility system's operating frequency and thereby allow the wind turbine to operate at variable rotor speed. A variable-speed wind turbine would provide prospective gains in torsional dynamics and energy capture relative to its constant-speed counterpart. The improved torsional dynamics, in turn, would reduce structural loads and thereby possibly reduce weight, increase component life, or both. The research challenge is to develop a suitable power electronics package that provides optimal blend of the above-mentioned benefits and to integrate that package into a wind turbine system, while maintaining an overall system cost-to-benefit ratio lower than unity. We discuss those aspects of wind technology R&D that can make a difference in the commercialization process.

2.4.6.3 Wind resources

Finding a suitable site for a wind power station is crucial to the economic feasibility. In addition to an adequate wind resource, the site must have suitable topography, be accessible to the utility system, be accessible by transportation, and be acceptable from environmental, regulatory, and public perspectives. However, the most important factor in siting a wind system is the wind resource at the site. Characterization of the wind resource at a particular site is greatly complicated by the spacial and temporal variability of the wind in a given area. Techniques for extrapolating wind measurement data from one site to another site have limited accuracy, and the available data for existing sites are usually inadequate to fully characterize the resource at the site—much less at other sites. Consequently, extensive customized wind measurements are required at most sites to establish their full potential. Because wind measurements can be costly and time consuming to plan and implement, a systematic approach to the problem of wind resource measurements is required.

Regional wind resource data such as the natural wind atlases (DOE 1987) (see Fig. 2.4-8) are useful for only initial screening of a region for wind power development potential. Detailed data collection and analysis are required to identify potential site areas and to verify the potential at specific sites. The data are necessary to define wind turbine and wind power system design parameters, assess operational requirements, and estimate the annual energy production potential.

The first step in a detailed regional wind resource evaluation involves the characteristics required of site areas that would make them candidates for wind power development. This step includes definition of wind resource requirements; climatology; and other area characteristics such as topography, demographics, utility system access, and transportation access.

The second is the review of existing regional databases to obtain information needed to identify potential site areas and to help guide future wind resource assessments in specific areas. Databases from various government and private sector organizations can be a good starting point for this step.

The third step includes identification of those areas within the region of interest that appear to have potential for development of wind power using the criteria developed in step 1. Application of the siting guidelines developed by EPRI (1983b) to select potential areas is recommended.

Once a potential site area has been identified, step 4 is to proceed to collect wind resource data for the assessment of the overall potential in the specific area. Data generated with site wind resource measurement equipment should be transferred monthly from on-site storage for summary and analysis. At least one year, and preferably several years, of data collection is desirable.

The wind resource data collected for each site should include 10-minute (nominally) average volumes of wind direction and deviation, wind speed and peak velocity, and temperatures. This information can be used to develop persistence tables for the parameters and charts showing the diurnal variations of the wind speed. Analyses can be performed to correlate the collected wind data to the regional climatology, local topography, and daily and seasonal utility load variations. The data can be used also to estimate wind power availability and wind turbine performance. Finally, the data can be used to perform production costing analyses to estimate system energy cost savings and system reliability impacts resulting from potential wind power stations at specific sites in the candidate areas.

Clearly, a number of areas in the United States have substantial wind resources, but the potential for the development of these resources needs further evaluation. The level of effort involved necessitates establishing a coordinated program, with parties of vested interests, to integrate, document, and disseminate wind measurements on a long-term, constant basis. Such a program would entail developing long-term maintenance of data collection stations in promising wind resource areas.

2.4.6.4 Update on wind turbine technology

Among the key factors that led to the rapid growth of wind power over the past five years were the advances achieved in wind turbine technology. The cost of producing wind-derived electricity in excellent wind resource areas is now sufficiently low that it is approaching the threshold of economic feasibility without tax credits in some parts of the country. Through further evolutionary improvements in turbine design, mass production, and technological advances, it should be possible to further decrease the cost of producing

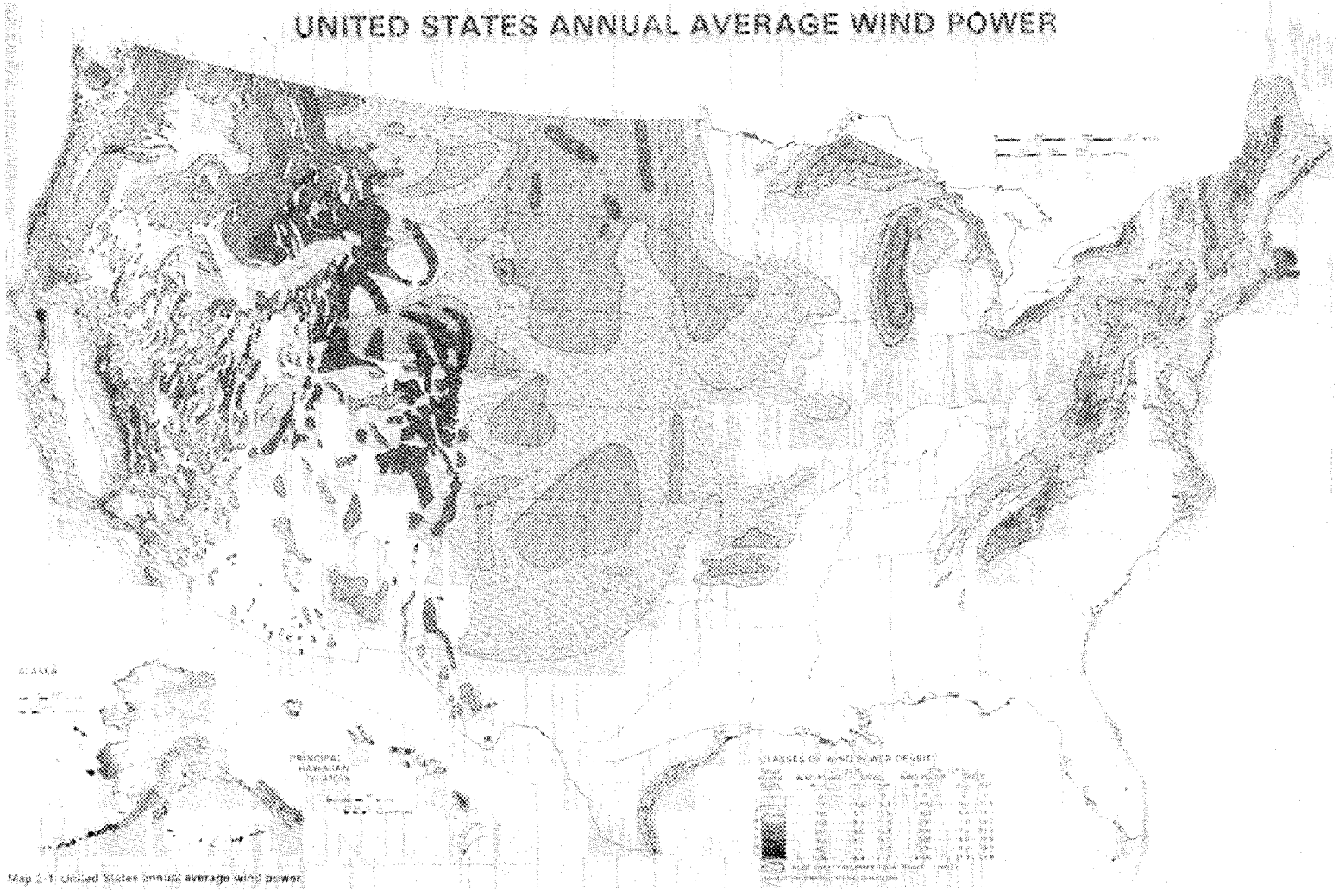

Fig. 2.4.8. U.S. annual average wind power (Photo K/PH-88-3508). *Source: Wind Energy Resource Atlas of the United States,* DOE/CH 10093-4, Solar Technical Information Program, Solar Energy Research Institute, Golden, Colo., March 1987.

electricity with wind turbines. Although there are numerous areas in the United States that appear to have excellent wind resources, as wind power usage increases in this country it will sometimes expand into regions with average wind speeds somewhat lower than those at current sites of intense wind power extraction. It is natural to ask whether sites with more moderate wind speeds will introduce new technical problems. The available information indicates that no significant new technical problems will be encountered at moderate wind-speed sites. In fact, many technical problems should be less troublesome. The economic impact of lower energy yields will be the major problem at moderate wind sites.

Expansion into new site areas will require redesign to optimize energy yield. These changes consist of rotor speed reduction, possible generator size reduction, and control setpoint changes. Technical challenges such as these continue to hinder additional interest at many sites. R&D can provide definite, near-term improvements for wind energy use. More accurate and reliable design methods are needed to lower the cost of design, development, and product improvement. Methods for calculation of system performance and structural loads must be improved. It is becoming clear that the use of variable-speed generator systems would enhance energy yield, reduce operating structural loads for a small increase in system cost, and improve utility system compatibility. Thus, development of variable-speed generator systems has a potential of providing major benefits to wind energy economics.

New airfoils designed specifically for wind energy applications also hold promise for expanded wind energy usage. Not only can energy yield be increased, but maintenance costs associated with blade cleaning and repair will be reduced. None of these improvements offers the promise of a major breakthrough in wind energy usage. However, with wind power on the threshold of economic viability, small improvements in wind turbine technology could have substantial impacts on the future geographic expansion of wind energy capture.

2.4.6.5 Wind power station technology

In addition to an adequate wind resource and a suitable wind turbine, the development of economically feasible wind power stations requires careful attention to station design. The balance of plant costs is a substantial part of the total cost of a wind power installation, and decisions made by the station designers with respect to the power collector network, protection and control schemes, and turbine micrositing will have significant impact not only on the capital cost of the station but also on energy production and operation and maintenance requirements and costs. For example, economies of scale for large transformers are offset by the number and length of conductors required to link with multiple turbines. Close turbine spacing shortens conductor lengths, permits more turbines per transformer, and reduces land costs. These advantages can be offset, however, by reduced energy capture and structurally hazardous wakes from close spacing. Little information is available on these trade-offs. In current station designs, engineering optimizations are limited. Designs with the lowest initial costs are usually selected.

2.4.6.6 Institutional and environmental issues

A number of factors may promote the development of wind power in the United States. Perhaps the most important factor is the relatively moderate environmental risk posed by wind power installations.

Other factors that may promote the development of wind power include the modularity and the relatively short construction lead time required for wind power stations, federal legislation that has paved the way for wind power development, and early utility experience in siting wind power stations.

Factors that may limit the growth prospects for wind power include both environmental and institutional issues. Environmental issues include possible noise generated by large clusters of wind turbines, the visual impact of large clusters of wind turbines deployed in wind power stations, ecological impacts, and possible wind turbine electromagnetic interference with communications systems including television reception. Institutional issues include reduced public acceptance of wind power resulting from a perception that the energy crisis is over, increased state and local regulation of wind development, a lack of industry consensus standards for wind system performance, and possible disputes involving the question of wind access or wind rights.

A variety of tools, either based on early wind system user experience or found in the technical literature, are suggested for use in assessing the set of institutional and environmental risks that may be associated with wind power development in their respective service areas. These risks of wind power development can be minimized or mitigated through careful siting and appropriate advance work with local communities and governments. The use of EPRI (1983a) and Solar Energy Research Institute (SERI) (Shepard and Hubbard 1985; 1986; McClendon and Duncan 1985; Senior and Sengupta 1983; Sengupta, Senior, and Ferris 1983a; 1983b) checklists and reports on these issues relating to wind power development is recommended.

2.4.6.7 Federal Wind Research and Development Program*

The federal Wind Energy Program comprises two subprograms; one studies the basic science of converting wind into usable energy, and the other researches advanced components and systems. These programs complement the efforts of manufacturers and consumers in the wind community (a primary objective of the federal wind program is to transfer research results to industry and other users). In FY 1986 and FY 1987, progress was made in both of these research areas as well as in technology transfer.

The program is structured into research issues within the following broad areas.

- research on wind turbine dynamics
  - atmospheric fluid dynamics
  - aerodynamics
  - structural dynamics
- research on advanced components and systems
  - advanced concepts
  - supporting research

*Adapted from *Wind Energy Systems*, Draft, U.S. Department of Energy, May 17, 1988.

- applied-technology testing and analysis
- multimegawatt systems

Two federal agencies, DOE and the National Aeronautics and Space Administration (NASA), sponsor research and development in wind energy technology. Principal laboratories include

- Sandia National Laboratory (SNL), Albuquerque, New Mexico;
- Solar Energy Research Institute/Wind Energy Test Center (SERI/WETC), Golden, Colorado;
- Pacific Northwest Laboratories (PNL), Richland, Washington; and
- NASA-Lewis Research Center (NASA LeRC), Cleveland, Ohio.

A majority of the private contracts for research go to university laboratories; among the recipients of the largest dollar-value contracts in FY 1987 were Colorado State University, Ohio State University, and Wichita State University.

Basic research

In FY 1986 and FY 1987, the federal wind program continued to sponsor basic research on the science of wind turbine dynamics and advanced technology development to be applied to various configurations of wind machines. Research was aimed at three primary issues: (1) to better understand the physics of atmospheric motion in the boundary layer where wind turbines must operate, (2) to increase knowledge of the aerodynamic characteristics of the rotor and how it extracts energy from the turbulent wind, and (3) to develop models and computer programs to predict the loads and effects that structural vibration has on various materials.

Understanding the atmospheric physics involved in the interaction of wind and wind turbine rotors is fundamental to advancing the technology base, because it is at this junction that wind energy is extracted. An improved understanding is needed for both vertical- and horizontal-axis systems. The influence of wind turbulence on rotor loads, airfoil performance, and wind turbine wakes is not completely understood and therefore cannot be satisfactorily modeled. Because the existing two-dimensional, steady state aerodynamics theories have proven inadequate in explaining the observed performance of wind turbines, there is a need for a three-dimensional, unsteady-flow theory.

Researchers made important progress in FY 1986 and FY 1987 in many of these R&D areas. For example, wind variability in complex terrain can now be predicted more accurately as a result of ongoing modeling and monitoring. Another R&D product is the *Wind Energy Resource Atlas of the United States* (DOE 1987), a comprehensive document released in early FY 1987 that estimates wind resources throughout the nation and enables accurate site selection for wind energy users.

Advanced technology

The primary goal of advanced concepts and systems research is to develop the technology base necessary for the wind industry to achieve major improvements in machine cost, performance, and lifetime, with special emphasis on concepts offering the potential for cost-effective operation under unsteady conditions. Areas capable of improvement include

airfoil design, rotor blade materials, control concepts, and drive trains. Important progress made in FY 1986 and FY 1987 includes the following.

Airfoil family. SERI completed its design and development of a new, special-purpose airfoil family in which performance gains and increased reliability are believed possible without affecting machine cost.

MOD-2 wind turbines. In FY 1986, DOE continued to operate its cluster of three experimental, 2.5-MW MOD-2 wind turbines at Goodnoe Hills, Washington. These HAWTs feature 300-ft-diam., partial span control, upwind rotors; the rotor's center of rotation was 200 ft aboveground.

The MOD-2 project was the first to operationally test large-scale wind turbine performance and interaction. Upon completion of the project on September 30, 1986, the three turbines had generated more than 16 million kWh of electricity and provided scientific and engineering information that would enhance the development of future cost-competitive, large wind turbines, including the MOD-5B.

MOD-5B wind turbine. Development and testing have been completed on the MOD-5B, a 3.2-MW wind turbine constructed by Boeing and shipped for installation on Oahu, Hawaii. In January 1988, the turbine was sold to Hawaiian Electric Industries, Inc. (HEI), for $4.9 million. Under the agreement, HEI will provide the federal government with operational test data for five years.

The MOD-5B turbine has been performing better than expected for a prototype machine. Research and acceptance testing of the MOD-5B was successfully completed ahead of schedule in December 1987. The turbine performance exceeded design estimates for the advanced concepts in the machine. Overall, the turbine performed extremely well, experiencing no significant technical problems.

The MOD-5B is DOE's largest and most advanced experimental turbine. The design and performance parameters borrowed heavily from the MOD-2 research and operation results. Technical characteristics of the two machines are compared in Table 2.4-13.

A key feature of the MOD-5B is the variable-speed electrical generator and control system. It permits the turbine rotor to turn at various speeds over a limited range to match changing winds and thereby produce more energy more efficiently.

Operational testing on the MOD-5B began on schedule on July 1, 1987, and the turbine was dedicated on August 25, 1987. Testing of the MOD-5B was successfully completed in early December, and the machine was transferred to HEI on January 15, 1988, for long-term operation and testing in a utility environment.

During the final week of acceptance tests, a record was set when the MOD-5B ran continuously for 106 h, 22 min, while producing 3.2 MW of power much of the time. Energy capture from the wind was 106%, exceeding the analytical design estimates; operational availability was 94.7%, exceptionally high for an initial test on a new design that employs advanced system concepts.

MOD-0 wind turbine. An earlier, large-scale experimental wind turbine, the MOD-0, was recently dismantled at its federally supported site in Plum Brook, Ohio, after successful completion of its projected operational run. The 100-kW MOD-0 first began operation in September 1975. The turbine was frequently modified to enable testing of advanced concepts in a variety of configurations. Many of these concepts are now used in commercial wind turbines.

Other technology advances in FY 1986 and FY 1987 include design and construction progress on an intermediate-scale, advanced Darrieus (vertical-axis) research turbine in Bushland, Texas. This turbine will be operated for DOE by the U.S. Department of

Agriculture under the direction of SNL. In support of the future generation of commercial VAWTs, the 500-kW, 100-ft-diam, 164-ft-tall wind turbine is nearly twice as large as the commercially available VAWTs now operating on California wind farms. The technology was tested in mid-FY 1988.

Table 2.4-13. MOD-2 and MOD-5B experimental wind turbine specifications

	MOD-2	MOD-5B
Rotor diameter, ft	300	320
Hub height, ft	200	200
Rotor, rpm	17.5	12.9-17.3
Rotor location	Upwind	Upwind
Rotor material	Welded steel	Welded steel
Hub type	Teetered	Teetered
Aerodynamic control	Tip pitch	Tip pitch
Gearbox	Three-stage planetary	Three-stage planetary
Generator type	Synchronous	Variable-speed
Generator speed, rpm	1,800	1,330-1,780
Tower	Flared-steel shell	Flared-steel shell
Cut-in/rated/cut-out at hub height, mph	14/28/45	12/30/60
Rated power, kW	2,500	3,200
Total weight on foundation, lb	630,000	932,000
Annual energy, MWh (14-mph design site)	8,300[a]	10,700[a]

[a]Assumes 90% availability.

Source: Adapted from *Wind Energy Systems,* Draft, U.S. Department of Energy, May 17, 1988.

Technology transfer

Technology transfer activities under the federal wind program include regular communication with industry and other users, cooperative field test programs, innovative research contract awards, national and international conferences and workshops, and published research results. DOE regularly confers with industry members and the scientific and engineering communities through participation in seminars and meetings with such organizations as the American Wind Energy Association (AWEA), American Society of Mechanical Engineers (ASME), the American Solar Energy Society (ASES), the Electric Power Research Institute (EPRI), and the Institute of Electrical and Electronics Engineers (IEEE).

With the steadily increasing use of wind energy abroad, especially in European countries, DOE has actively participated in several international cooperative programs

conducted through the International Energy Agency (IEA). IEA's wind energy research and development efforts are conducted by 13 member countries, including the United States, and result in valuable exchanges of data and ideas.

In FY 1986 and FY 1987, several events helped industry, researchers, and the government to focus on the progress and problems relating to wind turbine research and development. Included is the Small Business Innovative Research Program, which awarded several contracts to qualified wind energy researchers and manufacturers.

Annual budget

The federal Wind Energy Program budget levels for FY 1986 and FY 1987 are shown in Table 2.4-14. The major change in the budget levels between the two years was due to completion of the MOD-5B, 3.2-MW project (transferred to HEI). A major emphasis on blade aerodynamics accounted for some budget growth in FY 1987 in the research program.

Table 2.4-14. Budget for the federal Wind Energy Program
(millions of dollars)

	FY 1986	FY 1987
Atmospheric fluid dynamics	1.1	1.3
Aerodynamics	1.6	4.0
Structural dynamics	3.8	2.4
Advanced concepts	4.5	2.2
Supporting research	1.5	2.2
Multimegawatt systems (MOD-5)	11.5	4.5
Capital equipment	0.8	0.2
Total	24.8	16.8

Source: Adapted from *Wind Energy Systems,* Draft, U.S. Department of Energy, May 17, 1988.

Future research and development role

The federal Wind Energy Program will continue to focus on the basic science of wind-turbine dynamics to explain the nature of the wind, the wind's complex interaction with the wind turbine, and the effects of this interaction on the wind turbine's design. Research on advanced components and systems will focus on such areas as identifying and testing high-performance airfoil concepts designed specifically for wind turbines. Improved control systems supporting variable-speed operation will be investigated.

Applying aerodynamics studies in ways that improve turbine airfoils could double the annual production from wind systems. Improved rotor blades and turbine structures should reduce weight and system complexity and could increase fatigue life by a factor of three or more. The ability to predict wind resources more accurately, especially in complex terrain, can lead to improved wind turbine design and performance efficiency.

The federal Wind Energy Program is designed to take advantage of a strong partnership with industry, whereby industry can ultimately achieve the long-term goal of developing broadly competitive wind machines and self-sustaining R&D capabilities. DOE will continue building a technology base that can be transferred to the wind industry.

2.4.6.8 The EPRI research focus*

EPRI, through ongoing discussions with industry and participation in select workshops, has identified a number of areas where continued support for wind power development in the form of research and information dissemination activities is needed, including:

- wind resources
  - — long-term measurement stations
  - — program to coordinate utility wind measurements
- wind turbine technology
  - — power-electronic controlled variable-speed generation
  - — airfoils
  - — investigation of cyclic loads
- wind power station technology
  - — power-electronic control and protection devices
  - — integrated control and protection schemes
  - — micrositing capabilities
- environmental and institutional
  - — educational activities

Of the above potential research areas, variable rotor speed was deemed to be the most significant fundamental advance possible for wind turbine technology. Because wind power is a highly modular technology, an extensive control and power collection network is needed. Hence, it is desirable to have low-cost, low-power control and protection devices to integrate the turbines into reliable, easily operable, cost-effective wind power stations. Both the turbine and station applications of power electronics are ways of evolving wind power into a technology that is more fully compatible with utility industry needs.

Findings dealing with airfoils, structural codes, and micrositing provide a basis for continued related activity within the federal program.

If wind power usage is to continue to grow and emerge as a *significant generation* option for electric utilities, all sectors involved with wind power development including EPRI, the federal Wind Energy Program, the wind power industry, and the electric utility industry will need to participate and cooperate in providing support. The implications for the EPRI program and those of other sectors are discussed below.

---

*The authors gratefully acknowledge the information provided by the following EPRI staff: Ed Demeo, Frank Goodman, and John Schaefer.

EPRI program

Although the EPRI program should support, either independently or in cooperation with other sectors, programmatic efforts in each of the areas identified above, the primary efforts of the EPRI program should be directed toward **enhancement of the wind turbine and wind power station technologies through application of power electronic devices.** Substantial benefits are possible through development of power-electronic controlled, variable-speed generation and new power-electronic devices for station protection and control. EPRI is unique among the sectors associated with wind power development in having the technical and other resources needed to support and guide the development of such devices for wind power applications and to ensure their compatibility with electric utility systems. Thus, the continuation and expansion of the main program thrust at EPRI is power-electronic applications to wind power. Other activities are being kept at the minimum level necessary to track other wind power research and field experience.

The power-electronic application work is divided into two categories: (1) power-electronic drive circuits for variable-speed generation (turbine application) and (2) integrated control and protection concepts (station application). Each of these areas is briefly discussed below.

Turbine application. For the turbine, the specific goal is to develop low-cost, power-electronic drive circuits that will allow cost-effective variable-speed generation. The research mission is to quantify the benefits and, thereby, establish the basis for the cost and performance targets, evolve the requisite power electronics through suitable laboratory work, and integrate the power electronics with the wind turbine application.

The research to evolve low-cost drives for operation of wind turbines with variable rotor speed has already begun with identification of the requisite drive test and evaluation capabilities. The capabilities will include data acquisition and measurement systems and associated simulation and calibration apparatus. The capabilities will be used in subsequent phases of the program to evaluate current-technology drives and advanced-concept drives.

Variable-speed drives incorporating existing technology will be laboratory tested to quantify the benefits and establish baseline cost and performance goals for advanced concepts. Thereafter, advanced concepts should be evolved and tested and then transferred to industry. To make variable rotor speed sufficiently attractive for widespread use will require advanced drives that take full advantage of the state of the art in power electronics. The evolution of these drives in concert with small hydroelectric and motor applications to the mutual benefit of all these technologies is desirable.

Deliverables to date include two key products available from this activity. They are

- specifications of data acquisition and measurement capabilities to be used in the subsequent program phases and
- definition of current-technology drives and candidate advanced drives for test in the subsequent program phases.

Opportunities to involve utilities and wind turbine manufacturers in the research process are being pursued in parallel with these start-up activities. Utility involvement is desirable from the standpoint of ensuring that the power-electronic technology is compatible with their needs. Additionally, the utility representatives can aid in identifying other applications (such as hydroelectric systems) for various derivative versions of the advanced

power electronics. Wind turbine manufacturer participation is desirable to ensure that the power-electronic technology is wind turbine compatible during the laboratory development phase and to aid in actual turbine application tests in the later technology transfer phase.

Station application. In addition to wind turbine drives, advanced power-electronic concepts are expected to have a variety of other applications in wind power stations and later in other modular technologies such as photovoltaics. Examples of such concepts are integrated, low-cost control and protective devices and static voltage and reactive power (var) controllers. EPRI has already initiated exploratory research in these areas through contracts with wind turbine manufacturers.

This work is aimed at identifying specific apparatuses for EPRI development. The process of evolving advanced power-electronic devices for station protection and control would parallel that described earlier for turbine control. The evolution of these devices would require the same definition, laboratory work, and field-test sequences as the turbine controllers. Again, opportunities for utility cosponsorship are being pursued for the same reasons indicated above.

For both the turbine and station applications of advanced power electronics, opportunities for cosponsorship from the power-electronic industry are being pursued. This industry would provide an essential ingredient, namely, an understanding of where the rapidly changing field of power electronics is going and how the trends affect the application research. To set the stage for dialogue among all parties with a vested interest in advanced wind stations, a preferred wind power station architecture would be developed. Different locations and topologies for the power electronics in the power station would be examined, including the substation, pad-mounted transformers, and wind turbines. The thrust of this activity will be to access the economics and risks associated with variable-speed wind turbine (VSWT) stations. The work will focus on construction and a multiyear program plan including budgetary cost estimates and schedule.

Table 2.4-15 and Fig. 2.4-9 include proposed elements for a five-year joint venture project with utilities, government, manufacturers, and EPRI for a VSWT station.

Economics, benefits, and risks

Cost estimates were made for the mechanical and electrical components, installation and balance of station, and operation and maintenance costs. These costs were obtained and compared for a constant-speed and a variable-speed wind turbine. The selling price for a wind turbine included the mechanical and electrical components; the installation and balance of station costs for the optimized wind turbine would be ~$1000/kW. This cost projection assumes mature production quantities of 1000 units/year, rated 300 kW each. The life cycle cost of energy for both the constant-speed and variable-speed wind turbines for a wind site similar to Altamont Pass are nearly equal and below $0.048/kWh for the constant dollar method. **This cost of energy makes the use of power electronics for variable-speed operation affordable.** The additional benefits of quality power resulting from the use of the power electronics and projected lower prices in the future for the power electronics were not included in this analysis but provide additional reasons for pursuit of variable speed.

The technical risks associated with this approach relate primarily to the reliability of the power electronics and lower their projected productivity. The cost risks are directly proportional to the development time.

Table 2.4-15. Milestones, schedule, and cumulative budgetary cost estimates

Year	Milestone[a]	Date (cum. months)[b]	Budget (cum. $1000s)[b]
1	Start	0	0
	Design specification completed	6	1000
	Design/development of PE subsystem completed	9	1500
	Design of overall VSWT system completed	12	2100
2	Laboratory test of VSWT subsystems completed	21	4600
	Fabrication, shipment of two prototype units completed	24	6100
3	Installation of two VSWT prototype units completed	30	7200
	System checkout tests completed	36	8200
4	Test and evaluation, year 1 completed	48	8700
5	Test and evaluation, year 2 completed	60	9200

[a]PE = power electronics, VSWT = variable-speed wind turbine.
[b]Cum. = cumulative.
Source: Based on data from U.S. Wind Power, Inc., Burlington, Mass., *Utility Variable Speed Wind Turbine Program Plan,* EPRI Contract No. RP2790-3, 1988.

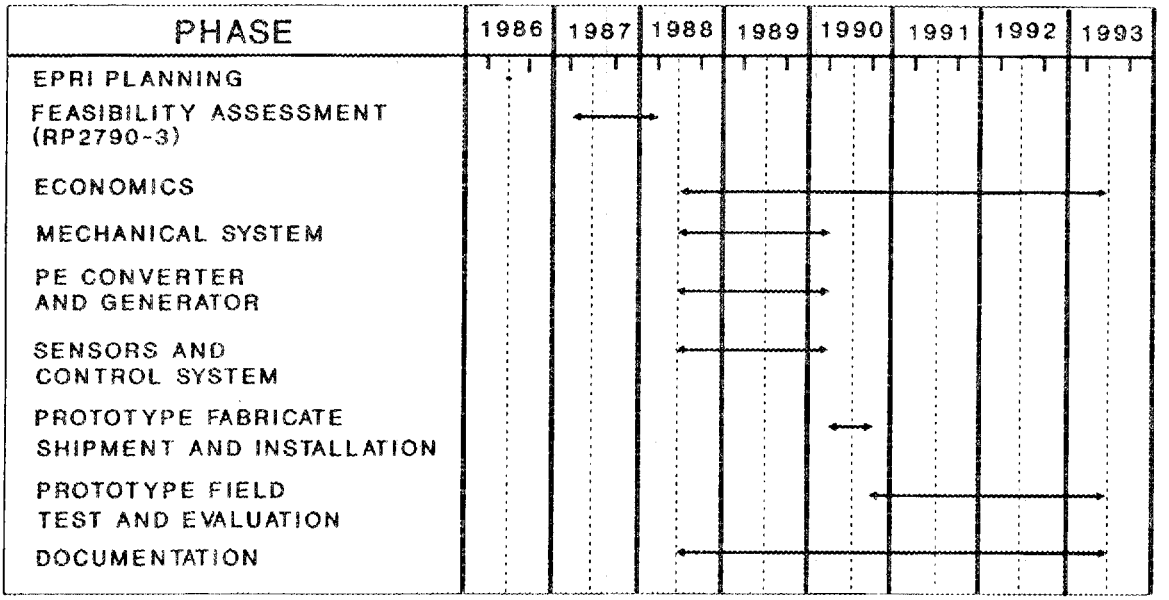

Fig. 2.4-9. Schedule for the development and test of a variable-speed wind turbine. *Source:* Based on data from U.S. Wind Power, Inc., Burlington, Mass., *Utility Variable Speed Wind Turbine Program Plan,* EPRI Contract No. RP2790-3, 1988.

2.4.6.9 The U.S. wind power market

The first turbines with >200-kW rating were installed in 1983 and peaked at 6.2% of all turbines installed in 1985. Turbines in this size range have never contributed to a significant degree to the installed base of turbines in the U.S. wind power industry. However, the largest turbine ever installed in an operating U.S. commercial wind power station, the Boeing MOD-5B, rated at 3200 kW, was installed by Hawaiian Electric Renewable Systems in 1987.

In 1986 and 1987, fifteen manufacturers—foreign and six domestic—supplied turbines to U.S. wind power station developers. The details of the number of turbines installed and their aggregate rating for each manufacturer are shown in Table 2.4-16, according to country of origin. Of the total of 3373 turbines installed in 1986 and 1987, representing 372.5 MW of aggregate rating, only 1293 (38.3%) were supplied by U.S. manufacturers, representing 133.7 MW of aggregate rating (35.9% of the total). This total is in marked contrast to the 1981-85 period, in which 60.8% of the turbines and 60.3% of the aggregate rating were supplied by U.S. manufacturers. Although six U.S. manufacturers supplied turbines to wind power stations in 1986 and 1987, the only manufacturer with significant activity was U.S. Windpower, which supplied 1286 turbines, or 99.5% of all the turbines manufactured in the United States. Although Boeing supplied only a single turbine at a rating of 3200 kW, it accounted for 2.4% of the aggregate rating supplied by U.S. manufacturers.

Among foreign suppliers, Denmark supplied the vast majority of turbines installed, with 58.3% of the turbines and 56.5% of the aggregate rating. The dominant supplier was Micon, followed by Nordtank and Bonus. Vestas was also active but dropped considerably

Table 2.4-16. Aggregate installed wind turbine rating in U.S. wind power stations, 1986-87, by manufacturer and country of origin

Country of origin and manufacturer	Number of turbines		Aggregate name-plate rating (MW)	
United States				
U.S. Windpower	1286		128.6	
Boeing	1		3.2	
Fayette	2		0.5	
Westinghouse	1		0.6	
Carter	1		0.3	
Northern Power System	2		0.2	
Subtotal	1293	(38.3%)	133.4	(35.9%)
Belgium				
HMZ Windmaster	35	(1.0%)	9.5	(2.5%)
Denmark				
Micon	558		58.6	
Nordtank	582		55.2	
Bonus	381		48.7	
Vestas	273		24.4	
Danwin	91		14.6	
Wincon	84		9.1	
Subtotal	1969	(58.3%)	210.6	(56.5%)
Japan				
Mitsubishi	57	(1.7%)	14.3	(3.8%)
United Kingdom				
WEG	19	(0.6%)	4.8	(1.3%)
Total	3373		372.6	

Source: Based on data from Robert Steele, Strategies Unlimited Corp., Mountain View, Calif., private communication dated July 12, 1988.

from its position as the leading Danish supplier in the 1981-85 period. The other supplying countries included Belgium, the United Kingdom, and Japan, which achieved its first entry into the U.S. wind power market in 1987, supplying 57 Mitsubishi 250-kW turbines.

2.4.6.10 References for Section 2.4.6

EPRI (Electric Power Research Institute) 1983a. *Setting Guidelines for Utility Application of Wind Turbines,* Report AP-2795, Palo Alto, Calif.

EPRI (Electric Power Research Institute) 1983b. *Siting Guidelines for Utility Application of Wind Turbines,* Report AP-2795, RP 1520-1, Final Report, Palo Alto, Calif.

EPRI (Electric Power Research Institute) 1986. *Proceedings: Workshop on Prospects and Requirements for Geographic Expansion of Wind Power Usage,* Report AP-4794, Palo Alto, Calif.

McClendon, R. E., and Duncan, R. A. 1985. "Permitting Windfarms in California: Environmental Impacts, Local Regulations, Developer Responsibility," pp. 305-14 in Proc., Windpower '85, SERI/CP 217-2902, Solar Energy Research Institute, Golden, Colo.

Sengupta, D. L., Senior, T. B. A., and Ferris, J. E. 1983a. *Television Interference Measurements Near the MOD-2 Array at Goodnoe Hills, Washington,* STR-211-2086, Solar Energy Research Institute, Golden, Colo.

Sengupta, D. L., Senior, T. B. A. and Ferris, J. E. 1983b. *Study of Television Interference by Small Wind Turbines,* STR-215-1880, Solar Energy Research Institute, Golden, Colo.

Senior, T. B. A., and Sengupta, D. L. 1983. *Large Wind Turbine Siting Handbook: Television Interference Assessment,* STR-215-1879, Solar Energy Research Institute, Golden, Colo.

Shepherd, K. P., and Hubbard, H. H. 1985. "Environmental Noise Considerations for the Siting and Operation of Wind Energy Farms," pp. 299-304 in *Proc. Windpower '85,* SERI/CP 217-2902, Solar Energy Research Institute, Golden, Colo.

Shepherd, K. P., and Hubbard, H. H. 1986. *Prediction of Far Field Noise from Wind Energy Farms,* NASA Contractor Report 177956, National Aeronautics and Space Administration, Langley Research Center.

DOE (U.S. Department of Energy) 1985. *Five Year Research Plan 1985-1990, Wind Energy Technology: Generating Power from the Wind,* DOE/CE-T11.

DOE (U.S. Department of Energy) 1987. *Wind Energy Resource Atlas of the United States,* DOE/CH 10093-4, Solar Technical Information Program, Solar Energy Research Institute, Golden, Colo.

2.4.7. Geothermal Energy *(by H. G. Arnold)*

2.4.7.1 Introduction

Geothermal literally means "earth heat"; for a technical definition, geothermal excludes thermal gradients in water bodies, the atmosphere, and fabricated structures. The inclusion of geothermal with renewable energy sources is debatable because there is no evidence that existing geothermal extraction methods are associated with replenishment of the resource within the lifetime of the production plant. However, one may look into the future and imagine geothermal production that taps into the magma of the earth and would, for all intents and purposes, be renewable as long as the extraction rate neither exceeded the contribution of natural radioactive decay to geothermal heat nor otherwise appreciably cooled the general vicinity of the extraction point.

The temperature of the earth increases as a function of the depth to which it is penetrated. For practical reasons, the thermal gradient with depth must exceed some limit to be of use in energy production or heat recovery. Depending upon the magnitude of the thermal gradient, geothermal energy is said to exist at certain places throughout the world, generally when it exceeds some useful temperature within the depth of current drilling technology. Low-temperature geothermal energy is distinguished from other geothermal energy by the magnitude of the thermal gradient and serves as a category of geothermal energy based solely on temperature.

Other categorizations of geothermal energy are generally applied to the temperature of the extracted resource and to the form of heat-extraction medium present rather than the thermal gradient of the hole by which it is accessed. Four categories are conventionally accepted: (1) hydrothermal, (2) geopressured, (3) hot dry rock, and (4) magma. Generally speaking, the low-temperature resource may be either hydrothermal or dry and extends from some temperature suitably above ambient heat sinks up to the boiling point of water at the altitude where the land surface of the geothermal facility resides. The high-temperature resource is generally defined by a minimum resource temperature that will produce medium-pressure steam at the inlet of a steam turbine, a temperature which varies depending upon the mix of steam and liquid in the underground fluid. Somewhere near the temperature of molten rock, the categorization of the magma resource begins.

The hydrothermal resources are cross categorized by the percentage of liquid water in the product at the depth of the access hole. The most visible and well known resource is the dry steam resource that exists in the ground within drillable depths as dry saturated steam with essentially no liquid. Dry steam is also the least geographically distributed resource around the world, existing at only three places in the western United States, two of which are protected as national parks.

The next most abundant of hydrothermal resources is the hot water resource, which is more generally located throughout the western and Gulf Coast regions of the United States as well as other places in the world. The hot dry rock resource with no hydrothermal fluid present is potentially the most abundant. It is about the same temperature as the hot water and occurs throughout the western United States within the depths of current drilling technology. It must have a heat-transfer medium introduced for effective heat recovery.

The magma resource is confined by current technology to active volcanic regions and to date has been of minimal interest except as a research field, although some interest and experiments have occurred in Japan and Hawaii. The low-temperature resource is predominantly found in the eastern United States and generally follows the distribution of

hot spring spas that sprang up during the late nineteenth and early twentieth centuries. The magma resource is beset with technical problems because of its high temperatures and hostile production environment, while the low-temperature resource has a low economic return potential because of its low-grade heat and high development costs compared with waste heat sources.

The convenience of virtually clean steam created by natural processes has made the dry steam resource the most readily developed and the most avidly sought of the geothermal forms in the world today; one merely has to place a centrifugal separator between the well and the turbine to produce usable steam. Unfortunately, to protect the locally sensitive environment, one must also control the venting of hydrogen sulfide and other gases, trap metals such as boron and mercury, and dispose of the condensed effluent—all of which require relatively complicated and expensive equipment and controls.

The dry steam resource is currently known to exist at two legally exploitable locations in the world—northern California and Italy. The long-term potential for developing this form of geothermal energy is thus tied to any change in or ability to change its known occurrence around the world. The limited distribution of this form of the resource is a fact of nature and is not likely to be affected by technologies other than those tied to exploration. Unfortunately, if one can drill much deeper the resource turns into hot water. In short, dry steam is a rather limited energy source, except for the fortunate developers near San Francisco and Larderello, until it is unexpectedly located elsewhere or until turbines are installed in Mount Lassen or Yellowstone parks.

The entire perception of geothermal energy could change if research and exploration combined to reveal an as-yet-unidentified resource form, such as naturally occurring supercritical steam (i.e., steam that would not form liquid regardless of its depth). Current belief is that temperatures that high are not likely to exist at depths to which water has penetrated except around shallow magma, in which case the steam has long ago percolated away. But such conclusions would be subject to reexamination should the proper observations be made.

The hot water resource has been developed to a small degree in the United States and to a greater extent in Mexico, Central America, New Zealand, Japan, and Iceland. The reason for the delayed development of this resource in the United States is a combination of its close proximity to the clean dry steam fields and the impurity of the liquid. The solids content of the liquid in Southern California, where it is the most accessible, runs as high as 30%, whereas the hot water at other developments around the world is somewhat purer—generally less than 3% solids.

Experimental ventures have attempted to recover the hot dry rock resource, principally at Los Alamos National Laboratory with DOE funding. The results of these experiments are that the resource can be recovered by circulating water through artificially fractured rock at depth, but the extrapolation of these results to reservoir development methodologies and well life for viable commercial production ventures is still considered to have higher risk than hydrothermal well field development.

The magma resource is dependent largely on materials compatibility and durability, although the relatively high risk locations tend to discourage investment of large amounts of money. The low-temperature resource, averaging about 120°F, is awaiting the same developments that other low-grade heat technologies are awaiting, namely more efficient cycles, fortuitous locations, and changing economic parity with higher density heat sources, except for a few isolated spas and heating projects.

A further variation of the hydrothermal resource results when the downhole pressure of the hot water greatly exceeds the hydrostatic head for the depth of penetration. This variation is the geopressured resource, found mostly along the Gulf Coast. A significant factor in the geopressured resource development is the current conclusion that almost all of the fluid reservoirs contain methane gas, perhaps as much as 60 ft^3/bbl of hot water. Results of the DOE Wells of Opportunity flow tests indicate that commercially attractive amounts of methane may be extractable from some previously abandoned gas and oil wells, but no estimate is indicated of how many of some 1200 wells penetrating the geopressured region may contain sufficient amounts of methane.

2.4.7.2 Resource base

The current amount of electrical production in the United States from geothermal energy is about 2000 MW(e) from steam and about 200 MW(e) from hot water. Additional smaller amounts of energy are in use in direct-heat applications. The potential resource base for geothermal energy is huge, often measured in equivalent numbers of Alaskan oil fields; however, the recoverable base is only a small percentage of the total under current economic and technological conditions. Part of the economic deterrent is technological and concerns corrosion, energy conversion cycle efficiency, and reservoir exploration uncertainties. The other part concerns location because a sizeable portion of the resource is remote from energy markets and involves large distribution costs.

The estimated gross amount of hydrothermal resource above 150°C is 4,800 quads (49 billion bbl of oil), of which slightly more than 1% can be recovered (48 quads) at an estimated cost of $0.05 to $0.07/kWh. The low-temperature resources (lower than 150°C) may amount to 40,000 quads, but less than 1% is recoverable and the low grade of the heat makes the economics of recovery questionable for all but a small part of that percentage, and certainly there will be little or no electrical generation at this temperature. There may be 5,800 quads of geopressured heat of which 164 quads are recoverable, and 3,200 quads of geopressured methane of which 102 quads are recoverable at an estimated cost of $5.00 per thousand cubic feet. There are approximately 1,200 producing oil and gas wells penetrating the geopressured zone that may be potential wells of opportunity for recompletion, but no estimate is available regarding how many may produce as much as 60 ft^3/bbl of fluid, whereas a production of 150 to 200 ft^3/bbl would be required for current economic viability. The hot dry rock resource is estimated at 650,000 quads, of which 65 quads or less may be recoverable at an optimistic cost of about $0.07 per kWh, depending upon the ability to predict well life.

During the 1970s, the geothermal resource and its exploration and extraction technologies were researched heavily by the federal government, a few enterprising oil and drilling companies, and independent corporations formed expressly for the promotion or development of geothermal energy. Although formal documentation is not available to support the conclusion, conversations at geothermal meetings would have led many observers to conclude that few of the principals expected to get rich from geothermal development. Research and resource development continued at a reduced pace into the 1980s, but the real gains from the effort were smaller than those originally expected.

Materials and corrosion research was expected to lead to economic recovery of the highly saline solutions in the Imperial (California) valley, with published estimates running as high as 50,000 MW(e), but the uncertainties of effluent disposal in the agricultural valley combined with the costs of resource exploration and well drilling tended to overshadow the

modest advances in corrosion research. Much research was directed also to the treatment of gaseous effluents, energy cycles, downhole sensing devices, novel drill bits, plasma rock cutters, aerial sensing, well logging, hydrological surveys, and geochemical analyses.

From the above-mentioned recent experience, it may be concluded that the areas for needed research and development are well known if the geothermal resource is to be exploited to a significant portion of its potential. Regardless of the potentially large resource base, the major conclusion of the current knowledge about geothermal energy is that it is of only regional significance with existing technology. The minable energy content is roughly equivalent to the expected expansion rate of individual energy markets within reasonable distribution distances of the resource. As a further complication, the occurrence of geothermal resources is tied to geological features that city founders have tended to avoid—seemingly in direct proportion to the temperature of the geothermal resource.

2.4.7.3 Potential research areas for geothermal development

The research areas for geothermal development may be loosely grouped around the requirements for exploration, production, and usage. The single most important factor limiting geothermal development that all types of geothermal resources hold in common is the uncertainty of the specific location of known amounts of energy. Thermal maps from geologic surveys and oil or water drilling logs may indicate general isotherms over large areas, but the detailed hydrogeologic knowledge of the actual reservoir, its extent, and its flow characteristics require expensive and time-consuming exploration and well testing methods. Thus, for a geothermal resource to be used for energy production, there must be an investment in the determination of firm reserves for a given capacity of energy production and for a given facility life based on a resource depletion schedule.

Similar exploration uncertainties exist for oil and gas reserves; however, the production energy per successful well for hydrocarbons is several orders of magnitude greater than for geothermal, while the cost per geothermal well is about the same as that for the oil or gas well. Thus, the investment risk for finding geothermal resources is greater than that for more conventional energy sources, making the determination of firm capacity a serious impediment to geothermal development. Any research that will facilitate or decrease the cost of resource exploration will speed the development of geothermal energy.

A significant environmental factor in the use of most forms of geothermal energy is the problem of effluent disposal. Because the heat content of hot water is so much lower than that of steam, about 80% of the fluid production (mass rate) must be disposed of during plant operation compared with about 20% for dry steam. In the United States, the effluent is generally reinjected into depleted wells to protect the surface environment and to alleviate any potential for land subsidence as a result of fluid withdrawal. If the plant effluent is injected, the expense of keeping injection wells open and available must be met; if there is no injection, the cost of treatment and surface discharge must be borne. Research into better methods of disposal and environmental consequences of returning or not returning the fluid to the reservoir is important to the economic factors influencing the growth of the resource.

The most famous characteristic of geothermal energy, besides steam plumes rising from wellhead vents, may be the odor of the fluid. Most liquid and steam resources have a measurable concentration of hydrogen sulfide. Upon flashing of the fluid at the surface, the hydrogen sulfide must be prevented from entering the atmosphere for environmental protection and aesthetic reasons. In addition, the cooling towers of open-cycle and some

closed-cycle energy recovery operations release water droplets into the atmosphere that may contain heavy metals and salts. In short, the thermal cycle of geothermal plants can be fairly dirty and detrimental to the immediate environment and nearby human inhabitants. The cost of containing and controlling these releases is a significant impediment to geothermal development and a fruitful area for research payoffs. (It is quite likely that the hot dry rock resource will experience many of the same environmental problems that the hot water resource experiences when water is circulated through the rock, especially heavy metal and salt deposition.)

Finally, there is the difficulty of extracting the resource from the reservoir. Not only is the geothermal energy usually found at depth, usually greater than 8000 ft, but the high temperature and corrosiveness of the resource place severe loads on sensing, drilling, and extraction equipment. In addition, it is not uncommon for geothermal resources to occur in highly fractured geologic formations. Drilling in fractured formations can often require the use of cement to seal the hole as the drill penetrates the rock. The inability of the driller to seal the fractures can result in a high likelihood for reservoir depletion upon penetration or environmental damage to other underground or surface fluids by connectivity through the fracture system. Research into drilling or alternative technologies for mining the resource is essential to the long-term, full-scale development of the resource.

Possibly, the most promising area of new research is into the recovery of magmatic heat from deep within the earth. To date, the magmatic resource research has concentrated on surface manifestations near active volcanoes. The problems encountered there are a microcosm of the problems of deep-earth penetration and energy recovery. However, if there is to be any significant production of geothermal energy, especially projecting 50 years into the future, a research program for evaluating this almost inexhaustible, high-density resource should be devised.

In general, the research areas mentioned above are not new and in fact are those begun in the 1970s. The low potential yield of the resource is perhaps an inhibiting factor in funding extensive research. Promoters in the past **grossly overstated** (author's emphasis) the recoverable resource potential and failed to remind funders of the distribution problem associated with the usable resource. The result was disillusionment, but there was some enhanced development in the Imperial Valley and a speed up of development at the Geysers that delayed the impact of a troubled nuclear program in California. Future research should be based on a coherent goal for the development of the resource. Should the resource be pursued on a regional or a national basis, on near-term exploration and conversion technologies, on midterm materials and drilling technologies, or on even longer term mining and conversion research? Should the research into environmental consequences center on long-term heat mining or short-term hole drilling? The lack of such a focus could well lead to piecemeal research funding of demonstration projects and risk ventures as opposed to providing the basis for developing a viable energy resource in the future.

The real question is whether the probable return of 5,000 to 10,000 MW of energy from dirty water in about ten years will stimulate enough interest to fund methods for exploiting a higher percentage of the potential resource base and a long-term look at a truly inexhaustible resource in the deep mantle.

2.4.7.4 Geothermal research summary

The most obvious question about geothermal energy is its potential for generating significant amounts of energy. Most estimates of the resource base generally are gross assumptions based on the amount of energy in large volumes of the earth, then adjusted by some small percentage to reflect the recoverable energy. A significant contribution to the setting of research priorities would be to systematically estimate the recoverable amount of energy under differing development scenarios—environmental protection, cycle efficiencies, distribution costs, drilling and exploration advances, and improved reservoir capacity confirmation. If large volumes of energy are claimed to exist within 3 km of the surface, it would be of interest to know how useful it might be.

In support of the above estimates, extension of previous research into exploration and drilling practices would be of immediate- and long-term benefit to mining the recoverable resource. A significant cost of geothermal development is the uncertainty of the reservoir capacity and production life.

For the long term, research into the technology required for mining the deep-earth heat would be of use in determining the ultimate potential of geothermal energy. This research would initially concentrate on theoretical investigations of resource mapping, mining, and conversion technologies.

Finally, renewal and expansion of past efforts to supply one or more research facilities with representative geothermal fluids for use by system and component researchers would be of long-term benefit to the improvement of geothermal energy cycle and materials development. While research funding of specific projects can lead to the solution of specific problems, it requires a knowledge of where the technology is headed and concentrates on relatively small aspects of the total development picture. The more generalized availability of research facilities can encourage innovative solutions to current and future problems and permit input from small as well as large participant organizations.

2.4.7.5 Bibliography for Section 2.4.7

J. Haraden, "An Economic Appraisal of Magma Power Generation," *Energy* 13, 615-18, 1988.

U.S. Department of Energy, *Geothermal Progress Monitor,* DOE/CE-0196, Issue 10, Geothermal Technology Division, 1987.

U.S. Department of Energy/EG&G Idaho, Inc., *Geopressured-Geothermal Program—Annual Operating Plan,* 1987.

J. T. Whetten et al., "Advanced Geothermal Technologies," pp. 330-45 in *Proc. Energy Technol. Conf., Feb. 17-19, 1988, Washington, D.C.,* Government Institutes, Inc., Rockville, Md., 1988

2.4.8 Ocean Thermal Energy Conversion *(by Fang Chen)*

2.4.8.1 Introduction

The National Energy Policy intends to foster the development of a technology base for systems and products that will reduce the consumption of premium fossil fuels and will allow for increasing the use of renewable resources. An additional policy consideration that is likely to gain further recognition of its importance in the near future is the need to

reduce the emissions of CO_2 and other gases that lead to global warming (i.e., the "greenhouse effect").

Electric power generation accounts for almost one-fourth of the primary energy consumption in the United States (28 quads in 1987), with the majority of the electricity generated from nuclear power or fossil fuels. These conventional power-generating systems have associated environmental effects (e.g., radioactive waste disposal from nuclear power plants and CO_2 emission and acid rain effects from fossil-fueled plants).

Electricity is needed to sustain the nation's economic growth and to maintain and improve the living standards of the people. To protect the environment in the meantime, however, fundamental changes may be required in power generation and in industry (as compared with current practice), such as the increased use of renewables. One of the renewable technology options showing the most promise for continuous and large-scale power generation is that of ocean thermal energy conversion (OTEC).

The tropical oceans are the world's largest solar collector and thermal energy storage system. Incoming solar energy creates a seawater temperature difference on the order of 20°C between the upper and lower parts of the tropical oceans. An OTEC power system uses this temperature difference to generate electricity. Obviously, the ocean thermal resource is vast. If only 1% of this resource were used daily, the electricity produced would be 2×10^8 MW. By comparison, the total U.S. installed electricity generating capacity in 1986 was 7.1×10^5 MW (U.S. Bureau of the Census 1987). In addition to power, OTEC systems can yield other possible benefits such as a freshwater supply and protein production. Both analyses and experience with operating demonstration systems indicate that OTEC can produce continuous reliable electric power comparable to that of conventional practice with little environmental impact. For every megawatt of power generated by an OTEC plant, 1400 m^3/d of freshwater can be produced. The nutrient-rich cold effluent can be used for mariculture, and the potential protein-yield benefit of this use has been projected in terms of annual shellfish production at 1700 tons/ha·MW (Roels 1980).

OTEC power systems can have several variations that include closed-, open-, lift-, and hybrid-cycle systems. In a closed-cycle OTEC system, a working fluid such as ammonia is used to run a vapor turbine for power generation. In an open cycle, warm seawater flashed into steam in a partial vacuum chamber will be the working fluid to run a steam turbine; freshwater will be a by-product of this system if a surface condenser is used. In a lift cycle, warm seawater is the working fluid, which enters at the bottom of a tall, partial-vacuum vessel; a small fraction of the seawater is flashed into steam, which entrains and carries the remaining part of the seawater to the top of the vessel, where the seawater is collected and run through a hydraulic turbine for power generation. A hybrid-cycle power system is a combination of the seawater flashing process (in an open cycle) and a closed-cycle power system for the purpose of producing the by-product of freshwater (in a closed OTEC power system). OTEC power plants can be shore based or ocean based. In either case, cold seawater in the depth of 800 to 1000 m is needed to be pumped to the plants through cold water pipes. An OTEC cold water pipe will be large in diameter and long and will be subject to the ever-changing ocean environment, which makes cold water pipe one of the many OTEC technology challenges.

Since the early 1970s, the U.S. government has sponsored OTEC R&D that includes power systems development, component technology, ocean system, cold-water pipes, biofouling and corrosion, power transmission, economics, and environmental studies. The initial effort focused on closed-cycle power systems. Many components and subsystems have been tested, and many technology achievements have been made. Among them are the

50-kW, Mini-OTEC experiment in Hawaii that demonstrated net power output of 15 kW, and the OTEC-1 tests that proved the efficient operation of large heat exchangers in an ocean environment with insignificant biofouling degradation under a simple, environmentally acceptable (trickle chlorination) maintenance procedure (personal communication dated March 23, 1989, from C. C. Castellano to Fang Chen). As far as the closed OTEC power cycle is concerned, no major technology hurdles are foreseen, and its environmental effect is more favorable than that of a conventional technology.

OTEC has to deal with a diffused energy resource, which is a common attribute to many renewables. For power generation using a diffused resource (a temperature difference of 20°C) as in OTEC, plant economics is the issue (IEEE 1986). The technology seems to be ready for shore-based, closed- or hybrid-cycle power systems (personal communication dated March 28, 1989, from C. Wu to Fang Chen). The cost of such a plant is probably twice as expensive as a comparable fossil-fueled plant (Gritton et al. 1980). For open-cycle systems, the low-pressure steam turbine is a critical technology that needs to be demonstrated. For lift cycles, the fundamental lifting phenomenon is not well understood as yet.

2.4.8.2 Summary

In summary, OTEC uses renewable solar energy as the fuel, it does not use fossil fuels for power generation, and the ocean thermal resource is essentially inexhaustible. Because the world ocean is a CO_2 sink, the pumping of the cold seawater to the surface by an OTEC plant will release some of the dissolved CO_2 to the atmosphere. However, the "greenhouse effect" of an OTEC plant is a factor of 3 to 4 times smaller than that for a comparable fossil-fueled power plant (W. H. Avery and C. Wu, *Ocean Thermal Energy Conversion,* to be published). Although cost reduction on capital-intensive components (such as heat exchangers) of the power system is an area that demands constant attention, a successful demonstration of a prototype OTEC plant from a total resources usage approach is needed. That is, the plant benefits should demonstrate not only power generation but also freshwater production, protein yield, and savings in environmental mitigation. To this end, the OTEC research priorities are as follows.

1. develop critical open-cycle technology—low-pressure steam turbine;
2. validate open-cycle technology through subscale component testing;
3. conduct preliminary design analyses and cost comparison between open- and hybrid-cycle systems;
4. design a proof-of-concept, shore-based OTEC power system;
5. select a meaningful shore-based site capable of realizing the benefits of power, freshwater, or protein yield and of maximizing the benefit-to-cost ratio;
6. build and demonstrate a prototype plant on the selected site, with private cost sharing if possible;
7. conduct a technology-based R&D program for further plant cost reduction and advanced concepts;
8. develop ocean system technology for floating OTEC plants;
9. develop ocean-based, combined OTEC and energy-intensive material production technologies; and
10. develop an ocean-based, integrated OTEC artificial island cosmos.

2.4.8.3 References for Section 2.4.8

Gritton, E. C., et al. 1980. *A Quantitative Evaluation of Closed-Cycle Ocean Thermal Energy Conversion (OTEC) Technology in Central Station Applications,* R-2595-DOE, U.S. Department of Energy.

IEEE (Institute of Electrical and Electronics Engineers, Inc.) 1986. *Ocean Thermal Energy Conversion in the United States,* IEEE Position Paper, Energy Committee.

Roels, O. A. 1980. *Food, Energy, and Fresh Water from the Deep Sea,* Mechanical Engineering.

U.S. Bureau of the Census 1987. *Statistical Abstract of the United States: 1987,* 107th ed.

INTERNAL DISTRIBUTION

1. B. R. Appleton
2. B. G. Ashdown
3. S. I. Auerbach
4. C. Bamberger
5. D. E. Bartine
6. V. Baxter
7. L. A. Berry
8. T. M. Bessmann
9. T. J. Blasing
10. R. Booth
11. J. M. Bownds
12. R. B. Braid
13. M. A. Brown
14. W. D. Burch
15. B. L. Bush
16. R. S. Carlsmith
17. P. T. Carlson
18. S. A. Carnes
19. F. C. Chen
20. J. Christian
21. G. E. Courville
22. A. G. Croff
23. F. A. Creswick
24. S. J. Dale
25. P. F. Daugherty
26. R. C. DeVault
27. T. L. Donaldson
28. B. G. Eads
29. A. Ekkebus
30. J. R. Engel
31. M. P. Farrell
32. C. Forsberg
33. E. C. Fox

34-133. W. Fulkerson

134. R. K. Genung
135. P. S. Gillis
136. D. L. Greene
137. W. L. Griffith
138. D. S. Griffith
139. R. K. Gryder
140. G. R. Hadder
141. C. W. Hagan
142. K. Hake
143. J. R. Hightower
144. S. G. Hildebrand
145. E. L. Hillsmann
146. F. J. Homan
147. R. B. Honea
148. R. S. Holcomb
149. P. Hu
150. P. Hughes
151. R. L. Jolley
152. D. W. Jones
153. J. E. Jones, Jr.
154. R. R. Judkins
155. L. Jung
156. M. A. Karnitz
157. M. Katzman
158. S. V. Kaye
159. C. R. Kerley
160. J. O. Kolb
161. M. A. Kuliasha
162. E. H. Krieg, Jr.
163. D. D. Lee
164. D. W. Lee
165. R. M. Lee
166. S. Y. Lee
167. J. M. MacDonald
168. F. C. Maienschein
169. G. Marland
170. B. W. McConnell
171. D. W. McDonald
172. H. A. McLain
173. R. B. McLean
174. D. L. McElroy
175. V. C. Mei
176. J. T. Miller
177. R. L. Miller
178. W. A. Miller
179. W. R. Mixon
180. N. P. Norton
181. M. Olszewski
182. C. J. Penland
183. R. D. Perlack

184. A. M. Perry
185. B. E. Peterson
186. C. Petrich
187. M. L. Poutsma
188. D. J. Pruett
189. S. Purucker
190. S. Rayner
191. J. H. Reed
192. D. E. Reichle
193. D. Reister
194. T. E. Rhea
195. L. W. Rickert
196. C. G. Rizy
197. T. W. Robinson, Jr.
198. T. H. Row
199. M. Russell
200. A. C. Schaffhauser
201. T. R. Sharp
202. J. Sheffield
203. R. B. Shelton
204. S. P. N. Singh
205. D. J. Slaughter
206. J. H. Sorensen
207. S. Stevens
208. G. G. Stevenson
209. J. O. Stiegler
210. S. H. Stow
211. P. M. Tarrant
212. J. J. Tomlinson
213. D. B. Trauger
214. A. Turhollow
215. R. E. Uhrig
216. D. B. Waddle
217. J. R. Weir
218. T. J. Wilbanks
219. K. E. Wilkes
220. A. Zaltash
221. K. H. Zimmerman
222. A. Zucker
223. ORNL Patent Office
224. Central Research Library
225. Document Reference Section
226-228. Laboratory Records
229. Laboratory Records (Record Copy)

EXTERNAL DISTRIBUTION

230. J. G. Asbury, Argonne National Laboratory, 9700 South Cass Avenue, Argonne, IL 60439
231. P. L. Auer, Cornell University, Upson Hall, Ithaca, NY 14853-7501
232. J. Barkenbus, Energy, Environment and Resources Center, The University of Tennessee, 327 South Stadium Hall, Knoxville, TN 37996-0710
233. D. J. Beecy, U.S. Department of Energy, Office of Technical Coordination, FE-14, 19901 Germantown Road, Germantown, MD 20545
234. P. D. Blair, Manager, Energy and Materials, U.S. Congress, Office of Technology Assessment, Washington, DC 20510
235. William R. Boyle, Vice President, Oak Ridge Associated Universities, E/ES Division, P.O. Box 117, Oak Ridge, TN 37831-0117
236. D. Brenkley, British Coal Corporation, HQ Technical Department, Ashby Road, Stanhope Bretby, nr., Burton-on-Trent, Staffs, DE15 OQD, England
237. B. Buchanan, Computer Science Department, University of Pittsburgh, 206 Mineral Industries Building, Pittsburgh, PA 15260
238. D. Budansky, Department of Physics, FM-15, University of Washington, Seattle, WA 98115
239. E. J. Cairns, Lawrence Berkeley National Laboratory, 1 Cyclotron Road, Building 90, Room 3030, Berkeley, CA 94720

240. C. L Carwile, U.S. Department of Energy, CE-33, 1000 Independence Avenue, SW, Room 5H-021, Washington, DC 20585
241. K. D. Chapatwala, Selma University, 1501 Lapsley Street, Selma, AL, 36701
242. B. L. Cohen, University of Pittsburgh, Physics Department, Pittsburgh, PA 15260
243. R. Cohen, Energy Engineering Board, National Academy of Sciences, 2101 Constitution Avenue, Washington, DC 20418
244. W. Colglazier, The University of Tennessee, 327 South Stadium Hall, Knoxville, TN 37996-0710
245. T. C. Collins, The University of Tennessee, 404 Andy Holt Tower, Knoxville, TN 37996
246. A. Crane, U.S. Congress, Office of Technology Assessment, Fourth Floor, 600 Pennsylvania Avenue, SE, Washington, DC 20510-8025
247. F. L. Culler, President Emeritus, Electric Power Research Institute, P.O. Box 10412, Palo Alto, CA 94303
248. J. J. Cuttica, Vice President, End Use Research and Development, Gas Research Institute, 8600 West Bryn Mawr Avenue, Chicago, IL 60631
249. J. Darmstadter, Resources for the Future, 1616 P Street, NW, Washington, DC 20036
250. R. J. Dowling, Office of Fusion Energy, ER-53, U.S. Department of Energy, Washington, DC 20545
251. D. A. Dreyfus, Gas Research Institute, 1331 Pennsylvania Avenue, NW, Suite 730-North, Washington, DC 20004
252. V. L. Dugan, 6200, P.O. Box 5800, Albuquerque, NM 87185
253. B. D. Dwyer, Energy Information Administration, 1000 Independence Avenue, NW, E1-20, Washington, DC 20585
254. W. H. Ellis, University of Florida, Department of Nuclear Engineering, 204NSC, Gainesville, FL 32611
255. Exxon Company, U.S.A., Downstream Resource Center, 800 Bell Street, Room 2861B, Houston, TX 77002
256. R. J. Ferraro, Electric Power Research Institute, 10521 Research Drive, Suite 400, Knoxville, TN 37932
257. F. T. Finch, Los Alamos National Laboratory, P.O. Box 1663, MS A103, Los Alamos, NM 87545
258. J. S. Finucane, U.S. Department of Energy, E1-532, Room BG-057, Washington, DC 20585
259. E. Fleischman, Idaho National Engineering Laboratory, P.O. Box 1625, Idaho Falls, ID 83415-3525
260. R. L. Folstein, Office of Oil, Gas, Shale, and Special Technologies, FE-30, U.S. Department of Energy, Washington, DC 20545
261. E. C. Freeman, U.S. Department of Energy, CE-133, 1000 Independence Avenue, SW, Washington, DC 20585
262. K. M. Friedman, U.S. Department of Energy, CE-10, Washington, DC 20585
263. J. H. Gibbons, Director, Office of Technology Assessment, U.S. Congress, Fifth Floor, 600 Pennsylvania Avenue, SE, Washington, DC 20510-8025
264. H. Glasser, Department of Applied Science, University of California, Davis, CA 95616

265. M. Greuss, Royal Institute of International Affairs, 10 St. James Square, London SWIY 4LF, United Kingdom
266. W. A. Gross, University of New Mexico, Mechanical Engineering Department, Room 202, Albuquerque, NM 87131
267. M. Heggelund, Canadian Energy Research Institute, 3512 33 Street, NW, Calgary, Alberta, Canada, T2L2A6
268. W. G. Herrold, Meridian Corporation, 4300 King Street, Alexandria, VA 22302-1508
269. R. Holt, U.S. Department of Energy, PE-10, 1000 Independence Avenue, SW, Washington, DC 20585
270. G. L. Houze, Allegheny Ludlum Corporation, Technical Center, Brackenridge, PA 15014
271. A. F. Iglar, East Tennessee State University, P.O. Box 24449, Johnson City, TN 37614
272. H. Jaffe, U.S. Department of Energy, Office of International Affairs, 1000 Independence Avenue, SW, Washington, DC 20585
273. D. J. Jhirad, Office of Energy, Bureau of Science & Technology, U.S. Agency for International Development, Room 508, SA-18, Washington, DC 20523
274. G. J. Jones, Division 6223, Pholtvoltaic Systems Research, Sandia National Laboratories, Albuquerque, NM 87185-5800
275. G. Y. Jordy, ER-30, U.S. Department of Energy, Washington, DC 20545
276. T. Kapus, U.S. Department of Energy, Office of Buildings & Community Systems, 1000 Independence Avenue, SW, Washington, DC 20585
277. M. Kerrigan, U.S. Department of Energy, 1000 Independence Avenue, SW, Room 7B-084, Washington, DC 20585
278. W. C. Kilgore, U.S. Department of Energy, Energy Information Administration, 1000 Independence Avenue, SW, Room 1H-053, Washington, DC 20585
279. M. Krebs, Lawrence Berkeley National Laboratory, 1 Cyclotron Road, Building 50A/4112, Berkeley, CA 94720
280. J. Laurmann, University of California, 3372 Martin Rd., Carmel, CA 93923
281. M. Ledbetter, ACEEE, 1001 Connecticut Avenue, NW, Suite 535, Washington, DC 20036
282. M. D. Levine, Lawrence Berkeley National Laboratory, 1 Cyclotron Road, 90-3125, Berkeley, CA 94720
283. W. J. McLean, Sandia National Laboratories, Dept. 8360, Livermore, CA 94550-0969
284. A. F. Meyer, Jr., A. F. Meyer & Associates, Inc., 6845 Elm Street, Suite 700, McLean, VA 22101
285. M. Miller, Massachusetts Institute of Technology, Department of Nuclear Engineering, Building 24-109, Cambridge, MA 02139
286. J. P. Millhone, Director, Office of Buildings and Community Systems, U.S. Department of Energy, Room 5E-080, 1000 Independence Avenue, SW, Washington, DC 20585
287. D. E. Morrison, Professor of Sociology, Michigan State University, 201 Berkey Hall, East Lansing, MI 48824-1111
288. H. A. Mueller, Electric Power Research Institute, 3412 Hillview Avenue, Palo Alto, CA 94303

289. E. Nye, President, TU Electric Company, 2001 Bryan Tower, Dallas, TX 75201
290. P. Patterson, CE-15, U.S. Department of Energy, Washington, DC 20585
291. J. D. Pearson, EI-62, U.S. Department of Energy, 1000 Independence Avenue, SW, Room 1H-050, Washington, DC 20585
292. T. K. Perkins, Arco Oil & Gas, 2300 West Plano Parkway, Plano, TX 75075
293. R. L. Perrine, Civil Engineering Dept., University of California, Engineering Bldg. I., Room 2066, Los Angeles, CA 90024-1593
294. R. L. Phen, Jet Propulsion Laboratory, 4800 Oak Grove Drive, Pasadena, CA 91109
295. G. D. Pine, Gas Research Institute, 8600 West Bryn Mawr Avenue, Chicago, IL 60631
296. S. Plotkin, Office of Technology Assessment, U.S. Congress, 600 Pennsylvania Avenue, SE, Washington, DC 20510
297. R. H. Pry, International Institute of Applied Systems Analysis, A-2361 Laxenburg, Austria
298. J. T. Ratchford, American Association for the Advancement of Science, 1333 H Street, NW, Washington, DC 20005
299. R. N. Schock, Lawrence Livermore National Laboratory, P.O. Box 808, MS-L-209, Livermore, CA 94550
300. E. G. Schwartz, College of Engineering, University of South Carolina, Columbia, SC 29205
301. D. Shanhle, Battelle Pacific Northwest Laboratories, P.O. Box 999, K6-54, Richland, WA 99352
302. J. A. Smith, CE-131, U.S. Department of Energy, 1000 Independence Avenue, SW, Washington, DC 20585
303. R. H. Socolow, Princeton University, Center for Energy & Environmental Studies, H102 Engineering Quad., P.O. Box 5263, Princeton, NJ 08544-5263
304. C. A. Sparrow, Mechanical & Nuclear Engineering, Mississippi State University, P.O. Drawer NE, Mississippi State, MS 39762
305. V. Stagliano, Office of Policy, Planning & Analysis, U.S. Department of Energy, 1000 Independence Avenue, SW, Washington, DC 20585
306. A. Streb, CE-10, U.S. Department of Energy, Washington, DC 20585
307. D. A. Swann, GE-SDED, 1 River Road, Building 2-600, Schenectady, NY 12345
308. D. F. Swink, FE-4, U.S. Department of Energy, 1000 Independence Avenue, SW, Washington, DC 20585
309. J. W. Tester, Massachusetts Institute of Technology, Energy Laboratory, 77 Massachusetts Avenue, Room E-40-455, Cambridge, MA 02139
310. Lt. Col. R. F. Tuttle, U.S. Air Force, AFIT/ENP, Wright-Patterson AFB, OH 45433-6583
311. J. Van De Vate, International Institute for Applied System Analysis, A-2361 Laxenburg, Austria
312. F. M. Wells, Automated Sciences Group, Inc., 7000 Roeder Road, Silver Spring, MD 20910-4405
313. J. T. Whetten, Associate Director, MS-A107, Energy and Research Applications, Los Alamos National Laboratory, Los Alamos, NM 87545
314. I. L. White, NYSERDA, 2 Rockefeller Plaza, Albany, NY 12223

315. M. Williams, Professor, Department of Economics, Northern Illinois University, DeKalb, IL 60115
316. H. Williams, CEES, Princeton University, 100 Von Neuman, Princeton, NJ 08544
317. J. L. Wolf, Alliance to Save Energy, 1725 K Street, NW, Suite 914, Washington, DC 20006-1401
318. A. L. Wood, Director, EEB HA 254, National Research Council, 2101 Constitution Avenue, NW, Washington, DC 20418
319. D. Wood, Massachusetts Institute Technology, CEPR, E40-433, 77 Massachusetts Avenue, Cambridge, MA 02139
320. J. H. Wood, Director, Dallas Field Office, Energy Information Administration, U.S. Department of Energy, 1114 Commerce Street, Room 804, Dallas, TX 75242
321. O. S. Yu, Director, Utility Programs, SRI International, 333 Ravenswood Avenue, Menlo Park, CA 94025
322. Office of Assistant Manager for Energy Research and Development, DOE-ORO, P.O. Box 2001, Oak Ridge, TN 37831-8600
323. Office of Information Services, ORAU

324-423. Energy Division External Distribution

424-433. OSTI, U.S. Department of Energy, P.O. Box 62, Oak Ridge, TN 37831

☆ U.S. GOVERNMENT PRINTING OFFICE: 1990 — 748 - 114 / 00126