ORNL
MASTER COPY

MAY 01 1989

ORNL/ACP/LTR-89/1

Contract Program: Advanced Controls (ACTO) Program

Subject of Document: Feedwater Control System Status Report

Type of Document: Letter Report

Author: T. L. Wilson

Date of Document: April 1989

DOE/HQ Monitor: H. Alter, Division of Advanced Technology Development

NOTICE This document contains information of a preliminary nature. It is subject to revision or correction and therefore does not represent a final report.

[redacted]

Prepared by
Instrumentation and Controls Division
OAK RIDGE NATIONAL LABORATORY
Oak Ridge, Tennessee 37831-6010
operated by
MARTIN MARIETTA ENERGY SYSTEMS, INC.
for the
U.S. DEPARTMENT OF ENERGY
under Contract No. DE-AC05-84OR21400

ACKNOWLEDGMENTS

The author appreciates and acknowledges the contributions from members of the staff of the Advanced Controls Program. Mr. Ahmet Sozer developed the simulation model and proportional-integral control system design. Mr. S. J. Ball contributed on the performance monitor and the overall planning of the project. Mr. N. E. Clapp contributed on the design of the smart sensors concept and developed a prototype smart sensor demonstration program for a network of pressure sensors. Mr. C. E. Ford designed the software architecture, designed the interactive graphics, and implemented the communications between the simulation and interactive graphics. Mr. Matt King also contributed on the interactive graphics. Ms. Anna Messner was responsible for testing programming concepts on the software architecture, graphics, and communications using a small system model and contributed on the programming of the smart sensors, performance monitor, and mode selector. Ms. Messner also tested programming concepts for parallelizing the simulation model.

TABLE OF CONTENTS

List of Figures iv

List of Tables v

Summary vi

1. Introduction 1

2. Description of the Feedwater System Model 2

2.1 Process Monitoring Displays and User Interface 3

3. Smart Sensor 5

3.1 Redundancy 6
3.2 Noise Analysis 8
3.3 Instrument String Tests 8
3.4 User Interface for the Smart Sensors 9

4. Performance Monitor 9

5. Continuous Controllers 12

5.1 Proportional-Integral Controller 16
5.2 Modern Control Design 16
5.3 Calculation Procedure for Modern Control Designs 18

6. Mode Selector 18

6.1 Mode Selector User Interface 22

7. Software Architecture and System Programming 23

8. Conclusions 24

9. References 25

FIGURES

2.1 Schematic Diagram of PRISM Feedwater Condensate System. 3

2.2 Process Monitor Screen Top Level. 4

2.3 Process Monitor Middle Level. 4

2.4 Process Monitor Bottom Level. 5

3.1 Redundant Sensors Tests--Range and Median Overlap. 7

3.2 Sample Noise Spectra. 8

3.3 Sample of Instrument String Monitor. 9

3.4 Example of Smart Sensor User Interface Screen. 10

4.1 Sample Performance Monitor Test. 11

4.2 Sample of User Interface Screen for Performance Monitor. 12

6.1 Mode Selector Calculation Cycle. 21

6.2 Sample Screen for Mode Selector for Feedwater Valve. 22

TABLES

4.1 Heat Exchanger Failure Modes and Performance Monitoring Tests. 13

4.2 Pump Failure Modes and Performance Monitoring Tests. 14

4.3 Valve Failure Modes and Performance Monitoring Tests. 15

6.1 Mode Selector Functions. 19

SUMMARY

An overview and status report on a conceptual design of an advanced control system for the feedwater system for PRISM is presented. The control system functions are divided into diagnostic functions and operational functions. The diagnostic functions include the smart sensor and the performance monitor. The smart sensor function performs signal validation. The performance monitor analyzes the process for failures and degradation. The operational functions include continuous controls and mode selector. The continuous controls regulate levels and flows in the feedwater system. The mode selector controls discrete transitions between states.

Several unique design principles are applied. One significant design principle is the use of three or more independent tests to diagnose failures or to detect mode transitions. Automated reasoning acts on a two-out-of-three rule. This design principle emulates human reasoning by considering all indications before acting. The two-out-of-three logic significantly improves the reliability of the individual tests. The overview lists the multiple indications for sensor failures, process component failures, and mode changes. The design methods for the continuous controls include conventional and modern control design techniques. The controllers are applied to the level control loops in the feedwater system.

The status of the control system design and the demonstration computer program are also presented. The status, in summary, is that the conceptual design of the control system is completed and the demonstration program which integrates all of the functions is partially completed. The demonstration program currently includes the user interface program, preliminary designs for most of the interactive graphics, the system simulation program and the continuous control system. The remaining features will be added later. The remainder of the year will see the addition of the turbine system and the steam bypass systems to the demonstration program.

1. INTRODUCTION

Control systems for advanced power plants will perform many monitoring and control functions presently performed by human operators. The control system will be more automated and will operate over a wider range of normal and abnormal conditions than current control systems. The control systems will improve the performance of the plant through advanced control strategies and improve the operator's knowledge of the plant through automated testing and diagnostics. A prototype control system for the PRISM (Power Reactor Inherently Safe Modular) feedwater system has been developed to demonstrate many advanced concepts for control. In this prototype control system, the advanced control system functions are divided into four major areas: smart sensor, performance monitor, continuous control, and mode selector. The smart sensor and performance monitor are diagnostic functions. The smart sensor validates the measured signals. The performance monitor tests the process components to detect failures and degradation. The continuous controller and mode selector perform the process control functions. The continuous controller provides the regulation of valves to control levels and flows in the feedwater system. The mode selector controls transitions between discrete states. Starting a pump and opening a valve are examples of discrete mode changes.

The conceptual design for the feedwater control system is being implemented as an interactive demonstration program. The demonstration is connected to a fully functional user interface using CRT graphics and to a computer simulation of the process which drives the control system with realistic inputs. The graphical interface gives the demonstration a hands-on feel. The interactive demonstration environment permits the features to be reviewed by sponsors, outside experts, and potential users of the technology. To illustrate the interactive environment, sample screens are given in the report for each of the major functional areas.

A fundamental rule adopted for this control design is the two-out-of-three (or more) rule for control system logic. Each logical evaluation, such as a failure mode in the smart sensors or performance monitor or state transition in the mode selector, is identified by three or more independent tests. The control system logic is then based on two or more positive indications from the set of tests. This multiple test logic reduces the probability of both false and missed alarms.

The automatic reasoning or logic in a control system consists of "if-then-else" scenarios, (e.g., if Sensor A > Setpoint B, then do Action X.) Two types of errors are possible, omission and commission. The control system can fail to do something it should or act when no action is required. The reliability of the decision or "if" portion is the probability that neither type of error occurs. The reliability is significantly improved by replacing a single test with two-out-of-three logic. For example, if the reliabilities of three tests are assumed to be 90% and mutually independent, then the reliability of the two-out-of-three

test is 97.2%--an improvement of 7.2%.* It may be difficult to establish a quantitative estimate of a test's reliability or independence from other tests. Nonetheless, using engineering judgement, the designer can normally conceive that tests are reasonably reliable and independent even when quantitative reliability estimates cannot be made. The combination of test results using two-out-of-three logic then provides a large if quantitatively unknown improvement in the reliability of the automated reasoning of the control system.

The design rule of requiring at least three tests is also an attempt to duplicate the human operator reasoning that checks the consistency of all indications before acting on one of them. Even more important, the design rule provides a mechanism to identify cases when the automatic reasoning has a problem and needs the higher reasoning of the operator to evaluate the conditions. When a set of three independent tests gives the same result, whether all indicate failed or all indicate normal, everything is going according to design and the operator can go get a cup of coffee. But, when two tests say normal and one says failed, the control system should call on the operator to use higher reasoning to evaluate or monitor the inconsistency more closely. Thus, the multiple test strategy provides a means to determine that the control system is in a condition that is well-defined and anticipated by the control system designer. Assigning the task of evaluating an unexpected or inconsistent pattern to the operator is a natural division of labor between man and machine in the highly automated plant.

The multiple tests and two-out-of-three logic are applied consistently in the feedwater control system in the functions which perform automatic reasoning, that is the smart sensor, performance monitor, and mode selector; however, the test reliabilities for the individual tests are not evaluated. Estimation of the reliabilities either by analysis or statistical experiment is a project for future research. Such estimations will undoubtedly provide greater understanding of the causes for errors in the decision-making logic of the control system and show the way toward improvements in the logic design.

2. DESCRIPTION OF THE FEEDWATER SYSTEM MODEL

In the present demonstration, the simulation includes the feedwater/condensate system and the steam generators in the balance of plant. As a controls problem, the current demonstration model provides a relatively large, complex system on which the advanced control and monitoring features can be demonstrated. The rest of the balance of plant, including the turbine-generator and steam bypass systems, is currently being added to the demonstration.

A simplified schematic of the current model is shown in Fig. 2.1. The model includes the components in the feedwater/condensate system from

---

*The calculation of the reliability is an application of the binomial probability distribution, $0.972 = (.9)^3 + (3)(.9)^2(.1)$.

the condenser to the steam generator. The feedwater/condensate system preheats the feedwater from the condenser in a series of feedwater heaters. Pumps in the feedwater train raise the pressure from condenser vacuum to the main steam pressure before the feedwater enters the steam drum. The steam generator extracts heat from the intermediate sodium cycle and produces steam to drive a turbine/generator. The main requirement of this model is to simulate the measured signals such as, pressure, temperature, level and flow which are used to drive the control system and to respond to the actions calculated by the control system.

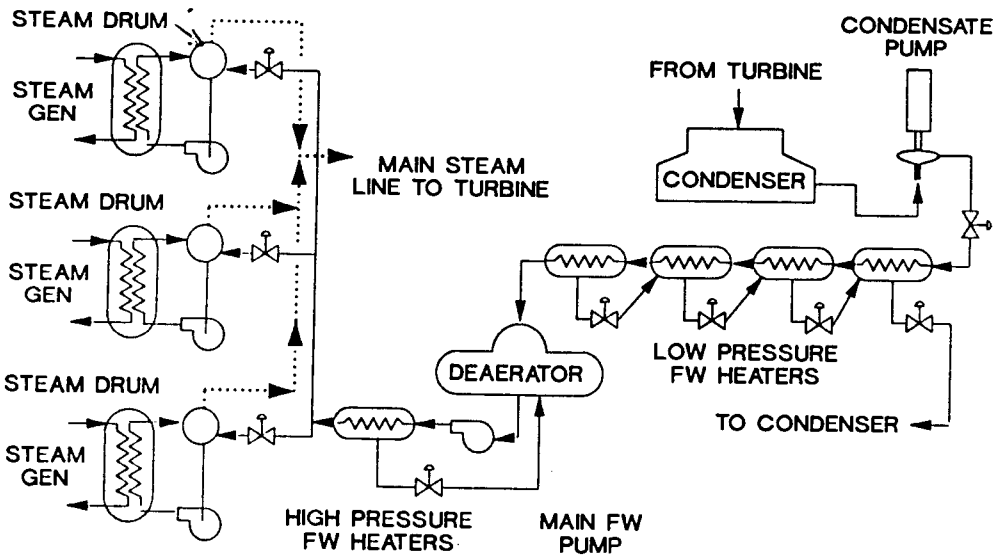

Fig. 2.1. Schematic diagram of PRISM feedwater condensate system.

Certain simplifications of the feedwater/condensate system are necessary to make the model practical in terms of size and execution time. Primarily, the simplifications are to eliminate parallel components replacing them with either constant boundary conditions or single equivalent modules.

The model is constructed using modules from the Modular Modeling System (MMS) library developed by EPRI and licensed through the Babcock and Wilcox, Company [1]. The model was assembled using the PC-based, interactive graphical program, MMS-EASE [2]. The modeling data are representative of dimensions and flows which would be characteristic of a feedwater system for a plant the size (in electrical power) of the PRISM plant.

2.1 PROCESS MONITORING DISPLAYS AND USER INTERFACE

The user interface for monitoring the results of the process simulation in the demonstration are designed to be similar to CRT-based process monitoring screens for a control room display. The displays were developed using the DV Draw computer graphics program on the SUN workstation. The displays are organized in a three level hierarchy of

output. The top level shows an overview of the entire feedwater system on a single screen, Fig. 2.2. The middle and lower level screens show progressively more information in a narrower view of the feedwater

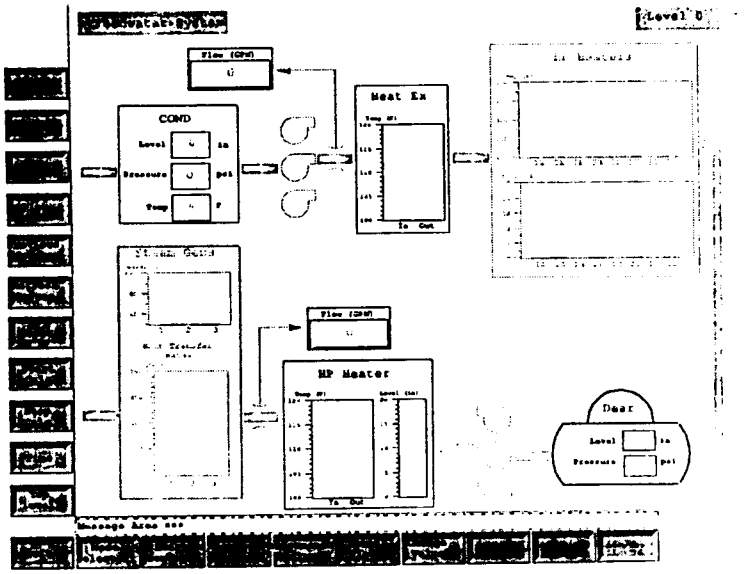

Fig. 2.2. Process monitor screen top level.

system. Figures 2.3 and 2.4 are examples of middle and bottom level screens in the process monitor. The middle level shows the two strings of low pressure heaters and deaerator. The lowest level shows just the deaerator. There are three middle level screens and twelve bottom level screens. Each level in the hierarchy shows all the variables displayed at the higher levels plus additional data. The lower levels also use more graphical representations of the measured data (bar charts) to present the plant conditions.

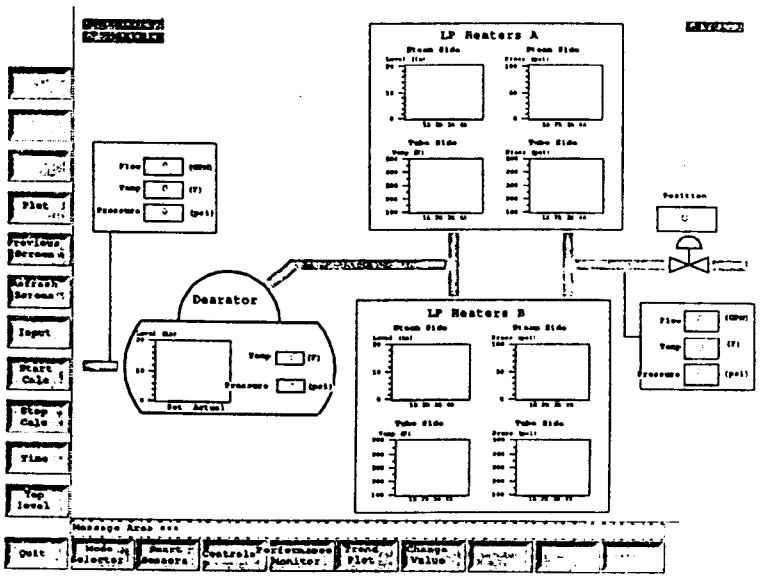

Fig. 2.3. Process monitor middle level.

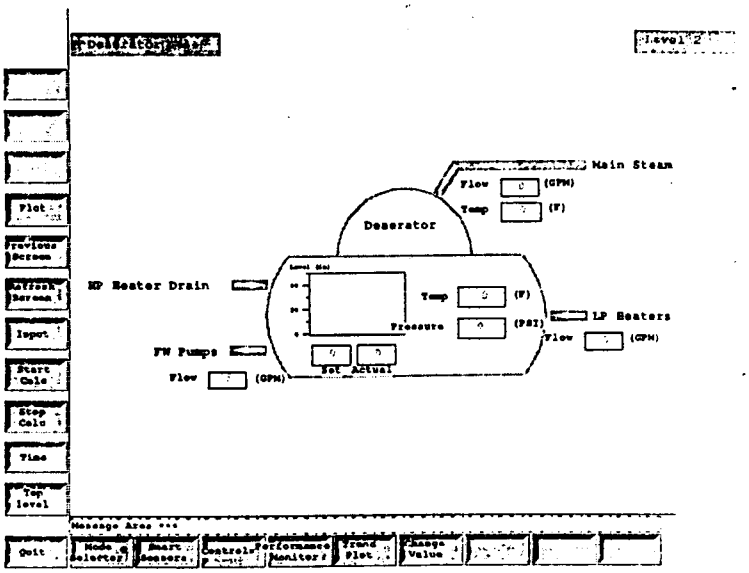

Fig. 2.4. Process monitor bottom level.

Trend plots (variable versus time) are planned but not yet implemented on the process monitor.

3. SMART SENSOR

The smart sensor feature of the control system processes raw sensor data samples and generates validated data. The signal processing is "smart" in the sense that some of the cognitive tests that an operator or engineer might perform to evaluate whether sensor data are normal are performed continuously, on-line by the control system. Three, relatively simple, deterministic tests are used to diagnose sensor health. The intent is to present tests that the operator can readily understand and can easily validate. A more exhaustive study of possible signal validation techniques is currently being conducted at The University of Tennessee [3]. At the time of this report, the implementation of the smart sensor function in the demonstration program is not complete. The smart sensor algorithms have been developed this year and tested as separate, stand-alone programs but are not connected to the simulated process measurements in the interactive computer program. This part of the computer program development is currently underway. Random number generators or user inputs will be used to drive smart sensor operation where noise or random failures are needed to demonstrate the smart sensor functions.

All the sensors in the feedwater system are processed using the same set of three validation tests. By performing the validation tests, the control system helps to alleviate the operator's dilemma of whether an abnormal reading indicates a fault in the instrumentation or the process.

The advantage of assigning the sensor validation task to the control system rather than the operator is that the digital controllers can process many more sensor samples and can perform the numerically intensive operations more accurately than the operator. In contrast to a digital controller, the operator can use subjective reasoning and can adjust the processing algorithm on the fly. Hence, the role assigned to the operator in the smart sensor scheme is to monitor the control system fault detection and to evaluate any results in the multiple test scheme that give inconsistent results.

As stated in Sect. 1, the smart sensor uses a two-out-of-three rule to combine the results of the three major tests on a sensor to reach conclusion about the health of the sensor. If the operator does not intervene, the control system automatically locks out failed sensors based on this logic.

The three tests used by the smart sensor fall into the following main categories: comparisons of redundant measurements (using physically, redundant sensors and analytically calculated redundant measurements), noise analysis, and instrument string monitoring. The following sections explain these tests.

3.1 REDUNDANCY

Usually, more than one sensor is designed into the plant to measure a particular parameter. Comparison of all the available sensor outputs is an easy way to identify a sensor which does not meet the pattern. In addition to direct, physical measurements of a variable, analytically redundant values are also used to estimate measurements. Analytically redundant values are inferred using directly measured data from elsewhere in the plant in conjunction with an analytical calculation of the desired parameter. For example, the outlet temperature from a heat exchanger can be inferred using the measured inlet temperatures and feedwater flow rates and an analytic calculation of the heat transfer rate in the heat exchanger. The heat transfer coefficient in the calculation may be based either on historical performance or a design calculation. A measurement obtained by analytic redundancy is included as an additional measurement with the multiple physical sensors in the redundancy test. The only difference in the treatment is that the error tolerances are different for the analytically estimated values.

The redundancy algorithm applies range and median overlap tests which check that the individual sensor values are on scale and form a cluster. The range test detects signals which fall above or below the range of acceptable values for a sensor output. The range test detects some of the common failure modes which produce out-of-range results. For example, 4 to 20 milliamp current amplifiers produce 0 milliamps on loss of power. The range test identifies failures of this sort. The median overlap test checks to see that all the signals are within their error tolerance of the median. Only signals which were not locked out on the previous smart sensor cycle and which pass the current cycle range test are included when evaluating the median. Stray signals which are far from the center of the

cluster are flagged by the median overlap test. Figure 3.1 illustrates the two tests. The sensor value is indicated on this figure by the height of the center line through the bar on the graph, its error tolerance by the length of the bar. Sensor 4 fails the range test. Sensor 3 fails the median overlap test. The remaining signals are considered valid. The only difference in the treatment of analytically redundant values and the physical measurements is error tolerances in the tests may be different. In this example, the error bar for the analytical redundant value is larger than the direct measurements.

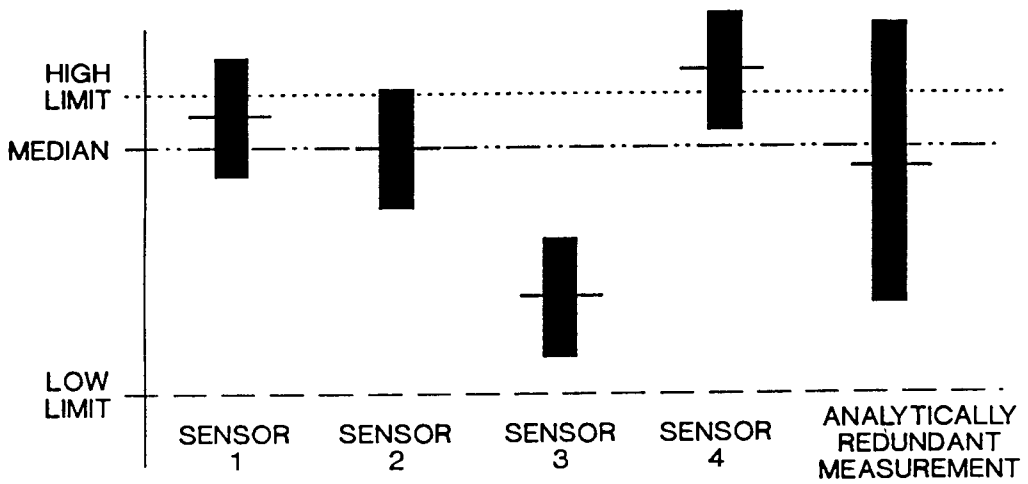

Fig. 3.1. Redundant sensor tests -- range and median overlap.

The redundancy algorithm tends to break down if few sensors remain. Some special rules are applied when there are few remaining sensors. If only two sensors remain after the range test, the median is the higher of the two. The higher value is usually the value more likely to be correct since more failure modes cause the sensor output to be low than high. Both of the remaining sensors pass the median overlap test if they are within the error tolerance of each other. Both fail the overlap test if they are not. In the extreme case with only a single value, the median test is bypassed and redundancy test is considered failed. Failing the redundancy test alone does not cause a sensor to be locked out. Because of the two-out-of three rule used to detect a failed sensor, the remaining sensor must also fail on a second test, either the noise analysis or the instrument string test before it is locked out.

The outputs from the redundancy routine are the overall output of the measurement or channel output and the sensor status flags for the tests. The median is usually used as the output for a channel. The mean is also calculated and may be selected as the channel output by the operator. The median is considered a better choice than the mean because the median is not affected by a single sensor value that is incorrect by a large amount. The status flag for each sensor indicates that the sensor passed both the

range and overlap tests. The test also produces a status flag for the measurement channel as a whole. The channel status flag indicates that there are at least two valid sensors (or one sensor and an analytically redundant value).

3.2 NOISE ANALYSIS

Practically all sensors have some normal random fluctuation about a mean value. Thus, the power spectral density function or PSD for the sensors have a predictably consistent "signature". A visual examination of the PSD readily identifies a significant change. The objective of the noise analysis test is to devise cognitive algorithms to examine a PSD automatically for a significant change. The noise analysis test uses a suite of eight discriminants from [4] for automated signature analysis of PSD data. The eight tests compute the variations in the sample PSD compared to a baseline PSD. The values of the deviations are compared to a learned statistical variation in the PSD. An acceptable deviation from the eight tests is enclosed within an eight-dimensional ellipsoid characterizing the distribution of the set eight discriminants. The dimensions of the ellipsoid can be tuned using the learned baseline of PSD data to enclose all the normal fluctuations in the signature. In the sensor fault detection, the failures are postulated to be characterized by a very large shift, thus the dimension of the ellipsoid are set to enclose a large volume. Figure 3.2 illustrates spectra that would readily be identified by the algorithm as acceptable or failed.

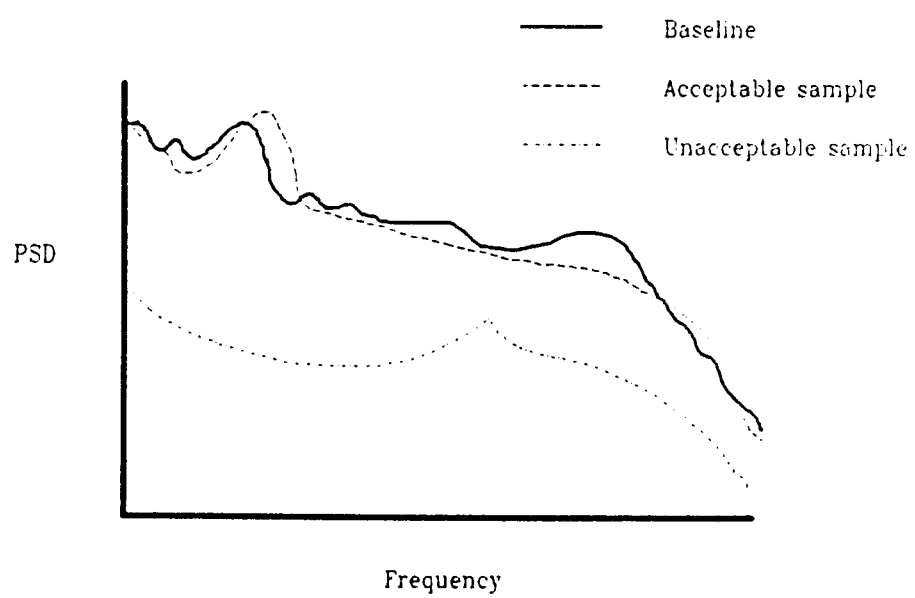

Fig. 3.2. Sample noise spectra.

3.3 INSTRUMENT STRING TESTS

Every sensor depends on a string of amplifiers, power supplies, communication networks and other components to deliver its signal to the control system. Failure of any one of the components can cause loss of the signal. Although the status of each component is usually monitored,

an instrumentation mechanic must go through instrumentation schematics to identify what components are associated with a particular sensor. The instrument string test in the smart sensor algorithm is programmed with a knowledge base about the wiring schematics and simple Boolean expressions to determine if all the components needed for a sensor to operate are available. Figure 3.3 shows components in a hypothetical temperature channel. Below the temperature channel is a logical test to monitor the string automatically. The components which are redundant (in the example, sensor power supplies and communication networks) pass through an "or" gate. The series components (the signal converter, amplifier, analog-to-digital converters, and multiplexer) plus the outputs of the "or" gates go to an "and" gate.

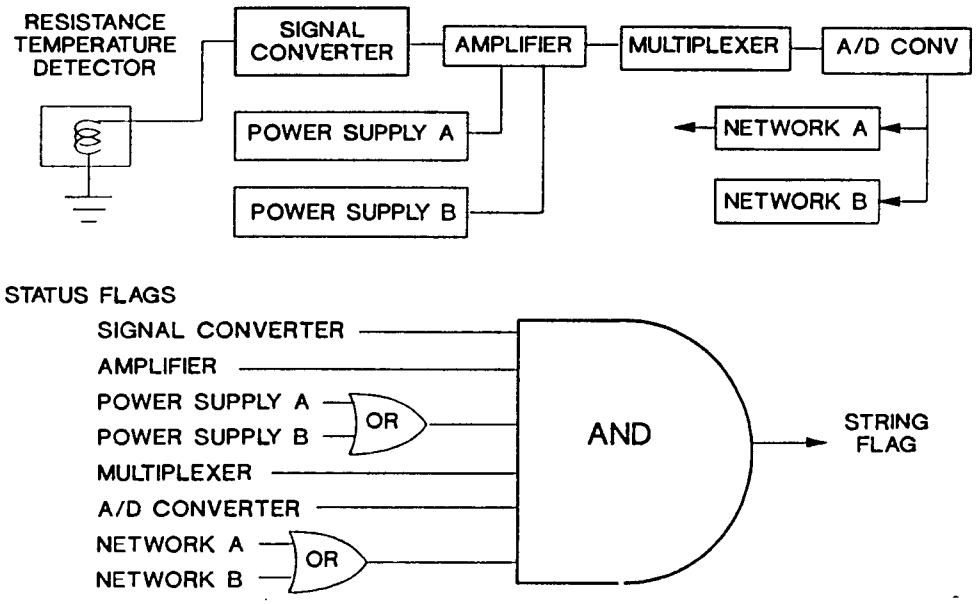

Fig. 3.3. Sample of instrument string monitor.

The instrument string monitor is a simple, reliable test of the sensor health. Moreover, it gives an additional useful piece of maintenance information for failures--it points to the exact component that needs to be replaced to restore a failed sensor.

3.4 USER INTERFACE FOR THE SMART SENSORS

A typical interface screen is illustrated by the temperature channel for the steam generator downcomer as shown in Fig. 3.4. The results of the individual tests are indicated on the screen on by "OK" or "FAILED".

4. PERFORMANCE MONITOR

The performance monitor identifies failures and deteriorating performance in the major components of the feedwater system. The current demonstration contains diagnostic tests for failures in the pumps, valves,

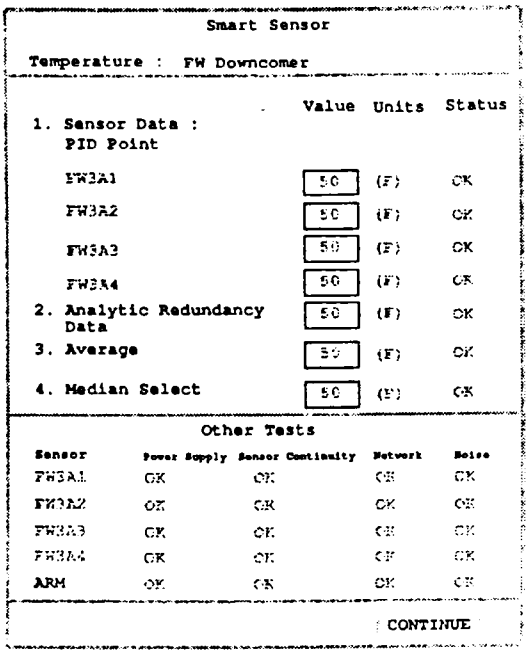

Fig. 3.4. Example of smart sensor user interface screen.

and heat exchangers. As in the smart sensors, the diagnostic tasks assigned to the control system rather than the operator are the repetitive, numerically intensive operations for which computers are better suited. The performance monitor uses computational tests such as comparison of actual performance to specified design performance or previous performance to identify failure or deteriorating performance. The detection logic adheres to the two-out-of-three rule for detecting failures as much as possible. In some cases, the designer could only postulate two tests. For these tests, two-out-of-two logic is used to indicate a failure.

The tolerances which are used in each test to determine "normal" and "failed" performance have two values, corresponding to steady state and transient operation. The performance monitor reads a flag sent by the mode selector to determine that the plant is in the midst of a transient. The performance monitor uses this flag to select the proper tolerance for the test.

An example of a performance monitor for a pump impeller failure mode is shown graphically in Fig. 4.1. This monitor contains only two tests. The top part of the test involves a design calculation. Given the current head and speed, the manufacturer's head curves are used to calculate a design flow rate which is compared to the actual flow rate. At a certain percentage deviation, the pump fails the design flow test. The second

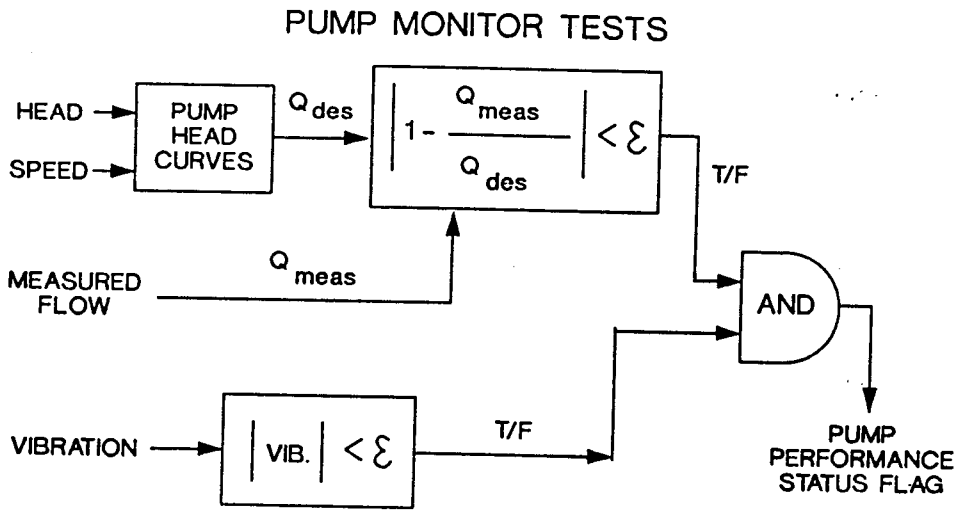

Fig. 4.1. Sample performance monitor test.

part of the test is a vibration monitor. Presumably, anything which damages the impeller will also cause it to be out of balance, hence the vibration will increase. The vibration monitor indicates a failure when the amplitude exceeds a specified threshold. An "and" expression combines the results of these two tests to give the result for the pump monitor for impeller degradation. "Failed" is false in the logic; hence, the "and" gives a two-out-of-two rule to indicate the pump impeller failure. When only one test indicates failed, the performance monitor for the pump indicates "suspect." Figure 4.2 shows a sample screen for a performance monitor.

At the time of this report, performance monitor tests have been designed for each valve, feedwater heater, and pump. These tests have not been connected to the interactive computer program. Also, the simulation model in its current form cannot simulate many of the failures of the feedwater system or the measured data that might identify them. For example, the MMS pump module does not simulate the vibration signal that would indicate a pump impeller degradation. In FY 1989, the tests will be implemented on the interactive computer program to the extent that a thermal-hydraulic model can represent them. The program will perform the actual performance calculations for tests that can be verified against the thermal hydraulic simulation model. The tests which involve thermal hydraulic calculations include design performance calculations for valve flow, valve actuator stroke time, heat exchanger heat transfer rate, pump flow, and steam temperature/pressure saturation. Results from other performance measurements which cannot be simulated include chemical concentrations and conductivity of the feedwater, vibration level, and acoustic emission level. The test results for the non-calculated tests (failed or noral) will be included in the failure evaluation logic a

PERFORMANCE MONITOR

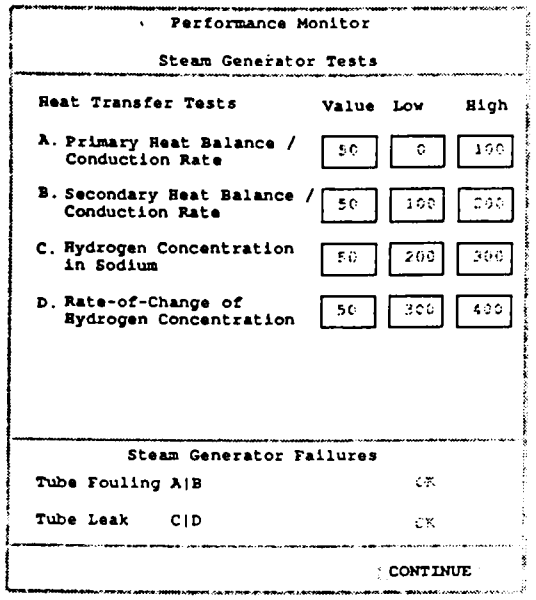

Fig. 4.2. Sample of user interface screen for performance monitor.

constants which the demonstration operator selects manually or generates using a random number generator. The performance monitor will be able then to demonstrate the response of the control system to both true and erroneous indications of process failures.

Tables 4.1, 4.2, and 4.3 list the postulated failure modes and the tests that have been designed to detect them for heat exchangers, pumps, and valves.

5. CONTINUOUS CONTROLLERS

The continuous controllers in the feedwater control system are the regulators that control levels and flows. The continuous controllers for the PRISM design require special attention because of the degree of maneuverability required for the multi-modular PRISM design. One of the design objectives is that a reactor trip or rapid run-back in one reactor module does not cause a significant upset in the rest of the modules or in the balance of plant. Consequently, the control of balance of plant must be tuned so that rapid power change corresponding to the loss of one module (i.e., one third of full power) may be tolerated. This transient response capability is far more demanding than for a conventional plant which simply shuts down when the reactor trips. During the design phase, several continuous controller design strategies have been investigated to determine design techniques which are satisfactory in the PRISM plant.

Table 4.1. Heat exchanger failure modes and performance monitoring tests

Failure mode	Test or indication	Notes
Feedwater heater tube leak	Acoustic emission level[a]	Microphones listen for the sound of a leak.
	Hydrazine concentration in steam condensate[a]	Feedwater conditioning chemical does not pass through the steam generator.
	Drain valve and emergency drain valve position	High valve positions indicate high flow due to leakage to the shell side.
	Liquid level	High level indicates drain valves cannot handle flow.
Air binding	Actual vs design heat transfer	Actual heat transfer is calculated from a heat balance on feedwater. Design heat transfer depends on temperatures and the design heat transfer coefficient.
	$T_{sat}(P_{steam})$ versus T_{steam}	Water property evaluation of T_{sat} as a function of steam pressure compared to actual temperature. Discrepancy indicates presence of a non-condensible gas.
	Failure of vent system[a]	Detected by separate performance monitor function for the vent system
Tube fouling	Actual vs design heat transfer	
	Extraction stage pressure[a]	

[a]Data for test are not simulated. Random number or user input is substituted for test result.

Table 4.2. Pump failure modes and performance monitoring tests

Failure mode	Test or indication	Notes
Bearing wear, shaft balance, eccentricity, rubbing	Vibration monitoring[a]	Uses automated noise analysis of proximity probes and accelerometers for specific failure indication.
Broken shaft/shaft seizure/motor failure	Current/voltage[a]	Current/voltage versus time characterizes the motor failure, broken shaft or shaft seizure
	Loss of flow	Flow versus time characterizes loss of motor, broken shaft, or shaft seizure
	Shaft speed	
Pump trip	Loss of flow	
	Trip status monitor[a]	Pump protection circuit is part of pump local controls. This test monitors the protection circuit output.
	Trip variables monitor - Low suction pressure - High discharge pressure - Low lube oil pressure[a] - Low seal pressure[a] - High seal temperature[a] - High seal flow[a]	This test monitors same variables that initiate the pump trip. Some may change gradually so that failure prediction may be performed.
Impeller degradation/ flow blockage	Actual vs design flow	Design flow calculated from manufacturer's head curves and measured speed and head.
	Vibration monitoring[a]	Automated signature analysis for specific failure mode.

[a]Data for test are not simulated. Random number or user input is substituted for test result.

Table 4.3. Valve failure modes and performance monitoring tests.

Failure mode	Test or indication	Notes
Pneumatic actuator	Air pressure[a]	
	Compressor status monitor[a]	Detected by a separate performance monitor function in the air system
	Transfer function for change in position vs change in demand (applies to modulating valves)	Identification of the actuator dynamic characteristics to indicate a change in operation.
Motor actuator	Voltage or current[a]	
	Stroke time	Test applies to open/closed valves.
Valve leakage	Acoustic emission level[a]	
	Downstream effect	This depends on the installation. Usually some downstream temperature, pressure, or tank level is evidence of leakage.
Valve flow blockage	Flow vs design flow	Design flow is calculated using manufacturer's valve characteristic and measured head and valve position.

[a]Data for test are not simulated. Random number or user input is substituted for test result.

The studies have evaluated controllers using conventional proportional-integral tuning schemes and modern state space control design techniques. The modern control design has been implemented in the current version of the interactive computer program.

Future work in FY 1989 will include additional validation tests of the different control strategies. The tests will evaluate the performance of the controller over a wider range of normal and abnormal plant conditions. We also expect to convert the simulation models and control algorithms so that they may be tested in ARIES-P, the General Electric full plant transient analysis program for PRISM. The tests will determine the best method for responding to a variety of normal and abnormal transients. The final control algorithm is likely to be one which switches between several different control algorithms as conditions change. In the current demonstration, a single control algorithm is active.

5.1 PROPORTIONAL-INTEGRAL CONTROLLER

The simplest control scheme for the level control loops in the feedwater system is the conventional, proportional-integral (PI) controller. Since a basic control system of some sort is essential to run and test the plant model as it is being developed, the simulation model was developed with PI controllers for each level control loop. The design procedure for the PI controllers used rules of thumb for selecting initial settings for the proportional and integral gains. The gains were then tuned in transient simulations so that the simulations ran smoothly. Although the tuning was applied to a simulated plant, the trial and error procedure is similar to conventional practice in control tuning for power plants. The procedure does not produce controls that are "optimal" or even well-tuned, but, for modest transients and testing purposes, the resulting PI control system works reasonably well.

The PI controllers will be included as one of the options in the continuous control selectable architecture. The PI controllers have the advantage of isolating the control functions into separate single-input-single-output control loops which require a minimum of measured data. The PI control is particularly useful as a backup system or "lifeboat" when the communications network required for a multivariate control system is lost.

5.2 MODERN CONTROL DESIGN

Modern control techniques were also investigated. The main motivation for applying modern control theory is to produce well-tuned, robust control systems with a minimum of engineering time. Two modern control design techniques were adapted to solve specific control problems. The techniques included linear quadratic regulator with loop transfer recovery (LQR/LTR) and linear quadratic regulator with exogenous inputs (LQR/EI).

The LQR/LTR technique addresses the problem of controller robustness for the modern state space control design. One of the hazards of

designing a fast responding control system using modern control techniques is that the controller may have a low stability margin unknown to the designer. The LQR/LTR technique generalizes the concepts of phase and gain margin of single-input-single-output control to multivariate systems so that the stability properties of multivariate compensators are known [5]. The LQR/LTR technique produces control systems which are "robust", that is, stable despite changes in parameters, neglected nonlinearities, unmodeled high-frequency dynamics, and inaccuracies due to model order reduction. The LQR/LTR technique has been applied and exhaustively tested on the deaerator level control loop.

The LQR/EI is a technique for including the effects of external disturbances and reference inputs with the modern designed state feedback controller. The problem in designing a controller using conventional LQR, which has only state feedback, is that external disturbances do not have an immediate effect on the control output. One approach to handling disturbances is to enlarge the state system to include the external disturbance. This approach ultimately leads to treating the whole plant as a multivariate control problem. Although the state space method does not preclude analyzing the entire plant as a single multivariate state space problem, the practical limitations of the computational speed and accuracy do limit the maximum size of the state space system. The practical state space problem treats a fairly small subsystem of the plant. Another approach is to analyze a small subsystem but include the effect of disturbances as a forcing function on the subsystem state space problem. The linear quadratic regulator with exogenous variables is an innovative design procedure which combines an optimal state feedback controller with a feedforward controller that compensates for the disturbances. The feedforward signals consist of all the measurable external disturbances and reference inputs acting on a subsystem. Collectively, the feedforward signals are called the "exogenous" inputs to the subsystem. The feedforward controller compensates approximately for the coupling effects between subsystems. The major benefit to this approach is to divide one large multivariate control system for the power block into smaller subsystems by using the feedforward terms to account for the subsystem-to-subsystem coupling effects. The feedback portion of the controller uses the linear quadratic regulator and optimal state estimator methods to calculate the feedback matrices. The feedforward portion uses a method described by Friedland in [6] in which a linear, matrix-algebraic formula calculates the appropriate gains for the feedforward signals.

Two level control loops have been designed using the LQR/EI, the steam generator level controller and the low pressure heaters level controllers (five heaters in series with cascaded drains). The steam generator level controller tested the capability of this control strategy to handle large coupling effects between steam generators during a rapid runback of one module. A discussion of the steam generator level controller is given in a paper describing multivariate control strategies applied to PRISM, [7]. The level control for the low pressure heaters is an example of a high-order system. The controller was chosen mostly to demonstrate the capability to handle a fairly large state space model (40 state variables) using the exogenous inputs technique. Both applications

of the technique showed that the feedforward term correctly anticipates the effect of the disturbances and reduces the maximum deviations of the levels from their setpoints in the rapid runback transients.

5.3 CALCULATION PROCEDURE FOR MODERN CONTROL DESIGNS

There are three basic steps in the design of the modern controllers described here. First, a linearized model must be constructed. Then, the control design calculations are performed which produce the compensator gain matrices. Finally, the control system design is tested by simulation.

The modern linear control methods are based on a linearized state space model. The control designs analyzed in this project used the MMS simulation model to calculate the linear state space matrices. Because the MMS model is readily reconfigured, the feedwater system model was divided into several subsystems, each representing a basic control loop. Some subsystems were single-input-single-output, some multi-input-multi-output. Each subsystem model included the main component to be controlled and the associated components needed to simulate the controls and dynamic process affecting the main component. For example, the deaerator subsystem consisted of the deaerator, the condensate pump, and the deaerator control valve. In addition to the deaerator subsystem, the other major subsystems in the feedwater system were the steam generator, the high pressure feedwater heater (one heater), the low pressure feedwater heaters (five heaters in series), and the condenser. The nonlinear MMS models were linearized using a built-in function of the simulation language that calculates the linearized state space matrices by perturbation.

The next step is the calculation of the compensator matrices. The modern control design procedures used the computer programs Matrix_X [8] and CASCADE [9]. These products automate the numerical operations of modern control design and permit the designer to perform matrix algebra as easily as scaler algebra.

The final step in modern control design, or any control design, is testing the control system by simulation. Control design involves many approximations and compromises. Many of the effects such as coupling among subsystems or modules, nonlinearity, and saturation of the forward element (e.g., a valve fully open or closed) are readily assessed by test simulations over a set of transients using a nonlinear simulation model like the MMS model. Also, many control performance requirements such as overshoot and rise time are most directly observed in the time domain.

6. MODE SELECTOR

A mode change occurs between any two discrete states in the plant. For example, turning a pump on or off is a mode change. In conventional power plants, most mode changes are identified as steps in an operating procedure and are carried out under manual control by the operator. In the feedwater control system, the mode selector automates most of the discrete changes required for operation. In the current demonstration,

Table 6.1. Mode selector functions

Component	Description of mode change	Beginning and ending states		Transition point		
		A	B	Variable	A->B	B->A
Feedwater valves	The main and start-up FW valves are two control valves in parallel to control flow to SG. The start-up valve is a smaller valve. The control of FW flow swaps from the start-up valve to main valve at 10% flow. The start-up valve is then closed.	Start-up valve regulating and main valve closed	Main valve regulating and start-up valve closed	SG flow	10	7
Recirculation valve for FW pump	The recirculation valve in a line back to deaerator controls flow in FW pump at low power. When on, the valve maintains steady 30% of pump rated flow (15% of total) by regulating flow returned to deaerator	Regulator on Valve open	Regulator off Valve closed	FW pump flow	33%	27%
Recirculation valve for condensate pump	Same function as recirculation valve for FW pump. Recirculates to condenser	Regulator on Valve open	Regulator off Valve closed	Condensate pump flow	33%	27%
SG Recirculation pump	Constant speed pump in recirculation line is brought on at 40% SG flow	Pump off	Pump on	SG flow	40%	37%

Table 6.1. (Continued)

Component	Description of mode change	Beginning and ending states		Transition point		
		A	B	Variable	A->B	B->A
FW pumps	There are two 50% capacity FW pumps in parallel. The second pump comes on at 50% flow in the block	One FW pump	Two FW pumps	Block flow	50	47
Condensate pumps	Same as FW pumps	One condensate pump	Two condensate pumps	Block flow	50	47

the mode changes which have been implemented are the ones associated with normal power maneuvering. These are listed in Table 6.1. In FY 1989, the mode changes associated with failures identified by the performance monitor will also be implemented. In the current interactive computer program, the response to failures is not implemented because of the limited capability of the simulation model to reconfigure the feedwater system in response to abnormal condition.

The calculation loop for the mode selector is designed as a three step process as shown in Fig. 6.1. First, the mode evaluation step evaluates the primary logic to determine that a mode change needs to be initiated. This logic uses the two-out-of-three rule to insure a high reliability in the detection of the mode transition. Next, the indication is compared to other mode changes in the conflict resolution block. The possibility exists that the mode change might conflict with other mode changes taking place simultaneously elsewhere in the plant. The conflict resolution block evaluates if there are any conflicts when a change occurs. The conflict evaluation uses a priority table to decide which of the conflicting mode changes takes precedence. The mode change having a lower priority is either held or cancelled. So long as the mode changes are not in conflict, more than one mode change may be in progress simultaneously. Finally, the actions required to effect the change are carried out in the action sequence block. Each mode change usually involves more than simply turning a switch. A series of steps like an operating procedure are programmed in the action sequence block. In addition to acting on the plant to effect the mode change, the mode selector also uses the change in status to notify the rest of the control system that a transient is about to occur. Thus, transient dependent limits in the smart sensor and performance monitor and mode dependent gains and control algorithms in the continuous controllers may be designed into the other control functions of the control system. The mode selector includes a timing utility so that the steps within a block can be carried out in a timed schedule. The execution of the entire sequence of steps

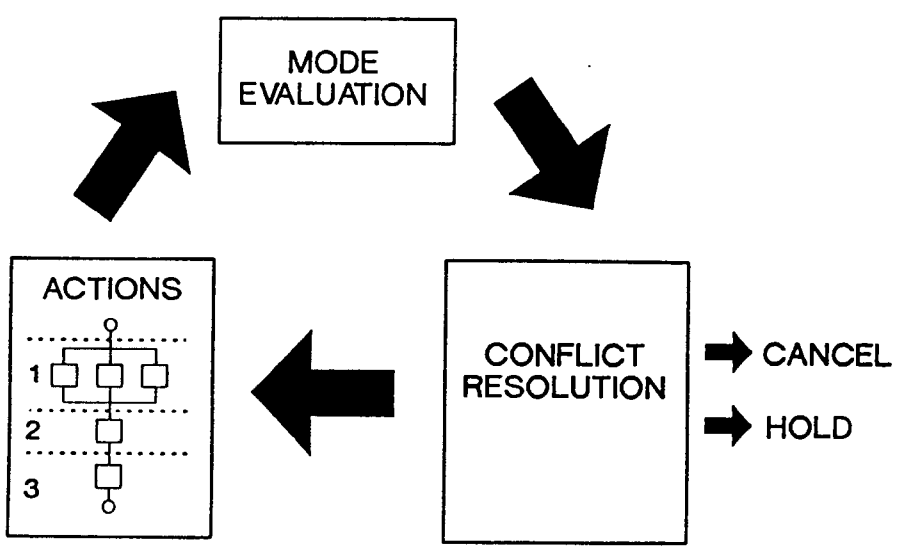

Fig. 6.1. Mode selector calculation cycle.

in the action block may not be completed in a single execution of the block. All the mode changes that are in progress are updated on each pass through the action block.

To illustrate the operation of a particular mode change, consider the first entry in Table 6.1, swapping from the start-up feedwater valve to the main feedwater valve. The mode evaluation step detects the change in mode. For this example, the primary indication for the mode change occurs when feedwater flow reaches 10% of full flow. Additional indications are required to complete the two-out-of-three logic. Two more indications for the mode change are that the turbine and reactor power are also near 10%. A certain amount of mismatch between these indications is expected. The test is formulated to check that the secondary indications are within 2.5% of 10%. The next step is the conflict resolution. For our example, a conflict might occur when we have a signal for power to decrease at the same time we reach the valve swap point. Since a power decrease will result fairly quickly in a flow decrease, it is reasonable to cancel the request for the valve swap. The next step in the cycle is the action block. This block issues commands to the process and to other elements in the control system to carry out the transition. For the feedwater valve transition, the sequence of steps might include: 1) opening the block valve which is in series with the main feedwater valve, 2) sending a command to the continuous controller to ramp the start-up valve closed, 3) switching the level control algorithm to a control algorithm specifically for the main valve, and 4) sending a transient-in-progress flag to the smart sensors and performance monitors so that those functions can open up their error tolerances during the transient period.

6.1 MODE SELECTOR USER INTERFACE

The interaction between the operator and the mode selector occurs through set of interactive screens which were set up with DV Draw. The mode selector interactive screen is selected by clicking the mode selector button on any of the screens followed by one of the secondary selections for a particular mode selector function. The output section of the mode selector window shows the current status. The input section allows the operator to change the setpoint and hysteresis for the mode change. The sample screen for the start-up to main feedwater valve swap is shown in Fig. 6.2.

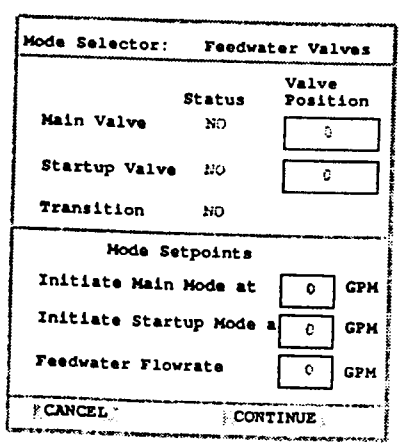

Fig. 6.2. Sample screen for mode selector for feedwater valve.

7. SOFTWARE ARCHITECTURE AND SYSTEM PROGRAMMING

The standard form for representing a control system is rapidly changing from a block diagram to a computer program. The software architecture chosen by the designer influences the ease of reading, maintaining, and validating the control system program for the life of the program. Some of the most creative work done on this project is establishing a new sort of architecture that promotes self-documentation and easy expansion through a simple modular structure. The software design applies the principles of object-oriented programming to the control system program. The design results in software structures or modules that are tailored to the advanced control system programming.

Each of the major control system functions in the interactive computer program (smart sensors, performance monitor, continuous controller, and mode selector) is a separate process in the UNIX sense. In other words, the functions are concurrently running programs. They may in fact execute on different computers or nodes on a network of UNIX computers. Each process is an object-oriented program. The calculational object is a collection of algebraic operations, logical tests, and data that represent a particular type of calculation. Instances of that function are called by a simple coding structure which lists the type of calculation, the names of the inputs and outputs in the message area, and the data for the calculation. The calculation object looks like a table from a report rather than a piece of coding. The elegance of the coding architecture is that the calculations and data are directly associated in the coding in a readable, tabular format.

The controlling program for a process is the ultimately simple program. It simply cycles through a set of objects invoked by the designer. When it is through with one pass, it goes back to the beginning of the list and does it again. The synchronization of tasks in the design is minimal. It is expected that a few tasks will wait for updated data to be written before performing a calculation cycle. To achieve this simple synchronization, the first operation in the program is a monitor that watches for an updated time tag in the message area to indicate that new data are ready. After this tag is updated, the calculation proceeds with the rest of the objects which perform the actual calculations.

In the current demonstration, the user interface program which handles the interactive screens and the communications to the simulation program is implemented using the object oriented design. In FY 1989, the smart sensor and performance monitor will be added using this design. The continuous controls and mode selector functions are currently implemented within the simulation program as in-line FORTRAN code. In FY 1989, these functions will be converted to the object oriented design to make the structure consistent throughout the control system.

The communications between the tasks uses a communications protocol that is analogous to passing information by putting messages on a blackboard or bulletin board. Each task or program reads its input data from the appropriate locations on the board and writes its output data in

a specific, named area of the board. Only one task can write to an area of the blackboard. A task can read from any area of the board. Hence, the name of the area is associated with the calculating program. The data on the blackboard are each named with a composite name that identifies the major task, calculation type, variable type, and location (e.g., smartsensor_median_ temp_ SGDCA or perfmon_status_fwhtr_1A). The tasks read and write to the message area using standard communications utilities in UNIX called Remote Procedure Calling (RPC).

8. CONCLUSIONS

A prototype of an advanced control system for the PRISM feedwater system has been designed. The system illustrates the capabilities of a highly automated control system which diagnoses faults, automates operating procedure, and uses advanced control algorithms. The design of control logic uses a minimum of three independent tests in conjunction with a two-out-of-three rule to identify failures and mode changes. The design description lists the tests that provide independent indications for identifying sensor failures, process component failures, and mode changes.

A process simulation model of the feedwater system has been developed using MMS modules. The model was used to provide simulated signals for the plant measurements to the control system and to calculate the system response to control actions. The model was also used to calculate linearized system matrices for use in the modern control design calculations.

Several level control algorithms for the feedwater system heaters, condenser, deaerator, and steam generators have been designed and tested on the process simulation. Modern control design techniques have been shown to provide sound control designs with a minimum of iteration and tuning.

Interactive graphics which simulate the control room interface have been designed to illustrate the operator's perspective on the feedwater control system. The interactive computer program provides an environment in which the program sponsors, outside experts, and potential users of the technology can see the conceptual design in operation.

A software architecture to implement the control system has been developed. The architecture promotes self-documentation and easy expansion through a simple modular structure.

9. REFERENCES

1. Modular Modeling System (MMS): A Code for the Dynamic Simulation of Fossil and Nuclear Power Plants, Computer Code Manual, Babcock and Wilcox Company, Lynchburg, Virginia, March 1985.

2. MMS-EASE+: A Pre- and Post-Processor for the Modular Modeling System (MMS), User's Guide, Babcock and Wilcox Company, Lynchburg, Virginia, June 1985.

3. B. Upadhyaya, T. Kerlin, and K. Holbert, "Development of Integrated Signal Validation System at the University of Tennessee and Applications to Operating Power Plants," To be presented at the Seventh Power Plant Dynamics, Control, and Testing Symposium, Knoxville, Tennessee, May 15-17, 1989.

4. K. R. Piety, "Statistical Algorithm for Automated Signature Analysis of Power Spectral Density Data," Proceedings of the Second Specialists Meeting on Reactor Noise (SMORN II), Pergamon, New York, 1977, pp. 781-802.

5. G. V. Murphy and J. M. Bailey, Robust Control Technique for Nuclear Power Plants, ORNL/TM-10916, Martin Marietta Energy Systems, Inc., Oak Ridge National Laboratory, March 1989.

6. Bernard Friedland, Control System Design, McGraw-Hill, New York, 1986.

7. T. L. Wilson and W. K. Wagner, "Multivariate Control for the PRISM ALMR," To be presented at the Seventh Power Plant Dynamics, Control, and Testing Symposium, Knoxville, Tennessee, May 15-17, 1989.

8. Matrix_x User's Guide, Integrated Systems, Inc., Palo Alto, California, October 1985.

9. J. D. Birdwell, J. R. B. Cockett, R. E. Bodenheimer, and G. Chang, The CASCADE Final Report: Volume II-- CASCADE Tools and Knowledge Base, Electrical Engineering Department, The University of Tennessee, Knoxville, February 19, 1988.

INTERNAL DISTRIBUTION

1. J. L. Anderson
2. S. J. Ball
3. C. R. Brittain
4. N. E. Clapp
5. B. G. Eads
6. C. E. Ford
7. D. N. Fry
8. H. E. Knee
9. J. E. Jones Jr.
10. R. A. Kisner
11. P. J. Otaduy
12. J. T. Robinson
13. R. L. Shepard
14. B. R. Upadhyaya
15-19. J. D. White
20. T. L. Wilson
21. R. T. Wood
22-23. Laboratory Records
24. Laboratory Records-RC
25. I&C Division Publications Office

EXTERNAL DISTRIBUTION

U.S. Department of Energy, Washington, DC 20545

27. R. J. Neuhold, Director, Division of Advanced Technology Development, NE-462
28. B. J. Rock, Director, Office of Technology Support Programs, NE-46
29-30. DOE Office of Scientific and Technical Information, P.O. Box 62, Oak Ridge, TN 37831
31. D. Carroll, General Electric Company, Nuclear Systems Technology Operation, P.O. Box 530954, San Jose, CA 95153-5354
32. Y. Dayal, General Electric Company, Nuclear Systems Technology Operation, P.O. Box 530954, San Jose, CA 95153-5354
33. W. K. Wagner, General Electric Company, Nuclear Systems Technology Operation, P.O. Box 530954, San Jose, CA 95153-5354
34. H. P. Planchon, Argonne National Laboratory, 9700 South Cass Avenue, Argonne IL 60439
35. J. I. Sackett, Argonne National Laboratory, 9700 South Cass Avenue, Argonne, IL 60439
36. J. W. Cooke, Energy Programs Division, Department of Energy, Oak Ridge Operations, P.O. Box 2001, Oak Ridge, TN 37831-8610