ornl

ORNL/TM-11422

MARTIN MARIETTA ENERGY SYSTEMS LIBRARIES

3 4456 0329173 8

OAK RIDGE NATIONAL LABORATORY

MARTIN MARIETTA

A Personal Radio-Frequency Dosimeter With Cumulative-Dose Recording Capabilities

R. W. Rochelle
M. R. Moore
R. S. Thomas
P. D. Ewing
R. A. Hess
B. S. Hoffheins

OAK RIDGE NATIONAL LABORATORY
CENTRAL RESEARCH LIBRARY
CIRCULATION SECTION
4500N ROOM 175
LIBRARY LOAN COPY
DO NOT TRANSFER TO ANOTHER PERSON
If you wish someone else to see this report, send in name with report and the library will arrange a loan.

OPERATED BY
MARTIN MARIETTA ENERGY SYSTEMS, INC.
FOR THE UNITED STATES
DEPARTMENT OF ENERGY

This report has been reproduced [illegible] available copy.

Available to DOE and DOE [illegible] Office of Scientific and Technical Information, P.O. Box [illegible] Oak Ridge, Tenn. (615) 576-8401, FTS 626-8401.

Available to the public from the National Technical Information Service, U.S. Department of Commerce, 5285 [illegible] Springfield, Va. [illegible]

This report was prepared [illegible] agency of the United States Government. Neither the United States Government nor any agency thereof, nor any [illegible] makes any warranty, express or implied, or assumes any legal liability or responsibility for the accuracy, completeness, or usefulness of any information, apparatus, product or process disclosed, or represents that its use would not infringe privately owned rights. Reference herein to any specific commercial product, process, or service by trade name, trademark, manufacturer, or otherwise, does not necessarily constitute or imply its endorsement, recommendation, or favoring by the United States Government or any agency thereof. The views and opinions of authors expressed herein do not necessarily state or reflect those of the United States Government or any agency thereof.

ORNL/TM-11422
Dist. Category UC-406,
Engineering, Equipment, and Instruments

Instrumentation and Controls Division

A PERSONAL RADIO-FREQUENCY DOSIMETER WITH CUMULATIVE-DOSE RECORDING CAPABILITIES

R. W. Rochelle
M. R. Moore
R. S. Thomas
P. D. Ewing
R. A. Hess
B. S. Hoffheins

Date Published: JANUARY 1990

Prepared for the
DEPARTMENT OF NAVY
Naval Air Systems Command
AIR-5161
Washington, D.C. 20361

Prepared by the
OAK RIDGE NATIONAL LABORATORY
Oak Ridge, Tennessee 37831
operated by
MARTIN MARIETTA ENERGY SYSTEMS, INC.
for the
U.S. Department of Energy
under Contract No. DE-AC05-84OR21400

MARTIN MARIETTA ENERGY SYSTEMS LIBRARIES

3 4456 0329173 8

CONTENTS

	Page
LIST OF FIGURES	v
LIST OF TABLES	vii
ABSTRACT	ix
EXECUTIVE SUMMARY	xi
1. INTRODUCTION	1
2. BIOLOGICAL BACKGROUND	3
3. LITERATURE RESEARCH	4
4. FAMILIARIZATION WITH EXISTING PROBES	5
5. SENSOR DEVELOPMENT	6
6. SYSTEM HARDWARE DEVELOPMENT	8
6.1 Microprocessor Description	8
6.2 System Architecture	9
6.3 Powerdown Circuit	9
6.4 Power Supply	12
7. SOFTWARE DEVELOPMENT	13
7.1 Language and Firmware Selection	13
7.2 Code Development	14
7.3 Program Operation	16
8. PACKAGING	19
9. READOUT INTERFACE UNIT	23
10. TESTING AND EVALUATION	26
10.1 Testing	26
10.2 Evaluation	26
11. CONCLUSIONS	28
ACKNOWLEDGMENTS	29

Page

REFERENCES 30

APPENDIX A. SOURCE CODE FOR PERSONAL RF DOSIMETER 31

APPENDIX B. CONSTRUCTION OF DIPOLE ANTENNAS 45

APPENDIX C. CHECKOUT OF DIPOLE ANTENNAS 53

APPENDIX D. CHECKOUT OF RF DOSIMETER 57

LIST OF FIGURES

Figure		Page
1.	ANSI-derived equivalent permissible exposure limits	1
2.	Rf dosimeter system block diagram	10
3.	Schematic diagram for rf dosimeter	11
4.	Structure chart of program flow	18
5.	Assembled rf dosimeter	20
6.	Antenna-cover support for rf dosimeter	21
7.	Antenna cover for rf dosimeter	21
8.	Insulator pad for rf dosimeter	22
9.	Schematic diagram for readout unit	24
10.	Readout unit	25
11.	Frequency response of rf dosimeter	27
B.1.	Bottom view of antenna assembly	49
B.2.	Top view of dipole substrate	51
C.1.	Test setup for orthogonal antennas with filter	55
C.2.	Filtering box	56
D.1.	Test setup	60

LIST OF TABLES

Table		Page
1.	Task breakdown for rf dosimeter	2
2.	System monitor command menu	15

ABSTRACT

The radio-frequency (rf) dosimeter developed by the Oak Ridge National Laboratory is a portable, pocket-sized cumulative-dose recording device designed to detect and record the strengths and durations of electric fields present in the work areas of naval vessels. The device measures an integrated dose and records the electric fields that exceed the permissible levels set by the American National Standards Institute. Features of the rf dosimeter include a frequency range of 30 MHz to 10 GHz and a three-dimensional sensor. Data obtained with the rf dosimeter will be used to determine the ambient field-strength profile for shipboard personnel over an extended time. Readings are acquired and averaged over a 6-min period corresponding to the rise time of the core body temperature. These values are stored for up to 6 months, after which the data are transferred to a computer via the dosimeter's serial port. The rf dosimeter should increase knowledge of the levels of electric fields to which individuals are exposed.

EXECUTIVE SUMMARY

In an effort to assess the radio-frequency (rf) electric fields present on the decks of naval vessels and their long-term effects on shipboard personnel, an rf dosimeter with cumulative-dose recording capabilities was developed at the Oak Ridge National Laboratory. The major objective of the development effort was to quantize the level and duration of rf fields present in the work areas of shipboard personnel. Readings, given in units of milliwatts per square centimeter (mW/cm^2), that exceed the permissible levels set by the American National Standards Institute are recorded and used to produce a profile of the dosimeter wearer over a specified period of time.

The rf dosimeter's design features include a frequency range of 30 MHz to 10 GHz, a sensitivity range of 1 to 1000 mW/cm^2, an omnidirectional response to the electric field strength, a frequency response that approximately emulates that of the human body, and a lifetime of ~6 months on a single battery without service. The instrument should give a history of dosages that the wearer is exposed to over a period of time without battery changes or memory collection. After the collection period, the contents of the memory are transferred to a personal computer via an interface circuit, where the values can be processed and evaluated.

The instrument includes an antenna system based on resistively tapered dipole antennas, developed at the National Institute of Standards and Technology (NIST), that use a very small Schottky beam-lead diode as the sensing element. Three of these dipole antennas in an orthogonal configuration have a sensitivity that is approximately omnidirectional and relatively flat with frequency over a large portion of the instrument's range. Also developed by NIST, and used on this instrument, are highly resistive traces fabricated on the same substrate as used for the dipole elements. These leads are essentially transparent to the electromagnetic fields being measured and help isolate the antennas from the recording circuitry housed in a metallic case.

The instrument also includes a microprocessor unit that processes the voltage levels from the Schottky beam-lead diodes. This is accomplished through on-board analog-to-digital converters that pass the information to the arithmetic processing units. The microprocessor is programmed to calculate the sum of these readings and the average power incident upon the antenna system. After the readings are stored in memory, the instrument is powered down until time for the next reading. Since average energy values are desired, the microprocessor can "sleep" and save battery power, while the capacitance of the high-resistance leads and discrete capacitors of the sensor circuit continues to save the average value of energy present.

The remainder of the system consists of the memory, latches for the addresses, a lithium battery, a readout port, and various discrete components. The memory and the battery were chosen for their size and energy efficiency. The readout port chosen was a small modular telephone jack, since only four connecting lines were needed to transfer the information from the memory to a personal computer. The remaining circuitry performs functions such as timing, filtering, and power regulation that allows for optimum use of the battery.

After electric field readings are acquired and stored for up to 6 months, the data values are transferred from the instrument to a computer for processing and evaluation.

From the collected data, conclusions can be drawn about the nonionizing radiation environment that the wearer has been exposed to during the trial period. The instrument then can be used again by simply replacing the battery and resetting the recording software.

1. INTRODUCTION

In an effort to assess the radio-frequency (rf) electric fields present on the decks of naval vessels and their long-term effects on shipboard personnel, a portable, pocket-sized rf dosimeter with cumulative-dose recording capabilities was proposed. The major objective of the proposed rf dosimeter was to develop an instrument capable of quantizing the level and duration of electric fields present in the work areas of shipboard personnel. Readings from the rf dosimeter can be compared to the permissible American National Standards Institute (ANSI) power-density levels and can be used to produce a profile of the wearer over a specified time. The ANSI-derived permissible exposure limits are shown in Fig. 1.

The proposed specifications for the rf dosimeter included a sensitivity range of 1 to 1000 mW/cm^2, an audible alarm for fields greater than 8 mW/cm^2, integration of dosage for later readout, autoranging capability, and possibly self-powering capability. Taking an analytical approach to the design process, the effort was partitioned into manageable tasks. The breakdown of the tasks is shown in Table 1. The tasks are discussed individually in Sects. 3 through 10.

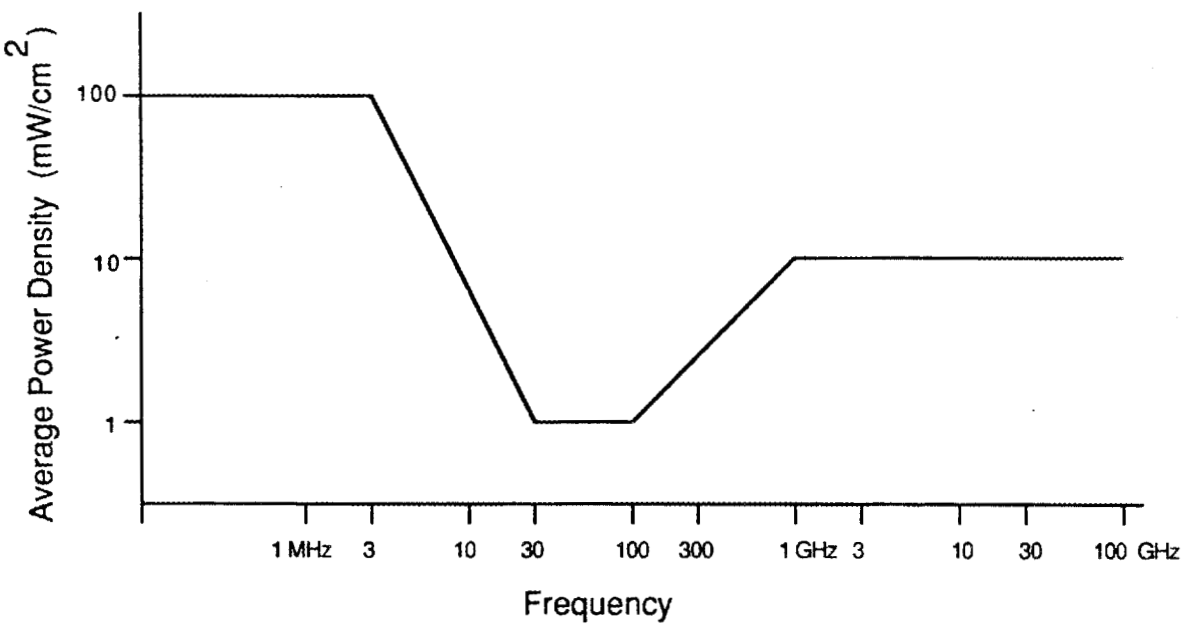

Fig. 1. ANSI-derived equivalent permissible exposure limits.

Table 1. Task breakdown for rf dosimeter

Task	Description
1	Literature research
2	Familiarization with existing probes
3	Sensor development
4	System hardware development
5	Software development
6	Packaging
7	Readout interface unit
8	Testing and evaluation

2. BIOLOGICAL BACKGROUND

The biological effects of nonionizing radiation from electric fields were researched to determine which electromagnetic parameters actually affect the human body. Kaplan (et al.) addresses statements of some Soviet literature that irradiation at or below 10 mW/cm^2 alters the heart rates of humans and animals.[1-5] Kaplan shows results that disclaim that heart rates are affected at power-density levels below 10 mW/cm^2. Additional results also indicate that thermal burden occurs at power densities far below that required to produce a change in heart rate. Grandolfo (et al.) states that since the time constant needed to cause the rise in core body temperature is inversely proportional to the square of the field strength, the average power is the necessary parameter to be measured.[6] In other words, pulsed fields have no more effect on heart rates than continuous fields of the same average power.

Other literature was researched to determine the levels that burden the human body. According to Michaelson, the threshold for direct heat activation of blood supplying the hypothalamus is an increase of 5 to 6°C.[7] In mammals the central nervous system ceases to function at 44 to 45°C, and the heart stops beating at 48°C. A rise in temperature of 5°C causes a twofold to threefold increase in pulse rate and oxygen consumption. Sensations occur when there are changes in temperature of a few thousandths of a degree in a second.

Another note of interest is the background radiation that naturally exists compared with the power-density limits set by ANSI. For a "quiet" sun, the integrated flux of frequencies below 300 GHz is $\sim 1.4 \times 10^{-8}$ mW/cm^2; bursts and sunspot activity can drive this value up to $\sim 1 \times 10^{-6}$ mW/cm^2. Also, earth blackbody radiation is $\sim 3 \times 10^{-4}$ mW/cm^2 when integrated over all frequencies under 300 GHz. In contrast, the permissible ANSI limits are established at levels of 1 mW/cm^2 for the range of 30 to 100 MHz and at higher levels for other frequency ranges over which the body does not absorb energy as efficiently.

3. LITERATURE RESEARCH

The literature research was accomplished with library services and individual research by the investigators. The research conducted through the library services was concentrated in the areas of existing dosimetry and the biological effects of rf fields on the human body. The biological effects were examined to ensure that the most pertinent fields were being measured. The main concern was rf fields that cause an excessive rise of core body temperature.

After determining that the fields causing elevation of core body temperature were the main concern, the different methods of measuring these fields were investigated. The research included instruments based on many different sensitivity ranges, response times, and physical phenomena. Based on the proposed specifications, the need for a relatively fast response time (able to respond to pulsed radar fields), and the small package size required, an rf dosimeter employing electrically short dipole antennas and rectifying diodes was chosen.

Individual research then was undertaken to determine what past work had been done with electrically short dipole antennas. The main areas of interest were the methods of manufacturing an antenna with a resistance that varied with length and the methods of loading the feed point of the antenna to obtain the desired frequency response. From this research, a design based on the dipole antenna developed by the National Institute of Standards and Technology (NIST) was adopted.[8]

After choosing the basic antenna design, the rectifying diode had to be selected. The research in this area was aimed at selecting a diode small enough to fit in the center of a relatively small dipole antenna and sturdy enough to withstand the high voltages that might be present at its terminals. Other considerations included sensitivity and costs. A small Schottky beam-lead diode (HP 5082-2837) was chosen. This diode has a minimum breakdown voltage of 70 V.

Not only did the rectifying electronics have to be determined, but the processing unit had to be selected also. For prototyping purposes, the Intel 80C196 microprocessor was chosen. This microprocessor was determined to be the best for reducing design time because of its built-in analog-to-digital (A/D) converter and eight-channel multiplexer.

After determining what methods and devices existed, the experimentation and development effort was initiated. However, individual research of library articles was continued to ensure that existing technology was used.

4. FAMILIARIZATION WITH EXISTING PROBES

The specifications for the antenna system chosen included measuring the magnitude of the electric field, an omnidirectional response, a frequency range of 30 MHz to 10 GHz, a frequency response either flat or equivalent to the human body's response, and a sensitivity range of 1 to 1000 mW/cm^2 or equivalently 61 to 1941 V/m. A design paper by Larsen and Ries of NIST discusses the trade-offs of different sensing phenomena.[9] The five types listed in the paper are color change in liquid crystals, resistance change of a lossy dielectric, glowing gas probes, incandescent bulb probes, and thermocouple sensor probes. These sensing phenomena were determined to be insufficient because of poor response times, unsuitable sensitivity range, susceptibility to ambient temperature, and other problems. Based on the Larsen and Ries paper and other materials, a system of electrically short dipole antennas arranged orthogonally was determined to be the most feasible.

The three short dipole antennas arranged orthogonally not only meet the stated criteria but also seem the easiest to implement. Since the antennas have to be electrically short at all frequencies of interest, they are small enough to place in (or on) a small appendage to the microprocessor housing. Dipole antennas do not require special handling as do gas or liquid probes. Also, the dipole antennas are not very susceptible to high-voltage fields or ambient temperature changes. Thus, the dipole antennas were found to be the hardiest and most suitable sensing probe.

After choosing the basic sensing phenomenon, the exact implementation had to be determined; basic testing of the small dipole antennas then was undertaken. Many tests were performed on small (a few centimeters in length) wire dipole antennas with a diode at the feed point and a digital voltmeter placed across the diode. The leads connecting the voltmeter and the diode had to be highly resistive and include filtering to prevent the lead wires from disturbing or receiving the rf fields. Primitive tests first were conducted to determine what orders of magnitude of sensitivity could be obtained with a relatively flat frequency response. For a 5-cm dipole, voltages of a few tens of millivolts were obtained when normalized to a 1-V/m field, while a 28-cm dipole produced readings of 100 to 200 mV/(V/m). These values were obtained at frequencies lower than the resonant frequency. Thus, as expected, there was found to be a great reduction in sensitivity with reduction in length.

Not only were different lengths compared, but different impedance values at the antenna terminals also were tried. This idea was pursued based on information found in a paper by Tang and Gunn.[10] This paper concludes that the resonant peaks of the frequency response can be reduced by resistive loads and shifted (reduced or increased) by capacitive or inductive loads. These loadings were implemented in an attempt to extend the useful frequency range of a given antenna. The tests showed that the resistive loadings did reduce the resonant peaks and that the capacitive loadings reduced the amplitude and frequency value of the resonant peak. Not only did these tests help to determine the needed loadings for the desired response, but they also helped in modeling the effects of the diode on the antenna terminal impedance.

5. SENSOR DEVELOPMENT

After completing the literature research and initial experiments, the resistively tapered dipole antenna discussed in the Kanda and Driver paper was chosen.[8] The resistive taper allows the antenna to be longer and therefore more sensitive, without producing the resonances that occur on the standard conducting antenna. The mathematical basis for this design was developed by Wu and King.[11] Basically, the antenna incorporates the concept that the vector wave equation has outgoing waves only in its solution if the impedance is allowed to vary exponentially with length. Thus, the reflections that produce the standing waves are not present.

Following NIST guidelines, a thick-film sensor design was derived from the similar thin-film probe developed by Kanda and Driver.[8] Thick-film methods were selected because design and manufacturing costs could be minimized. The thick-film manufacturing could be performed at Oak Ridge National Laboratory (ORNL) to give more flexibility in altering designs and in the design process. Also, there was a significant difference in the cost of the two methods. A commercial thin-film probe costs ~$1500; however, a set of three dipole antennas could be fabricated at ORNL for less than $200 using the thick-film process. The size of the circuit elements and the type of thick-film materials were chosen to maximize sensitivity and maintain the required bandwidth while confining the probe to a small substrate area.

Two modifications had to be made to the original thin-film design.[12] First was the incorporation of twisted high-resistance leads. Because thick-film technique dictates wider spacing between the leads, the loop area becomes larger and can increase the inductance along the length of the leads. The resulting inductive coupling can be canceled by an effective twisting of the leads. With proper layout, this was accomplished rather easily with a single crossover layer. Second, the dipole antenna design requires a geometrically sharp tip. Given the small overall dimensions, larger variations could arise from the location of the pattern relative to the screen mesh. To minimize process sensitivity as well as enhance resistive tapering, a high-resistance strip 3 mm long was printed underneath the dipole tips.

Eight dipole antenna circuits were printed on a scored alumina substrate. The circuits were printed in four layers, which were fired individually. All four layers were printed using a 325-mesh screen. The first layer was a gold/platinum conductor (DuPont 9885), which formed the pads for diode attachment between the dipole elements, external leads at the other end of the substrate, and short paths for the crossovers in the twisted high-resistance leads. The second layer was a dielectric (DuPont 9950), which insulated the crossover points in the twisted leads. The third layer was a 10-kΩ/sq resistor (DuPont 1741), which formed the twisted high-resistance leads along the length of the substrate to the center of the dipole antenna. This layer also included two narrow strips at the tips of the dipole antenna to effectively increase the resistive tapering effect. The fourth layer was a 10-Ω/sq resistor (DuPont 1711), which formed the actual dipole elements consisting of short, tapering triangles set at a 54.7° angle to the twisted leads. (This angle was calculated to allow the dipole antennas to be orthogonal to each other when three dipole planes are mounted 60° apart in a triangular tube.)

The fine-line resolution required by the antenna design was somewhat greater than normal thick-film capabilities, but for this development project a lower than average

yield could be tolerated.[13] The small size of the circuit lines strained the limits of normal thick-film practice; however, with careful alignment of the screens a 75% yield was achieved during prototype productions.

The antenna fabrication was completed with the attachment of the surface mount components. A Schottky beam-lead diode (HP 5082-2837) was attached with conductive epoxy to the center of the dipole antenna. The original substrate was lengthened to accommodate leads to the recording circuitry by bonding (with clear epoxy) a short piece of alumina substrate to the end of the sensor opposite the dipole elements. A 0.47 μF ceramic capacitor was positioned between the external leads to integrate the signal over longer times and to reduce power consumption by decreasing the need to sample data frequently. Three identical dipole antennas were epoxied together to form a triangular tube, thus completing the geometry for orthogonal dipole antennas. The finished size of the triangular tube was 33 mm long by 10 mm high.

6. SYSTEM HARDWARE DEVELOPMENT

The hardware for the rf dosimeter parallels in function the hardware for an electric field-strength meter. Early field-strength meters were analog, and only the instantaneous field-strength was displayed on the meter. The advent of the microprocessor and its computational capability allowed the use of more sophisticated algorithms in processing the data measurements. With this new capability, it became possible to compute the average value of the intensity over a given time and to store only the average value at periodic intervals.

The maximum frequency for operation of the microprocessor is 12 MHz. The minimum frequency, as stated in the Intel specifications, is 3.5 MHz. The operating frequency chosen was 3.579545 MHz. A crystal of this frequency is common and commercially available because it is used in almost all computer keyboards as well as for the color subcarrier oscillator in television sets. It was desired that the computer operation be at the low end of the range since speed is not a factor. The power consumption is directly proportional to the frequency of operation; therefore, a fixed amount of energy is required to execute a fixed number of instructions. It seemed desirable to have all three antennas sampled at nearly the same time so that the square root of the sum of the squares would represent the magnitude of the electric field. This required that the microprocessor be put into a powerdown mode immediately after sampling the three antennas in order to save battery energy. It has since been learned from recent updates in Intel's specifications that the microprocessor will operate at less than 1 Hz in frequency. The microprocessor is essentially a static part.

6.1 MICROPROCESSOR DESCRIPTION

Within the past two years, the Intel Corporation has produced a powerful complementary metal-oxide semiconductor (CMOS) microprocessor that combines both analog and digital functions on a single chip. The chip includes a 10-bit A/D converter coupled with an eight-channel multiplexer on the input to the microprocessor. The microprocessor has a very powerful instruction set that includes multiplication and division instructions. It also has a built-in communications port for uploading and downloading data. And most importantly, it can be put into a powerdown mode when computations are no longer necessary, conserving the battery supply. The chip has a 256-word internal memory for temporary storage and for pointers to external memory. The instructions are 16-bit and can be stored in either a 16-bit word or 8-bit bytes. To hold down the chip count, the 8-bit mode of operation was chosen. This requires slightly more energy to execute some instructions but is well worth the penalty since only a single electrically programmable read-only memory (EPROM) program storage chip is needed. The EPROM is an 87C257 that has the unique feature of not requiring the addresses from the microprocessor to be latched because latches are built internal to the chip. A latch is required for the random-access memory (RAM), so this feature is wasted for this implementation. Shortly, static RAMs will be available that have this same feature, so no latch will be required in future designs. This would reduce the total integrated circuit (IC) chip count to three. Intel has announced that within the near future the 80C196 microprocessor will be available with either 8 Kbytes of EPROM or

read-only memory (ROM). This would bring the total IC chip count down to two, further reducing the total pin count. A reduced pin count can lead to higher reliability, smaller circuit size, and lower fabrication cost.

6.2 SYSTEM ARCHITECTURE

The system block diagram is shown in Fig. 2. The sensor consists of three short dipole antennas connected directly to the multiplexed input of the A/D converter. Three internal registers accumulate the square of the field intensities (256 values) measured at periodic intervals by the three orthogonal antennas. At the end of a prescribed period (typically 2 min), the three registers are added together and the square root taken. This value, which is the average magnitude of the electric field strength over the prescribed period, then is placed in RAM for storage and readout. The RAM chosen for this memory is a Toshiba TC5565APL-15L, which is an 8-Kbyte static RAM. This RAM allows the storage of 4096 16-bit numbers. The circuit board is also wired for a 32-Kbyte chip, such as the TC55256PL-15, which gives four times the memory capacity. This memory chip was not available when the memory was purchased.

The program is stored in a 32-Kbyte CMOS EPROM. The memory capacity of this chip is more than adequate for this task, leaving room for the addition of more sophisticated programs for self-testing and calibration. To change the program, the chip must be erased with an ultraviolet light source and then be electrically reprogrammed in a programmable read-only memory (PROM) burner. The new flash EPROMs would be ideal for this application since they can be erased and programmed while connected in the circuit. There are still several features that these new EPROMs do not have that are necessary for this application. An internal universal asynchronous receiver/transmitter (UART) provides access to an external computer through the serial data link.

6.3 POWERDOWN CIRCUIT

One key feature of the rf dosimeter is the powerdown circuit. This circuit allows the unit to operate for extended periods without battery replacement. The circuit is developed on the premise that the microprocessor can be inactive while rectification is taking place on the diodes at the center points of the dipole antennas. Even if the electric field on the antennas comes from a pulse-modulated signal, the direct current (dc) voltage on the antennas will represent the average field on the antennas. The time constant for the discharge of the antennas is 1.38 s.

The schematic diagram for the rf dosimeter is shown in Fig. 3. Upon reset or startup, the microprocessor (U1) produces an external signal on the clockout (CLKOUT) pin consisting of a square-wave version of the clock oscillator signal. The square-wave low and high are 0 and 5 V, respectively. Diode D1 conducts on the negative cycle of the CLKOUT signal lowering one side of capacitor C7 to 0.6 V. Diode D1 and capacitor C7 also are connected to the external interrupt (EXTINT) pin of the microprocessor. This pin is programmed to cause the microprocessor to exit the powerdown mode when it receives a "high." As long as the oscillator is operating, this

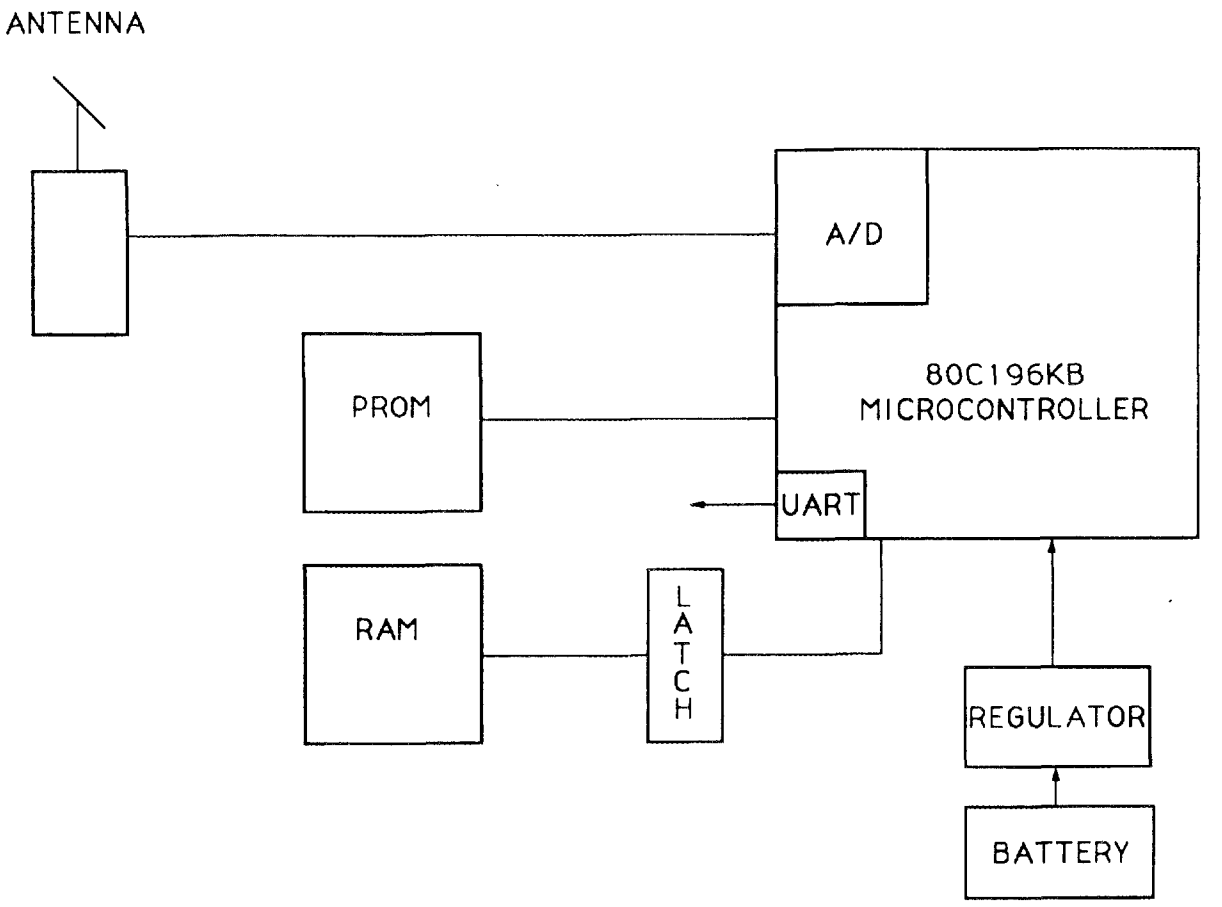

Fig. 2. Rf dosimeter system block diagram.

pin is held low. When the oscillator stops after a powerdown instruction is executed, the discharge of capacitor C7 through resistor R5 on pin 15 causes a high, thus resetting the microprocessor.

The CLKOUT signal also is rectified by diode D2. The result charges capacitor C6 down near ground and provides a low signal on pin 1 of the latch (U2), which takes the microprocessor out of the standby condition. This lead also is connected to the source pin of transistor U5A, which allows the microprocessor to enable one of the two memory chips. When the CLKOUT signal is lost because of the execution of the powerdown instructions, all three of these chips are put in the powerdown standby mode.

After each of the voltages on the three antennas has been sampled and stored in the internal register file, a powerdown instruction is executed. This instruction powers down the microprocessor to less than 10 μA of current from the battery. The clock is stopped so that the CLKOUT signal goes to +5 V. Diode D1 no longer conducts, and capacitor C7 discharges up to +5 V. At some point, the EXTINT pin passes a threshold, and the interrupt occurs. This resets the microprocessor causing it to come out of the powerdown mode. The oscillator starts, and the CLKOUT signal reappears. Capacitor C7 is recharged so that a low appears on the EXTINT pin and the

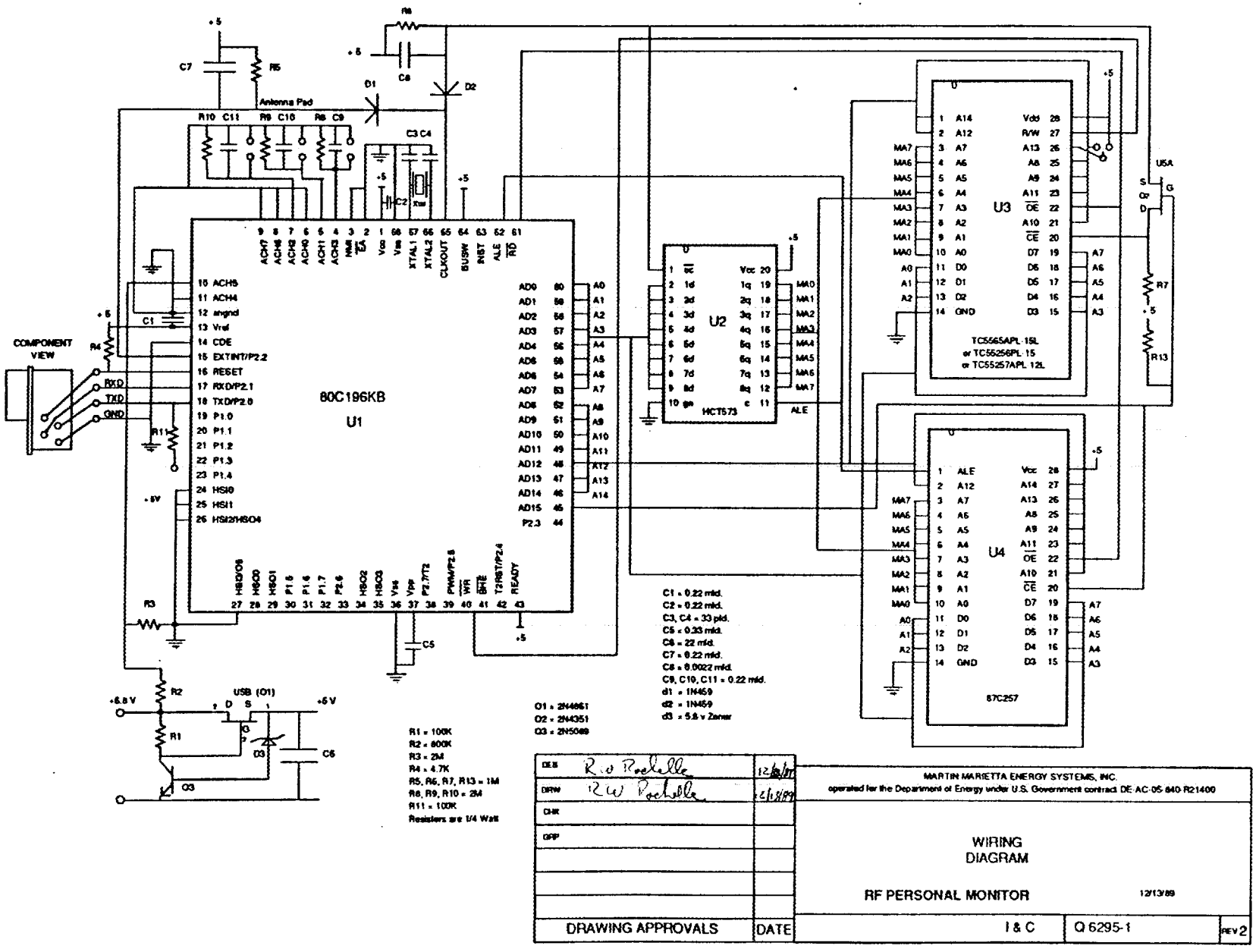

Fig. 3. Schematic diagram for rf dosimeter.

microprocessor starts executing the program at the next instruction after the powerdown instruction.

Taking a set of readings from the three antennas requires ~0.5 ms. The sampling time is 58 ms as set by resistor R5, capacitor C7, and the restart threshold. This means that the microprocessor is off for over 100 of the "on" periods, thus extending battery life by a factor of greater than 100. Since the antenna time constant is 1.38 s, adequate samples can be taken during the discharge of the antenna capacitor.

6.4 POWER SUPPLY

The energy-to-weight ratio of the lithium battery is far greater than that of other available batteries, and the cost is reasonable. A typical battery with a capacity of 5000 mA·h has an energy-to-weight ratio of 144 Wh/lb. The new lithium batteries are no longer corrosive and thus are highly safe. They have a wide operating temperature range and a shelf life of 10 years. For these reasons, the lithium battery was selected to power the rf dosimeter, and a two-cell, 6-V model was chosen. This model has the advantage of wide distribution since it is used to power small portable computers. A disadvantage of the lithium battery is the relatively poor voltage regulation. The open-circuit voltage of the two-cell battery is 6.8 V. Because the microprocessor will be going into powerdown mode, the battery voltage will fluctuate between essentially no-load value and full-load value. The microprocessor operates between 4.5 and 5.5 V. Thus, a regulator had to be designed to prevent the no-load voltage from exceeding the supply specifications of the microprocessor. Zener diode D3 translates the output voltage to the base of transistor Q3. This controls the gate voltage of an n-channel junction field-effect transistor (JFET) connected between the battery and the load. If the load being removed causes the battery voltage to increase, Q3 will turn on. The Q3 collector voltage will decrease, reducing the gate voltage of the JFET and consequently the output voltage. Input-voltage swings from 5 to 7 V will cause the output to change from 4.88 to 5.26 V, which is well within the microprocessor specifications.

7. SOFTWARE DEVELOPMENT

The antenna system was designed to mate with a microprocessor, and the Intel 80C196 was chosen as the central processing unit (CPU) to be used during development. The necessary software for receiving inputs from the antenna system and for processing and storing the data had to be developed. This software was written in 8096 assembly language and was ported to the CPU through an Allen Systems FX-97 prototyping board.* The board was used to interconnect the CPU with extra memory storage, analog inputs, and a display unit for testing purposes. The display unit consisted of an inexpensive hand-held calculator to display the outputs and to house part of the circuitry.

The programming tasks included interfacing the CPU with the other components and processing the data. The normal operation of the rf dosimeter included sampling the A/D converters, calculating the magnitudes of the electric field strength, averaging these magnitudes over a 2-min period, storing the results, and sending outputs to the display. For testing purposes, the average was shortened to 2 s to increase the sampling rate.

Another important feature of the software was the capability to enable the powerdown mode. This included placing the CPU in a low-power operating mode that used only ~10 μA of current and received a signal every 50 ms that restarted the normal operating sequence. A resistor-capacitor (RC) circuit was used to provide the restarting signal. Including this feature reduced power consumption by ~97% over a given period. This method was chosen over the option of having the CPU turn on only when significant fields were present because this method yielded a more predictable life span for the instrument.

7.1 LANGUAGE AND FIRMWARE SELECTION

At the beginning of the project, one goal was to use the highest-order computer language available for the selected microprocessor. In general, this yields the maximum use of the programmer's time. After the 8096 family of microprocessors was selected, the search began for a development system. The choice was narrowed down to an Allen Systems 8097-based, single-board computer with editors and cross compilers for assembly language and Pascal. The optimum choice of language was C, but this was not available for the Allen System. FORTH was considered since there are many FORTH-experienced people within ORNL. The Allen System was selected, however, because of its ease of use and low cost, and it has proven to be very satisfactory for the job. Its only disadvantage is that the assembler cannot tolerate indentations in the source code. This makes reading the structured code difficult.

The higher-order languages allow calls to user-supplied assembly language. This is a necessity in this case because the higher-order languages do not have microprocessor-specific control functions. It was decided to begin writing the code in assembly language

*Allen Systems, 2151 Fairfax Road, Columbus, OH 43221.

so that the microprocessor-specific commands for this new microprocessor could be learned. As the project developed, it never became necessary to use the higher-order language because it was just as easy to call this code in assembly language. The program consists mainly of subroutine calls written in assembly language; most of the calls involve input to or output from the microprocessor. Thus, there is not a great need for the higher-order language for this application. Also, some unique features of this microprocessor were used such as putting it in powerdown mode, which required the use of assembly language.

7.2 CODE DEVELOPMENT

The CA-96 cross-assembler for the Allen Systems computer uses an IBM-compatible personal computer (PC) as the host computer. The package consists of an integrated editor and an 8096 cross-assembler. The program is placed on the hard disk of the host PC. When the program runs, it displays a menu that allows the choice of editing, viewing the assembled program, printing the assembled program, or writing the assembled program to a file. The system monitor software is listed in the technical manual and offers good examples for help in writing subroutines. After a program is written, the file is saved and then cross assembled. If there are errors, they can be corrected by referring to the listed line number and then determining the cause for the error. When the errors have been eliminated, a hexadecimal (hex) file is created and saved on disk. The cross-assembler file is closed, and a communications program is entered on the PC. The single-board computer must be connected to the serial port with the switches set for the correct baud rate and parity. At this point, if all the proper settings have been made, resetting the 8097 will cause a reset message to appear on the display screen. There are now 11 monitor command groups that can be sent to the single-board computer. These are listed in Table 2.

To download a file to the RAM of the FX-97, the command "I" is sent through the communications program. The FX-97 then is primed for reception of a hex file. The communications program is then put in the transmit mode. The SmarTerm 240 program was used.* The transmit mode is entered by typing "Alt-T" and entering the hex file name. The file is sent after two carriage returns are typed. Closing the transmit mode places the operator back into the communications mode with the FX-97 system monitor. The installed program now can be examined or executed. The system monitor allows a convenient way to set breakpoints or to single step the execution of the program. With these tools it was easy to check out all the features of the 8097 processor and to write meaningful code to accomplish the desired tasks.

The software was written in steps. The first step was to check out the A/D converter integral to the microprocessor. Since neither the FX-97 nor the prototype rf dosimeter boards had any kind of readout, a small hand calculator was interfaced to the output port of the 8097. The digital readout on the calculator allowed the digital presentation of the analog input voltage into the A/D multiplexer. The initial

*SmarTerm 240, Persoft, Inc., 465 Science Drive, Madison, WI 53711.

Table 2. System monitor command menu

Command group	Description
B	Breakpoint commands
Esc	Abort execution command
G	Go (start execution) commands
I	Intel ASCII hex download
M	Memory/examine/change commands
O	One instruction execute (single step)
P	Program counter/Program Status Word (PSW) commands
R	Reset FX-97 command
S	Stack pointer
T	Trace command
Z	Primitive go command

presentation showed the binary (bin) number of the A/D converter from zero to 1023. Later, the program was modified to display the input voltage in four decimal digits.

Next, a wire-wrapped version of the target computer was fabricated. In this model the 80C196KA microprocessor was used, which is a CMOS version of the 8097. Getting this microprocessor to run correctly was perhaps the most difficult part of the project. The 80C196 specification manual implied that the same type of reset circuit should be used as on the 8097 n-channel metal-oxide semiconductor (NMOS) microprocessor. This turned out to be false because the 80C196 will not reset if the slope of the reset signal is not extremely steep. Removing the recommended capacitor from the reset line caused the unit to perform perfectly. A printed-wiring version was made, and when the capacitor was removed from the printed-wiring version it performed as expected. At this level of troubleshooting it is almost mandatory to have a logic analyzer available. This instrument aided in determining that the reset circuit was at fault.

In the wire-wrapped and the printed-wiring prototype versions, the program was put into EPROM rather than RAM, as in the development board. Upon reset, the program is entered and starts immediately. In the beginning, a two- or three-line program was loaded in EPROM. This made it easy to check for wiring errors or problems such as the reset rise time. It is easy to load EPROM provided a good quality EPROM programmer is available. The project was fortunate to have a very good EPROM programmer. In the initial prototypes, the 16-bit mode was used requiring two EPROMs to be programmed for each prototype. The cross-assembler software provides a program that splits the hex file into two files; one contains the even-address bytes, and the other contains the odd bytes. These files are used in the EPROM programmer to produce two EPROMs, which then are placed in the sockets. It was determined that the system worked just as well in the 8-bit mode as in the 16-bit mode. This allowed the elimination of one EPROM.

There is one problem that should be pointed out about the Allen Systems software. When the cross-assembler was written, Intel had produced only the 8096 NMOS pieces. When the CMOS version (80C196) was produced, several instructions were added. These, however, were not included in the Allen Systems cross-assembler,

and one of these instructions (the powerdown instruction) is used in the rf dosimeter program. To work around this problem, two no-operation (no-op) instructions were placed in the assembly-language program where the powerdown instruction was needed. The no-op instruction is FD in hex. When the program is loaded into PROM programmer memory, the two consecutive no-ops are found and replaced by F602 hex. F602 is the machine language for the powerdown instruction.

When writing a program for the 8096 family of microprocessors, several rules need to be followed. The microprocessor contains 256 internal 8-bit register locations. Locations 00 to 19H are special function registers. Some of these must be loaded with specific values for obtaining the desired operation; others act as ports to input and output data. For example, loading 1011B into location 02H will start the A/D conversion on channel 3 of the multiplexer. The most significant bit starts the process immediately if it is a 1 or with a timer if it is a zero. The last three bits determine which channel will be connected to the A/D converter. The 10-bit result appears in this register and also in the next register at location 03H. Appendix A is a listing of an assembled program for the rf dosimeter. The first 19 H locations give the symbol names and their values, which are determined by the pseudo operations (ops). The defined storage byte (DSB) pseudo op allocates the number of bytes found in the operand. Defined storage word (DSW) allocates the number of words found in the operand. The rest of the internal registers from locations 1AH to FFH can be given symbol names and used as registers in the program. All of the instructions that involve two operands require that one of them be from the internal register file. This restriction allows speedy execution while still supporting a powerful addressing concept.

The first 100 H locations in external memory (EPROM) are reserved for Intel's use. The region from 0100H to 1FFEH can be used as program or data memory. This region generally is used to hold the data for messages indicating program progress or errors. In the rf dosimeter program, this area holds the header when the dosimeter is read out with the readout unit. The region from 1FFEH to 2080H is reserved for special tasks and cannot be used for program memory. The user must load location 2018H with the chip-configuration byte before startup or reset. The configuration cannot be changed while the program is executing. For this program the chip-configuration register was loaded with F9H. This enables the powerdown mode as well as the selection of the 8-bit operation.

Upon reset, the microprocessor immediately reads location 2018H, decodes this, and configures the chip to the decoded value. It then starts executing the program beginning at location 2080H, and this process is repeated at every reset. The program begins at the location INIT with the initialization of the stack pointer. The first subroutine call is to location UART to initialize the communications port. The next call is to write the sign-on message. This action is unheeded unless the rf dosimeter is connected through the telephone jack to the readout unit and on to a PC connected through the serial port. The baud rate should be set at 1200 baud with 8-bit, even parity.

7.3 PROGRAM OPERATION

During the initialization phase, RAM that has been storing the averaged readings is dumped to the serial RS-232 line. The communications program in the PC captures

these readings for later evaluation. RAM storing the values has the addresses beginning at location 8000H. Location CX in the internal register file is reserved as a pointer to the place in memory where the next piece of data will be written. Upon initialization this location is sent over the serial link to be displayed under the header. The value of the location tells the operator how much of the memory is filled. The value then is set back to the value 8000H, and the root mean square (RMS) values stored in the memory are displayed. In the dump-memory routine after each word is read, this location is written over with 0FH. This is done so that on startup it is clear that the memory is set and ready to go.

Figure 4 is a structure chart showing the program flow. After the memory is dumped, location FL is loaded with a value of 256, the number of data-point sets that are to be taken and averaged. A data set is three readings of the voltage on each antenna. The values are squared and added into the register HX as a 32-bit word. After 256 repetitions of this, the square root of HX is figured, and this number is stored in RAM starting at location 8000H. The contents of CX are incremented twice after the storage of each word.

Computing the square root of the sum of the squares is the only involved process in the program. The algorithm is rather lengthy, but this allows a faster processing time. The squared value is a 32-bit number; the square root is a 16-bit number. The squared value is shifted left until a carry is detected. The number of shifts is treated like a negative exponent. The number now has been converted into a floating-point number that has a 32-bit magnitude and an 8-bit negative exponent. The next step is to figure the square root of the 32-bit magnitude. The algorithm chosen to accomplish this is to make a best guess of the square root, divide this guess into the magnitude, and then figure the average of the guess and the dividend. This algorithm converges quite rapidly. Five trials are allowed for convergence. The exponent is divided by 2 and used to convert the answer to an integer. This number represents the square root of the sum of 3×256 squares.

At this point the answer is divided by the square root of the number of samples and multiplied by 5 to convert to millivolts. It then is stored in RAM. With storage capability for only 4096 data points, the memory would fill up in 5 days. Most of the readings would be zero since exposure is not continuous. A form of coding was added to eliminate the recording of no-field conditions. The number of consecutive zero readings was stored in a temporary register. When a field strength appears above the threshold, FFFF is placed in the memory along with the number of zero readings. Since FFFF hex will not appear as a legitimate value, it indicates that the next location contains the number of zero values. This is a form of run-length encoding.

When a memory-readout reset occurs, the contents of the temporary register are displayed immediately following the display of the pointer to the last memory location used. If more data is put in the memory than it can hold, the software causes the microprocessor to go into the powerdown mode until it can be reset externally. The program returns back to the beginning where it dumps the memory through the readout unit.

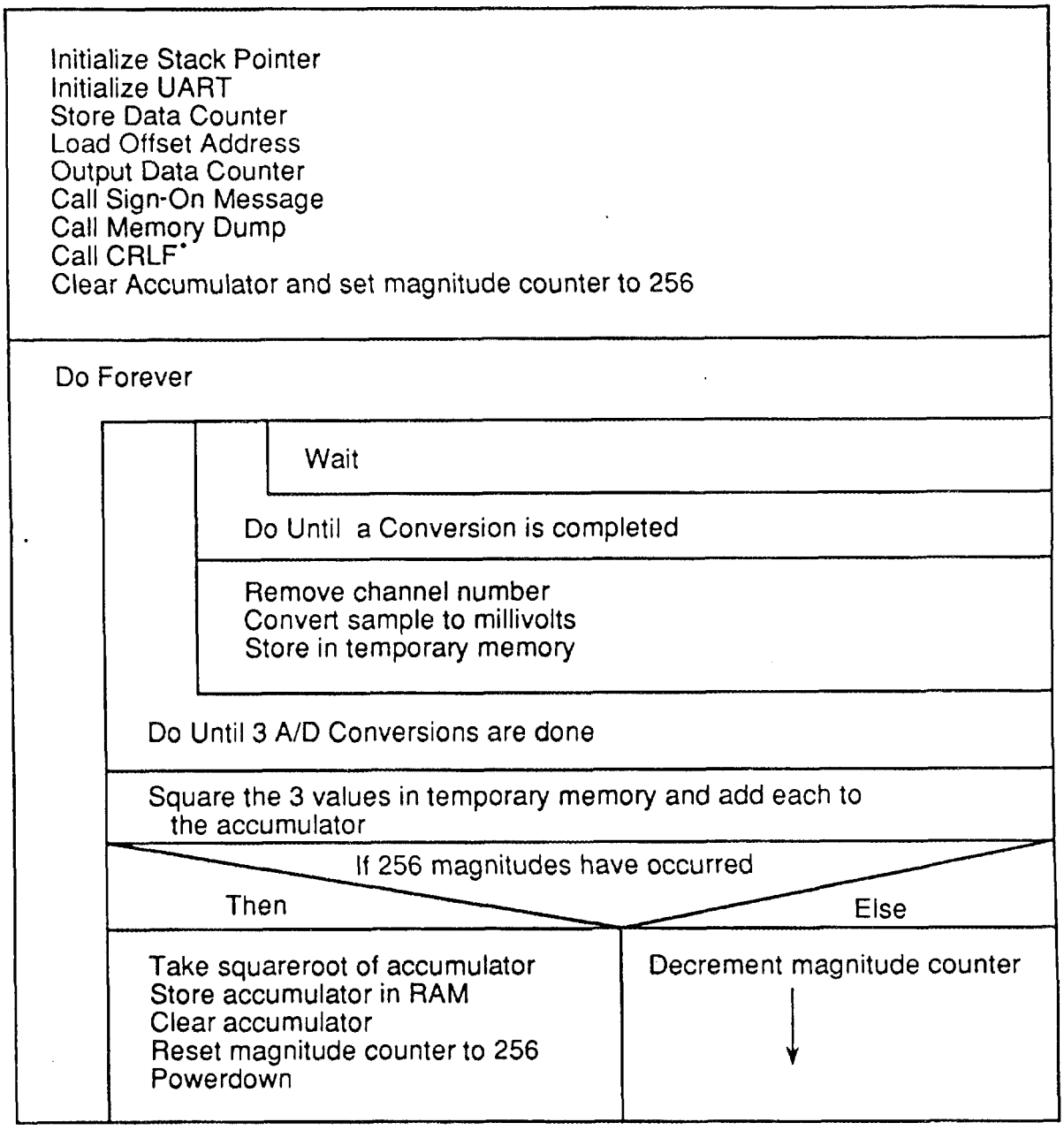

Fig. 4. Structure chart of program flow.

*Carriage return line feed.

8. PACKAGING

The proposed specifications for the rf dosimeter called for an instrument approximately the size of a deck of playing cards. The case of the prototype rf dosimeter is 3 7/8 in. high, 2 1/2 in. wide, and 1 1/4 in. thick. Thus, the rf dosimeter is approximately the size of a deck of playing cards and can be equipped easily for transport by shipboard personnel. Figure 5 shows the assembled rf dosimeter.

Earlier developmental versions of the rf dosimeter were larger than the size called for in the proposal specifications, so several options were explored to reduce the size of the instrument. The number of IC chips and discrete components was minimized, and the Intel 80C196KB microprocessor was used since it houses both a CPU and A/D converters. The number of latches was reduced to one, and memory devices were chosen based on their size and power consumption. Also, IC sockets were chosen that already had filter capacitors connected between the power-supply voltage and ground. The circuitry of the rf dosimeter was divided between two printed-circuit boards that were stacked to reduce the instrument length. This alteration did not add significantly to the thickness of the casing since accommodating the battery already forced the instrument to be at least 1 in. thick. The selected battery was a two-cell lithium battery connected in series to yield 6 V. Lithium was chosen because of its high energy density, its optimum energy per pound ratio, and its availability in a convenient size and voltage output for the rf dosimeter application.

Other packaging considerations included attaching the dipole antenna system in a manner that would be mechanically secure and reasonably compact. The final design included a cylindrical plastic cover for the dipole antenna system, a metal support for the cover, and three feedthrough capacitors. Figures 6 and 7 show the antenna-cover support and the antenna cover for the rf dosimeter, respectively. Excluded in an earlier design, the feedthrough capacitors were added to improve the shielding integrity of the case. The feedthrough capacitors were chosen based on their attenuation characteristics at frequencies above 1 GHz, their threaded mounting mechanism, and their overall size.

A 1/8-in.-thick aluminum case, with a top-mounted lid, was used to house the rf dosimeter. Along with the lithium battery, the two printed-circuit boards were stacked and mounted in the case on an insulator pad (shown in Fig. 8) to provide support against vibrations. Small openings were drilled in the instrument case to accommodate the connection of the antenna system, by way of feedthrough capacitors, to the internal circuitry. The threaded feedthrough capacitors were used to attach the cover support to the case. The antenna system then was glued to the case, and the leads were soldered to the capacitors. The last step was to attach the plastic cover to its support using small plastic screws.

As indicated earlier, feedthrough capacitors were not originally used; instead a hole large enough to accommodate the antenna leads was drilled in the case. However, when the instrument was tested in the 10-GHz frequency range, it failed at power-density levels over 200 mW/cm^2. Thus, feedthrough capacitors were used to reduce the susceptibility of the instrument at high frequencies. As an additional shielding measure, conductive aluminum tape was placed over the edge of the case to serve as a gasket for the lid interface.

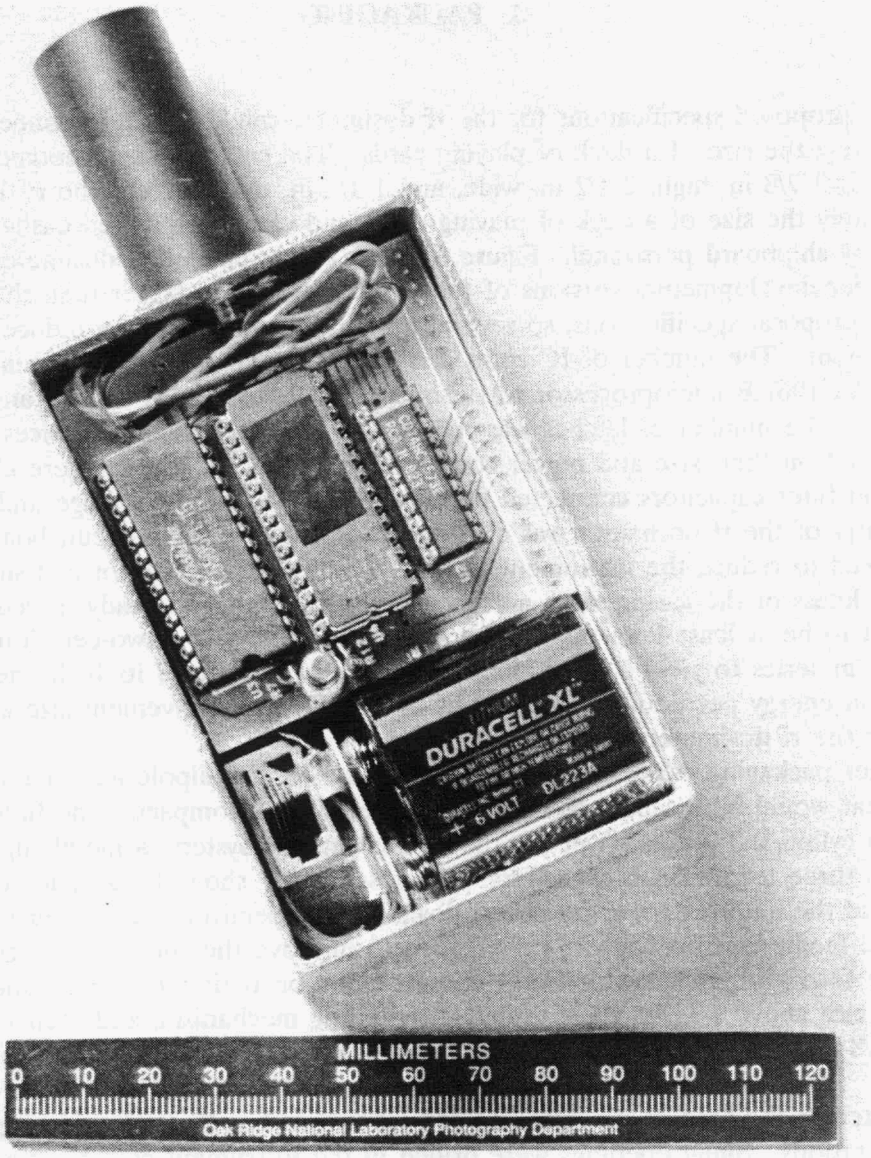

Fig. 5. Assembled rf dosimeter.

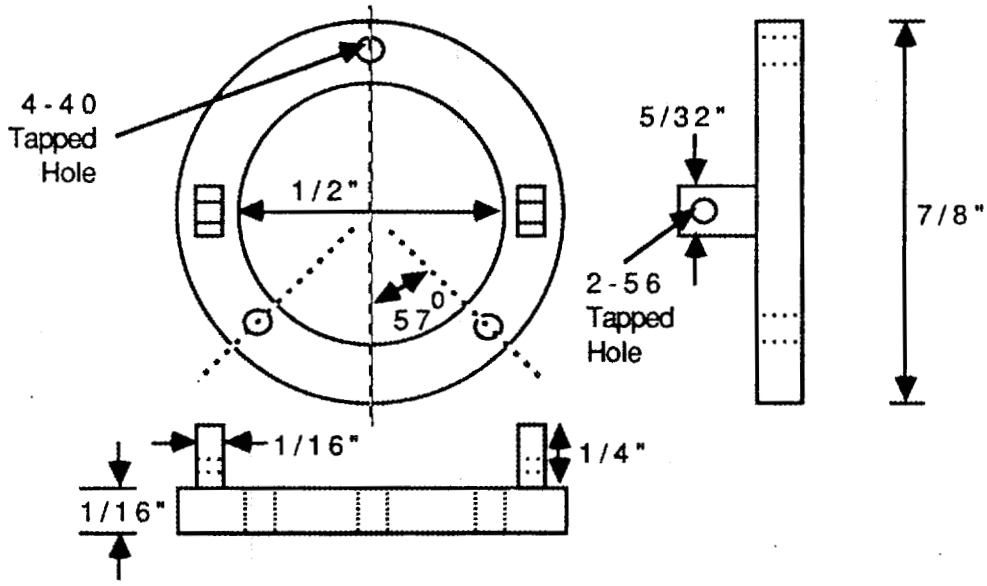

Fig. 6. Antenna-cover support for rf dosimeter.

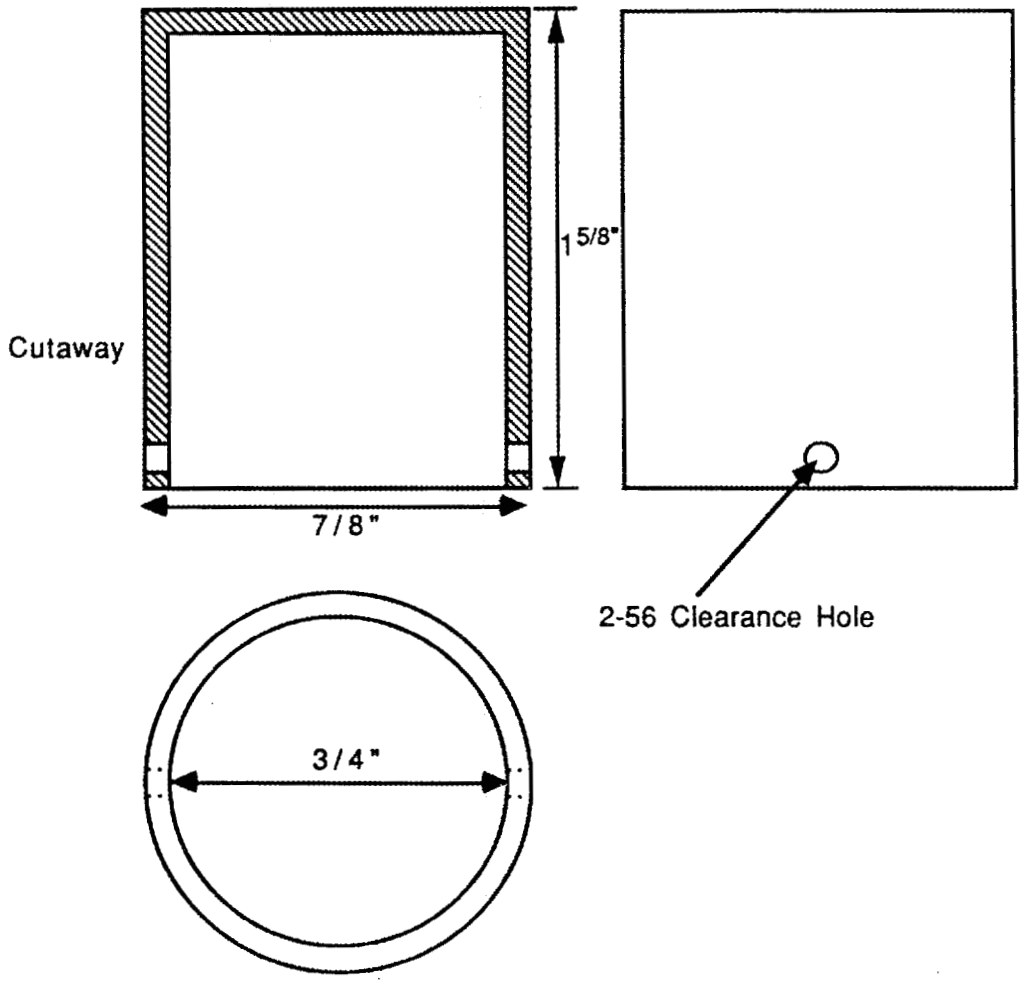

Fig. 7. Antenna cover for rf dosimeter.

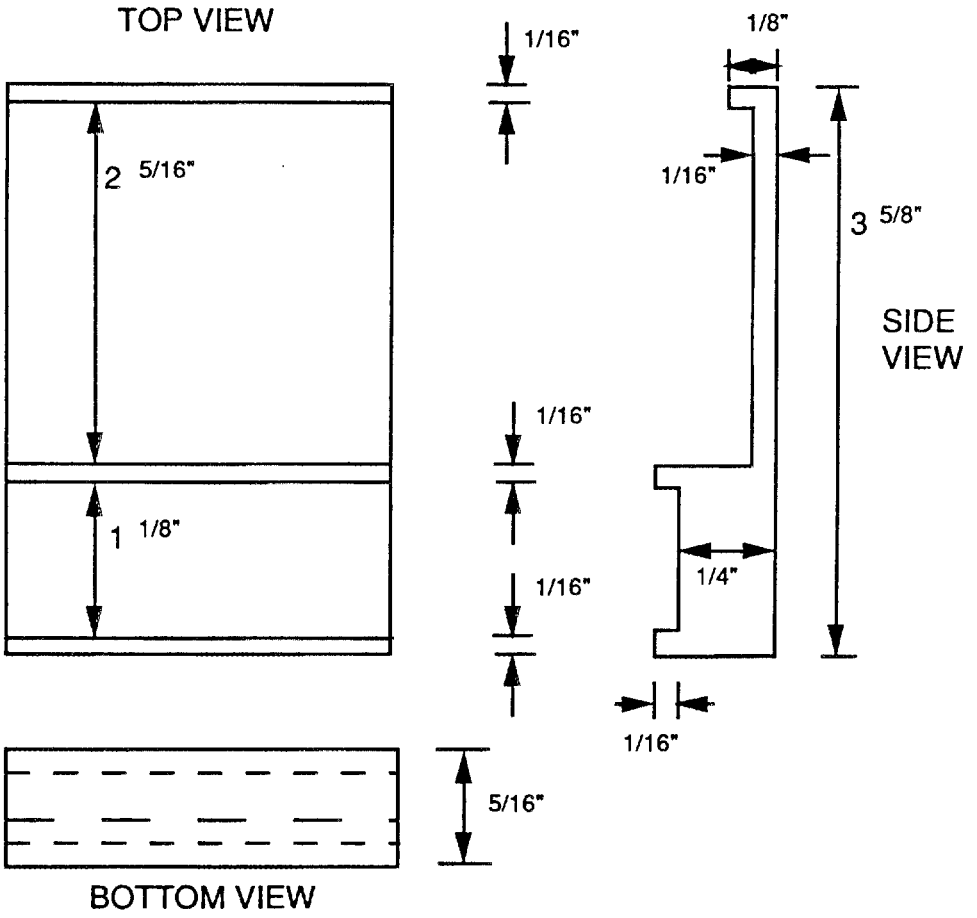

Fig. 8. Insulator pad for rf dosimeter.

9. READOUT INTERFACE UNIT

The schematic diagram for the readout interface unit is shown in Fig. 9. The readout unit is shown in Fig. 10 and incorporates an interface between the serial output of the microprocessor and the serial input to an IBM-compatible PC. Within the unit are the interface chips to convert transistor-transistor logic (TTL) signals to RS-232 format. The serial output from the microprocessor has logic levels between 0 and +5 V. This is converted to levels between +15 and −15 V by the 1489 integrated circuit. There is a provision to convert the RS-232 signals from the PC to the TTL levels of the microprocessor, but it was not necessary to implement this feature. At some point it could be practical to put a flash EPROM in place of the ultraviolet EPROM because EPROM can be programmed right in its socket. A line was included that runs from the reset pin to a switch on the readout unit. This allows the operator to reset the microprocessor, starting the process of dumping the memory of the rf dosimeter.

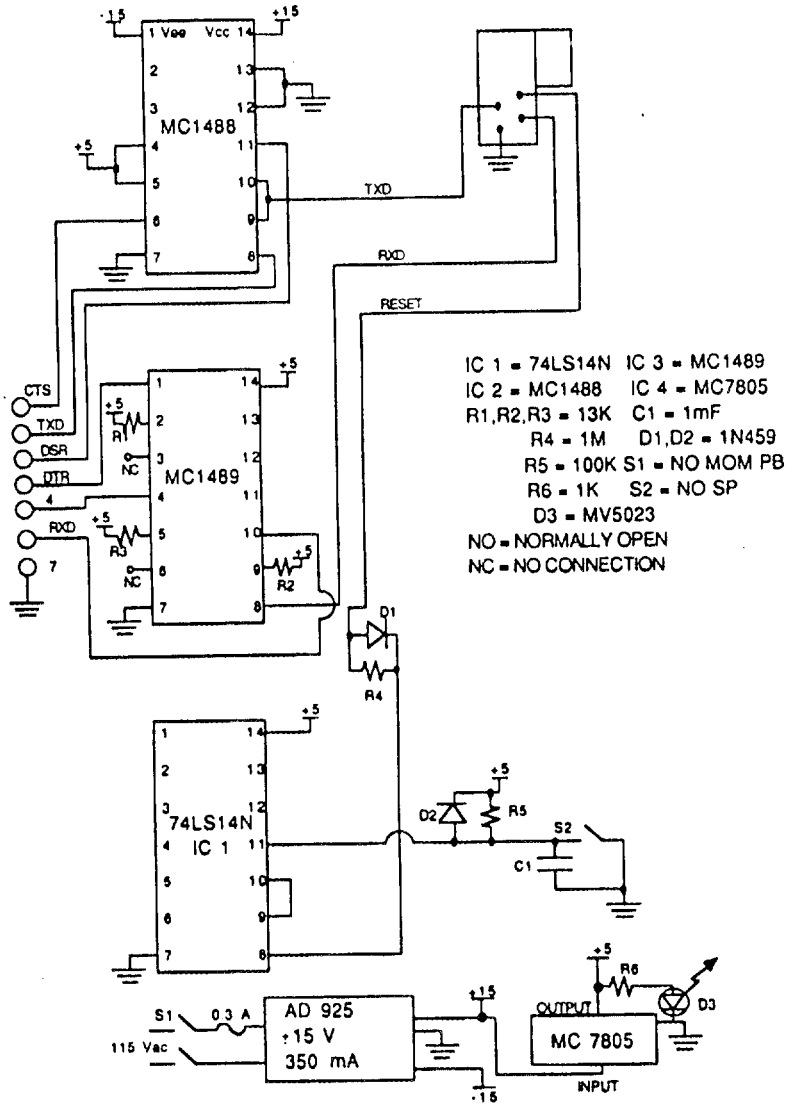

DES		MARTIN MARIETTA ENERGY SYSTEMS, INC. operated for the Department of Energy under U.S. Government contract DE-AC-05-840-R21400		
DRW				
CHK				
GRP		READOUT UNIT		
		RF PERSONAL MONITOR		12/13/89
DRAWING APPROVALS	DATE	I & C	Q 6295-2	REV 1

Fig. 9. Schematic diagram for readout unit.

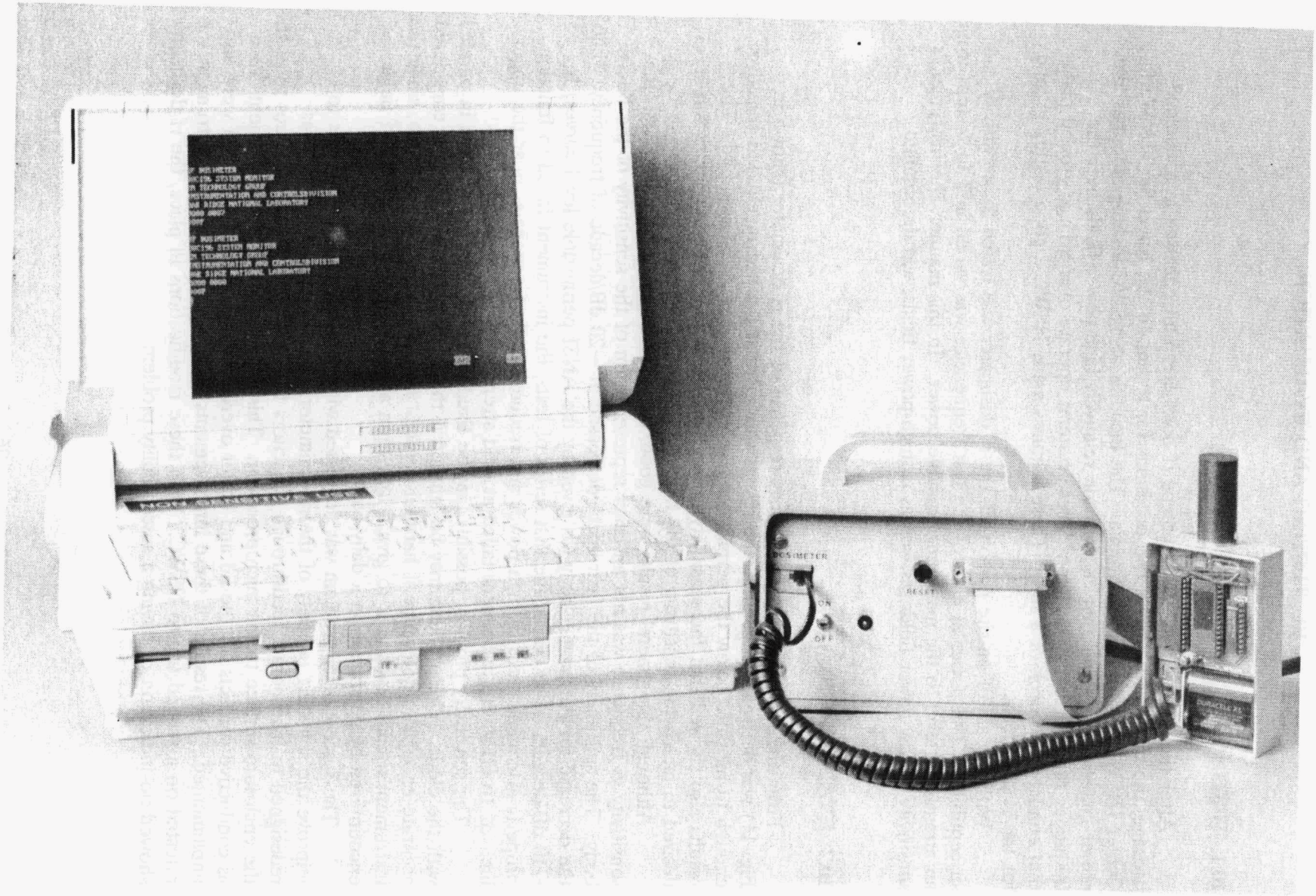

Fig. 10. Readout unit.

10. TESTING AND EVALUATION

10.1 TESTING

After the completion of a prototype rf dosimeter unit enclosed in a shielded package, the unit was taken on two occasions for testing to the Naval Surface Warfare Center (NSWC) in Dahlgren, Virginia. The facilities at NSWC include antennas and power generation systems that can provide relatively high-power fields over the frequency range of the instrument. These systems operate over a large ground plane that emulates the deck of a ship. These features made NSWC a good testing ground for the rf dosimeter.

With the aid of on-site personnel, the rf dosimeter was tested for sensitivity and susceptibility. The power at each of the test frequencies was varied in 3 to 5 steps from an attenuated level to the maximum available power. In this manner, the instrument's sensitivity to low-power fields, as well as to high-power fields, was determined.

10.2 EVALUATION

From the test results, the frequency response of the rf dosimeter (shown in Fig. 11) was derived. In general, the results showed that the instrument was sensitive enough to measure below the permissible levels given by the ANSI standard. The results also showed that the sensitivity decreased with increasing frequency as was desired to match the sensitivity of the human body.

Although the general results were good, there were some problems. First, the sensitivity vs frequency was not an exact representation of the sensitivity of the human body. The sensitivity of the instrument decreased at ~20 dB/decade of frequency, while the decrease for the human body (as given by the ANSI permissible level curves) is ~10 dB/decade. Also during the first series of tests, the instrument failed to function properly at combinations of high power and frequency. At frequencies near the upper limit of 10 GHz, the instrument failed at field strengths above 1000 V/m.

The sensitivity problem possibly may be fixed by altering the impedance in parallel with the diode. The problem may be ignored if the instrument's sensitivity is considered accurate enough to determine if harmful dosages are present in the work area, since the instrument's main function is to give a long-term approximate history of the rf fields encountered by personnel on a daily basis.

The susceptibility problem was addressed with the incorporation of fixes to improve the shielding integrity of the rf dosimeter. The enclosure housing was redesigned to incorporate feedthrough capacitors for passing the antenna values through the enclosure surface to the microprocessor. This and other minor improvements such as conductive contacts for the lid and better overlap of the case body and lid were also implemented. The results of these improvements were verified when the instrument was retested on a second trip to NSWC. With these modifications in place, the rf dosimeter showed no indication of having a susceptibility problem.

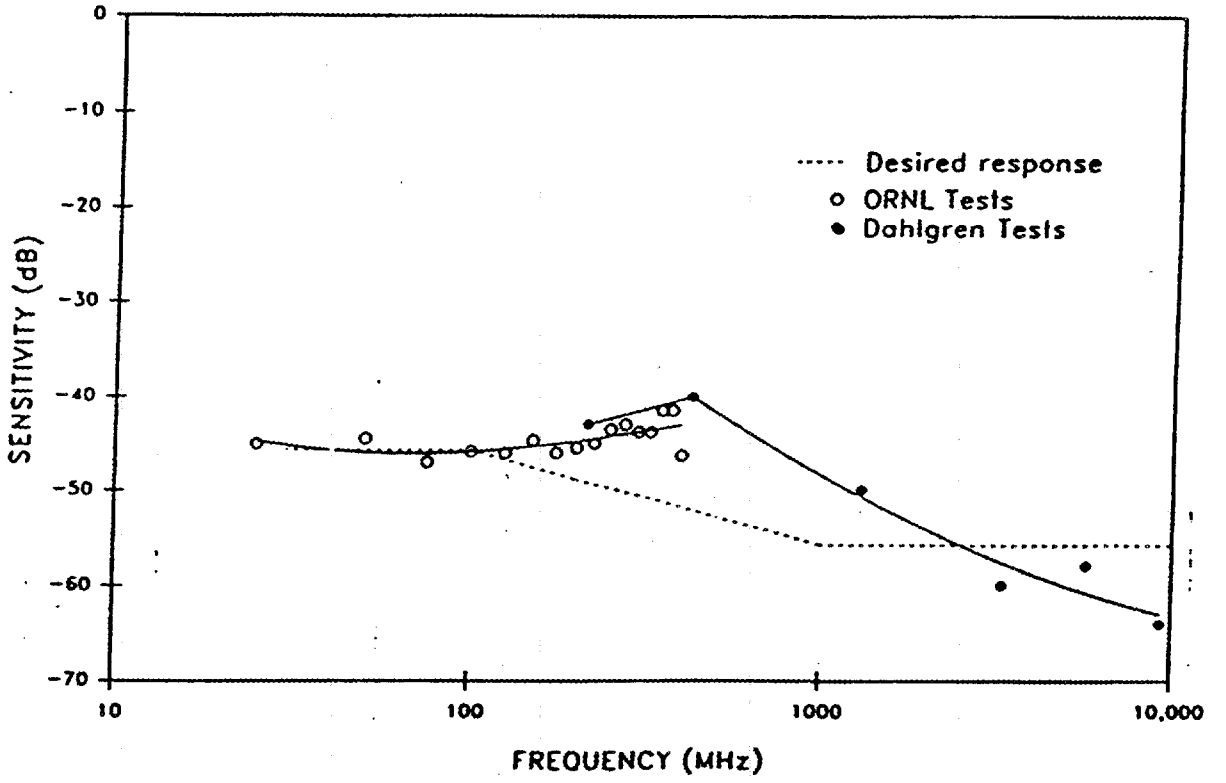

Fig. 11. Frequency response of rf dosimeter.

11. CONCLUSIONS

The primary goals of the project were achieved. An instrument was made that is the size of a deck of playing cards and has an "on" time of ~125 days with unselected microprocessors. When the minimum powerdown current of the microprocessors is specified at purchase, the life of a single battery will be over 1 year. The antenna can be fabricated fairly inexpensively and seems to meet the general specifications. Now that the software and hardware are developed, the rf dosimeter will make a good platform for future tests on the antenna characteristics. The 8-Kbyte static memory being used may not have enough capacity for some measurements. If the unit is assigned to an individual and only a history of that individual's exposure to nonionizing radiation is desired, the smaller memory should be adequate. Installing a larger memory is simple because the printed-wiring boards were made to accommodate the larger chip. Experience must be gathered in the intended environment to size the memory properly. The software was easy to develop because of the powerful instruction set of the 80C196 microprocessor. Maintenance of the software should be fairly easy.

Several features that were in the original project specifications were set aside as the project proceeded. It was thought originally that the instrument should have an audible alarm when a preset level of field strength was exceeded. This can be accomplished with minimum effort, but it was decided that the alarm might cause personnel to leave the area without performing their assigned functions, possibly jeopardizing a mission. Another goal was to develop a unit that would be powered by the electric field the instrument measures. Since the instrument has to be returned for readout, it was thought that it would be just as easy to replace the small battery at that time. Autoranging on the antenna inputs was not necessary because the 10-bit A/D converter covers the full dynamic range.

The instrument was designed to record the average field strength during a 2-min period. To conserve memory, however, this period should be as long as possible. Six minutes appears to be the internal-temperature time constant of the human body. Three samples in the 6-min period would be a compromise between adequate sampling and memory conservation. Experience should dictate the proper recording time. The first units have incorporated a recording time of less than 2 min so that the operational tests could be accelerated.

The readout of the memory has been very satisfactory. A program was written using Lotus 1-2-3 software to display a graphical time history of the readouts.* This can be done immediately after readout, giving the operator an instant view of exposure.

Three identical units have been built and tested. The test results showed that the instrument had adequate measurement sensitivity and could survive high-power fields. A group of units will be fabricated at low cost and placed in their intended environment to determine how well they define the rf field-strength environment.

*Lotus 1-2-3, Release 2.01, Lotus Development Corporation, 55 Cambridge Parkway, MA 02142.

ACKNOWLEDGMENTS

The authors wish to express their appreciation to the following personnel associated with the Instrumentation and Controls Division for providing their valuable assistance in the design and fabrication of the rf dosimeter.

Glenn Howell	Co-op Student, Tuskegee University
Nance Ericson	Research Instruments Section
Martin Bauer	Research Instruments Section
Reggie Miles	Plant & Equipment (P&E) Machine Shop
David Denning	Electronic Fabrication Shop
Keith Drescher	Electronic Fabrication Shop
Peggy Johnson	Electronic Fabrication Shop
Ron Miller	Electronic Fabrication Shop
Mike Cutshaw	Product Development & Drafting
Sandra Inman	Product Development & Drafting
Teri Subich	Product Development & Drafting

REFERENCES

1. I. K. Kaplan et al., "Absence of Heart-Rate Effects in Rabbits During Low-Level Microwave Irradiation," *IEEE Trans. Microwave Theory Tech.* **MTT-19**(2), 168–73 (February 1971).

2. E. A. Drogichina et al., "Autonomic and Cardiovascular Disorders During Chronic Exposure to Super-High Frequency Electromagnetic Fields," *Gigiyena Truda I Professional Nyye Zabolevaniya* 7, 13–17 (1966).

3. N. V. Tyagin, "Dogs Exposed to 5-10 mW/cm^2 Microwave Power Densities Showed Variations in Heart Rate," *Trans. Mil. Med. Acad.* **73**, 102 (1957).

4. A. S. Presman and N. A. Levitina, "Nonthermal Action of Microwaves on Cardiac Rhythm—Part I: A Study of the Action of Continuous Microwaves," *Byull. Ekspl. Biol. Med.* **53**(1), 41–44 (January 1962).

5. A. S. Presman, "Experimental Installation for the Dosed Irradiation of Rabbits With 10-cm Microwaves," *Novosti Medisinskoi Tekhniki* **4**, 51–55 (1960).

6. M. Grandolfo, S. M. Michaelson, and A. Rindi, *Biological Effects and Dosimetry of Non-Ionizing Radiation*, Plenum Press, New York, 1981.

7. S. M. Michaelson, "Thermal Effects of Single and Repeated Exposures to Microwaves," *Proceedings of the 1973 Int'l. Symposium on Biologic Effects and Health Hazards of Microwave Radiation*, Warsaw, Oct. 15–18, 1973.

8. M. Kanda and L. Driver, "An Isotropic Electric-Field Probe with Tapered Resistive Dipoles for Broad-Band Use, 100 kHz to 18 GHz," *IEEE Trans. Microwave Theory Tech.* **MTT-35**(2) (February 1987).

9. E. B. Larsen and F. X. Ries, "Design and Calibration of the NBS Isotropic Electric-Field Monitor [EFM-5], 0.2 to 1000 MHz," *U.S. Natl. Bur. Stand.* Tech. Note 1033 (March 1981).

10. T. Tang and M. W. Gunn, "The Terminal Voltage of a Receiving Dipole Antenna," *IEEE Trans. Antennas Propag.* **AP-32**(3) (March 1984).

11. T. T. Wu and R. W. P. King, "The Cylindrical Antenna With Nonreflecting Resistive Loading," *IEEE Trans. Antennas Propag.* **AP-13**(3), 369–73 (May 1965).

12. B. S. Hoffheins, M. R. Moore, and M. L. Bauer, "An Omnidirectional Antenna for a Personal RF Dosimeter," *Proceedings of the 1989 Int'l. Symposium for Hybrid Microelectronics*, The International Society for Hybrid Microelectronics, Baltimore, October 1989.

13. M. L. Topfer, *Thick-Film Microelectronics, Fabrication, Design and Applications*, Van Nostrand Reinhold Co., New York, 1971.

APPENDIX A

SOURCE CODE FOR PERSONAL RF DOSIMETER

SOURCE CODE FOR PERSONAL RF DOSIMETER

```
;**********************
;*
;*   D4T .ASM
;*    Sept. 29, 1989 21:00
;**********************
;
;**********************
;*
;*
;*
            RSEG
            ORG     0000H
ZERO        DSW     1           ; R/W
ADRELO      DSB     1           ; R
ADCOMM      EQU     ADRELO      ;   W
ADREHI      DSB     1           ; R
HSITIM      DSW     1           ; R
HSISTA      DSB     1           ; R
SBUF        DSB     1           ; R/W
INTMAS      DSB     1           ; R/W
INTPEN      DSB     1           ; R/W
TIME1L      DSB     1           ; R
TIME1H      DSB     1           ; R
IOC2        EQU     TIME1H      ;   W
TIMER2      DSW     1           ; R
PORT0       DSB     1           ; R
BAUDRT      EQU     PORT0       ;   W
PORT1       DSB     1           ; R/W
PORT2       DSB     1           ; R/W
SPSTAT      DSB     1           ; R
SPCON       EQU     SPSTAT      ;   W
STATUS      DSW     1
            ORG     0015H
IOS0        DSB     1           ; R
IOS1        DSB     1           ; R
IOS2        DSB     1           ; R
IOC0        EQU     IOS0        ;   W
IOC1        EQU     IOS1        ;   W
PWMCON      EQU     IOS2        ;   W
SP          DSW     1           ; R/W   STACK PNTR
;
            ORG     0034H
AX          DSW     1
BX          DSW     1
CX          DSW     1
```

```
DX          DSW     1
EX          DSW     1
FX          DSW     1
GX          DSW     1
GAX         DSW     1
HX          DSW     2
AL          EQU     AX
AH          EQU     AX+1
BL          EQU     BX
CL          EQU     CX
DL          EQU     DX
EL          EQU     EX
EH          EQU     EX+1
FL          EQU     FX
FH          EQU     FX+1
GL          EQU     GX
            ORG     0050H
RESUL1      DSW     1
RESUL2      DSW     1
RESUL3      DSW     1
RESUL4      DSW     1
COUNTR      DSW     1
MSD1        DSB     1
MSD2        DSB     1
RESET1      DSB     1
ON          DSB     1
CNTR        DSW     1
FLAG        DSB     1
OFF         DSB     1
MARK        DSW     1           ORG             0070H
A0          DSW     1
A1          DSW     1
D0          DSW     1
D1          DSW     1
D2          DSW     1
TEMP0       DSW     1
FRSPRM      DSW     1
COUNT       DSW     1
LSTCHR      DSB     1
NULLS       DSB     1
CHKSUM      DSB     1
HAVCHR      DSB     1
RCVCHR      DSB     1
ILEN        DSB     1           ; INTL DNLOAD REC. LEN
GOADDR      DSW     1           ; ADDR WHERE EXEC. BEGINS
PCREG       DSW     1           ; SAVED PC
PSWREG      DSW     1           ; USERS PSW
SPREG       DSW     1           ; SAVED USER REG
```

```
;*
;*************************
;*
;*  SYSTEM EQUS
;*
SSPSTR      EQU         0C000H          ; SYSTEM STK PNTR START
USPSTR      EQU         0BF00H
;*
;*************************
;*
;*  SYSTEM VECTORS
;*
;*************************
;*
            CSEG                        ; CODE SEGMENT
            ORG         0100H
;*
;*************************
;*
;*  DC'S MUST GO BEFORE OPCODES
;*
SOMSG       DCB         0DH,0AH
            DCB         'RF DOSIMETER',0DH,0AH
            DCB         '80C196 SYSTEM MONITOR',0DH,0AH
            DCB         'EM TECHNOLOGY GROUP',0DH,0AH
            DCB         'INSTRUMENTATION AND CONTROLS'
            DCB         'DIVISION',0DH,0AH
            DCB         'OAK RIDGE NATIONAL LABORATORY'
            DCB         0DH,0AH,00H
;*
;*
            CSEG
            ORG         2018H
CCI         DCW         0F9H            ; CHIP CONFIG. REG.
;*
;*************************
;*
;*  PROGRAM STARTS HERE
;*
;*************************
;
            CSEG
            ORG         2080H
INIT        LD          SP,#0F0H        ; SET STACK PNTR
            DI                          ; DISABLE INT
            LDB         IOC2,#04H       ; SPEED UP A/D
            LD          MARK,#0FFFFH    ; IDENTIFIER
            CLRB        FLAG            ; FLAG FOR ZEROS
```

```
        SCALL   UART
        SCALL   SIGNON
        ST      CX,COUNTR          ; STORE COUNTER
        LD      CX,#8000H          ; OFFSET ADDRESS
        LD      A0,COUNTR          ; OUTPUT COUNTR
        SCALL   WRTWRD
        SCALL   SNDBLK
        LD      A0,CNTR            ; LAST RUN LENGTH
        SCALL   WRTWRD
        SCALL   CRLF
        CLR     CNTR               ; RESET RUN LEN REG
        CLR     EX                 ; 4 RECORD COUNTER
        SCALL   DUMPMM             ; DUMP THE MEMORY
        SCALL   CRLF
        LD      CX,#8000H          ; RESET POINTER
        LDB     RESET1,#10H        ; FOR PORT 1 OUTPUT
        CLR     HX
        CLR     HX+2
        LDB     FL,#0FFH           ; SET # OF 3-ADDS
ADSTRT  CLR     BX
;
        INCB    BL                 ; START AT CHAN. 1
        LD      DX,#RESUL1         ; START DATA TABLE
NEXT    ADDB    ADCOMM,BL,#1000B   ; STRT CONVERSION
        LD      MSD1,#00H          ; ON BL CONTENTS
;
DOTIL5  NOP                        ; WAIT FOR CONV
IF5     JBC     ADRELO,#3H,THEN5   ; WAIT WHILE BUSY
ELSE5   INCB    MSD1               ; BUMP CNTR
        SJMP    FI5
THEN5   LDB     MSD1,#201          ; LEAVE LOOP
FI5     CMP     MSD1,#200          ; TIMEOUT
ODTIL5  JLT     DOTIL5
;
        LDB     AL,ADRELO          ; LOAD LO ORDER
        LDB     AH,ADREHI          ; LOAD HI ORDER
        SHR     AX,#6              ; REMOVE CHAN NO.
        ST      AX,(DX)+           ; OFFSET TO ENTRY
        INCB    BL                 ; NEXT SAMPLE
        CMPB    BL,#04H
        JNE     NEXT
;
        CLR     BX
        SCALL   RMS                ; RMS VALUE
        NOP                        ; PUT F602 HERE
        NOP                        ;  TO POWER DOWN
NOP
        NOP
```

```
            LJMP        ADSTRT
;
;
SDELAY      LD          FX,#0008H
DLLP00      LD          EX,#1000H
DLLP01      DEC         EX
            JNE         DLLP01
            DEC         FX
            JNE         DLLP00
            RET
;
LDELAY      LDB         GL,#01FH
LOOP        SCALL       SDELAY
            DJNZ        GL,LOOP
            RET
;
;**************************
;
RMS         LDB         EL,#3           ; DATA COUNTER
            LD          DX,#RESUL1      ; DATA POINTER
SQUARE      LD          AX,(DX)         ; PUT DATA INTO AX
            MULU        AX,(DX)+        ; SQUARE AX
            ADD         HX,AX           ; MOVE TO REG
            ADDC        HX+2,AX+2
            DJNZ        EL,SQUARE       ; FINISH?
;
IF0         DJNZ        FL,FI0          ; ADD 256 SAMPLES
ELSE0       NOP
;
            CLR         EL              ; EL IS COUNTER
            ADD         HX+2,#0         ; TEST HI WORD
IF1         JNE         THEN1           ; TEST HI WORD
ELSE1       ADD         HX,#0           ; TEST LOW WORD
IF6         JNE         THEN6
ELSE6       INC         HX
THEN6       NOP
DOTIL1      INC         EL              ; MANTISSA
            SHL         HX,#1           ; SHFT MSB TO CARRY
ODTIL1      JNC         DOTIL1
            INC         HX+2            ; MOVE CARRY TO HI
IF2         JBC         EL,#00,FI2      ; TEST FOR EVEN
            SHLL        HX,#1
            INC         EL
FI2         NOP
;
            LD          AX,HX           ; COPY DIVIDEND
            LD          AX+2,HX+2
            SHRL        AX,#8           ; DIVISOR IN AX
```

```
            LD          GX,AX               ; PUT ESTIMATE
            SJMP        FI1
THEN1       NOP                             ; HX+2 IS NOT ZERO
DOTIL2      INC         EL                  ; MANTISSA
            SHLL        HX,#1               ; SHFT MSB TO C
ODTIL2      JBC         HX+3,#07,DOTIL2     ; JUMP ON BIT 15
            DEC         EL                  ; MOVE ONE PLACE
            SHRL        HX,#1               ;  TO RIGHT
IF3         JBC         EL,#00,THEN3        ; JUMP IF EVEN
ELSE3       SHRL        HX,#1               ;  OR GET MSB
            DEC         EL                  ; MOVE CARRY
            SJMP        FI3
THEN3       NOP                             ; SATISFY EVEN
FI3         NOP
;
            LD          GX,HX+2             ; PUT ESTIMATE
            SHL         GX,#1               ; ENLARGE EST
FI1         NOP
            SHRB        EL,#1               ; HALF EXPONENT
;
            LD          AX,HX               ; RECOPY DIVIDEND
            LD          AX+2,HX+2
            SCALL       SQRT                ; DO SQUAREROOT
;
            SHR         GX,#4               ; / BY 16 (256 SAMP)
            MULU        GX,#5               ; CONVERT TO MV
            SCALL       LOWVAL              ; NO WRITE IF LOW
;
;
            CMP         CX,#9FFFH           ; TEST FOR OVRFLO
IF7         JNH         THEN7               ;
LOCK        NOP                             ; POWERDOWN INSTR
            NOP                             ;  GOES HERE (F602)
            NOP                             ;  (INFINITE LOOP)
            NOP
            SJMP        LOCK
THEN7       NOP
;
            CLR         HX
            CLR         HX+2
            LDB         FL,#0FFH            ; RESET COUNT
FI0         RET
;*
;*************************
;*
;*  SQUARE ROOT
;*
SQRT        LDB         FL,#5               ; LOAD COUNTER
```

```
DOTIL3      DIVU      AX,GX              ; AX IS QUOTIENT
            CLRB      FH
            ADD       GX,AX
IF4         JNC       THEN4
            LDB       FH,#80H
THEN4       NOP
            SHR       GX,#1              ; DIV EST BY 2
            ADDB      GX+1,FH            ; RESTORE BIT 15
            LD        AX,HX              ; RESTORE 32-BIT
            LD        AX+2,HX+2          ;  DIVIDEND
ODTIL3      DJNZ      FX,DOTIL3          ; FINISH?
            SHR       GX,EL              ; INSERT
            RET                          ;  DECIMAL POINT
;***************************
;*
;*   TEST FOR LOW VALUES
;*
LOWVAL      CMP       GX,#10H            ; TEST FOR LOW
IF8         JC        THEN8              ;  VALUES
            INC       CNTR               ; HOLDS NUM OF LOWS
            LDB       FLAG,#1            ; STORE FLAG
            SJMP      FI8
THEN8       CMPB      FLAG,#0            ; CHECK FLAG
IF10        JE        THEN10
            ST        MARK,(CX)+         ; PUT MARKER IN
            ST        CNTR,(CX)+         ; PUT NUM OF 0'S IN
            LDB       FLAG,#0            ; CLEAR FLAG
            SJMP      FI10
THEN10      NOP
FI10        ST        GX,(CX)+           ; PUT IN OTHER CHIP
FI8         RET
;*
;***************************
;*
;*  INIT UART
;*
UART        LDB       SPCON,#0DH         ; EVEN PARITY
            LDB       IOC1,#00100000B    ; SET P2.0 TO TXD
            LDB       BAUDRT,#0B9H       ; LOW BAUD BYTE
            LDB       BAUDRT,#80H        ; HI BAUD BYTE
            LDB       TEMP0,#00100000B   ; SET TI-TEMP
            LDB       INTMAS,#01000000B  ; ENABLE SER INT
            RET
;*
;***************************
;*
;*  SEND MONITOR PROMPT
;*
```

```
SENDPR      SCALL       CRLF
            LDB         D0,#2DH             ; PROMPT CHAR IS "-"
            SCALL       SNDCHR
            RET
;*
;**************************
;*
;*  WRITE ASCII HEX OF D0
;*  AND THEN A BLANK
;*
WRTBYT      PUSH        D0                  ; SAVE IT
            SHRB        D0,#4               ; GET MSN
            SCALL       WRTASC              ; MASK, MAKE ASCII, AND
                                              WRITE
            POP         D0                  ; RESTORE BYTE TO WRITE
            SCALL       WRTASC
            RET
;* .
;**************************
;*
;*  MASK TO LSN, MAKE ASCII,
;*  AND WRITE IT
;*
WRTASC      ANDB        D0,#0FH
            CMPB        D0,#0AH             ; CHECK A TO F
            JNC         LSTH9
;*
            ADDB        D0,#07
;*
LSTH9       ADDB        D0,#30H
            SCALL       SNDCHR
            RET
;*
;**************************
;*
;*  SEND A BLANK
;*
SNDBLK      LDB         D0,#20H
            SCALL       SNDCHR
            RET
;*
;**************************
;*
;*  DUMP MEMORY
;*
DUMPMM      LD          A0,(CX)             ; MOVE WORD TO A0
            LD          BX,#0FH             ; PUT 0FH IN MEMORY
            ST          BX,(CX)+
```

```
            SCALL     WRTWRD          ; WRITE A MEM WORD
            AND       DX,EX,#03       ; MASK 2 DIGITS OF EX
            CMP       DX,#03          ; FIND 4TH RECORD
IF11        JE        THEN11
ELSE11      SCALL     SNDBLK          ; PUT IN A SPACE
            SJMP      FI11
THEN11      LDB       D0,#2DH         ; PUT IN A HYPHEN
            SCALL     SNDCHR
            SJMP      FI11
FI11        INC       EX
            SUB       COUNTR,#2       ; RENMOVE LAST POINT
            CMP       COUNTR,CX       ; CARRY RESULTS IF +
            JC        DUMPMM          ;
            RET
;*
;*************************
;*
;*  WRITE WORD IN A0
;*
WRTWRD      LDB       D0,A0+1
            SCALL     WRTBYT
            LDB       D0,A0
            SCALL     WRTBYT
            RET
;*
;*
;*************************
;*
;*  WRITE CR AND LF
;*
CRLF        LDB       D0,#0DH
            SCALL     SNDCHR
            LDB       D0,#0AH
            SCALL     SNDCHR
            SCALL     SNDNUL
            RET
;*
;*************************
;*
;*  SEND NULLS ON CR/LF
;*
SNDNUL      PUSH      D1              ; SAVE D1
            LDB       D1,NULLS
            CLRB      D0              ; CONTAINS THE NULL
;
SNLP1       SCALL     SNDCHR          ; SEND THE NULL
            DJNZ      D1,SNLP1
;
```

```
            POP         D1                  ; RESTORE R1
            RET
;*
;*************************
;*
;*  WRITE THE SIGN-ON MESSAGE
;*
SIGNON      LD          A0,#SOMSG
            SCALL       WRTMSG
            RET
;*
;*************************
;*
;*  WRITE A ME4SSAGE INDICATED
;*  BY A0 UNTIL A 0 IS DETECTED
;*
WRTMSG      PUSH        D0                  ; KEEP INTACT
;
WMLP1       LDB         D0,(A0)+            ; GET CHAR TO WRITE
            CMPB        D0,#00H             ; IS IT 0?
            JE          WMQUIT              ; IF SO, ALL DONE
;
            SCALL       SNDCHR
;*
;*  IF LINE FEED, SEND NULLS
;*
WMSK1       SJMP        WMLP1
;
            CMPB        D0,#0AH
            JNE         WMSK1
            SCALL       SNDNUL
;*
WMQUIT      POP         D0                  ; RESTORE IT
            RET
;*
;*
;*************************
;*
;*  SEND A CHAR TO UART
SNDCHR      JBC         SPSTAT,#3H,SNDCHR; WAIT FOR BUFFER
            STB         D0,SBUF             ; SEND CHAR
            RET
;*
;*************************
;*
;*  DELAY AFTER A RESET
;*  FOR 500 MSEC
;*
```

```
DELAY   LDB     D0,#250
DLLP0   LDB     D1,#36+20       ;ADD 20 FOR SLACK
DLLP1   NOP
        DJNZ    D1,DLLP1
        NOP
        DJNZ    D0,DLLP0
        RET
        END
```

APPENDIX B

CONSTRUCTION OF DIPOLE ANTENNAS

CONSTRUCTION OF DIPOLE ANTENNAS (AFTER THE BAKING OF THE DIPOLE SUBSTRATE)

Glenn C. Howell*

Choosing the dipole substrates

The dipole antenna circuit is screen printed onto the perforated ceramic substrate, with eight circuits residing on each plate. When choosing three dipole antennas for an orthogonal sensor, the objective is to get three antennas with similar resistance values. The dipole substrates do not have to be taken from the same plate, but it is preferred.

There are two resistance values for each dipole substrate, a high value and a low value. These values represent the resistances of the two high-resistance leads. The values differ because one lead crosses over one extra time for an even number of loops, making it longer than the other lead. There are eight pairs of leads, labeled A through H, for each substrate plate. The desired range for the high value is from 295 to 310 kΩ. The desired range for the low value is from 260 to 270 kΩ. The selection of these values is based on the average and median values of both groups of high-resistance leads.

Separating the dipole substrates

On the end of each substrate plate is a strip with serial numbers on it. To distinguish between dipole substrates A through H, hold the substrate plate with the serial number strip on the left side. The top row, starting on the left, is A through D. The bottom row, starting on the left, is E through H. With your fingers, carefully break apart the dipole substrates as desired.

Checking the resistances of the high-resistance leads

Measure the resistance between each dipole antenna and its corresponding metal pad. The corresponding pad of a dipole substrate is on the opposite end and opposite side of the dipole substrate (e.g., if one lead of the ohmmeter is on the left metal pad, put the other lead on the right dipole's diode pad).

*Tuskegee University, Tuskegee, Alabama.

Attaching the plastic shimstock to the dipole substrate

1. Cut a 27/64- by 1/4-in. piece of plastic shimstock.

2. Obtain a 1/4- by 7/16-in. piece of ceramic substrate.

3. Place the shimstock at the metal-pad end of the dipole substrate. The shimstock and the ceramic substrate should be the same width.

4. Turn the dipole substrate face down, being careful not to scar the printed areas.

5. Mix an adequate amount of clear epoxy (Epoxi-Patch 808).

6. Glue the dipole substrate and the shimstock together by applying a small amount of epoxy on each end of the ceramic substrate. Using the small piece of ceramic substrate as a cross member, join the shimstock and the dipole substrate together as shown in Fig. B.1.

Mounting the capacitor

1. After allowing the epoxy to harden (~30 min), use a fine file to roughen the top surface of the plastic shimstock.

2. Apply a small amount of epoxy to the top surface of the plastic shimstock. Avoid getting the epoxy on the metal pads of the dipole substrate. If this occurs, wipe it off immediately with a paper towel.

3. Mount the capacitor on the shimstock so that the tinned ends of the capacitor are facing outward and allow the epoxy to harden. Two types of capacitors were used; Johnson Dielectrics, 0.47 μF capacitor, Part No. 500547W474MB4 and USCC/Centralab, .047 μF cermolithic chip capacitor, Part No. W050FH473MPS.

Attaching the nickel ribbon leads to the capacitor

1. Line a small vise with paper and place the antenna assembly within.

2. Cut two small segments (1/2 in. long each) of 0.001- by 0.020-in. annealed nickel ribbon (Stock No. 25X54284, Sigmund Cohn Corp.).

3. Solder one end of each piece of nickel ribbon on each side of the capacitor, making sure that the free ends are toward the metal pads and that the ends will reach the pads.

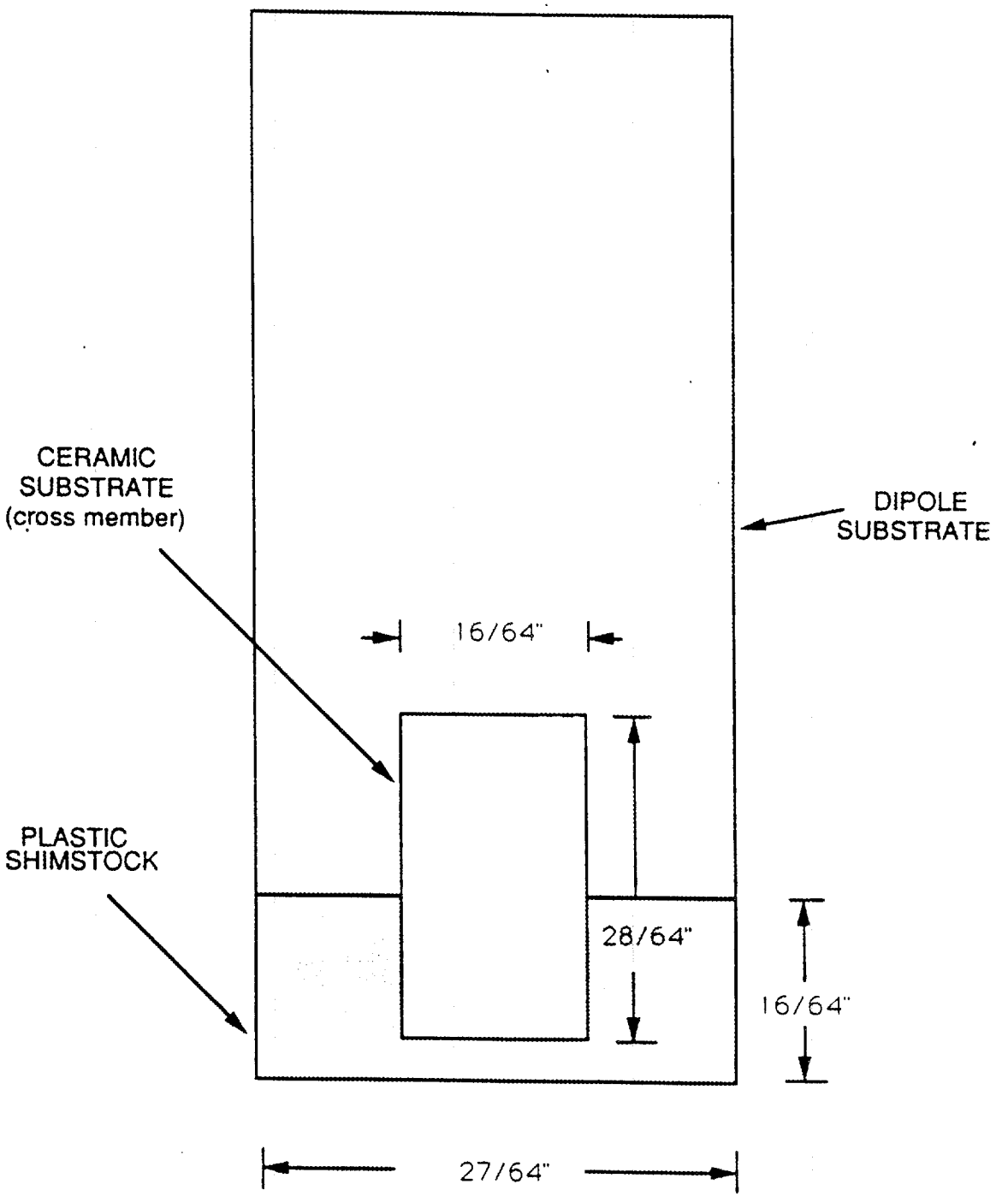

Fig. B.1. Bottom view of antenna assembly.

Attaching lead wires to capacitor

1. Obtain two 8-in. pieces of 30-gauge, tinned copper wire. One lead should be blue, and the other should be red.

2. Position the antenna so that the capacitor is at the bottom and the dipoles are at the top.

3. Solder the red lead onto the right side of the capacitor and the blue lead onto the left side. Attach the leads so that the free ends of the wires point away from the assembly.

Attaching the nickel ribbon to the metal pads

1. Obtain a tube of Tra-con "Bipax Tra-duct" BA-2902 conductive epoxy.

2. Place the assembly under a microscope (×1.2 magnification) and center the metal pads in the field of view.

3. Using a sharp, pointed instrument, position the nickel ribbons as close as possible to their respective pads and cut off the excess ribbon.

4. Apply the conductive epoxy to each ribbon-pad connection.

5. Make sure that the epoxy does not accidentally bridge the two pads together. If this occurs, the conductive epoxy can be removed with isopropyl alcohol and a small brush. Remove the excess alcohol with a cotton swab, wait until dry, and then reapply the epoxy.

Mounting the diode between the dipoles

1. Place the assembly under the microscope (×1.2 magnification).

2. Using the sharp, pointed instrument, apply a small amount of conductive epoxy to the contact pad of each dipole antenna.

3. Using a vacuum pickup device, pick up the diode (HP 5082-2837) and place it between the dipoles with the arrow end of the diode pointing upward as shown in Fig. B.2.

Curing the conductive epoxy

1. Place the antenna in a box furnace (oven), bake it for 15 min at 150°C, and then remove it.

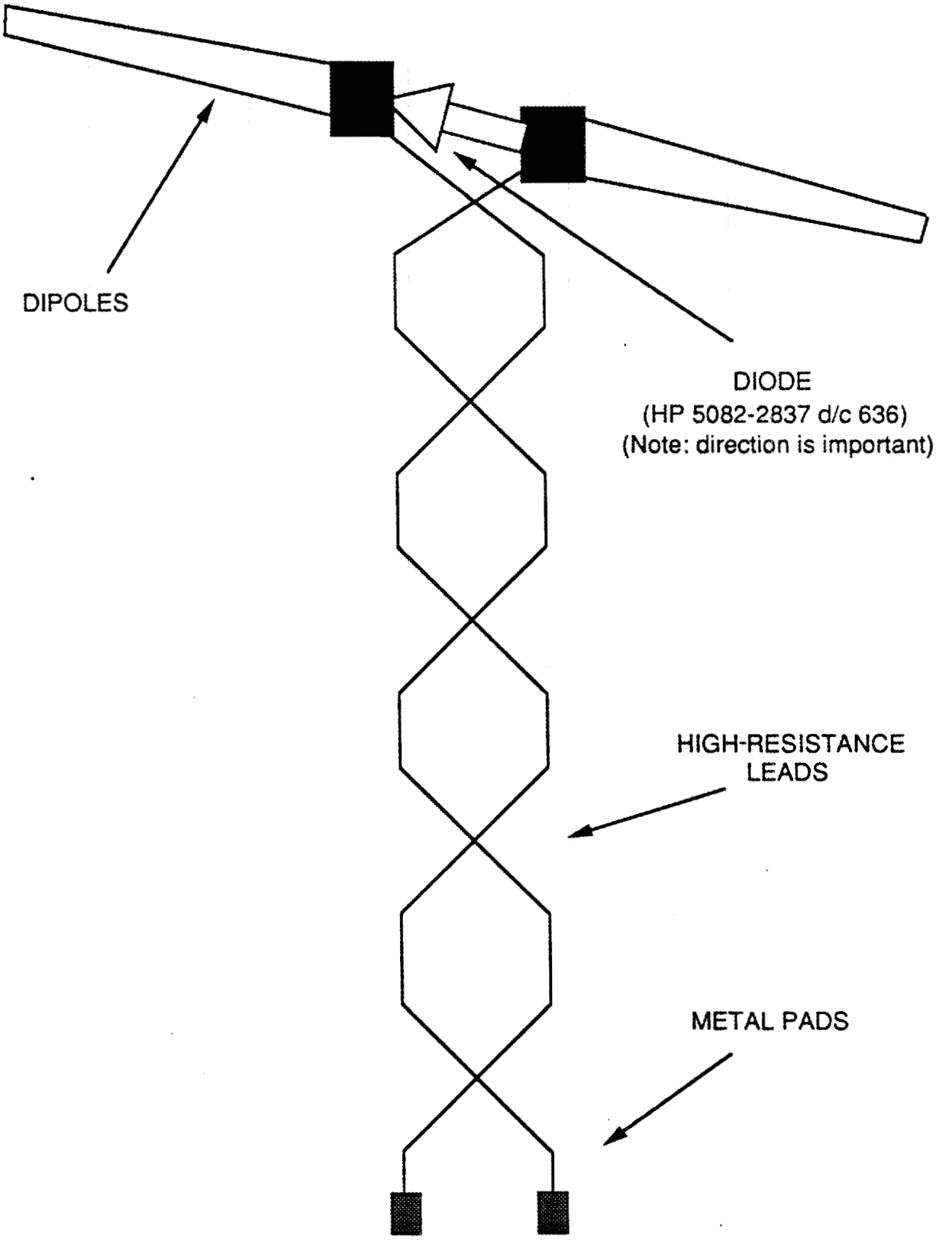

Fig B.2. Top view of dipole substrate.

Testing the diode

1. Using a multimeter, observe the reverse and forward bias resistances. Place the ground lead of the meter on the red lead of the antenna and place the positive lead of the meter on the blue lead of the antenna. The meter should show a resistance in the 200 to 400 kΩ range.

2. Reverse the positions of the meter leads, and the meter should display a greater than 10 MΩ resistance.

3. At the conclusion of the diode test, the antenna subassemblies are complete.

APPENDIX C

CHECKOUT OF DIPOLE ANTENNAS

CHECKOUT OF DIPOLE ANTENNAS

The electrically short dipole antennas are orthogonally mounted on the rf dosimeter. When irradiated, the antennas detect the electric (E) fields and provide a field-strength level to the recording circuitry of the rf dosimeter. Before being placed on the rf dosimeter, the dipole antennas are checked out to ensure that their sensitivity is adequate to detect the E fields.

The following equipment can be used to determine the sensitivity of electrically short dipole antennas:

1. an HP 83592B signal generator,
2. an ENI 550L 50dB amplifier,
3. a Holaday HI-3004 field-strength meter, and
4. a parallel-plate assembly.

The test setup is shown in Fig. C.1. The checkout begins with placing three orthogonal dipole antennas between the upper and lower platforms of the parallel-plate assembly. Each antenna is radiated for ~20 s at 0 dBmW (+ 50dB gain) from 25 to 400 MHz in 25 MHz intervals. Pure dc readings are desired, so a filtering box (as shown in Fig. C.2) is used to eliminate extraneous alternating current (ac) signals. By using the filtering box, the test yields repeatable results.

A field-strength meter is used to measure the E field at the position of the antennas. After normalizing the antennas' output to the E field strength, the sensitivity of the antennas as a unit is calculated and graphed using Lotus 1-2-3 software.

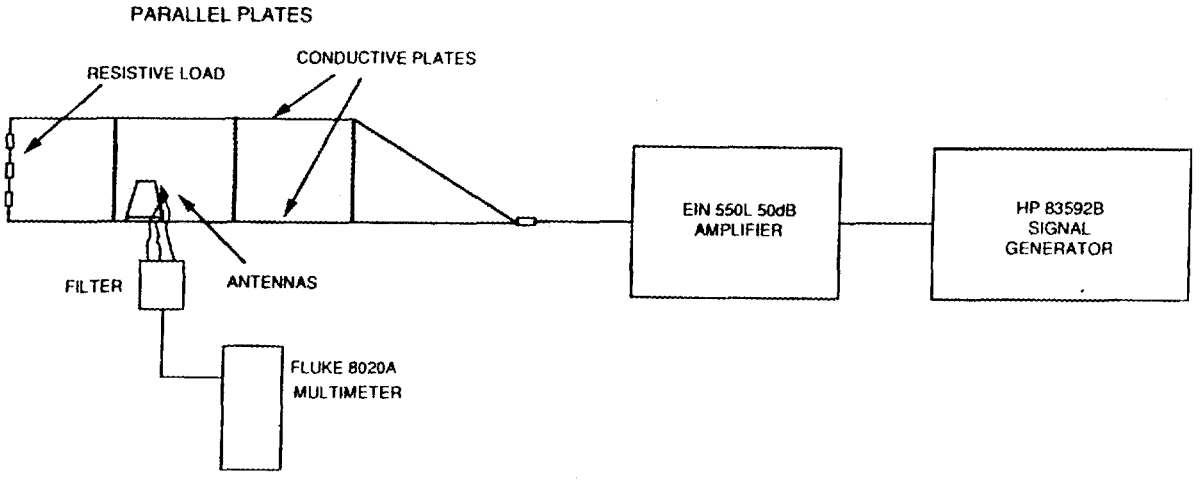

Fig. C.1. Test setup for orthogonal antennas with filter.

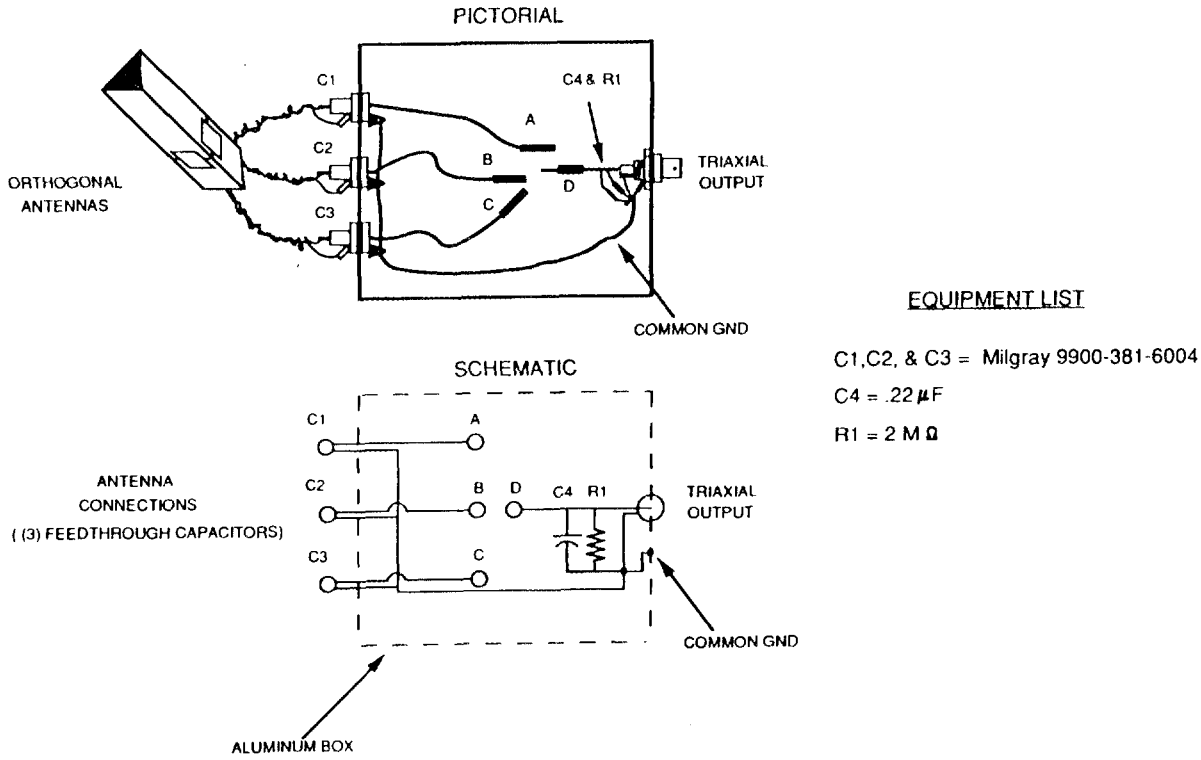

Fig. C.2. Filtering box. Note: Only one antenna can be measured at a time. To select which antenna you would like to measure, attach socket, A, B, or C to pin D.

APPENDIX D

CHECKOUT OF RF DOSIMETER

CHECKOUT OF RF DOSIMETER

This section describes the test procedure for the functional checkout of the rf dosimeter. The test covers the frequency range from 30 to 400 MHz with power-density levels up to 20 mW/cm^2. The test procedure can be separated into three sections: 1) setting up for the test, 2) running the test, and 3) recording the data for the duration of the test. After the data have been recorded, evaluation can be done using a spreadsheet program on an IBM-compatible PC.

1.1 TEST SETUP

The test plan consists of two major parts: 1) a short-term test to ensure that the instrument is functioning properly and 2) a long-term test to check the accuracy and lifetime of the instrument. Both tests require the same equipment and setup but differ in the amount of time required to irradiate the instrument and analyze the data. The basic test setup and test procedure will be discussed in Sects. 1.2 through 3.1.

1.2 TEST CIRCUIT

The basic test setup is shown in Fig. D.1. The setup consists of a parallel-plate transmission line, an rf amplifier, an rf generator, an IBM-compatible PC, and connecting hardware. The parallel-plate transmission line is used to concentrate the electric field in a well-defined manner that is suitable for testing. The generator and amplifier were chosen to make the best use of the frequency range of the parallel plates, which is 0 to 400 MHz. Thus, the 1.5 to 400 MHz amplifier was chosen since the instrument is designed for frequencies above 30 MHz only. Finally, the computer was chosen because of its ease of programming and compatibility with the generating equipment.

1.3 IRRADIATION PARAMETERS

The test uses three frequencies: 30, 100, and 400 MHz. This spans the frequency limit set on the lower end by the instrument and on the upper end by the amplifier. The test uses three amplitude values: −10, −4, and 0 dBm. These span from the lower limit set by the sensitivity of the instrument to the upper limit set by the saturation level of the amplifier. This gives nine combinations of power and frequency for the test. Each setting is held for ~15 s followed by ~45 s of "off" time. The cycle time was found to be ~8.5 min, which equates to ~7 radiation cycles per hour.

2.1 TESTING

The time duration of a test is determined solely by the user. Setup time is required unless the equipment is already connected and running. Using a software program specifically for the test procedure, the user simply types in the desired number of irradiation cycles and starts the test. The instrument is irradiated in this fashion for hours, days, or months until the user removes it for evaluation.

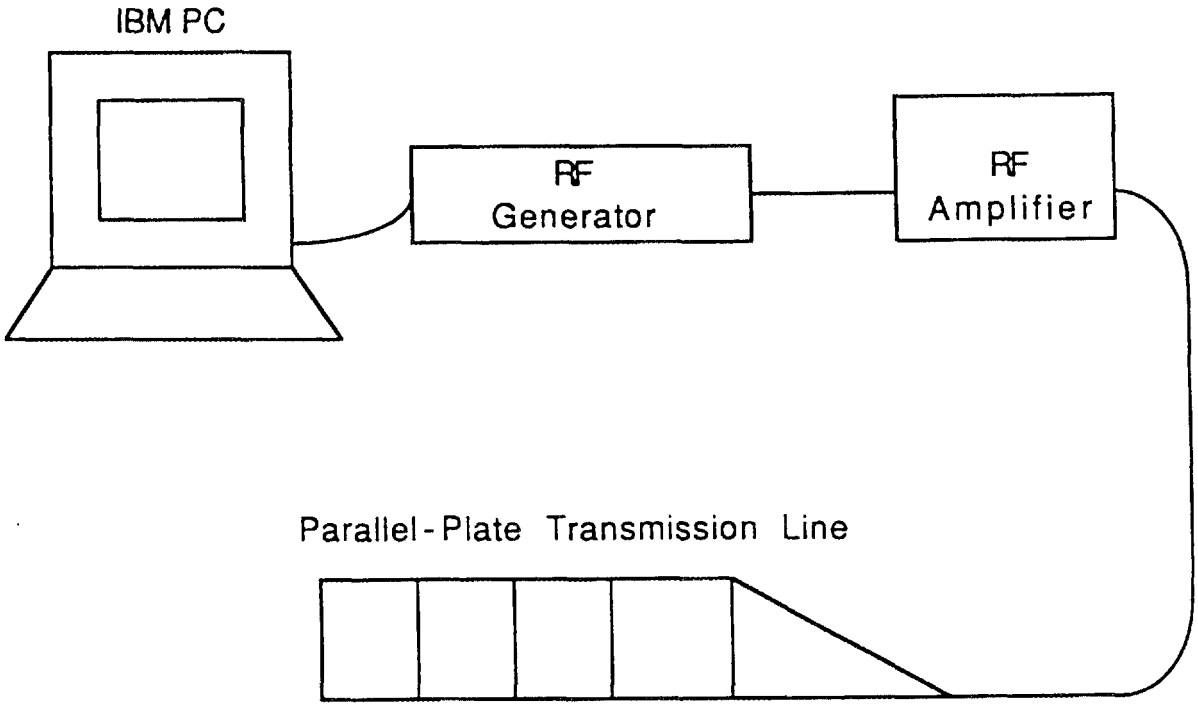

Fig. D.1. Test setup.

The equipment should be set up as shown in Fig. D.1 and turned on. Next, the instrument should be connected to the PC via the interface circuitry to ensure that the microprocessor is operating in its normal mode. This is accomplished by observing the output on the screen of the computer (with the computer operating in the suitable communications mode) and resetting the instrument as many times as necessary to produce the log-on message and at least a few zero readings. Then the instrument should be closed and placed between the parallel plates at a location that best uses its electric fields at all frequencies. That is, any nulls that exist at the higher frequencies should be mapped using a field-strength meter and avoided when locating the instrument for testing.

After resetting the instrument and locating it between the plates, the computer program should be started. First, the program prompts the user for a test title. The title should indicate at least the starting date of the test, the antenna orientation, and the identification number of the instrument. Next, the user inputs the number of irradiation cycles desired. Then the program requests that the user check the placement of the instrument and press a key to start the irradiation cycles. The computer screen indicates how many cycles of the total have been completed. When the desired number of cycles has been completed, the user turns off the amplifier and removes the instrument for evaluation.

3.1 RECORDING DATA

The following are easily followed, step-by-step instructions that allow the data to be successfully retrieved for evaluation.

1. Set up the destination computer.
   A. Connect computer to interface circuitry.
   B. Select communication program from menu.
   C. Select configuration that corresponds to the microprocessor used in the instrument.
   D. If using the SmarTerm software package, type "Alt-C" so that incoming data will be stored in a file.
   E. Type "f" and enter destination file name.
   F. Type "ENTER" again to initiate the capture mode.

2. Turn the interface circuitry on because connecting the instrument to the circuitry in the off condition causes a reset that clears the data from the instrument's memory.

3. Connect the interface circuitry to the instrument.

4. Press the "Reset" button of the interface circuitry.

5. After data has been completely transferred to the destination computer, type "Alt-C" again to end capture mode.

6. Now the file is in the default directory of the communication software and should be backed up in case the next user happens to use the same filename.
   A. Exit the communication program by pressing "Alt-X".
   B. Go to DOS.
   C. If backing up to a floppy diskette, make sure that the diskette is in the correct drive and the drive is ready.
   D. Enter the copy command (i.e., "copy c:\comm\ornl2.dat b:").
   E. Check to see that new file exists (i.e., "dir b:" or type "b:\ornl2.dat").

4.1 EVALUATION

When evaluating the test results, the user will want to examine the data closely. This is accomplished by first passing the data file to a word processing program where the spaces are replaced by return characters and any other preliminary conditioning is performed. The conditioned file then is passed to a spreadsheet program where the hex characters can be converted to decimal numbers and the values vs time can be graphed.

ORNL/TM-11422
Dist. Category UC-406,
Engineering, Equipment, and Instruments

INTERNAL DISTRIBUTION

1. M. L. Bauer
2. H. R. Brashear
3. M. D. Cutshaw
4. D. A. Denning
5. K. W. Drescher
6. B. G. Eads
7. M. N. Ericson
8-17. P. D. Ewing
18. D. N. Fry
19. W. R. Hamel
20-24. R. A. Hess
25-26. B. S. Hoffheins
27. C. M. Horak
28. S. M. Inman
29. P. P. Johnson
30. D. W. McDonald
31. D. R. Miller
32. R. L. Miller
33-34. M. R. Moore
35. L. C. Oakes
36-37. R. W. Rochelle
38. T. R. Subich
39-40. R. S. Thomas
41. R. A. Todd
42. R. E. Uhrig
43. A. Zucker
44. J. B. Ball (Advisor)
45. P. F. McCrea (Advisor)
46. T. B. Sheridan (Advisor)
47-48. Central Research Library
49. Y-12 Technical Library
50-51. Laboratory Records Department
52. Laboratory Records ORNL-RC
53. ORNL Patent Section
54. I&C Division Publications Office

EXTERNAL DISTRIBUTION

55. Assistant Manager for Energy Research and Development, U.S. Department of Energy, Oak Ridge Operations Office, Oak Ridge, TN 37831.
56-57. Office of Scientific and Technical Information, P.O. Box 62, Oak Ridge, TN 37831.
58-107. Given distribution under Category UC-406, Engineering, Equipment, and Instruments.