MARTIN MARIETTA ENERGY SYSTEMS LIBRARIES

3 4456 0325350 1

ORNL/TM-11384

ornl

OAK RIDGE
NATIONAL
LABORATORY

MARTIN MARIETTA

Selection of an Interim Upgrade Strategy for the Process Waste Treatment Plant at Oak Ridge National Laboratory

T. E. Kent
J. F. Villiers-Fisher
F. E. Harrington

OAK RIDGE NATIONAL LABORATORY
CENTRAL RESEARCH LIBRARY
CIRCULATION SECTION
4500N ROOM 175
LIBRARY LOAN COPY
DO NOT TRANSFER TO ANOTHER PERSON
If you wish someone else to see this report, send in name with report and the library will arrange a loan.

MANAGED BY
MARTIN MARIETTA ENERGY SYSTEMS, INC.
FOR THE UNITED STATES
DEPARTMENT OF ENERGY

This report has been reproduced directly from the best available copy.

Available to DOE and DOE contractors from the Office of Scientific and Technical Information, P.O. Box 62, Oak Ridge, TN 37831; prices available from (615) 576-8401, FTS 626-8401.

Available to the public from the National Technical Information Service, U.S. Department of Commerce, 5285 Port Royal Rd., Springfield, VA 22161.

This report was prepared as an account of work sponsored by an agency of the United States Government. Neither the United States Government nor any agency thereof, nor any of their employees, makes any warranty, express or implied, or assumes any legal liability or responsibility for the accuracy, completeness, or usefulness of any information, apparatus, product, or process disclosed, or represents that its use would not infringe privately owned rights. Reference herein to any specific commercial product, process, or service by trade name, trademark, manufacturer, or otherwise, does not necessarily constitute or imply its endorsement, recommendation, or favoring by the United States Government or any agency thereof. The views and opinions of authors expressed herein do not necessarily state or reflect those of the United States Government or any agency thereof.

ORNL/TM-11384

Chemical Technology Division

SELECTION OF AN INTERIM UPGRADE STRATEGY FOR THE PROCESS WASTE TREATMENT PLANT AT OAK RIDGE NATIONAL LABORATORY

T. E. Kent
J. F. Villiers-Fisher*
F. E. Harrington**

*Retired.
**Consultant.

Date Published — January 1991

Prepared for the
Office of Nuclear Waste Management
EX 302 0010

Prepared by
OAK RIDGE NATIONAL LABORATORY
P.O. Box 2008
Oak Ridge, Tennessee 37831-6285
managed by
MARTIN MARIETTA ENERGY SYSTEMS, INC.
U.S. DEPARTMENT OF ENERGY
UNDER CONTRACT NO. DE-AC05-84OR21400

MARTIN MARIETTA ENERGY SYSYEMS LIBRARIES

3 4456 0325350 1

CONTENTS

		Page
	ABSTRACT	1
1.	INTRODUCTION	1
2.	BACKGROUND	2
3.	EVALUATION OF PWTP UPGRADE FLOW SHEETS — FIRST PHASE	6
3.1	PWTP PRIMARY EQUIPMENT UPGRADES	6
3.1.1	Solids Removal Equipment and Feed Pumps	6
3.1.2	Softener Replacement	7
3.1.3	Ion-Exchange Column Monitors	11
3.1.4	Resin Dewatering	11
3.2	PWTP EVAPORATOR SYSTEM UPGRADES	11
3.2.1	PWTP Evaporator Operation	12
3.2.2	Condensate Storage Tank	12
3.2.3	Eluate and Fractionation and Solidification Systems	14
3.3	PWTP EQUIPMENT SUMMARY	16
3.4	CS-100 FLOW SHEET	16
3.4.1	Operating the CS-100 System	18
3.4.2	Waste Generation and Chemical Requirements	18
3.5	HCR-S/ZEOLITE FLOW SHEET	19
3.5.1	pH Adjustment	20
3.5.2	New Zeolite System	20
3.5.3	Operating the HCR-S/Zeolite System	23
3.5.4	Waste Generation and Chemical Requirements	23

CONTENTS (cont'd)

Page

3.6 COST ESTIMATE 24

3.6.1 Cost-estimating Methods and Results 25
3.6.2 Feasibility of Eluate Fractionation and Solidification Systems 26

4. SECOND PHASE FLOW SHEET EVALUATION 30

4.1 UPGRADE EQUIPMENT MODIFICATIONS 31

4.2 FINAL COST ESTIMATE 31

4.3 FLOW SHEET SELECTION CONCLUSIONS 37

5. SUMMARY OF FINAL UPGRADE FLOW SHEET 37

6. REFERENCES 39

LIST OF FIGURES

Figure		Page
1	Current PWTP system flow diagram	4
2	L-1A precipitator-clarifier	8
3	Typical solids-contact softener	10
4	Current PWTP ion-exchange regeneration and acid recovery system	13
5	Ion-exchange regeneration and acid recovery system with potential upgrades	15
6	Initial CS-100 flow sheet	17
7	Proposed zeolite system for the HCR-S/zeolite upgrade	21
8	Initial HCR-S/zeolite flow sheet	22
9	Final CS-100 flow sheet	35
10	Final HCR-S/zeolite flow sheet	36

LIST OF TABLES

Table		Page
1	Initial cost evaluation: HCR-S/zeolite vs CS-100 systems	27
2	Final cost evaluation: HCR-S/zeolite vs CS-100 systems	32

SELECTION OF AN INTERIM UPGRADE STRATEGY FOR THE PROCESS WASTE TREATMENT PLANT AT OAK RIDGE NATIONAL LABORATORY

T. E. Kent, J. F. Villiers-Fisher, and F. E. Harrington

ABSTRACT

The principal aim of current changes in the liquid waste handling systems at the Oak Ridge National Laboratory (ORNL) is to reduce liquid low-level waste (LLLW) volumes and to meet increasingly stringent discharge regulations. Proposed improvements at the facility's Process Waste Treatment Plant (PWTP) will have a significant impact on the amount of LLLW generated at ORNL. These improvements will also be important for ensuring that the plant operates under the reduced discharge limits for radionuclides imposed by Department of Energy (DOE) Order 5400.5. Construction of a new PWTP that will completely decouple the process waste and LLLW systems is being proposed. Because of the time required to fund and construct a new PWTP, the existing plant must be improved to reduce waste generation, to expand capacity, and to comply with the lower discharge limits. The economic evaluation performed in this study guided the decision to upgrade the PWTP by improving the existing softening/ion-exchange systems for ^{90}Sr removal and adding a zeolite system for ^{137}Cs removal. This strategy will reduce LLLW produced at the PWTP by as much as 70% and increase the amount of solid waste produced by about 30%. Disposal costs are expected to decrease by over 50%.

1. INTRODUCTION

The principal aim of current changes in the waste handling systems at Oak Ridge National Laboratory (ORNL) is to minimize liquid low-level waste (LLLW) volumes and to meet increasingly stringent discharge regulations. Improvements at the Process Waste Treatment Plant (PWTP) will result in a reduction in the amounts of secondary LLLW generated at the plant. These improvements will also be important for ensuring that the plant operates under the new discharge limits for ^{137}Cs and ^{90}Sr imposed by U.S. Department of Energy (DOE) Order 5400.5.

The improvements, funded by General Plant Projects (GPP), are designed to provide effective treatment of ORNL process wastewaters until funding is available for a complete upgrade or replacement of the plant. Extensive studies have been performed prior to this work to determine the best option for the PWTP upgrade to meet short- and long-term objectives.[1,2,3,4] The results indicate that the existing PWTP eventually should be replaced with a new zeolite, ion-exchange system. The zeolite system will simplify plant operation and produce only one waste stream—spent zeolite. The amount of waste and cost of disposal will be reduced significantly. The construction of the zeolite system, however, will require line-item capital funding and it will not be in operation for 8 to 10 years. In the short term, the existing plant may be modified and improved using one of two chosen strategies, neither of which will radically change the existing operations. The improved plant must reduce LLLW generation, increase process waste feed capacity, and increase ^{137}Cs removal capacity. This report summarizes the activities that led to the selection of the interim upgrade strategy.

2. BACKGROUND

PWTP operation has changed as a result of operational difficulties and changes in disposal practices. Since 1976, the ORNL PWTP has used organic ion-exchange resins to remove radioactive contaminants from process wastewater. From 1976 until 1981, Duolite CS-100@ weak acid cation-exchange resin (Rohm and Haas) was used to remove ^{90}Sr and ^{137}Cs from process waste. The CS-100 resin contains a phenolic group that will remove cesium when activated at pH 11.9. A water softener was used ahead of the ion-exchange resin columns to remove calcium and magnesium, which otherwise would have reduced the resin's capacity to remove the radionuclides. Once the resin was exhausted, it was regenerated by eluting with a solution of nitric acid. The ion-exchange eluate was concentrated by evaporation and disposed of as LLLW. This process was known as the Scavenging Precipitation Ion Exchange (SPIX) process.[5] The water softener used in the SPIX system produced a radioactive sludge composed of precipitated calcium carbonate and magnesium hydroxide contaminated with ^{90}Sr, ^{137}Cs, and other radionuclides. Storage space for this sludge at Solid Waste Storage Area No. 5 (SWSA 5) eventually became limited. In addition, resin degradation problems and operational problems were experienced with use of

the CS-100 resins. In 1981, the water softener was removed from service, and the ion-exchange resin was replaced with Dowex HCR-S strong acid cation-exchange resin (Dow Chemical Co.), a product that is more resistant to degradation, is easier to use, and has a higher capacity for ^{90}Sr. Since ^{137}Cs was entering the plant at concentrations lower than the discharge limit, a process to remove it was not needed at that time. Without the softener to remove hardness compounds, the resin became exhausted quickly with calcium and magnesium, which compete with ^{90}Sr. As a result, the resin had to be regenerated frequently, producing far greater quantities of nitric acid eluate LLLW. The eluate was cost-effectively treated by evaporation and disposed of in the ORNL LLLW system using the hydrofracture process. However, the use of the hydrofracture process was discontinued in 1984, and near-term disposal of LLLW became impossible. Consequently, the water softener previously used in the SPIX system was put back into service to reduce the amount of LLLW eluate produced by regeneration of the ion-exchange columns. In addition, a filter press was added to dewater and reduce the volume of the softener sludge. The sludge is currently stored in 55-gal drums at the Oak Ridge K-25 Site.

Due to an upset in the LLLW evaporator in 1986, abnormally high concentrations of ^{90}Sr and ^{137}Cs were added to the process wastewater. To deal with the upset, a temporary flow-through column containing inorganic zeolite was added to pretreat the PWTP feed; it removed most of the ^{90}Sr and ^{137}Cs prior to normal processing. This system has remained in place to deal with possible future upsets and to provide extra feed capacity for the plant in the event of abnormally high feedwater flow rates. A flow diagram of the PWTP system as of February 1989, is shown in Fig. 1.

Although the quantities of LLLW generated at PWTP were reduced significantly when the softener and filter press were added, the disposal of LLLW continues to be a problem because of the limited storage capacity of the Melton Valley Storage Tanks (MVST) used to store LLLW evaporator concentrate. The LLLW system at ORNL collects liquid-waste streams from all areas of the plant and reduces the collected volume of waste by evaporation. The evaporator overheads are directed to PWTP for further processing, and the bottoms

---

@Trademark of Rohm and Haas

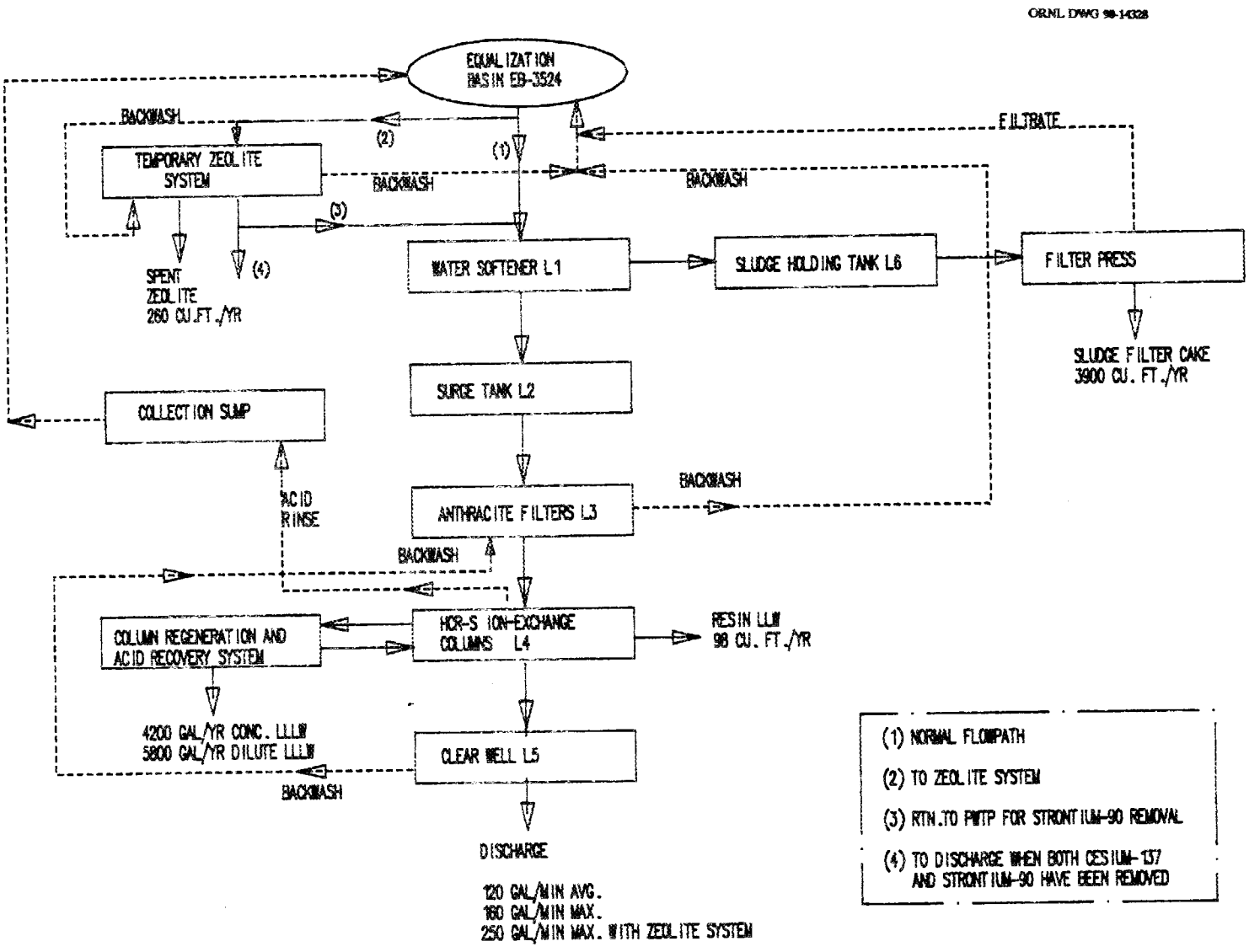

Fig. 1. Current PWTP system flow diagram.

(concentrate) are stored at the MVST. Options for further waste treatment and disposal of the MVST waste are being developed. An interim solidification procedure was recently used to process 176,438 L (46,615 gal) of LLLW stored in these tanks.[6] This provided additional storage capacity, but the tanks are expected to be filled to capacity within 3 years at the present generation rate. The ORNL PWTP generates both concentrated and dilute LLLW. The dilute portion is evaporated in the LLLW evaporator, and the concentrate is combined with LLLW evaporator concentrate before transfer to MVST. PWTP upgrades include equipment that will reduce the volume of PWTP wastes added to the LLLW system.

Not only must secondary LLLW be reduced because of the present limited storage and the treatment problems, but also DOE Order 5400.5 requires that the current discharge of many radionuclides be reduced. This will necessitate upgrading the PWTP's capability to remove radionuclides. PWTP is designed to remove radioactive contaminants typically present in process wastewater and groundwater at ORNL. The principal contaminants are ^{90}Sr and ^{137}Cs. The current PWTP discharge limits for these contaminants are 11 Bq/L and 740 Bq/L, respectively. DOE Order 5400.5 requires that these limits to be changed to 37 Bq/L for ^{90}Sr and 111 Bq/L for ^{137}Cs. The ^{90}Sr limit has been increased slightly and will not affect PWTP operation. Because the typical ^{137}Cs concentration in the process waste feed is about 200 Bq/L, the new limit of 111 Bq/L necessitates changes to increase PWTP's ^{137}Cs removal capacity.

Initial studies addressing a PWTP upgrade [1,2,3,4] determined that two upgrade options could be used for short-term improvements to the plant. For either of the options, the basic flow sheet of the plant remains the same while improvements are made in specific areas. One option involves continuing the current use of HCR-S strong acid cation-exchange resin for removal of ^{90}Sr combined with improved ^{137}Cs removal using zeolites. The second option involves replacing the HCR-S resin with a CS-100 weak acid cation-exchange resin that can remove both ^{90}Sr and ^{137}Cs. A feasibility study was performed to compare the two options and to determine the best strategy for the PWTP upgrade. The study included an order-of-magnitude cost comparison as well as an evaluation of the operating advantages of each system. In addition, particular attention was focused on the operation of the PWTP nitric acid recovery system and on options for completely eliminating the production of LLLW from this source. The results of the study are summarized below.

3. EVALUATION OF PWTP UPGRADE FLOW SHEETS—FIRST PHASE

Because both of the upgrade options specify the use of much of the existing PWTP equipment, the existing equipment had to be evaluated to determine its potential for continued use for the next 10 years. The replacement of Equalization Basin 3524 (EB 3524) with the Bethel Valley Storage Tanks (BVST) for storage of process waste was also considered with regards to the impact the new storage system will have on PWTP operation. Equipment was chosen that might be needed to prevent potential BVST problems. After researchers evaluated the existing equipment and the BVST impacts, the needs of the individual upgrade options were determined, and the systems were compared from operational and economic standpoints.

A two-phased approach was necessary for the study because of funding constraints that became a factor after the initial upgrade evaluation. In the initial phase, the flow sheets were developed and compared with little emphasis on costs. In the second phase, further flow sheet development was necessary to reduce costs to GPP funding limits. The flow sheets were compared once again after the second phase of study.

3.1 PWTP PRIMARY EQUIPMENT UPGRADES

As a basis for the study, the two potential upgrade flow sheets were designed to remove both ^{90}Sr and ^{137}Cs to the new limits set by DOE Order 5400.5 at an average flow rate of 9.5 L/s (150 gal/min) and a maximum flow rate of 19 L/s (300 gal/min). The process was assumed to continue operations for 10 years. The current system was examined to determine the equipment that would need to be replaced or added for either of the upgrade options. The effects of the BVST system, soon to be replacing EB 3524, also were taken into consideration as equipment needs were developed.

3.1.1 Solids Removal Equipment and Feed Pumps

The BVST will replace EB 3524 for storage of process wastewater and transfer of feed to PWTP. One of the principal impacts of the use of the tanks will be the manner in which suspended solids and precipitates are distributed in the system. A considerable amount of

solid material has settled in EB 3524 because of the recycle of filter backwash water and the addition of water from the PWTP sump. The filter backwash water contains large amounts of suspended solids and the high pH of the sump water causes localized precipitation of calcium and magnesium from the wastewater. When the BVST system is placed in service, all solids will be recirculated in the PWTP system with the softener acting as the principal settling and removal point. The solids could potentially accumulate in the bottom of the BVST tanks, reducing their usable volume and creating hot spots. To keep solids from accumulating in BVST, a 75,700-L (20,000-gal) settling tank was recommended as an additional point for solids removal. This tank would accumulate backwash water, neutralized column rinse water, and sump water from PWTP, allowing solids to settle prior to recycling the water back into BVST. The solids collected in the bottom of the settling tank would be transferred to the existing softener sludge holding tank, L6, which feeds the filter press.

The recirculating solids could also create problems at the softener. Large objects could potentially plug underflow lines and interfere with moving parts. To ensure the removal of large objects from the waste stream, the addition of two sand filters was recommended upstream of the softener.

3.1.2 Softener Replacement

Over the years, the existing softener, L1, has proven to be difficult to operate and inconsistent in reducing total hardness concentrations in the effluent. Because of the design of the unit and the processing flow rates, the wastewater is not allowed sufficient sludge blanket contact and retention time for optimum precipitation of calcium and magnesium. A drawing of the existing unit is shown in Fig. 2. The flow pattern through the sludge blanket is unstable and channeling of wastewater through the blanket is a common occurrence. The resulting high-hardness feed to the ion-exchange columns has produced large amounts of ion-exchange eluate that ultimately is transferred to the LLLW system.

Replacement of the existing softener is necessary in either system upgrade to increase the PWTP feed capacity and to reduce LLLW generation. The softener is a critical component of the system because of its impact on the amount of secondary LLLW that is generated. The calcium and magnesium ions in the softener effluent occupy sites on the ion-

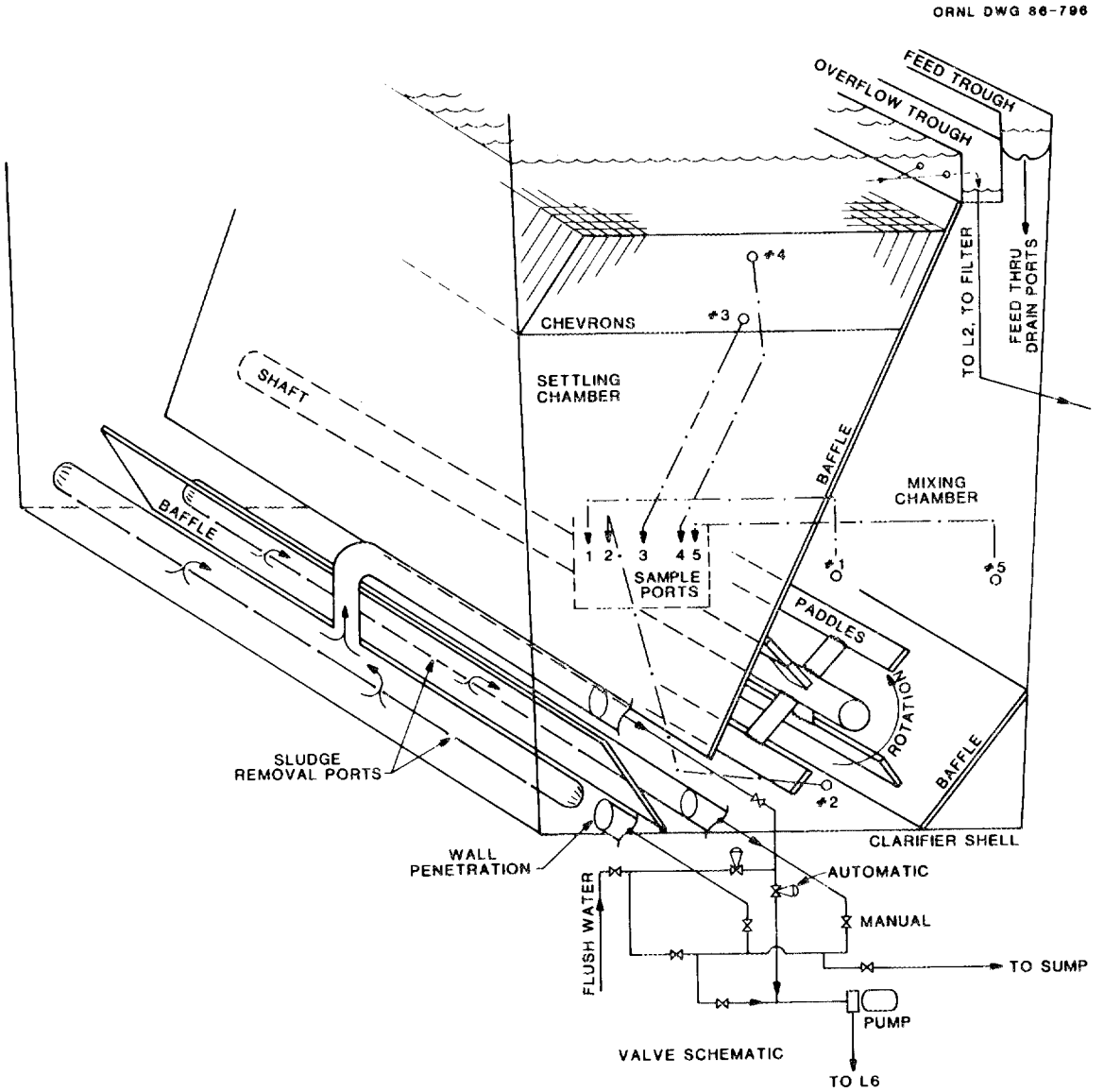

Fig. 2. L-1A Precipitator - Clarifier.

exchange resin that otherwise would be available for removal of the radionuclides. Lower concentrations of calcium and magnesium in the softener effluent extend the life of the ion-exchange columns, reduce the frequency of column regeneration, and thereby reduce the amount of ion-exchange eluate LLLW. The maximum design flow rate for the softener is 11 L/s (175 gal/min). With the chevron tube settler installed in the softener, the maximum flow rate achievable is 15 L/s (240 gal/min). The chevrons are not used, however, due to maintenance difficulties and the need to visually monitor the sludge blanket. In current practice, the softener can be run successfully at flow rates up to 10 L/s (160 gal/min). At rates greater than this, total hardness of the effluent increases drastically.

When flow rates greater than 10 L/s (160 gal/min) are required, treatment of the process waste becomes more complex and costly. In periods of heavy rain, it is sometimes necessary to process the waste at a feed flow of 12.6 L/s (200 gal/min). The existing plant can only process a maximum of 10 L/s (160 gal/min) because of the softener, so the temporary zeolite column is used to treat additional wastewater flows up to 5.7 L/s (90 gal/min) in parallel with the plant. The zeolite column will remove both ^{90}Sr and ^{137}Cs from the wastewater; however, the temporary system (due to funding and space limitations) could not be designed for optimum zeolite efficiency. A column in the temporary system will last no longer than two weeks. Zeolite is a nongenerative material, and the columns are designed to act as disposable containers. The inefficient use of the zeolite and the disposable columns becomes very expensive.

A sketch of a solids-contact softener of the type proposed for the upgrade is shown in Fig. 3. The softener must be designed to handle a maximum flow rate of 19 L/s (300 gal/min) and to provide adequate residence time in the sludge blanket for optimum precipitation of water hardness. In addition, channeling of wastewater through the sludge blanket must be curtailed by maintaining a uniform underflow of sludge by positive mechanical means such as the sludge rake shown in the sketch.

Because of the increased flow rate and the increased pressure requirements due to additional sand filters, the PWTP feed pumps at BVST are recommended to be upgraded or replaced.

ORNL DWG 90-14329

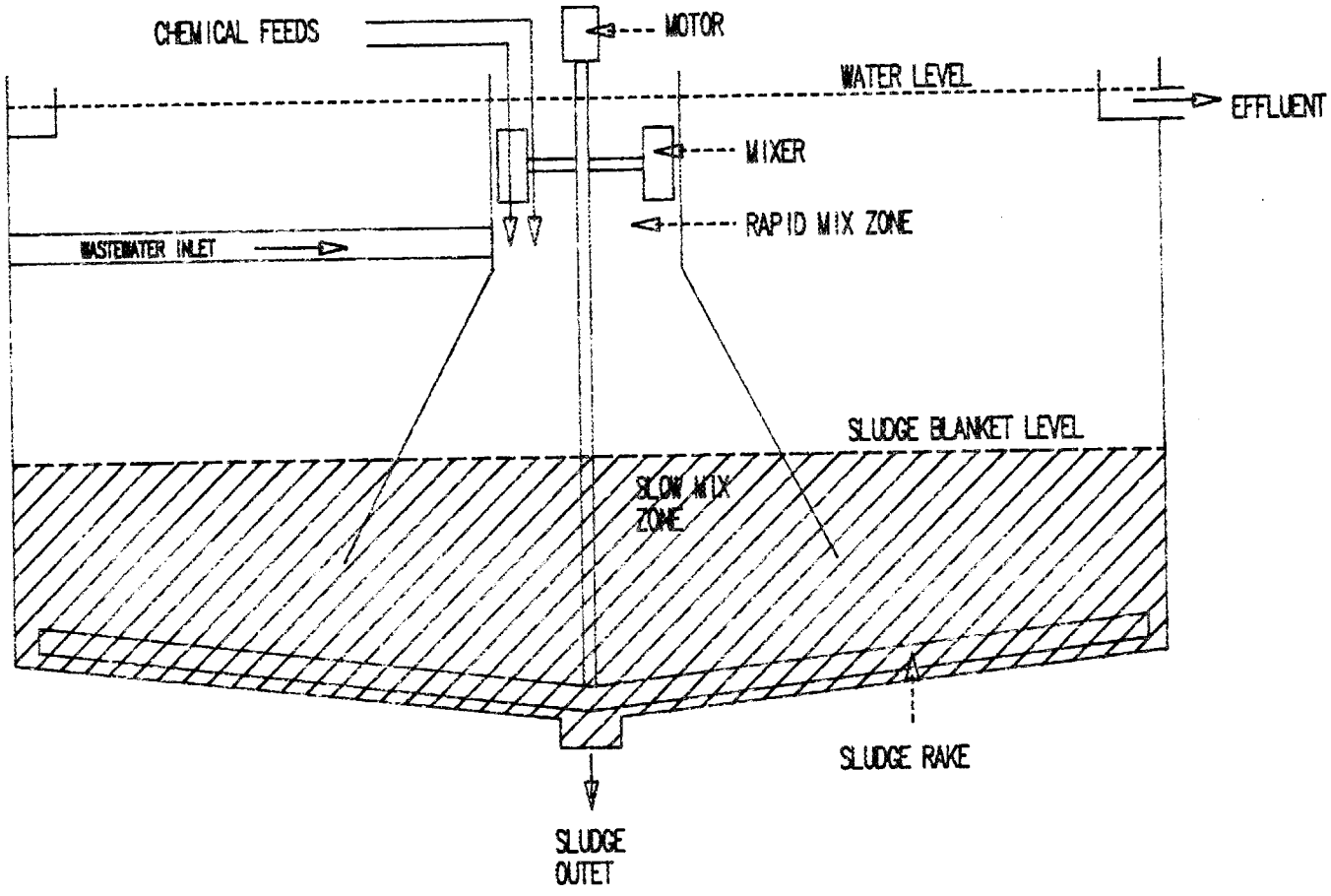

Fig. 3. Typical solids-contact softener.

3.1.3 Ion-Exchange Column Monitors

The continued use of the existing ion-exchange resin columns is recommended in both of the upgrade options, though an improvement in flow monitoring capability is needed for this system. At present, the throughput of each ion-exchange column cannot be measured and is assumed to be equal when two columns flow in parallel. When the columns are run in parallel, the actual flow through each column will not be the same because of unavoidable differences in the column flow characteristics. It is therefore impossible to determine the working capacity of the resin in a particular column. For this upgrade installation of flow-measuring and recording instrumentation for each individual column is recommended. This instrumentation will improve the efficiency of resin usage and the ability to identify problems in individual columns.

3.1.4 Resin Dewatering

In both of the proposed flow sheets, there is a sizeable increase in the amount of solid ion-exchange waste generated. In the CS-100 system, a considerable amount of CS-100 resin waste is produced and the HCR-S/zeolite system produces spent zeolite waste. In either case, the resin waste must be dewatered before disposal. Resin dewatering is likely to be time-consuming and should be performed as a separate operation elsewhere in the PWTP or ORNL facility. The equipment necessary for this operation will probably include air blowers, air heaters, coolers, and condensers for vaporizing water from the resin and recovering the water for disposal. A dewatering system was recommended for both of the upgrade options.

3.2 PWTP EVAPORATOR SYSTEM UPGRADES

Several improvements were identified for the PWTP nitric acid recovery evaporator system and were evaluated for use in the flow sheets. These options could minimize or eliminate all secondary LLLW generated by PWTP. A description of the evaporator operation, the proposed improvements, and the benefits are summarized below.

3.2.1 PWTP Evaporator Operation

The PWTP evaporator is used to recover a portion of the nitric acid used to regenerate the ion-exchange resins and also to reduce the volume of LLLW. A flow diagram of the ion-exchange regeneration and nitric acid recovery system is shown in Fig. 4. Currently, 4542 L (1200 gal) of nitric acid at a concentration of 2.7 N is used to regenerate the ion-exchange resin in one column. The resulting eluate solution contains calcium, magnesium, cesium, and strontium salts with an excess of nitric acid. The unreacted portion of the nitric acid is recovered by evaporation. The nitrate salts are concentrated in the evaporator and transferred to the LLLW system for disposal.

After processing three batches (3600 gal) of the eluate in the evaporator, 946 L (250 gal) of concentrated nitrate salts are generated; 11,355 L (3000 gal) of dilute nitric acid are recovered in the makeup acid tank L7; and 1324 L (350 gal) are left unprocessed in the evaporator feed tank L9. The existing one-stage evaporator is not designed to recover enough of the nitric acid for total recycle; consequently, the evaporator condensate is too dilute to use as regenerant. Fresh concentrated nitric acid must be added to tank L7 and mixed with the condensate, which is then used as ion-exchange regenerant solution. Excess eluate is left in the evaporator feed tank L9 so that fresh nitric acid can be added to L7 without exceeding the 4542 L (1200 gal) batch size. Because there is no place to store the extra 1325 L (350 gal) of eluate left in L9, it is currently neutralized with sodium hydroxide and transferred to the LLLW evaporator feed tank. Here it is combined with less-concentrated LLLW from other processes at ORNL, evaporated, and stored. The nitrate salt concentrate from the PWTP evaporator is transferred to the LLLW concentrate storage tank.

3.2.2 Condensate Storage Tank

The addition of an extra condensate storage tank with a metering pump at the PWTP evaporator system will significantly reduce LLLW generation. With the addition of this equipment, the extra eluate that collects in L9 can be processed in the PWTP evaporator and the surplus condensate stored and recycled into the process waste flow stream ahead of the softener. The metering rate of the condensate to the softener must be adjusted to maintain the concentration of nitrates in the PWTP effluent to less than 10 ppm. The relatively small

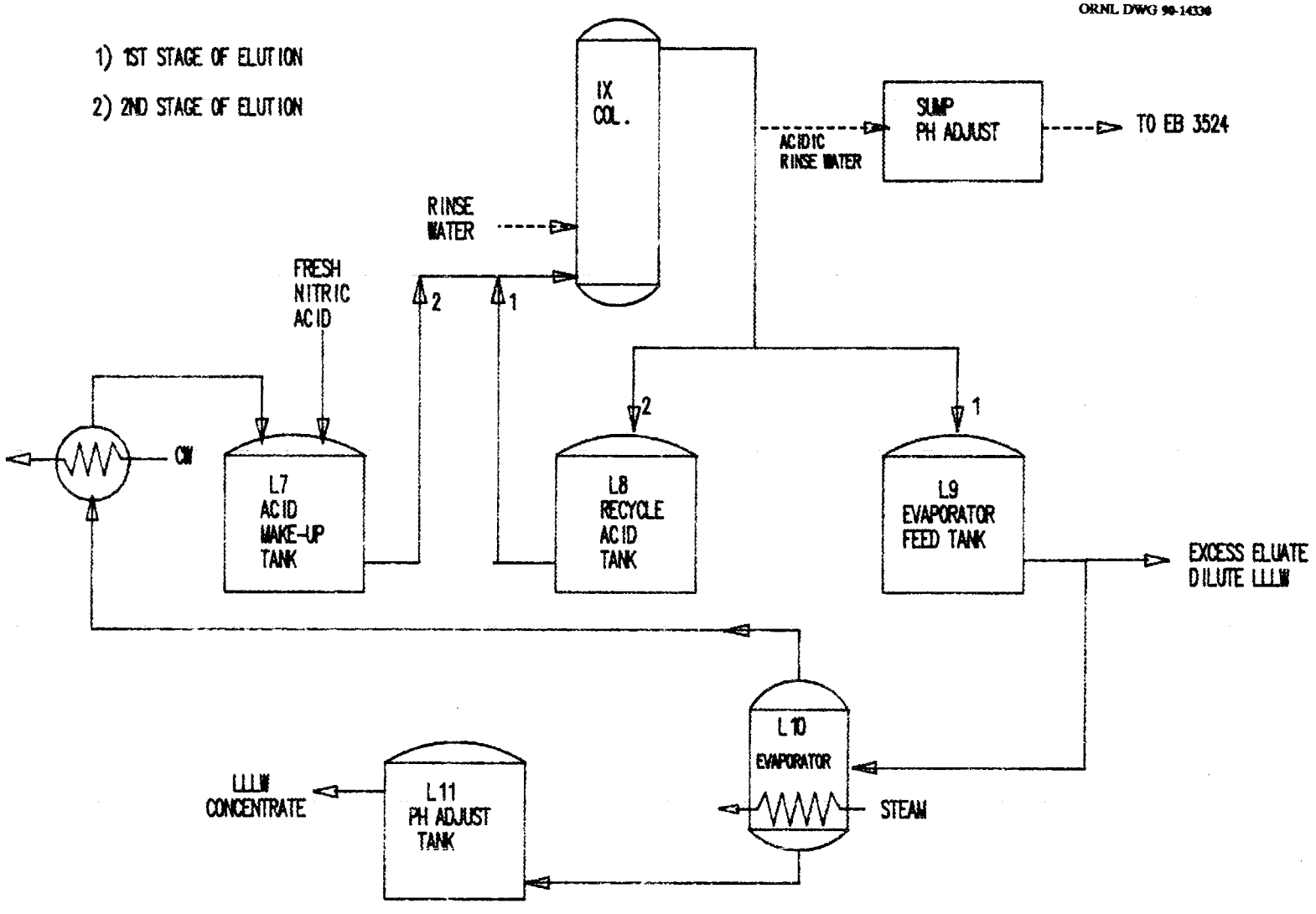

Fig. 4. Current PWTP ion-exchange regeneration and acid recovery system.

amount of additional concentrated eluate from evaporator processing will be transferred to the LLLW system.

A significant reduction in the amount of concentrated LLLW sent to MVST is expected with the addition of the extra condensate holding tank at PWTP. Most of the feed to the LLLW system from other sources at ORNL is very dilute with specific gravities close to 1.0. The LLLW evaporator concentrates the feed to a specific gravity of 1.2. The specific gravity of the excess eluate from PWTP is usually greater than 1.1; therefore, the LLLW evaporator does not reduce the PWTP eluate volume by a substantial amount (estimated 25% volume reduction).[7] The PWTP evaporator is capable of a 13-to-1 volume reduction. If the excess eluate were processed in the PWTP evaporator, the volume of concentrated LLLW contributed by PWTP could be reduced by over 50% for either of the proposed upgrade strategies. Figure 5 shows a diagram of the PWTP column regeneration and evaporator system with the proposed condensate holding tank. Other potential evaporator system improvements, also shown in Fig. 5, are described below.

3.2.3 Eluate and Fractionation Solidification Systems

As discussed in Sect. 3.2.1, the PWTP ion-exchange columns are regenerated with a solution of nitric acid. This acid is partially recovered by collecting the PWTP evaporator condensate. Additional fractionation of the ion-exchange eluate would eliminate the need for the condensate storage tank discussed in Sect. 3.2.2 and could result in complete recovery of unreacted nitric acid. In addition, removal of the excess acid from the eluate concentrate could produce a product that might be solidified at PWTP and thereby eliminate the production of LLLW.

Laboratory-scale scouting tests were performed to reduce the volume of and to solidify the PWTP evaporator bottoms in lime.[8] The volume of the present evaporator bottoms was reduced 41% by additional evaporation followed by lime addition to neutralize the small quantity of acid left in the concentrate. The material solidified at 45°C at 60% of the original volume. The resulting product, however, was a mixed waste due to the chromium concentration.

Additional research and development is needed to determine the leachability of the solidified evaporator bottoms and to test stabilization techniques. The logical location for

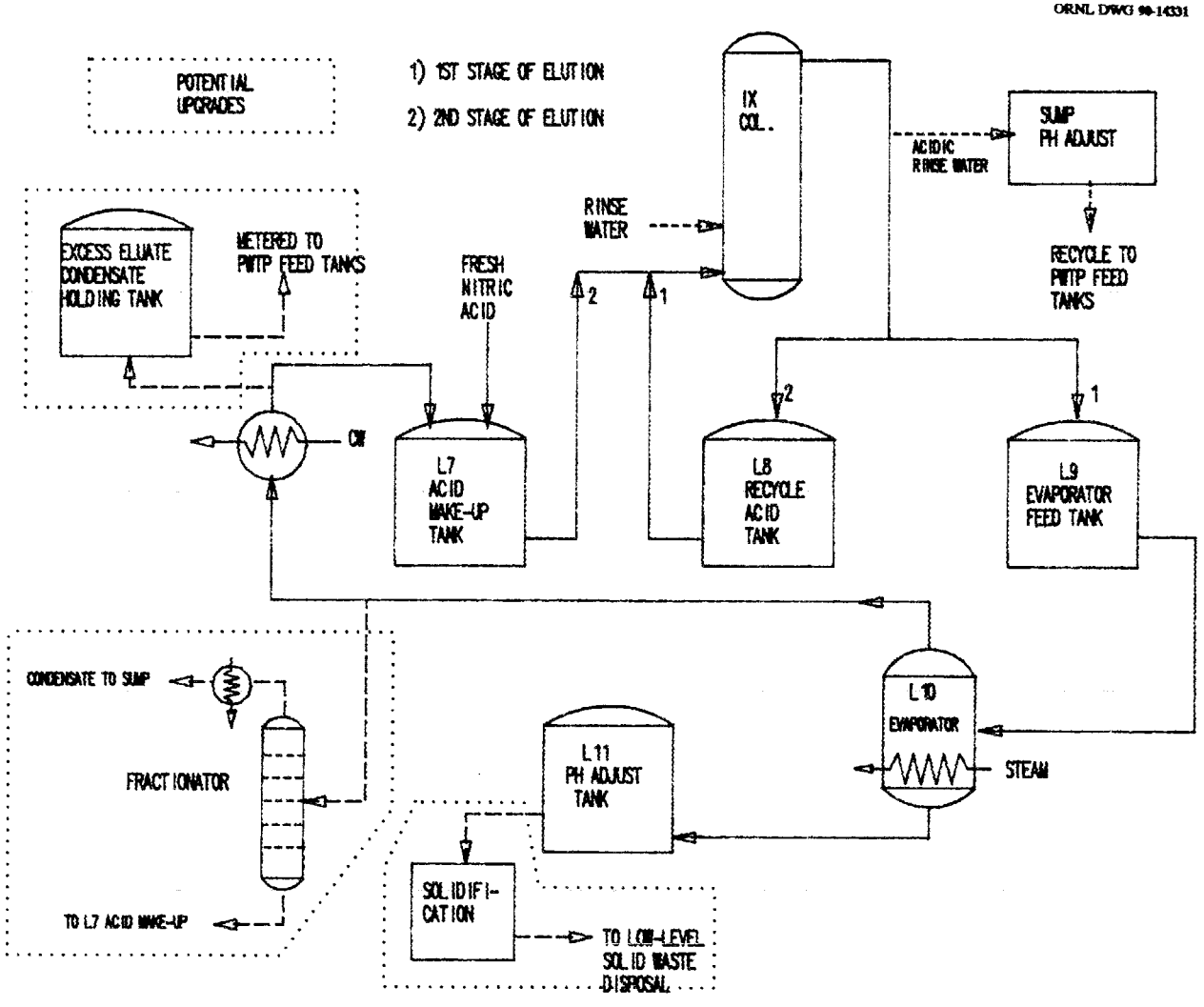

Fig. 5. Ion-exchange regeneration and acid recovery system with potential upgrades.

the solidification equipment would be in the evaporator room of Bldg. 3544, but space is currently very limited. A separate facility would need to be constructed for solidification operations adjacent to Bldg. 3544.

A discussion of the economics and the time constraints involved in adding a fractionator and solidification system to PWTP is included Sect. 3.6.2. Since limitations in funding and the short time frame for equipment use make fractionation and solidification upgrades unfavorable, the condensate holding tank discussed in Sect. 3.2.2 was recommended for the proposed flow sheets.

3.3 PWTP EQUIPMENT SUMMARY

A list summarizing the initial estimate of equipment needs at PWTP for both the CS-100 and HCR-S/zeolite upgrade options is given below:

settling tank
sand filters (2)
PWTP feed pumps (2)
solids-contact softener
condensate storage tank
flow meters (4) and recorder for ion-exchange columns
resin dewatering equipment

3.4 CS-100 FLOW SHEET

The CS-100 upgrade would involve installing the equipment listed in Sect. 3.3 in addition to replacing the HCR-S resin with the CS-100 resin. The flow sheet for this system is shown in Fig. 6. The SPIX system was operated at PWTP from April 1976 to September 1981 using CS-100 resin with the existing softener. Extensive research and development was performed for the SPIX system in 1963[5] and in 1980[10,11] to optimize system operation and to determine the limitations of the process. Actual plant operating data and information from the research reports were used as a basis for evaluating the CS-100 flow sheet.

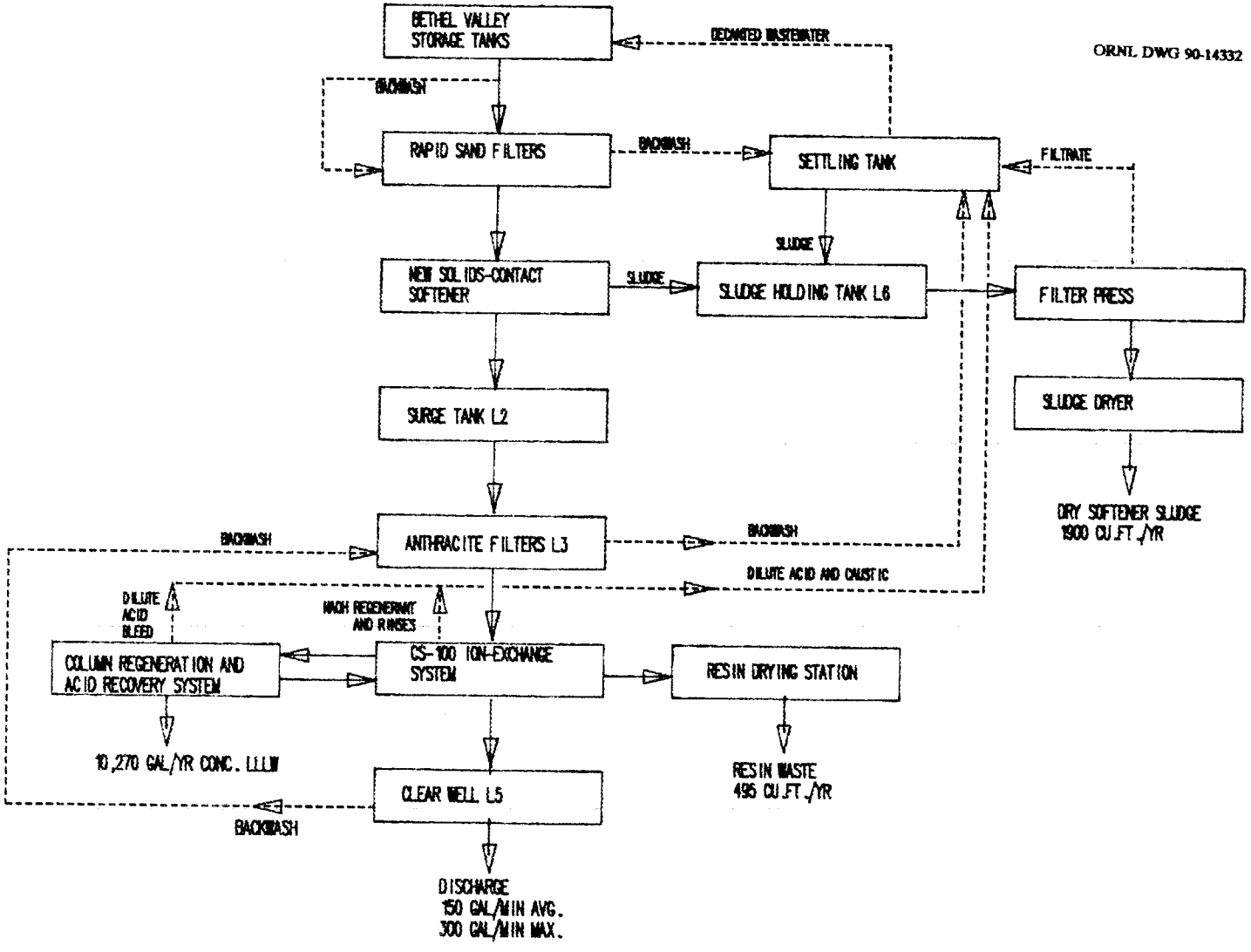

Fig. 6. Initial CS-100 flow sheet.

3.4.1 Operating the CS-100 System

The CS-100 system would be relatively easy to implement; however, the plant would be far more complex to operate than the current process or the past SPIX process. The existing ion-exchange columns could be reloaded immediately with CS-100 resin using normal plant procedures and both ^{137}Cs and ^{90}Sr could be removed from the wastewater to comply with DOE Order 5400.5 limits. However, there are additional processing steps that are now necessary that were not being performed in the past. In the former SPIX operation, the filter press was not available for softener sludge processing. The sludge was simply pumped to a holding pond at SWSA 5. Current operation of the CS-100 system would require the added use of the filter press, which involves precoating the press, unloading processed filter cake into drums, cleaning the press, and handling the drums. These operations are performed usually two times per shift in addition to the extra maintenance involved with the sludge pumps and filter press hydraulics. Compared to current operation at the plant, the frequency of column regenerations and eluate evaporations would be more than doubled with CS-100 use. The additional operation of replacing resin in the ion-exchange columns would be necessary every 30 to 40 days compared to fewer than once per year for current operations. With all these additional tasks, routine operation may require extra personnel, and control of the system may be more difficult when equipment problems arise.

3.4.2 Waste Generation and Chemical Requirements

The longevity of the CS-100 resin was determined in several pilot-plant and laboratory studies performed for the SPIX process.[5] The reports indicate that breakthrough of ^{137}Cs can be expected after a column throughput of 2000 bed volumes using new resin. The resin is expected to last no more than 20 loading/regeneration cycles before its capacity is significantly reduced due to degradation. The degradation is caused by the nitric acid and sodium hydroxide used to regenerate the resin.[10,11]

The results of the above studies were used to estimate the resin usage and the number of waste containers needed to store the waste resin for the CS-100 system. It was assumed for the purpose of the comparison that the CS-100 columns would be regenerated every 2000 bed volumes and that the resin would be replaced every ten regenerations to preserve the

resin capacity and to avoid excessive amounts of ion-exchange eluate LLLW. The resin would need replacing ten times per year, generating close to 14.2 m^3 (500 ft^3) of resin waste. It also was estimated that four 3.4-m^3 (120-ft^3) high-integrity containers (HICs) would be needed to dispose of this resin.

An estimation of LLLW generation was made for the CS-100 system based on SPIX operating procedures and on the expected operational improvements of the evaporator system that should result from adding the extra evaporator condensate tank. To regenerate the CS-100 resin, 6434 L (1700 gal) of 0.5 N nitric acid would be used. The resin would then be converted to the sodium form by flushing with 20 bed volumes of 0.1 M sodium hydroxide, which is recycled to the plant feed via the plant sump. For every three evaporator runs, which total 19,300 L (5100 gal) of eluate, an estimated 1060 L (280 gal) of LLLW concentrate will be generated. If 110 regenerations are performed per year, then 3236 L (855 gal) of LLLW concentrate will be produced per month.

The chemical requirements for softening, coagulation, resin regeneration, and pH adjustment were calculated rather than using SPIX plant records, which were not readily available. The usage of sodium hydroxide was calculated from the stoichiometric requirements for precipitating average amounts of hardness from the process waste stream added to the amount used in the 0.1 M sodium hydroxide used to regenerate the resin each year. The nitric acid requirement was calculated based on the expected yearly volume of 0.5 M nitric acid to be used for column regenerations. The amount of sulfuric acid used to neutralize the process waste prior to discharge was calculated based on the pH of the ion-exchange effluent. The current dose rates of polymer and ferric sulfate coagulants in the existing softener were used as a basis for calculating the yearly requirements of these materials.

3.5 HCR-S/ZEOLITE FLOW SHEET

Like the CS-100 system, this upgrade would also require installation of the equipment listed in Sect. 3.3. The existing HCR-S ion-exchange system would remain unchanged for this upgrade; however, a pH adjustment station would be added ahead of the columns to lower the pH from 11.5 to 8. The temporary zeolite column and sand filter currently installed ahead of the softener would be removed, and a new zeolite system composed of three

columns would be constructed downstream of Clear Well L5 (Fig. 7). The entire flow sheet for the HCR-S/zeolite system is shown in Fig. 8.

3.5.1 pH Adjustment

An additional pH adjustment system will be added to reduce LLLW generated from premature ion-exchange regenerations. During current operation, the pressure drop in the existing HCR-S ion-exchange columns increases during processing and sometimes necessitates premature regeneration to eliminate the plugging deposits. The plugging is caused by post-precipitation of calcium and magnesium from the softener effluent at a pH of 11.5. A pH adjustment station, added upstream of the ion-exchange columns to lower the pH, will stop the precipitation reaction and eliminate the plugging problem.

3.5.2 New Zeolite System

In the existing PWTP system, the HCR-S ion-exchange resin removes ^{90}Sr and a temporary zeolite column is used to remove ^{137}Cs when ^{137}Cs feed concentrations are unusually high. Because the discharge limit for ^{137}Cs will be reduced by DOE Order 5400.5, the ^{137}Cs removal capacity at PWTP must be increased. For this flow sheet, the temporary zeolite column will be replaced with a permanent system of three columns in parallel to triple the current ^{137}Cs capacity. The proposed columns will be installed in a permanent concrete diked area and piped into the system downstream of Clear Well L5. Column feed pumps will be necessary to deliver up to 100 gal/min maximum to each of the three columns.

Support systems will be necessary for loading and dewatering the zeolite columns. Loading the columns will involve the use of an overhead hoist for loading bulk quantities of zeolite into the top of the column, followed by filling and flushing the column with water to remove zeolite fines. This operation may be performed in a separate building with a storage area, dust ventilation, and climate control.

ORNL DWG 90-14333

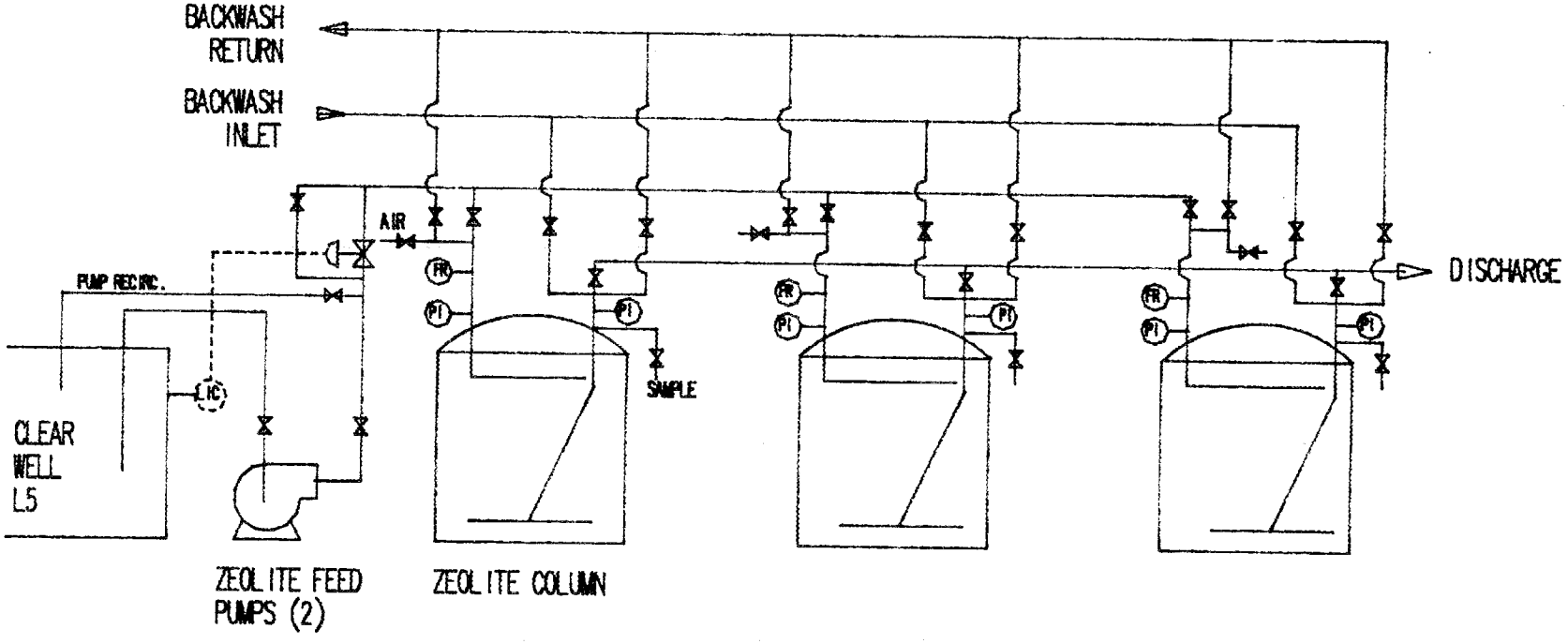

Fig. 7. Proposed zeolite system for the HCR-S/zeolite upgrade.

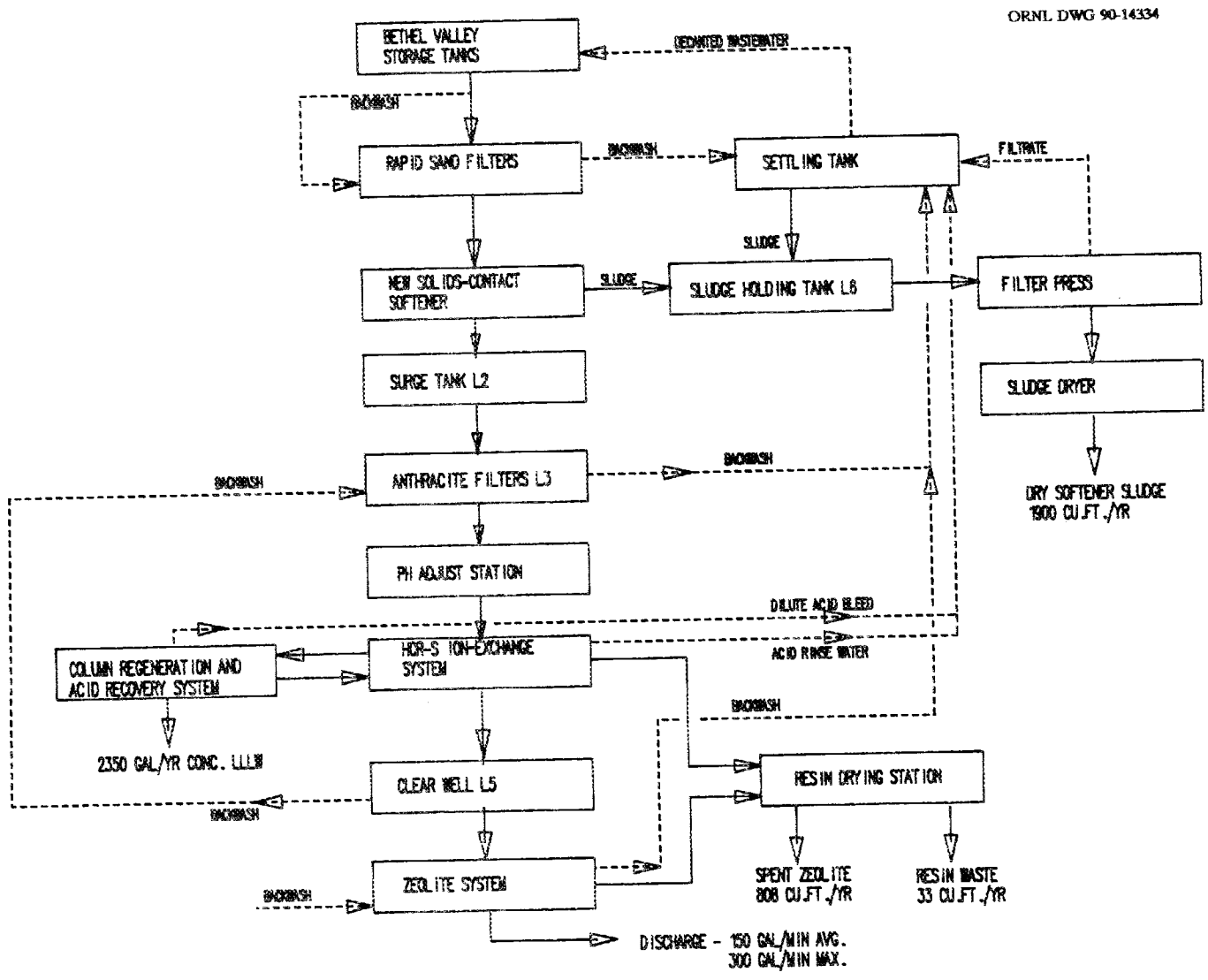

Fig. 8. Initial HRC-S/zeolite flow sheet.

3.5.3 Operating the HCR-S/Zeolite System

The advantages of the HCR-S/zeolite upgrade are the reduced frequency of ion-exchange column regenerations and the corresponding reduction in LLLW produced at the plant. Operational procedures for the HCR-S/zeolite upgrade would not be significantly different from current operations, although the zeolite system and ion-exchange pH adjustment station would require additional monitoring and maintaining. The amount of solid low-level waste generated is increased because of the production of spent zeolite.

The zeolite system will require several additional infrequent operations that will have a small impact on operator work load. The columns will need to be filled with fresh zeolite and flushed to remove zeolite fines prior to placement on-line. Once a column is spent, it must be removed from the system and taken to a location where dewatering of the zeolite can be performed. These two operations should take place no more than once every 2 months. Monitoring and backwashing the columns are a familiar duty at the plant and should not significantly impose on other operations. With the reduced frequency of HCR-S resin regeneration, the operator should have more freedom to handle zeolite operations.

3.5.4 Waste Generation and Chemical Requirements

The amount of LLLW generated at the plant for the HCR-S/zeolite process was estimated assuming significant reductions in volume resulting from addition of the new softener and the evaporator condensate storage tank. Plant experience indicates that the run time of an HCR-S resin column is directly related to the level of hardness in the column feed. When the resin is loaded with calcium and magnesium, which compete directly with ^{90}Sr, the column is removed from service for regeneration. The replacement of the existing softener is expected to reduce the level of hardness in the ion-exchange column feed by one-half, which will double the capacity of the resin for ^{90}Sr removal. As a result, the frequency of ion-exchange column regenerations will be reduced by one-half as will the volume of LLLW eluate. In 1988, an average of one regeneration per week was performed giving an average column throughput of 3400 bed volumes. With the upgrade, the capacity of the ion-exchange columns should be increased to 6800 bed volumes before regeneration is necessary. The addition of the condensate holding tank in the evaporator system will eliminate dilute ion-

exchange eluate transfer to the LLLW system. The amount of LLLW waste generated for every three eluate batches processed by the PWTP evaporator should be 1060 L (280 gal) of eluate concentrate only. At an average of slightly over two regenerations per month, the average volume of LLLW concentrate generated per month should be 734 L (194 gal).

The amount of organic ion-exchange resin waste generated using this system is relatively small. The HCR-S resin is very stable and not significantly degraded during acid regeneration. For the purpose of this study, however, it is assumed that the resin will be replaced every 30 loading/regeneration cycles. The replacement will generate an average of 0.94 m^3 (33 ft^3) of resin waste per year.

The chemical requirements for the HCR-S/zeolite system were calculated based on expected operating parameters. Sodium hydroxide usage was calculated based on pH requirement and stoichiometric requirement for removal of average amounts of hardness in the softener. Usage of nitric acid was based on an estimate of the amount of 2.7 N nitric acid presently used to regenerate resin. The amount of sulfuric acid needed to neutralize the softener effluent was also calculated. The yearly quantities of polymer and ferric sulfate coagulants were calculated based on current dose rates in the softener.

The quantity of spent zeolite and the number of disposable columns generated per year were calculated based on the expected capacity of zeolite for ^{137}Cs. The operation of the zeolite system will involve feeding process waste from Clear Well L5 downstream of the ion-exchange columns to one or more of three zeolite columns installed in parallel, each with a capacity of 6.3-L/s (100-gal/min) flow. The columns should be capable of treating at least 15,000 bed volumes (14.6M gal) for removal of ^{137}Cs.[2] It is estimated that 23 m^3/year (808 ft^3/year) of spent zeolite will be generated, which results in the disposal of six columns per year.

3.6 COST ESTIMATE

The initial order-of-magnitude cost study for the upgrade was performed with emphasis on comparing the two systems rather than on the actual dollar amounts necessary for each upgrade. The information in Sects. 3.3 through 3.5 was used to determine operating and disposal costs for the two systems. The capital investment for the two systems was determined using a standard estimating procedure and equipment costs acquired from several industry

sources.[11,12,13] The details and results of the initial cost study are described in the following sections.

3.6.1 Cost-estimating Methods and Results

The procedure for estimating the total fixed-capital investment for the flow sheets involved determining equipment costs and applying ratio factors to the total equipment cost to estimate other costs such as installation, electrical, piping, engineering, supervision, etc.[12] The equipment costs for both upgrade options were determined using several standard sources[12,13,14] along with plant cost indices[15] to scale up to 1988 costs. Recommended ratio factors[12] of 47% for installation, 66% for piping, and 11% for electrical were increased to 75%, 106%, and 15% respectively to allow for increased cost of performing work on contaminated systems. The factor for instrumentation[12] was increased from 18% to 20% and $8000 was added for flow indicators and a recorder for the existing ion-exchange columns. The engineering and supervision factor[12] of 33% and the contingency factor of 10% (of total indirect and direct costs) were increased to 50% and 15% respectively to allow for increased cost of approval and documentation requirements.

Operating and disposal costs were determined from the information discussed in Sects. 3.4 and 3.5 and based on the following additional considerations:

1. The amount of softener sludge generated per year will be the same as what is currently generated, or about 110 m^3 (3900 ft^3) for both upgrade options; however, the addition of the Sludge Volume Reduction Facility, which is expected to remove excess water from the sludge, will reduce the volume by 50%.
2. The cost of solid low-level waste disposal is $1412/$m^3$ ($40/$ft^3$), and the cost of liquid waste disposal in the LLLW system is $13.2/L ($50/gal), based on information provided by the Hazardous/Radioactive Waste Operations group of the Environment and Health Protection Division.[16]
3. Labor, analytical, and utility costs are assumed to be the same for both upgrade options.
4. Future costs are calculated based on a 5% annual inflation rate.

Table 1 shows the comparative costs of the two flow sheet options. The study shows that though the capital investment for the HCR-S/zeolite upgrade is $439K higher than the investment for the CS-100 upgrade, the extra cost of operating and disposal for the CS-100 system causes it to be far more expensive in terms of the total 10-year costs. In fact, the additional capital for the HCR-S/zeolite upgrade could be recovered in less than 2 years from the savings in total yearly operating costs. However, the cost of the HCR-S/zeolite system is beyond the $1.2 M limit for GPP funding.

3.6.2 Feasibility of Eluate Fractionation and Solidification Systems

The feasibility of additional PWTP evaporator system upgrades discussed in Sect. 3.2 was evaluated to determine the potential cost benefits. The advantages of eluate fractionation and solidification include the cost savings of recovering a greater percentage of the nitric acid, eliminating the cost of PWTP LLLW production, and virtually eliminating nitrate discharge from the plant.

While the reduction in nitric acid costs is low, the elimination of LLLW results in significant cost impact. The savings expected by recovery of the nitric acid will be about $4K/year in fresh nitric acid purchases. The cost savings expected by eliminating LLLW generation are based on Table 1 current generation of 17,800 L (4700 gal) of evaporator waste per year and an LLLW disposal cost of $13.2/L ($50/gal).[8] If the technical problems associated with chromium stabilization in the solidified eluate can be solved, it will be possible to eliminate LLLW disposal costs of $230K/year.

Processing and disposal costs must be evaluated to estimate the actual cost savings expected by solidifying the waste. The costs associated with solidification processing were difficult to estimate, however, because of the wide range of available cost information. An approximate cost of solidification processing of $4746/m^3 ($138/ft^3) was determined from the solidification of MVST LLLW in concrete.[6] This cost ($870,000) is based solely on costs of solidification services for 17,800 L (47,000 gal) of waste. The project took place in December 1988 and January 1989. This solidification project, however, was not considered a good example for estimating the costs because of the experimental nature of the work. The U.S. Nuclear Regulatory Commission (NRC) cost-estimating guidelines,[17] provided the information that was used to calculate an estimated cost of $459/m^3 ($13/ft^3). The NRC

Table 1. Initial cost evaluation: HCR-S/zeolite vs CS-100 systems

Capital costs

Direct costs:

HCR-S/zeolite

Item	Cost ($M)
Softener	$90,000
Feed pumps (2)	6,400
Sand filters (2)	20,000
Settler w/pumps	32,600
Condensate tank	25,000
Resin drying station	16,000
Booster pump	2,500
Zeolite loading sta.	31,300
Zeolite columns (3)	43,500
pH adjustment tank	3,900
Acid metering pump	28,800
	$274,000

CS-100

Item	Cost ($M)
Softener	$90,000
Feed pumps (2)	6,400
Sand filters (2)	20,000
Settler w/pumps	32,600
Condensate tank	25,000
Resin drying sta.	16,000
	$190,000

	% of purchase costs	HCR-S/ zeolite	CS-100
Installation	75,000	$206,000	$143,000
Instruments & controls	20 + $8,000[a]	63,000	46,000
Piping	106,000	291,000	201,000
Electrical	15,000	41,000	29,000
Buildings & yard	35,000	96,000	66,000
		$697,000	$485,000
Total direct costs		**$971,000**	**$675,000**

Indirect costs:

	% of purchase costs	HCR-S/ zeolite	CS-100
Engineering & supv.	50,000	$137,000	$95,000
Construction expenses	34,000	93,000	65,000
Total indirect costs		**$230,000**	**$160,000**
Total direct and indirect costs		**$1,201,000**	**$835,000**
Contractor's fee (5% D&I)		60,000	42,000
Contingency (15% D&I)		180,000	125,000
Total fixed-capital investment		**$1,441,000**	**$1,002,000**

Table 1. (continued)

Operating costs

	HCR-S/Zeolite Quantity/year	HCR-S/Zeolite $M/year	CS-100 Quantity/year	CS-100 $M/year
Labor	1 operator + 0.5 supv.	$400,000	1 operator + 0.5 supv.	$400,000
Chemicals:				
NaOH	24,800 gal	24,800	44,550 gal	44,600
HNO_3	4,180 gal	2,600	6,330 gal	3,900
H_2SO_4	6,780 gal	3,500	17,040 gal	8,900
Ferrifloc	1,400 gal	1,300	1,400 gal	1,300
Polymer	40 gal	500	40 gal	500
IX Material:				
HCR-S	33 ft^3	2,000	---	---
CS-100	---	---	495 ft^3	104,000
Zeolite	808 ft^3	42,800	---	---
Utilities		$50,000		$50,000
Analytical		$200,000		$200,000
Total operating costs/ year		**$728,000**		**$813,000**

Disposal costs

	Rate	HCR-S/zeolite Quantity/year	HCR-S/zeolite $M/year	CS-100 Quantity/year	CS-100 $M/year
LLLW					
Solid waste	$50/gal	2,350 gal	$118,000	10,270 gal	$514,000
Softener SL (dried)	$40/$ft^3$	1,900 ft^3	76,000	1,900 ft^3	76,000
IX resin	$40/$ft^3$	33 ft^3	1,300	495 ft^3	20,000
Zeolite	$40/$ft^3$	808 ft^3	32,000	-	-
Subtotal	$40/$ft^3$	2,741 ft^3	$109,300	2,395 ft^3	$ 96,000
Containers:					
Zeolite	$14,500/ea.	6 ea.	$87,000	-	-
HICs	$ 7,400/ea.	3 ea.	2,000	4 ea	30,000
Subtotal			$89,000		$30,000
Total disposal costs/year			$316,000		$640,000

Table 1. (continued)

Cost summary

	HCR-S/Zeolite	CS-100
Capital costs	$1,441,000	$1,002,000
Yearly costs:		
Operating costs	$728,000	$813,000
Disposal costs	317,000	640,000
Total yearly costs	**$1,045,000**	**$1,453,000**

Future costs

	HCR-S/Zeolite	CS-100
10-year operating & disposal costs (5% inflation rate)	$13,558,000	$18,852,000
10-year future value of capital (5% inflation rate)	$2,376,000	$1,652,000
Total 10 year cost	**$15,900,000**	**$20,500,000**

[a]$8,000 added for IX column flow instruments.

guidelines produced a low estimate because of the large size of the processing plants (nuclear power plant scale) that were evaluated and because depreciation costs were not taken into account. To obtain a rough estimate of the processing cost for PWTP, the NRC estimate was doubled to account for a smaller-scale plant and the additional depreciation costs, giving an estimate of $918/m^3 ($26/ft^3). The disposal cost of the solidified waste product was estimated to be $23K/year,[8] which when added to the processing costs gives a total cost of $54K/year. A net savings of $176K/year would result compared to the existing processing procedures. This estimate does not include the associated costs of additional research, development, and engineering.

An important consideration for feasibility of this system is the period of time the equipment will be used. The time required for the additional experimental studies, cost estimating, engineering design, and construction would be at least 3 years, which leaves only about 5 years of operation before the equipment would be placed out of service due to startup of the new PWTP. It is doubtful that the research, engineering, and capital costs could be recovered in this short time period.

The initial cost estimate discussed in the previous section indicates that the limit for GPP funding will be exceeded without the costs of these additional upgrades. For this reason and because of the short equipment life discussed previously, additional fractionation and solidification of the PWTP evaporator bottoms were not considered for the interim upgrade.

4. SECOND PHASE FLOW SHEET EVALUATION

Because the GPP funding limitation, an amended, second phase cost study was performed to reduce costs to within the GPP limit and to stay within the GPP funding time frame. The initial proposed upgrades were reviewed to determine equipment that could be eliminated with the least impact on plant operation and waste minimization. The final upgrade option was chosen after revising both upgrade flow sheets to reflect equipment modifications and after reevaluating system costs and operations.

4.1 UPGRADE EQUIPMENT MODIFICATION

After discussions with Waste Operations personnel, BVST were determined to be adequately equipped with mixing capability to keep solids from settling and accumulating in the tanks. The settler tank was therefore removed from the upgrade plans. The sand filters were also removed from the flow sheets because the likelihood of obstructing the rakes of the softener is lessened with the use of BVST, where grass and larger materials are less likely to enter the system than with the existing EB 3524. Without the sand filters, which add pressure drop to the system, the BVST feed pumps will be adequately sized to provide the higher flow rates anticipated for the future. New PWTP feed pumps were therefore removed from the plans.

A surplus tank is available that could be used for holding condensate in the PWTP evaporator system. The cost of this tank was deducted from the purchased-equipment costs. However, its cost was included when using the ratio factors for estimating other direct costs for the tank such as installation, etc.

In the original flow sheets, funds were allocated for resin-drying equipment. Dewatering resins and other materials that require transportation and disposal are common throughout ORNL; therefore, a separate GPP or service contract should be implemented to address their disposal. The funds for a drying facility, therefore, were deducted from the purchased-equipment costs.

4.2 FINAL COST ESTIMATE

Table 2 shows the results of the second and final cost estimate. The final flow sheets for the two systems reflecting the equipment changes are shown in Figs. 9 and 10. The comparative results are similar to those obtained in the first estimate. The capital cost of the HCR-S/zeolite system is $456K more than the cost for the CS-100 system; however, the total 8-year cost of the CS-100 system exceeds the HCR-S/zeolite system by $3.4 M.

The original 10-year costs were reduced to 8-year costs to more accurately reflect the estimated time frame for operation of the interim upgraded plant. The interim upgrade is a 1990 GPP scheduled for construction completion in early 1991, and the new plant should be functional by 1999 if it is a 1991 line-item project.

Table 2. Final cost evaluation: HCR-S/zeolite vs CS-100 systems

Capital costs

Direct costs:

HCR-S/zeolite		CS-100	
Item	Cost ($M)	Item	Cost ($M)
Softener	$90,000	Softener	$90,000
Condensate tank	(25,000[a])	Condensate tank	(25,000[a])
Zeolite feed pumps (2)	5,000	Total	90,000
Zeolite loading sta.	31,300		[$115,000]
Zeolite columns (3)	43,500		
pH adjustment tank	3,900		
Acid metering pump	2,800		
Total	**$177,000 [202,000]**		

	% of purchase costs	HCR-S/ zeolite	CS-100
Installation	75,000	$152,000	$86,000
Instruments & controls	20 + $8,000[b]	48,000	31,000
Piping	106,000	214,000	122,000
Electrical	15,000	30,000	17,000
Buildings & yard	35,000	71,000	40,000
Total		**$515,000**	**$296,000**
Total direct costs		**$692,000**	**$386,000**

Indirect costs:

	% of purchase costs	HCR-S/ zeolite	CS-100
Engineering & supv.	50,000	$104,000	$58,000
Construction expenses	34,000	69,000	39,000
Total indirect costs		**$173,000**	**$97,000**
Total direct and indirect costs		**$865,000**	**$483,000**
Contractor's fee (5% D&I)		43,000	24,000
Contingency (15% D&I)		128,000	73,000
Total fixed-capital investment		**$1,036,000**	**$580,000**

Table 2. (continued)

Operating costs

	HCR-S/zeolite Quantity/year	HCR-S/zeolite $M/year	CS-100 Quantity/year	CS-100 $M/year
Labor	1 operator + 0.5 supv.	$400,000	1 operator + 0.5 supv.	$400,000
Chemicals:				
NaOH	24,800 gal	24,800	44,550 gal	44,600
HNO_3	4,180 gal	2,600	6,330 gal	3,900
H_2SO_4	6,780 gal	3,500	17,040 gal	8,900
Ferrifloc	1,400 gal	1,300	1,400 gal	1,300
Polymer	40 gal	500	40 gal	500
IX material:				
HCR-S	33 ft^3	2,000	---	---
CS-100	---	---	495 ft^3	104,000
Zeolite	808 ft^3	42,800	---	---
Utilities		$50,000		$50,000
Analytical		$200,000		$200,000
Total operating costs/ year		**$728,000**		**$813,000**

Disposal costs

	Rate	HCR-S/zeolite Quantity/year	HCR-S/zeolite $M/year	CS-100 Quantity/year	CS-100 $M/year
LLLW					
Solid waste	$50/gal	2,350 gal	$118,000	10,270 gal	$514,000
Softener SL (dried)	$40/$ft^3$	1,900 ft^3	76,000	1,900 ft^3	76,000
IX Resin	$40/$ft^3$	33 ft^3	1,300	495 ft^3	20,000
Zeolite	$40/$ft^3$	808 ft^3	32,000	-	-
Subtotal	$40/$ft^3$	2,741 ft^3	$109,300	2,395 ft^3	$ 96,000
Containers:					
Zeolite	$14,500/ea.	6 ea.	$87,000	-	-
HICs	$ 7,400/ea.	3 ea.	2,000	4 ea	30,000
Subtotal			$89,000		$30,000
Total disposal costs/year			**$316,000**		**$640,000**

Table 2. (continued)

Cost summary

	HCR-S/zeolite	CS-100
Capital costs	$1,036,000	$580,000
Yearly costs:		
Operating costs/year	$728,000	$813,000
Disposal costs/year	317,000	640,000
Total yearly costs	**$1,045,000**	**$1,453,000**

Future costs

	HCR-S/zeolite	CS-100
8-year operating & disposal Costs (5% inflation rate)	$10,279,000	$14,292,000
8-year future value of capital (5% inflation rate)	$1,546,000	$865,000
Total 8-year cost	**$11,800,000**	**$15,200,000**

[a] This item is not included in total purchase costs, however it is added in to estimate the installed costs.

[b] 8K added for IX column flow instruments.

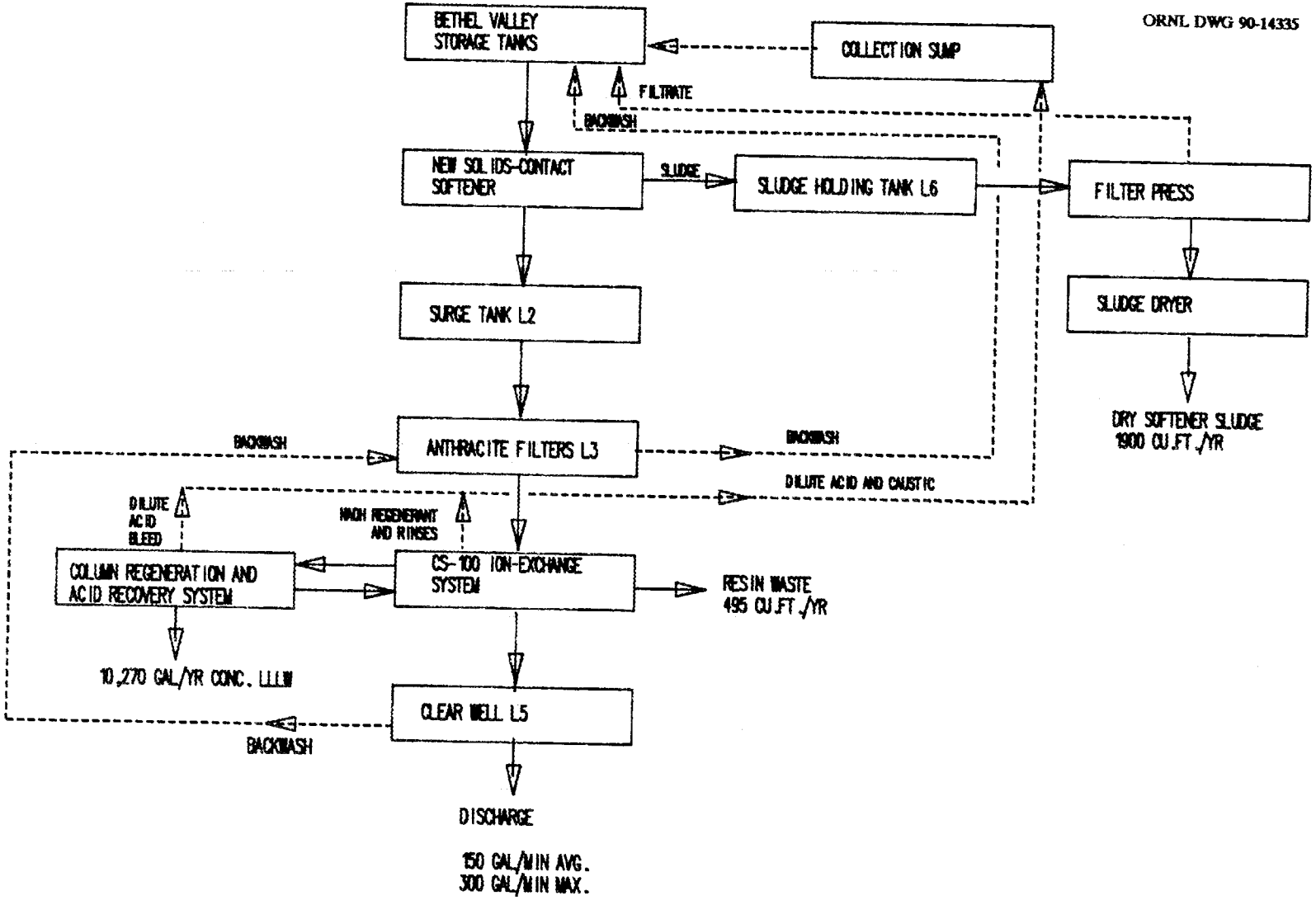

Fig. 9. Final CS-100 flow sheet.

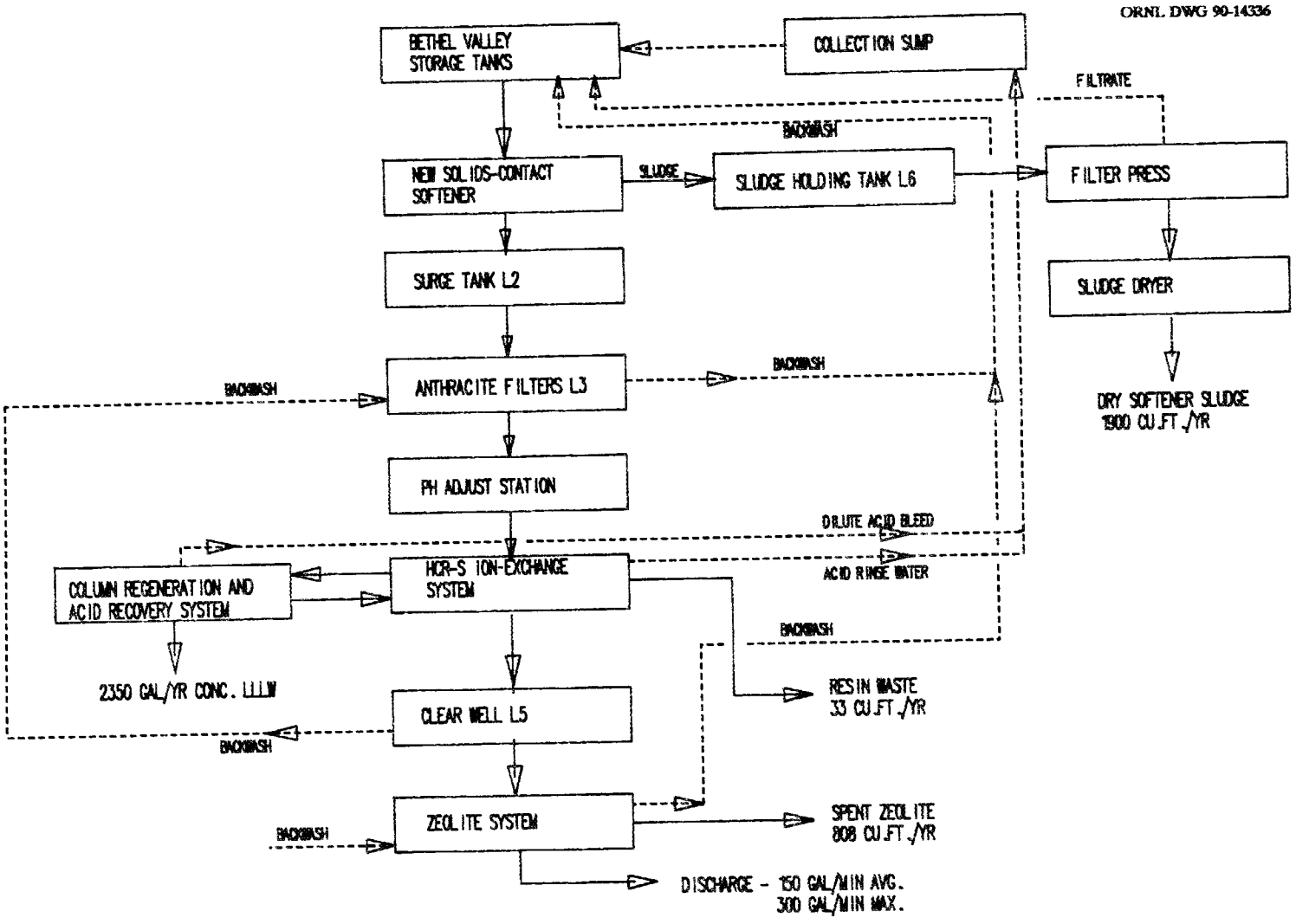

Fig. 10. Final HCR-S/zeolite flow sheet.

The difference in the disposal costs is the key factor in the comparison. The cost of disposing of the much larger amounts of LLLW produced in the CS-100 system result in a $324K/year difference between the two options. The second estimate also indicates that the HCR-S/zeolite option can be implemented for $1.036 M, which is less than the upper limit for GPP funding.

4.3 FLOW SHEET SELECTION CONCLUSIONS

The benefits of the CS-100 upgrade option include the low capital expense and the relative ease of replacing the resin in the existing ion-exchange columns with the CS-100 material. Long-term costs, operating costs, and disposal costs, however, favor the HCR-S/zeolite system. The decrease in frequency of ion-exchange column regenerations and evaporator operations will make coordination of tasks and maintenance less difficult with the HCR-S/zeolite system than it would be with the CS-100 system. Based on both operating and cost evaluations, the HCR-S/zeolite system was recommended for the PWTP interim upgrade.

5. SUMMARY OF FINAL UPGRADE FLOW SHEET

Compared with the current PWTP operation, the proposed HCRS/zeolite interim upgrade (Fig. 9) will decrease disposal costs, increase process wastewater feed capacity, and increase ^{137}Cs removal capacity significantly. A new softener, a pH adjustment station, a higher-capacity zeolite system, and an additional evaporator condensate holding tank will be included in the upgrade. The maximum-feed-flow capacity of the plant will increase from the current 10 L/s (160 gal/min) to 19 L/s (300 gal/min). The new zeolite system will triple the plant's capacity for removing ^{137}Cs and will reduce the discharge levels to well below the new limits set by DOE Order 5400.5. Addition of the new softener will decrease the amount of ion-exchange eluate by 50%, and the added condensate holding tank will eliminate the transfer of unprocessed eluate to the LLLW system for a total 70% reduction in PWTP LLLW production. The amount of solid waste generation will increase by 30% due to the

generation of spent zeolite waste. As a whole, the cost of waste disposal at the plant will decrease by more than 50%.

Using the operating and disposal costs that were the basis for this study, the capital costs for the HCR-S/zeolite upgrade will be recovered in 5 years or less of operation. Although the addition of the zeolite system will make the process slightly more complex, the revised process should be less sensitive to upsets and should operate with a greater degree of reliability than the current system.

6. REFERENCES

1. S. M. Robinson and J. M. Begovich, Treatment Studies at the Process Waste Treatment Plant at Oak Ridge National Laboratory, ORNL/TM-10352, to be published at Martin Marietta Energy Systems, Inc., Oak Ridge National Laboratory, February 1990.

2. S. M. Robinson, Initial Evaluation of Alternative Flowsheets for Upgrade of the Process Waste Treatment Plant, ORNL/TM-10576, to be published at Martin Marietta Energy Systems, Inc., Oak Ridge National Laboratory.

3. S. M. Robinson and J. R. Parrott Jr., Pilot Scale Demonstration of Process Wastewater Decontamination Using Chabazite Zeolites, ORNL/TM-10836, to be published at Martin Marietta Energy Systems, Inc., Oak Ridge National Laboratory.

4. S. M. Robinson, J. R. Parrott, and J. F. Villiers-Fisher, Continued Development of Decontamination Processes Using Chabazite Zeolites, Letter Report, September 1988.

5. R. E. Brooksbank et al., Low-Radioactivity-Level Waste Treatment, Part II. Pilot Plant Demonstration of the Removal of Activity From Low-Level Process Wastes by a Scavenging-Precipitation Ion-Exchange Process, ORNL-3349, Union Carbide Corporation, Oak Ridge National Laboratory, May 13, 1963.

6. T. E. Myrick et al., The Emergency Avoidance Solidification Campaign of Liquid Low-Level Waste at Oak Ridge National Laboratory, Martin Marietta Energy Systems, Inc., Oak Ridge National Laboratory, March 1989.

7. T. J. Abraham, Personal Communication, Martin Marietta Energy Systems, Inc., Oak Ridge National Laboratory, April 1989.

8. S. M. Robinson, J. R. Parrott, and J. F. Villiers-Fisher, Study of the PWTP Evaporator System, Letter Report, September 1988.

9. R. R. Holcomb, Low-Radioactivity-Level Waste Treatment, Part I. Laboratory Development of a Scavenging-Precipitation Ion-Exchange Process for Decontamination of Process Water Wastes, ORNL-3322, Union Carbide Corporation, Oak Ridge National Laboratory, July 10, 1963.

10. J. M. Chilton, An Evaluation of the Low-Level Waste Treatment Plant at Oak Ridge National Laboratory, and Suggested Changes in the Design and Operation, ORNL-5618, Union Carbide Corporation, Oak Ridge National Laboratory, March 1980.

11. J. M. Chilton, The Use of a Phenolic-Carboxylic Acid Cation Resin in the Treatment of Low-Level Liquid Waste at Oak Ridge National Laboratory, ORNL/TM-7524, Union Carbide Corporation, Oak Ridge National Laboratory, September 1981.

12. M. S. Peters and K. D. Timmerhaus, Plant Design and Economics for Chemical Engineers, Chapter 4, "Cost Estimation"; Chapter 13, "Materials Transfer, Handling and Treatment Equipment Design and Costs"; and Chapter 14, "Heat Transfer Equipment Design and Costs," McGraw-Hill Book Co., New York, 1968.

13. Richardson Engineering Services, Inc., Process Plant Construction Estimating Standards, Vols 3 and 4, 1982-1983 edition.

14. Union Carbide Corporation, Investment Estimating Manual, February 1973.

15. J. S. Pippin, DOE-ORO Escalation Study, Oak Ridge, TN, October 12, 1988.

16. T. F. Scanlan, Personal Communication, Martin Marietta Energy Systems, Inc., Oak Ridge National Laboratory, March 1989.

17. R. Clark et al., Generic Cost Estimates for the Disposal of Radioactive Wastes, Science and Engineering Associates, Inc., SC&A, Inc., prepared for the USNRC, NUREG/CR-4555, SEA 87-288-04-A:1, rev. 1, 1987.

INTERNAL DISTRIBUTION

1. W. J. Armento
2. L. D. Bates
3. J. M. Begovich
4. J. B. Berry
5. C. H. Brown, Jr.
6. D. O. Campbell
7. E. D. Collins
8. A. G. Croff
9. S. M. DePaoli
10. T. L. Donaldson
11. C. P. East
12. B. M. Eisenhower
13. S. B. Garland
14. R. K. Genung
15. R. W. Glass
16. R. Hall
17. J. R. Hightower
18. E. K. Johnson
19. C. M. Kendrick
20. J. J. Maddox
21. R. C. Mason
22. C. P. McGinnis
23. L. E. McNeese
24. M. E. Mitchell
25. T. E. Myrick
26. J. R. Parrott
27. B. D. Patton
28. S. A. Richardson
29. S. M. Robinson
30. S. T. Rudell
31. T. F. Scanlan
32. C. B. Scott
33. C. D. Scott
34. B. R. Reed
35. M. G. Stewart
36. P. A. Taylor
37. A. B. Walker
38. A. W. Wilson
39. J. H. Wilson
40. Central Research Library
41. ORNL—Y-12 Tech. Library Document Reference Section
42. Laboratory Records
43. Laboratory Records, ORNL RC
44. ORNL Patent Section

EXTERNAL DISTRIBUTION

45. Director, Industrial Environmental Research Laboratory, U. S. Environmental Protection Agency, Cincinnati, OH 45268
46. Director, U. S. Environmental Protection Agency, Research Triangle Park, NC 27711
47. Office of Assistant Manager, Energy Research and Development, DOE-ORO, P. O. Box 2001, Oak Ridge, TN 37831

48-49. Office of Scientific and Technical Information, P. O. Box 62, Oak Ridge, TN 37831

50. Russell M. Propst, Duke Power Wachovia, P. O. Box 33189, Charlotte, NC 28242
51. Dennis Fennally, Union Carbide, 308 Harper Drive, Morristown, NJ 08057
52. Neal J. Numark, ERR International, 3211 Germantown Road, Fairfax, VA 22030
53. John G. Yates, USDOE, ER-42, Room 3F-091, Forrestal Bldg., 1000 Independence Avenue, S.W., Washington, DC. 20585
54. Ray Wilson, Steelhead Specialty Minerals, 1219 Washington Street, Suite 306, Spokane, WA 99201
55. W. N. Lingle, DOE-ORO, P.O. Box 2001, Oak Ridge, TN 37831-8621
56. Louis Valazquez, DOE-ORO, P.O. Box 2001, Oak Ridge, TN 37831-8621
57. Doug Underwood, DOE-ORO, P. O. Box 2001, Oak Ridge, TN 37831-8621