MARTIN MARIETTA ENERGY SYSTEMS LIBRARIES

3 4456 0351516 8

ornl

ORNL/TM-11848

OAK RIDGE NATIONAL LABORATORY

MARTIN MARIETTA

GUIDANCE MANUAL FOR CONDUCTING TECHNOLOGY DEMONSTRATION ACTIVITIES

Robert L. Jolley
Michael I. Morris
Suman P. N. Singh

OAK RIDGE NATIONAL LABORATORY
CENTRAL RESEARCH LIBRARY
CIRCULATION SECTION
4500N ROOM 175
LIBRARY LOAN COPY
DO NOT TRANSFER TO ANOTHER PERSON
If you wish someone else to see this report, send in name with report and the library will arrange a loan.

December 1991

WASTE MANAGEMENT TECHNOLOGY CENTER

MANAGED BY
MARTIN MARIETTA ENERGY SYSTEMS, INC.
FOR THE UNITED STATES
DEPARTMENT OF ENERGY

This report has been reproduced directly from the best available copy.

Available to DOE and DOE contractors from the Office of Scientific and Technical Information, P.O. Box 62, Oak Ridge, TN 37831; prices available from (615) 576-8401, FTS 626-8401.

Available to the public from the National Technical Information Service, U.S. Department of Commerce, 5285 Port Royal Rd., Springfield, VA 22161.

This report was prepared as an account of work sponsored by an agency of the United States Government. Neither the United States Government nor any agency thereof, nor any of their employees, makes any warranty, express or implied, or assumes any legal liability or responsibility for the accuracy, completeness, or usefulness of any information, apparatus, product, or process disclosed, or represents that its use would not infringe privately owned rights. Reference herein to any specific commercial product, process, or service by trade name, trademark, manufacturer, or otherwise, does not necessarily constitute or imply its endorsement, recommendation, or favoring by the United States Government or any agency thereof. The views and opinions of authors expressed herein do not necessarily state or reflect those of the United States Government or any agency thereof.

ORNL/TM-11848

Chemical Technology Division

GUIDANCE MANUAL FOR CONDUCTING TECHNOLOGY DEMONSTRATION ACTIVITIES

Robert L. Jolley
Michael I. Morris
Suman P. N. Singh

Date Published - December 1991

Prepared for
Office of Environmental Restoration and Waste Management
(EW 20 10 30 1)
(EW 40 50 20 0)

Prepared by the
OAK RIDGE NATIONAL LABORATORY
Oak Ridge, Tennessee 37831
managed by
MARTIN MARIETTA ENERGY SYSTEMS, INC.
for the
U.S. DEPARTMENT OF ENERGY
under contract DE-AC05-84OR21400

MARTIN MARIETTA ENERGY SYSTEMS LIBRARIES
3 4456 0351516 8

CONTENTS

FOREWORD ix

PREFACE AND ACKNOWLEDGMENTS xi

LIST OF ACRONYMS xiii

EXECUTIVE SUMMARY 1

1. INTRODUCTION 5
   - 1.1 PURPOSE OF MANUAL 5
   - 1.2 REDEMONSTRATION ACTIVITIES 5
   - 1.3 DEMONSTRATION ACTIVITIES 6
   - 1.4 LOGIC FLOW DIAGRAM 7
   - 1.5 SPECIAL CONSIDERATIONS 7

2. REDEMONSTRATION-PHASE ACTIVITIES 19
   - 2.1 IDENTIFY PROBLEM AREA OR NEED (DOE AND/OR ENERGY SYSTEMS STAFF RESPONSIBLE) 19
   - 2.2 SELECT A PRINCIPAL INVESTIGATOR (DOE AND/OR ENERGY SYSTEMS STAFF RESPONSIBLE) 19
   - 2.3 DEFINE PRINCIPAL INVESTIGATOR RESPONSIBILITIES 20
   - 2.4 SELECT A REDEMONSTRATION MANAGEMENT TEAM (PI RESPONSIBLE FOR SELECTION WITH APPROPRIATE CONSULTATION) 21
   - 2.5 CHARACTERIZE AND QUANTIFY PROBLEM AREA OR NEED (PI AND REDEMONSTRATION MANAGEMENT TEAM RESPONSIBLE) 22
   - 2.6 IDENTIFY POSSIBLE SOLUTIONS TO PROBLEM AREAS OR NEEDS (PI AND REDEMONSTRATION MANAGEMENT TEAM RESPONSIBLE) 22
   - 2.7 DEVELOP REDEMONSTRATION LABORATORY BENCH-SCALE OR TREATABILITY STUDIES PROPOSAL IF DETERMINED NECESSARY IN SECT. 2.6, ITEM 5 (PI AND REDEMONSTRATION MANAGEMENT TEAM RESPONSIBLE). LABORATORY BENCH-SCALE OR TREATABILITY STUDIES WILL BE INCLUDED IN THE DEMONSTRATION PROPOSAL AS OUTLINED IN SECT. 2.8, ITEM 11 23
   - 2.8 PREPARE DEMONSTRATION PROPOSAL IF DETERMINED NECESSARY IN SECT. 2.6, ITEM 6 (PI AND REDEMONSTRATION MANAGEMENT TEAM OR THE PM, IF SELECTED) 24

2.9 FACILITATE FINANCIAL ACTIONS AFTER FUNDING APPROVAL (PI OR PM, IF SELECTED, RESPONSIBLE) 26

2.10 CONTRACT WITH PRIVATE VENDOR, AS DETERMINED IN SECT. 2.9, ITEM 9 (PI AND REDEMONSTRATION MANAGEMENT TEAM OR PM, IF SELECTED, RESPONSIBLE) 26

3. ORGANIZATION FOR DEMONSTRATION MANAGEMENT 29

3.1 PROJECT MANAGER (SELECTED BY ENERGY SYSTEMS STAFF) 30

3.2 PROJECT MANAGER RESPONSIBILITIES 30

3.3 DEMONSTRATION MANAGEMENT TEAM (GENERALLY SELECTED BY PM WITH INPUT FROM DOE AND ENERGY SYSTEMS STAFF) 31

3.4 DEMONSTRATION MANAGEMENT TEAM RESPONSIBILITIES 32

3.5 DOE AND ENERGY SYSTEMS MANAGEMENT OVERSIGHT TEAM 33

4. MANAGEMENT STEPS LEADING TO DEMONSTRATION APPROVAL 37

4.1 SCHEDULE AND CONDUCT INITIAL ORGANIZATION MEETING (PM AND DMT RESPONSIBLE) 37

4.2 PREPARE PROJECT DESCRIPTION AND OBTAIN APPROVAL (PM AND DMT RESPONSIBLE). SEE APPENDIX C FOR EXAMPLE PROJECT 38

4.3 PREPARE PROJECT PLAN (PM AND DMT RESPONSIBLE) 40

4.4 PREPARE PROJECT DEMONSTRATION COST AND SCHEDULE (PM RESPONSIBLE) 47

4.5 ENSURE COMPLIANCE WITH SITE SECURITY REQUIREMENTS AND COMPLIANCE WITH CLASSIFICATION REQUIREMENTS. (PM AND DMT COORDINATE WITH SITE SECURITY STAFF) 49

4.6 ENSURE COMPLIANCE WITH SITE WASTE MANAGEMENT REQUIREMENTS (PM AND DMT COORDINATE, WITH SITE ENVIRONMENTAL COORDINATOR AS CONSULTANT) 51

4.7 ENSURE DEMONSTRATION REGULATORY COMPLIANCE (PM AND DMT COORDINATE, WITH SITE ENVIRONMENTAL COORDINATOR, SITE ENVIRONMENTAL PROTECTION OFFICERS, AND SITE RCRA COMPLIANCE STAFF AS CONSULTANTS). SEE ALSO SECTS. 4.8 AND 4.9 51

4.8 OBTAIN NECESSARY STATE/EPA RESEARCH, DEVELOPMENT AND DEMONSTRATION PERMITS OR TREATABILITY STUDIES EXCLUSIONS (PM AND DMT COORDINATE, WITH SITE RCRA COMPLIANCE STAFF AND PERMITTING SPECIALISTS AS CONSULTANTS) 52

4.9 ENSURE COMPLIANCE WITH NEPA REQUIREMENT (PM AND DMT RESPONSIBLE FOR COORDINATING WITH SITE NEPA COORDINATOR). THE PREPARATION OF NEPA DOCUMENTATION IS CONSIDERED IN MORE DETAIL IN APPENDIX F 54

4.10 ENSURE MEETING OF SITE ENVIRONMENTAL REQUIREMENTS (PM AND DMT RESPONSIBLE, WITH SITE ENVIRONMENTAL COORDINATOR AS CONSULTANT) 55

4.11 ENSURE SAFE DEMONSTRATION OPERATIONS (PM AND DMT RESPONSIBLE FOR COORDINATION WITH SITE INDUSTRIAL SAFETY STAFF) 56

4.12 ENSURE COMPLIANCE WITH OSHA AND SITE INDUSTRIAL HYGIENE STANDARDS (PM AND DMT RESPONSIBLE, WITH SITE INDUSTRIAL HYGIENE STAFF AS CONSULTANTS) 56

4.13 ENSURE COMPLIANCE WITH HEALTH PHYSICS REQUIREMENTS (PM AND DMT TO COORDINATE WITH SITE HEALTH PHYSICS STAFF) 57

4.14 EVALUATE ES&H STANDARDS OF VENDOR SITES AS NECESSARY (PM AND DMT WITH CWMD AND ENVIRONMENTAL AND SAFETY ACTIVITIES STAFF) 57

4.15 ENSURE COMPLIANCE WITH ENGINEERING POLICIES AND PROCEDURES (PM AND DMT RESPONSIBLE, WITH SITE ENGINEERING STAFF AS CONSULTANTS) 58

4.16 ACCOMPLISH PROCUREMENT ACTIVITIES AS NEEDED (PM AND DMT RESPONSIBLE THROUGH ENERGY SYSTEMS PROCUREMENT/PURCHASING STAFF) 58

4.17 PREPARE AND ENSURE COMPLIANCE WITH DEMONSTRATION QUALITY ASSURANCE PLAN (PM AND DMT RESPONSIBLE, WITH SITE QA STAFF AS CONSULTANTS) 58

4.18 DEVELOP AND MAINTAIN A RECORD AND DOCUMENTATION FILE (PM AND DMT RESPONSIBLE, WITH SITE QA STAFF AS CONSULTANTS) 59

4.19 PERFORM NECESSARY SITE AND/OR WASTE CHARACTERIZATIONS (PM AND DMT RESPONSIBLE, WITH SITE MANAGEMENT, ANALYTICAL, AND STATISTICAL STAFF AS CONSULTANTS) 60

4.20 COORDINATE SITE PREPARATION FOR DEMONSTRATION (PM AND DMT TEAM RESPONSIBLE, ASSISTED BY SITE ENVIRONMENTAL COORDINATOR AND PLANT AND EQUIPMENT STAFF) 60
4.21 CONTROL ACCESS TO DEMONSTRATION SITE (PM AND DMT RESPONSIBLE) 61
4.22 DEVELOP AND COORDINATE PUBLIC RELATIONS (PR) ACTIVITIES AS NEEDED (PM AND DMT RESPONSIBLE THROUGH ENERGY SYSTEMS PR DEPARTMENT) 61
4.23 SCHEDULE AND COORDINATE DEMONSTRATION REVIEWS, SENIOR MANAGEMENT READINESS REVIEWS, AND APPROVAL MEETINGS (PM AND DMT RESPONSIBLE) 61

5. MANAGEMENT STEPS FOR THE CONDUCT OF DEMONSTRATION AND CLOSEOUT 65
5.1 DEMONSTRATION SETUP (PM AND DMT RESPONSIBLE) 65
5.2 ENSURE DEMONSTRATION READINESS (PM AND RESPONSIBLE) 65
5.3 OPERATE DEMONSTRATION AND COLLECT DATA (PM AND DMT RESPONSIBLE) 66
5.4 CLOSEOUT OF DEMONSTRATION (PM AND DMT DMT RESPONSIBLE) 66
5.5 ANALYZE PROCESS AND OPERATIONS DATA (PM AND DMT RESPONSIBLE) 67
5.6 PREPARE DEMONSTRATION REPORTS (PM AND DMT RESPONSIBLE) 68

Appendix A. REQUIREMENTS FOR RESEARCHERS INITIATING TREATABILITY STUDIES ON HAZARDOUS WASTES DEFINED UNDER THE RESOURCE CONSERVATION AND RECOVERY ACT (RCRA) 69
Appendix B. PROCUREMENT OF VENDOR CONTRACT 73
Appendix C. EXAMPLE OF PROJECT DESCRIPTION 75
Appendix D. EXAMPLE OF PROJECT TEST PLAN 99
Appendix E. EXAMPLE OF WASTE MANAGEMENT PLAN 159
Appendix F. NEPA COMPLIANCE 175
Appendix G. MARTIN MARIETTA ENERGY SYSTEMS, INC., OFF-SITE FACILITIES CONDUCTING TREATABILITY STUDIES CHECKLIST 177

Appendix H. ENVIRONMENTAL REVIEW SUMMARY 185

Appendix I. EXAMPLE OF SAFETY ASSESSMENT 189

Appendix J. EXAMPLE OF HEALTH AND SAFETY PLAN 211

Appendix K. EXAMPLE OF QUALITY ASSURANCE/QUALITY CONTROL PLAN 243

Appendix L. EXAMPLE OF READINESS REVIEW PLAN 273

FOREWORD

FOREWORD

The conduct of successful technology demonstrations is essential to achieving the objectives established by the U. S. Department of Energy (DOE) for the remediation of contaminated sites and the management of waste generated from past, present, and future operations. It is equally essential that these technology demonstrations be conducted in a manner that is strictly adherent to pertinent regulatory requirements and policies and with full recognition of the liabilities associated with access to hazardous waste sites. Thorough planning is, therefore, paramount to the successful conduct of a technology demonstration; the identification of all requirements, be they technical, financial, or legal, is a necessary component of a sound technology demonstration plan.

In recognition of the importance of detailed planning with regard to both the demonstration of emerging technologies and their eventual implementation, the Office of Waste Research and Development Programs and the Environmental Restoration Division at Martin Marietta Energy Systems, Inc., have teamed to produce this "Guidance Manual for Conducting Technology Demonstration Activities." The purpose of this manual is to provide personnel who are planning and/or conducting technical demonstrations with a guide that describes the actions necessary to plan, implement, and conclude a technical demonstration in a manner that will maximize the benefits. The document can also serve as a useful resource to supporting organizations that are likewise essential to the successful conduct of technology demonstrations by providing them with information on the scope of the requirements that must be met.

If the innovative technologies that are sorely needed to effectively and economically achieve the DOE objectives are to be implemented, proper planning, execution, and reporting of the associated demonstrations are essential not only for performance assessment but also to satisfy regulatory acceptance requirements. This manual will help ensure that this happens.

A. P. Malinauskas, Director
Waste Research and Development Programs

David W. Swindle, Director
Technical Integration
Environmental Restoration Division

PREFACE AND ACKNOWLEDGMENTS

This document is intended to be a "living" document, thus suggesting this flexible loose-leaf-notebook format. It will be updated with increasing experience and must be modified in accordance with current regulations and work practices. Candidate changes and contributions by users are invited and will improve the efficacy of this guidance manual.

The impetus to use demonstrations for the evaluation of waste technologies stems from the insightful DOE/OR leadership of Bill Bibb and Bill Adams with the able assistance of Bob Sleeman and Mike Jugan. Subsequently, the need for and use of technology demonstrations in the waste management and environmental restoration areas have received increasing national attention.

This demonstration guidance manual is based upon the experience of several Energy Systems employees in addition to those of the authors. Because this manual is the result of collective experience, we may inadvertently err in not listing individuals who have made important contributions. We hope such oversights, if any, are minimal. Especially noteworthy are the contributions of John Kennerly and Paul Hollenbeck, who, under the tutelage of Richard Genung, pioneered in waste technology demonstration management; Allen Croff for budgetary and management guidance; Helen Braunstein for NEPA compliance guidance; Nancy Dailey for RCRA treatability studies guidance; Lance Mezga for Energy Systems off-site facilities checklist and environmental review forms; and Bill Brooke for QA/QC guidance.

Energy Systems sponsors for this guidance manual were Dave Swindle, Environmental Restoration Division, and Tony Malinauskas, Waste Research and Development Program. Important critical reviews were completed by Jack Watson, Phil McGinnis, Waldo Golliher, Lynn Jones, Davis Milan, Larry Long, Jim Bradbury, Tommy Bowers, C. H. "Pete" Peterson, J. M. Eaton, and Mike Stiefel. Waldo Golliher's critical review was especially insightful and important with respect to operational reviews and management procedures.

The importance of typing, editing, and secretarial assistance can not be overemphasized. We are deeply appreciative of the efforts of Janice Woodard, Debbie Brown, Linda Fields, and John Nunn for preparing this manual for publication and Donna Reichle for invaluable editing assistance.

LIST OF ACRONYMS

AcDM	Activities Description Memorandum
ADS	Activity Data Sheet
ALARA	As Low as Reasonably Achievable
CWMD	Central Waste Management Division
CXD	Categorical Exclusion Determination
D&D	Decontamination and Decommissioning
DMT	Demonstration Management Team
DOD	Department of Defense
DOE	Department of Energy
EA	Environmental Assessment
EAM	Environmental ALARA Memorandum
EIS	Environmental Impact Statement
Energy Systems	Martin Marietta Energy Systems, Inc.
EPA	Environmental Protection Agency
ER	Environmental Restoration
ERD	Environmental Restoration Division
ES&H	Environmental, Safety, and Health
FONSI	Finding of No Significant Impact
FSAR	Final Safety Assessment Report
GDP	Gaseous Diffusion Plant
HQ	Headquarters
NEPA	National Environmental Policy Act
NPDES	National Pollutant Discharge Elimination System
ORNL	Oak Ridge National Laboratory
OR	Oak Ridge Field Office
ORP	Operational Readiness Process
OSHA	Occupational Safeguard Health Administration
OTD	Office of Technology Development

PI	Principal Investigator
PM	Project Manager
PR	Public Relations
QA	Quality Assurance
QC	Quality Control
R&D	Research and Development
RCRA	Resource Conservation and Recovery Act
RD&D	Research, Development, and Demonstration
RDDT&E	Research, Development, Demonstration, Testing and Evaluation
RFP	Request for Proposal
ROD	Record of Decision
RRB	Readiness Review Board
SARA	Superfund Amendments and Reauthorization Act of 1986
SOW	Statement of Work
TDHE	Tennessee Department of Health and Environment
TTP	Technical Task Plan
WM	Waste Management
WR&D	Waste Research and Development

EXECUTIVE SUMMARY

This demonstration guidance manual has been prepared to assist Martin Marietta Energy Systems, Inc. (Energy Systems), staff in conducting demonstrations. It is prepared in checklist style to facilitate its use and assumes that Energy Systems personnel have project management responsibility. In addition to a detailed step-by-step listing of procedural considerations, a general checklist, logic flow diagram, and several examples of necessary plans are included to assist the user in developing an understanding of the many complex activities required to manage technology demonstrations.

Demonstrations are pilot-scale or field-scale applications of often innovative technologies to determine the commercial viability of the technologies to perform their designed function. Demonstrations are generally conducted on well-defined problems for which existing technologies or processes are less than satisfactory in terms of effectiveness, cost, and/or regulatory compliance. Critically important issues in demonstration management include, but are not limited to, such factors as communications with line and matrix management and with the U. S. Department of Energy (DOE) and Energy Systems staff responsible for management oversight, budgetary and schedule requirements, regulatory compliance, and safety.

Although this document assumes that all predemonstration activities related to the project have been completed and that the necessary funds and initial approvals for the demonstration have been secured before commencement of demonstration activities, guidance on accomplishing the predemonstration activities is given in Sect. 2. Predemonstration activities would include, but not be limited to, identification of the need for the demonstration, commitment of necessary funds and resources, and definition of the objective, scope, and goals of the demonstration.

Guidance for conducting demonstration activities is presented in Sect. 3, Organization for Demonstration Management; Sect. 4, Management Steps Leading to Demonstration Approval; and Sect. 5, Management Steps for the Conduct of Demonstrations and Closeouts. Appendices include detailed discussions of the requirements for treatability studies under the Resource Conservation and Recovery Act (RCRA), National Environmental Policy Act (NEPA) compliance, and procurement of vendor contracts. The appendices also include

examples of a project description, project plan, waste management plan, quality assurance/quality control plan, an environmental review, a safety assessment, and a checklist for offsite facilities conducting treatability studies.

The demonstration Project Manager (PM) is responsible for organization, setup, conduction, and closeout of the demonstration. The PM may be assisted by a demonstration management team (DMT). Management complexity dictates the use of the team concept for demonstration management. The PM must have the assistance of many specialists to ensure regulatory compliance along with safe and cost-effective demonstration operation. Therefore, the DMT concept involves specialists on an as-needed (ad hoc) basis to ensure authoritative and appropriate action (e.g., regulatory compliance, permitting, quality assurance, procurement, legal, environmental, safety, operations). Management oversight consists of demonstration readiness reviews, operation approval by the management oversight team, and final demonstration approval by the DOE Site Manager and the appropriate DOE/Oak Ridge Operations (ORO) Program Manager or representative. Thus, senior management involvement consists of two tiers or levels of management: (1) oversight to ensure demonstration operational readiness and (2) approval to permit the demonstration operation. It is Energy Systems policy (GP-24) to conduct formal operational readiness processes (ORP), including focused readiness reviews, to ensure that a given activity is ready to proceed to the next increment of work by identifying and minimizing the risks associated with mission success. It is the responsibility of the PM to ensure that the ORP is considered and the decision basis documented for startup of significant, new, or modified, activities including technology demonstration. The ORP applies to all Energy Systems facilities, operations, processes, systems, construction efforts, and projects. ORP is a management tool that establishes and verifies the status and degree of readiness of an activity to start up or to proceed with the next phase of work. ORP complements other quality assurance (QA), environmental safety and health (ES&H), engineering, and management policies and procedures.

Demonstrations include a complex array of activities, some of which will occur sequentially, but many of which most likely will take place at the same time. Most of the parallel activities occur at the front end; these consist principally of securing necessary permits, ensuring regulatory compliance [e.g., an Environmental Protection Agency (EPA) environmental assessment must be conducted, and supporting NEPA documentation must be

prepared], meeting site ES&H standards, and obtaining Energy Systems and DOE approvals. After approval, the actual conduct and completion of the demonstration consist of a series of sequential management steps.

A comprehensive Project Plan, including budget and task schedule, is the principal tool used by the PM to properly conduct the demonstration. This includes compliance with all applicable federal, state, and local regulations, DOE orders, and Energy Systems policies and procedures. The Project Plan is expected to provide the basis for coordination of all parties involved directly in performing the demonstration and keep those informed who have an interest in how the demonstration is proceeding. The budget and schedule are used to track progress on the project.

GUIDANCE MANUAL FOR CONDUCTING TECHNOLOGY DEMONSTRATION ACTIVITIES

Robert L. Jolley, Michael I. Morris, Suman P. N. Singh

1. INTRODUCTION

1.1 PURPOSE OF MANUAL

This demonstration guidance manual has been prepared to assist Martin Marietta Energy Systems, Inc. (Energy Systems), staff in conducting demonstrations. It is prepared in checklist style to facilitate its use and assumes that Energy Systems personnel have project management responsibility. (See General Checklist.)

1.2 PREDEMONSTRATION ACTIVITIES

Predemonstration activities would include, but not be limited to, the following:

1. identification of the need for the demonstration;
2. commitment of necessary funds and resources; and
3. definition of the objective, scope, and the goals of the demonstration.

Predemonstration activities are generally conducted by a Principal Investigator (PI), who may later, after the need for a demonstration is determined, be selected as the demonstration Project Manager (PM). Guidance on accomplishing the predemonstration activities is given in Sect. 2. The PM would be responsible for the following important predemonstration activities: preparation of the demonstration proposal, coordination of the funding activities, and development of contracts, if required (Sects. 2.8-2.11).

This document assumes that all predemonstration activities related to the project have been completed and that the necessary funds and initial approvals for the demonstration have been secured before commencement of demonstration activities (Sects. 3-5).

1.3 DEMONSTRATION ACTIVITIES

Demonstrations are pilot-scale or field-scale applications of often innovative technologies to determine the commercial viability of the technologies to perform their designed function. Demonstrations are generally conducted on well-defined problems for which existing technologies or processes are less than satisfactory in terms of effectiveness, cost, and/or regulatory compliance.

By their very nature, demonstrations are more complex than research & development (R&D) activities but less complex than full-scale implementation, in terms not only of engineering scale but also in terms of support logistics, management, organization, and regulatory compliance. Demonstration complexity can be a function of many factors, such as size, location, equipment, and waste stream. Critically important issues in demonstration management include, but are not limited to, such factors as communications with line and matrix management and with U. S. Department of Energy (DOE) and Energy Systems staff responsible for management oversight, budgetary and schedule requirements, regulatory compliance, and safety.

Demonstration Team. The PM is responsible for organization, setup, conduction, and closeout of the demonstration. The PM may be assisted by a demonstration management team (DMT). Management complexity dictates the use of the team concept for demonstration management. The PM must have the assistance of many specialists to ensure regulatory compliance along with safe and cost-effective demonstration operation. Therefore, the DMT concept involves specialists on an as-needed (ad hoc) basis to ensure authoritative and appropriate action (e.g., regulatory compliance, permitting, quality assurance, procurement, legal, environmental, safety, operations).

Demonstration Objectives. Because a demonstration is a means of testing or evaluating an often innovative technology, equipment, or methodology, it consequently may or may not achieve set treatment goals. Nevertheless, if performed according to reasonable statistical experimental designs, and if the conclusions reached are statistically valid, a demonstration will achieve its objective (i.e., evaluation of the process, equipment, or technology). A demonstration is not R&D. However, preliminary R&D at the bench scale (e.g., treatability studies) may be necessary to scope demonstration efforts and may, in certain circumstances, be considered an integral part of the total demonstration package.

Demonstration Categories. Although this document pertains to DOE demonstrations managed by Energy Systems staff and located on DOE sites or on vendor sites (i.e., off-site), other categories of demonstrations also exist. For example, demonstrations may be categorized according to the performer or technology owner, the demonstration site, and funding source. Demonstration performers or technology owners may include Energy Systems, federal agencies [e.g., Department of Defense (DOD)], universities, private vendors [in response to a Request for Proposal (RFP)], or any combination thereof. Demonstration sites may include DOE or other federal agency sites, university or research institute sites, and private vendor sites. Funding sources may include governmental, academic, Energy Systems, and private vendor sources. Consequently, many possible permutations and combinations of this three-dimensional matrix may occur. However, the basic principles for conducting all demonstrations are essentially the same.

Demonstration Sites. The demonstration site is the location where the demonstration is performed. It may or may not correspond to the waste generation site.

1.4 LOGIC FLOW DIAGRAM

A simplified logic flow diagram for conducting technology demonstrations is given in Fig. 1.

1.5 SPECIAL CONSIDERATIONS

Because of Energy Systems' contractual relationship with DOE, mention is made of special factors that must be considered in technology demonstration activities.

Technology demonstrations involving classified waste streams and classified waste burials at inactive sites would be considered on a case-by-case basis. Specific consideration must be given and approvals obtained before classified materials may be involved in technology demonstrations. Wastes and materials are generally classified in accordance with national security requirements and should be dealt with accordingly.

Equipment involved in technology demonstrations can not be released from demonstration sites until it is released by appropriate management staff after inspection by the site's health physics and industrial hygiene staffs.

ORNL DWG 91A-106

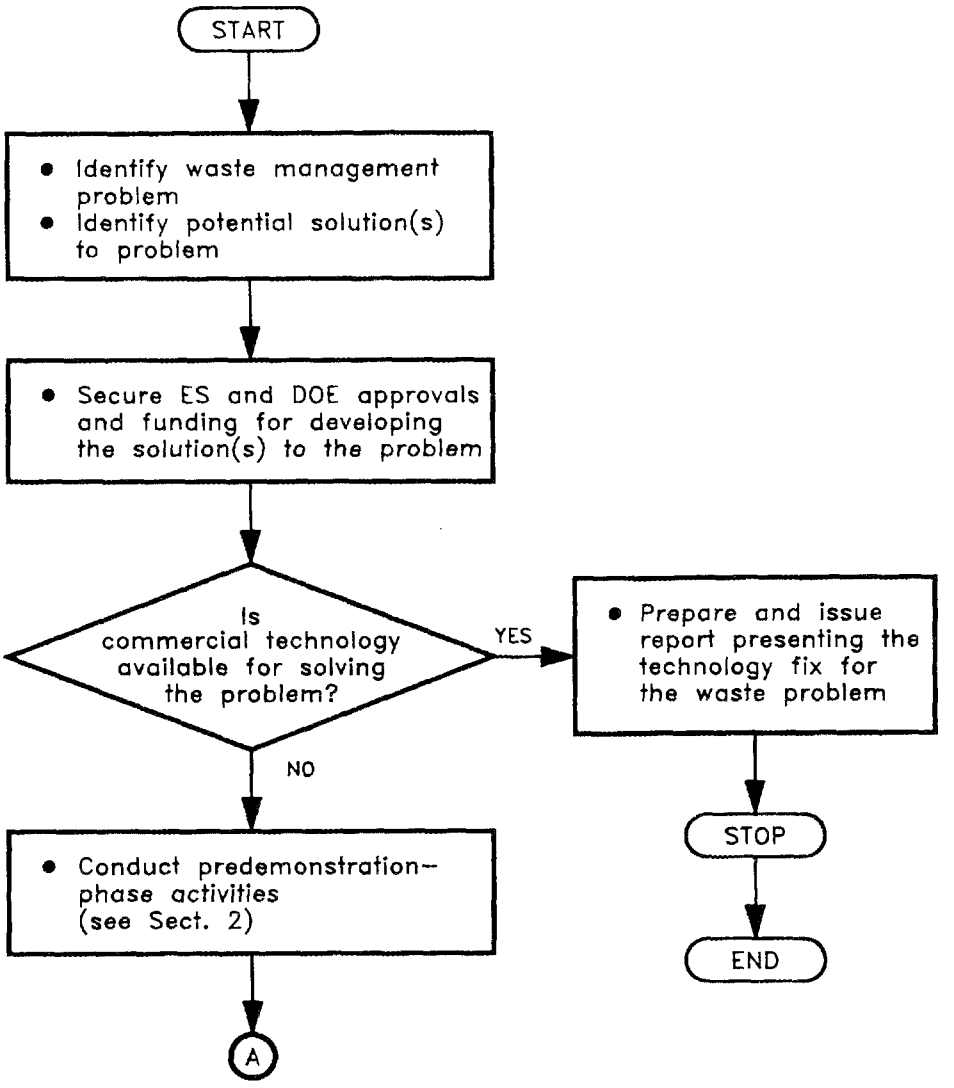

Fig. 1. Simplified logic flow diagram for conducting technology demonstrations.

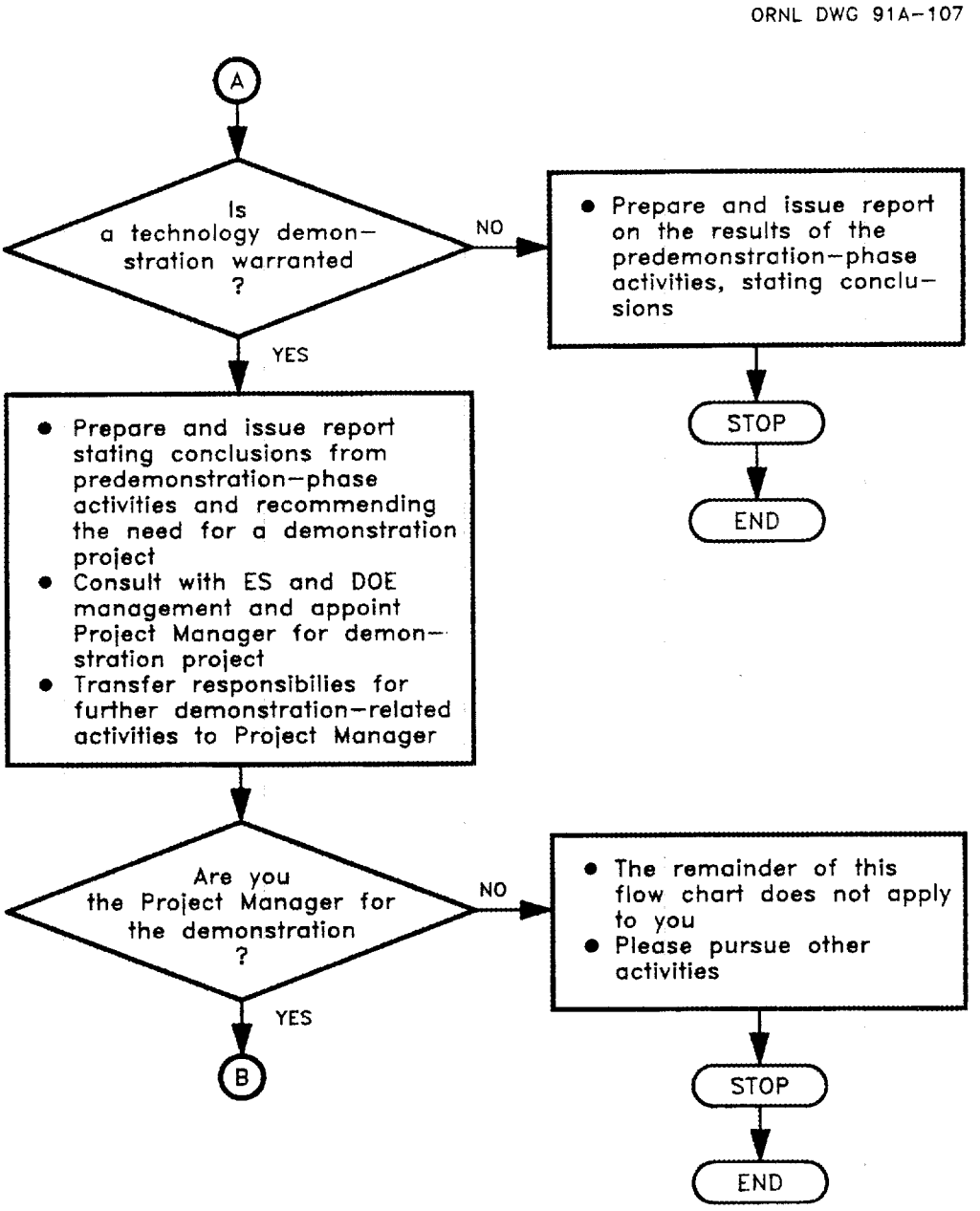

Fig. 1. (continued)

Fig. 1. (continued)

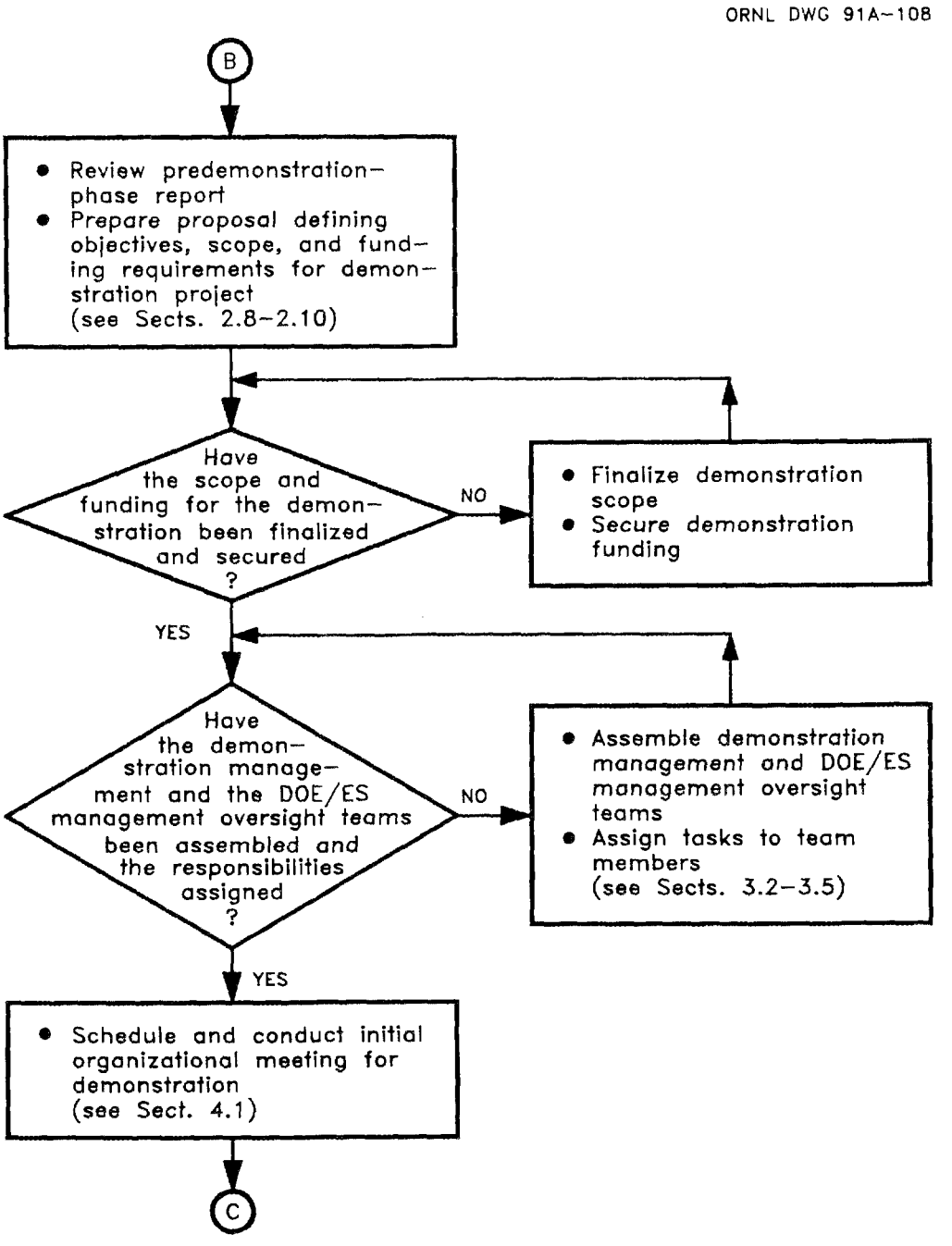

Fig. 1. (continued)

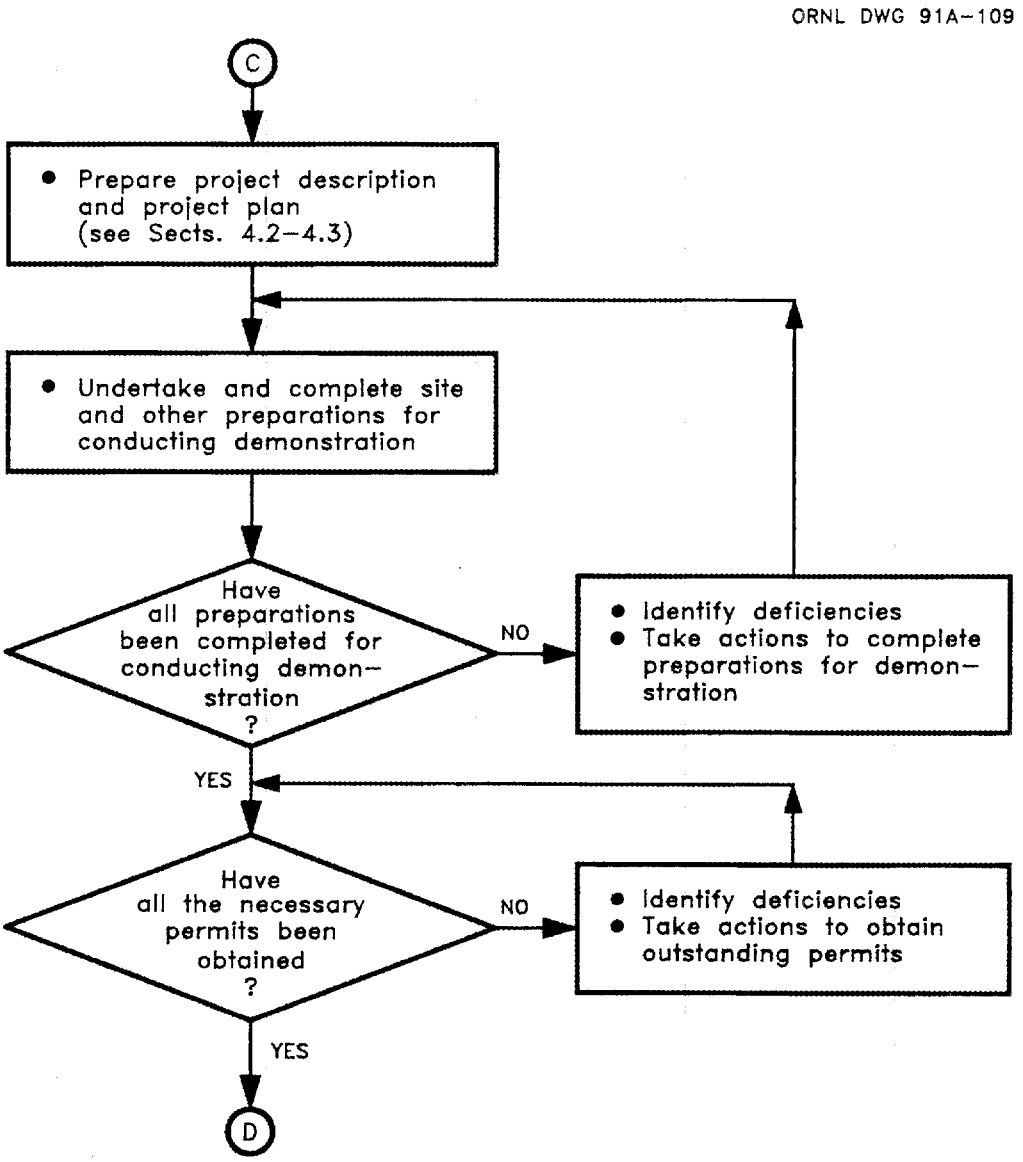

Fig. 1. (continued)

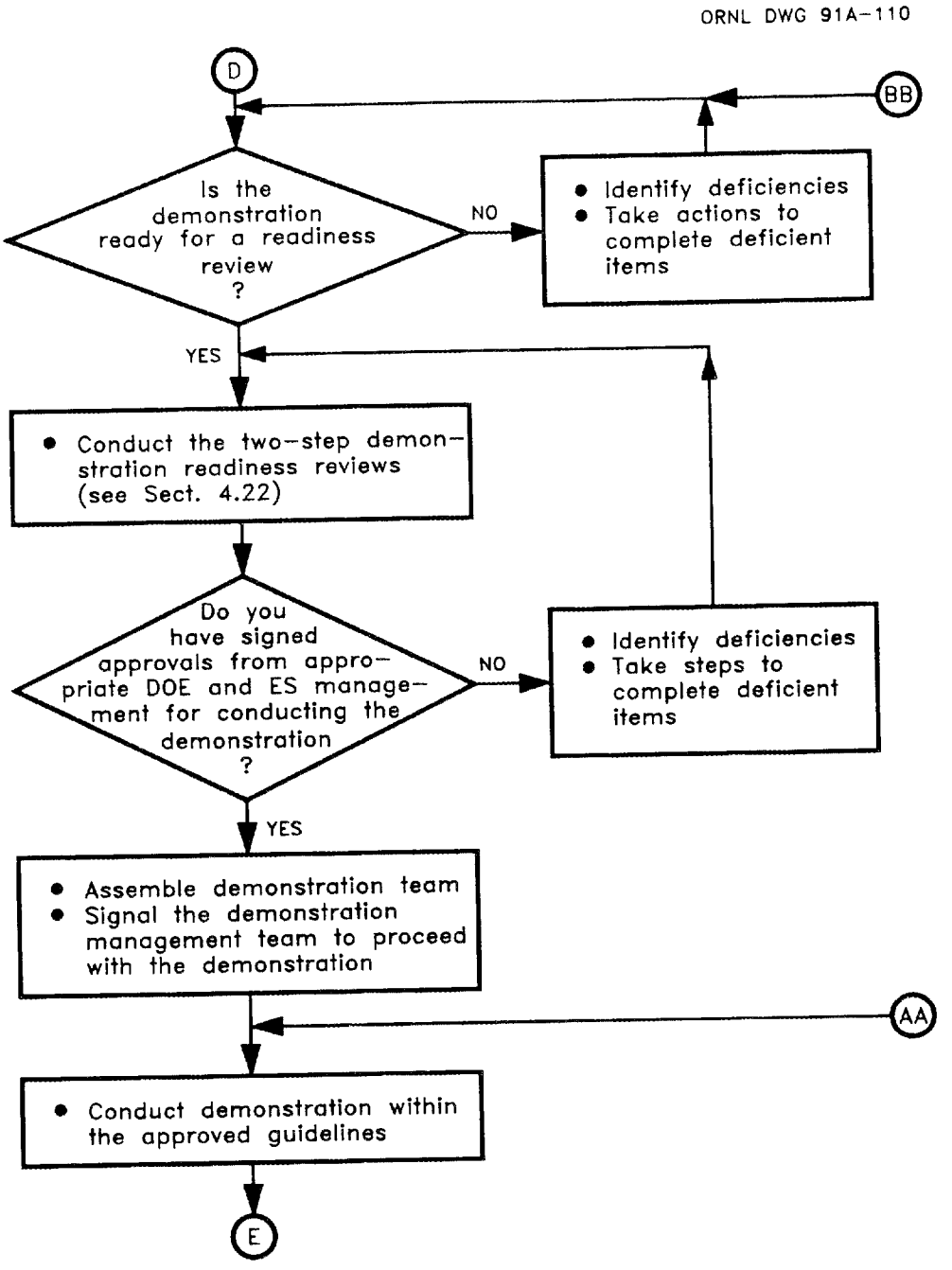

Fig. 1. (continued)

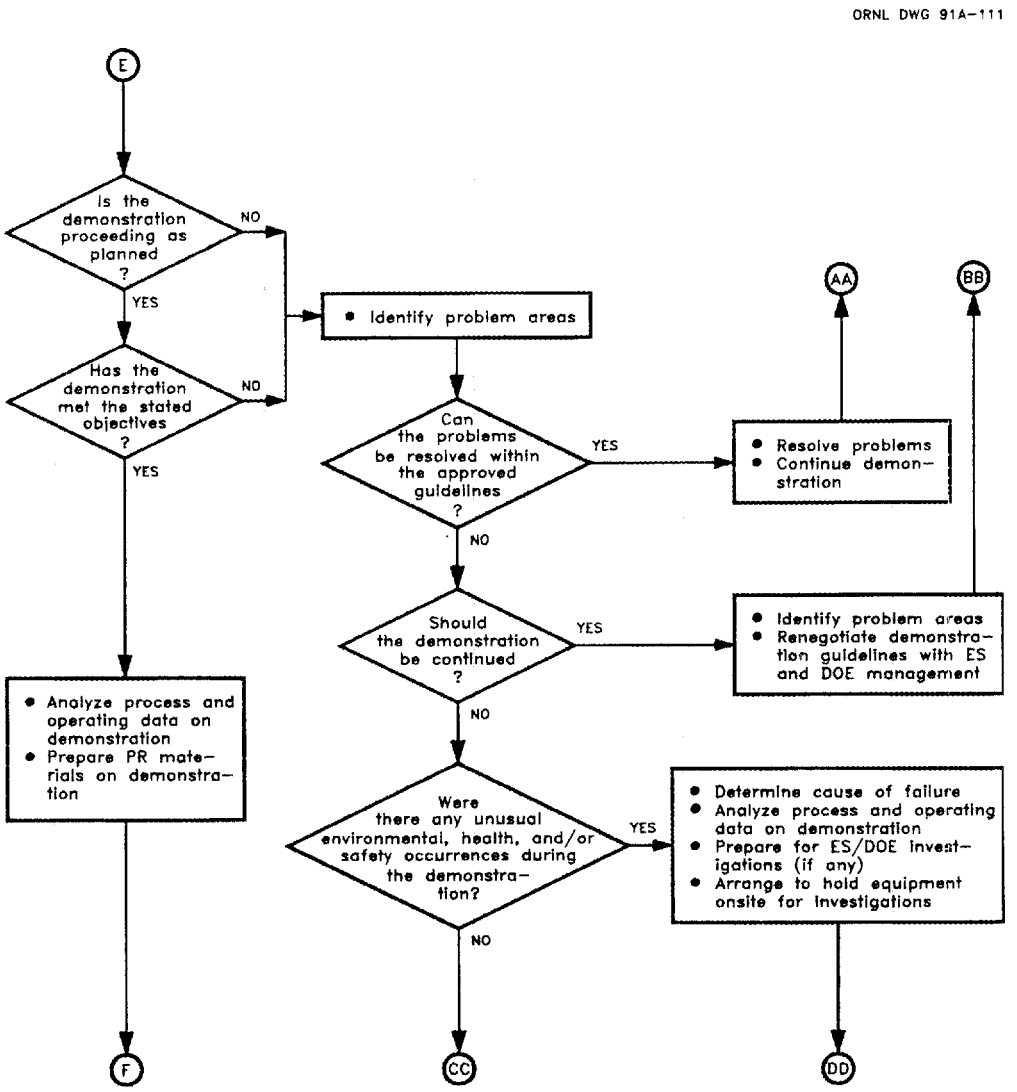

Fig. 1. (continued)

ORNL DWG 91A-112

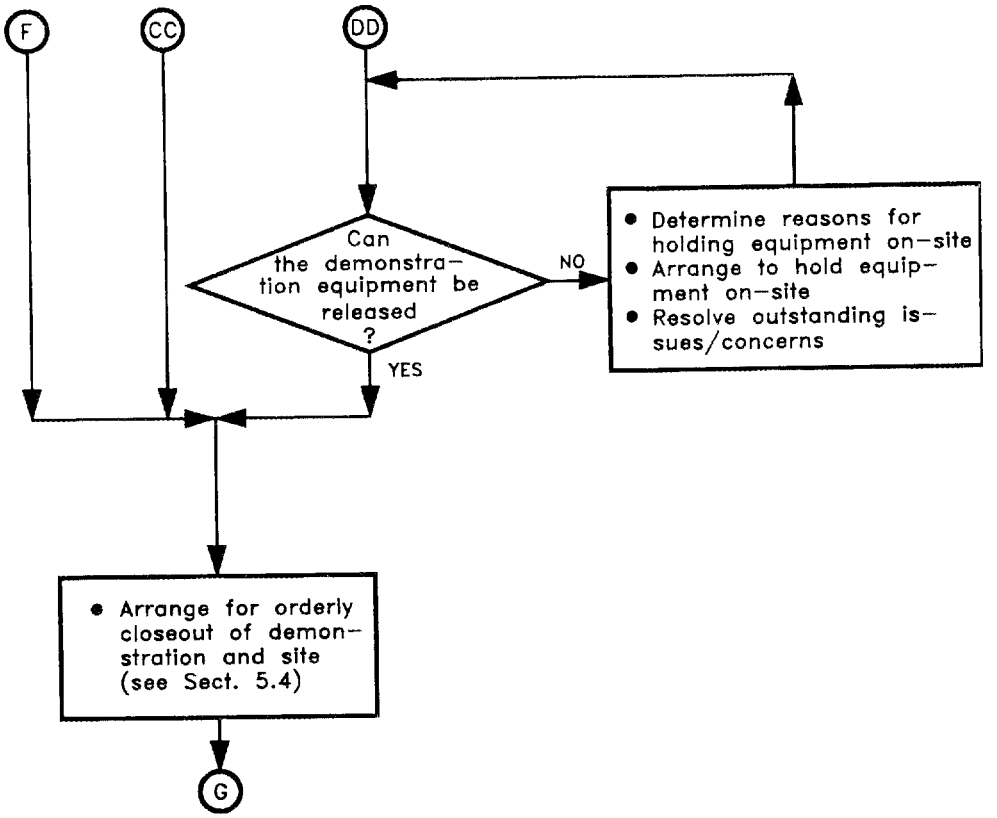

Fig. 1. (continued)

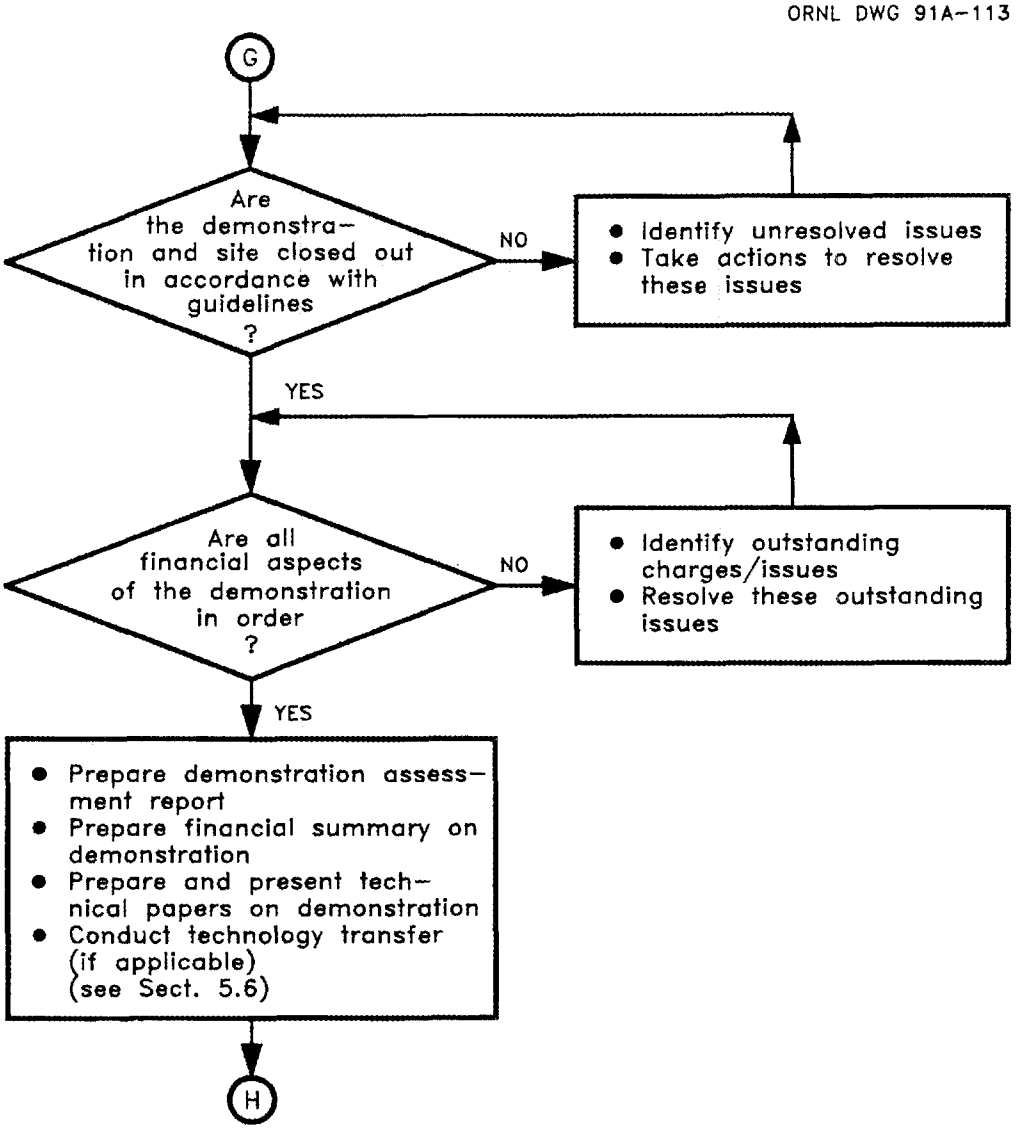

Fig. 1. (continued)

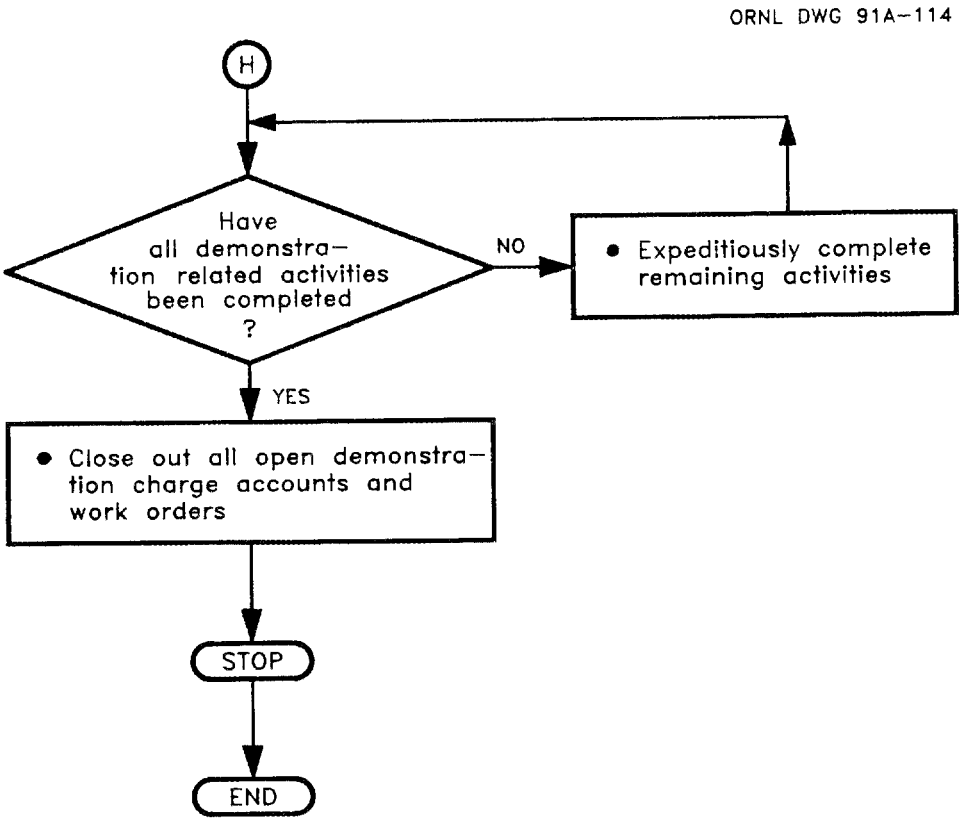

Fig. 1. (concluded)

The treatment and disposal of secondary wastes generated during technology demonstrations must be included appropriately in the planning process.

Technology demonstrations conducted at sites that are either scheduled for interim corrective measures or are in the process of active remediation must comply with the specific regulatory requirements for the site. Consequently, specific approvals for the demonstrations may be required from the regulatory bodies [e.g., Environmental Protection Agency (EPA) and state regulatory bodies)] in addition to Energy Systems and DOE/Oak Ridge Operations (ORO) approvals.

Demonstrations conducted by private vendors require specific contractual consideration for liability as well as rules and regulations for conducting the demonstration. In general, issues of legal liability need to be considered on a case-by-case basis with the liability issues defined in the contract.

2. PREDEMONSTRATION-PHASE ACTIVITIES

2.1 IDENTIFY PROBLEM AREA OR NEED (DOE AND/OR ENERGY SYSTEMS STAFF RESPONSIBLE)

Waste management problem areas are usually identified in response to a regulatory compliance or of a perceived environmental, health, and safety issue. The problem area may be specific to a particular waste or site or generic and national in scope. The problem identification may occur at any management level and may include, but not be limited to, the following entities:

1. Energy Systems site problem area or need;
   (a) DOE Site Manager
   (b) Energy Systems management
      (1) Site waste management and environmental restoration staff
      (2) Central Waste Management Division (CWMD) and Environmental Restoration Division (ERD) staff
2. DOE/OR problem area or need;
3. national (e.g., DOE/HQ, EPA, DOD) problem area or need;
4. other customer with problem areas or needs; and
5. Energy Systems division, program, or group staff.

2.2 SELECT A PRINCIPAL INVESTIGATOR (DOE AND/OR ENERGY SYSTEMS STAFF RESPONSIBLE)

After the problem identification, a PI is selected by the sponsoring Energy Systems division management and the Waste R&D (WR&D) program. The PI typically is the person who researches the need and proposes the technical approach to solve the need. The PI is responsible for problem definition and the predemonstration phase. The PI may enlist the support of a predemonstration management team that reports to him/her for its assignment in this activity. Generally, the PI is selected by Energy Systems line management after consultation with other Energy Systems division and program matrix management staff. The

PI may be selected as the demonstration Program Manager after the need for a demonstration is determined.

2.3 DEFINE PRINCIPAL INVESTIGATOR RESPONSIBILITIES

The PI has the principal responsibilities for defining the problem area and completing the predemonstration phase. The PI's responsibilities include:

1. Scope problem area or need. **No extensive project work is to be started without securing the necessary DOE/OR and Energy Systems approvals and appropriate funding.**
2. Obtain input from or communicate with DOE.
   (a) DOE/OR Manager
   (b) DOE/OR WM or ER representatives
   (c) DOE Site Manager
3. Obtain input from Energy Systems management.
   (a) Site Environmental Coordinator
   (b) Site representatives
   (c) Division, program, or group
   (d) WR&D Demonstration Coordinator
4. Initiate project and accomplish predemonstration phase.
5. Initiate NEPA determination requirements.
6. Select and coordinate predemonstration management team activities on an ad hoc basis.
7. Develop communications with DOE Site Manager; DOE/OR representatives; Energy Systems management oversight staff, line management, and matrix or program management; WR&D Program Demonstration Coordinator; and Site Demonstration Manager, Environmental Coordinator, Waste Manager, ER Manager and line and matrix or program management.
8. Obtain necessary DOE and Energy Systems approvals.
9. Comply with budget constraints.
10. Meet deliverables schedule.

11. Ensure compliance with regulations (e.g., permits and compliance therewith; waste treatment, storage, or disposal; safety).
12. Use good management practices.
13. To assist him/her in this activity, the PI may select and use a predemonstration management team.

2.4 SELECT A PREDEMONSTRATION MANAGEMENT TEAM (PI RESPONSIBLE FOR SELECTION WITH APPROPRIATE CONSULTATION)

The PI may select a predemonstration management team to assist in problem definition and accomplishment of the predemonstration phase. The composition of the team will vary depending upon the nature and complexity of the predemonstration effort. For example, if the predemonstration phase includes development of an RFP and a subsequent contract with a private vendor, Procurement/Purchasing staff members will form an important component of the team. Similarly, if bench-scale or treatability studies are necessary, the appropriate scientists and engineers will become important members of the team. Team members may include specialists that are consulted on an ad hoc basis. In addition to the PI, the team members may include the following:

1. other engineers/scientists/managers with special technical capabilities in certain specific disciplines;
2. Energy Systems site staff;
   (a) Site Environmental Coordinator
   (b) Sites Waste Manager
   (c) Site ER Manager
3. Procurement/Purchasing staff;
4. Legal staff;
5. permitting specialists;
6. NEPA specialists; and
7. Demonstration Coordinator.

2.5 CHARACTERIZE AND QUANTIFY PROBLEM AREA OR NEED (PI AND PREDEMONSTRATION MANAGEMENT TEAM RESPONSIBLE)

Definition of the waste management problem area or need will generally require further characterization and quantification. It is especially important at this stage for the PI and predemonstration management team to work closely with the DOE and Energy Systems site representatives to ensure thorough understanding of the problem and a close working relationship with the owners of the problem. Characterization of the problem area will include not only chemical, physical, and biological data, but also regulatory compliance issues and all information concerning possible technical solutions. Typical characterization and quantification data could include:

1. waste stream identification;
2. characterization data;
   (a) chemical constituents
      (1) quantities
      (2) concentrations
      (3) physical attributes
   (b) site factors
      (1) topography
      (2) geohydrology
3. regulatory concerns and decisions; and
4. temporal factors.

2.6 IDENTIFY POSSIBLE SOLUTIONS TO PROBLEM AREAS OR NEEDS (PI AND PREDEMONSTRATION MANAGEMENT TEAM RESPONSIBLE)

The knowledge and information gained during the characterization step will facilitate development of possible technical solutions to the problem area. The technical solutions should be evaluated and judged primarily on a technical basis. However, consideration should also be given the site's particular mission and other problem areas. Hence, communication with site representatives continues to be of especial importance. Evaluation of the problem area may indicate the need for laboratory bench-scale studies, treatability studies, or a large-

scale demonstration to provide additional information on possible technical solutions to the waste problem. Management steps could include:

1. Interface with Energy Systems sites.
2. Interface with DOE Site Manager and DOE/OR Program Manager(s).
3. Evaluate/select technologies, methodologies, an/or equipment pertaining to the problem area.
4. Determine if current technologies may be applied to the problem area without additional treatability studies or demonstration evaluation. If so, recommend accordingly to Energy Systems management responsible for the problem area. If item 4 does not address the problem area, then proceed with steps 5 and 6 given below.
5. Determine if laboratory bench-scale studies or treatability studies are necessary to evaluate the problem area. If so, include the justification for these studies in the demonstration proposal (Sect. 2.7).
6. Determine if a demonstration is necessary for evaluation purposes. If so, develop a demonstration proposal (Sect. 2.8).

2.7 DEVELOP PREDEMONSTRATION LABORATORY BENCH-SCALE OR TREATABILITY STUDIES PROPOSAL IF DETERMINED NECESSARY IN SECT. 2.6, ITEM 5 (PI AND PREDEMONSTRATION MANAGEMENT TEAM RESPONSIBLE). LABORATORY BENCH-SCALE OR TREATABILITY STUDIES WILL BE INCLUDED IN THE DEMONSTRATION PROPOSAL AS OUTLINED IN SECT. 2.8, ITEM 11

Preliminary R&D at the bench scale (e.g., treatability studies) may be necessary to further evaluate potential technologies and to scope demonstration efforts. The treatability studies proposal may stand alone or be considered an integral part of the total demonstration package (i.e., integrated into a demonstration proposal). If such studies are proposed and funded, management of the studies will include many of the same elements that are involved in demonstration management (See Sects. 3 and 4).

Permits or exemptions for treatability studies. Researchers must meet certain requirements to conduct treatability studies on Resource Conservation and Recovery Act (RCRA) hazardous waste (See Appendix A).

Bench-scale or treatability studies will address, but are not limited to, the following elements:

1. Laboratory bench-scale studies
   (a) evaluate the chemistry of the waste treatment processes;
   (b) validate the engineering flowsheet;
   (c) determine environmental, safety, and health (ES&H) factors;
   (d) determine potential technical problems; and
   (e) provide process data for scale-up purposes, for example;
2. Treatability studies
   (a) further validate and/or develop engineering flowsheet;
   (b) evaluate equipment operations/capabilities;
   (c) determine ES&H factors; and
   (d) provide engineering and equipment data for scale-up purposes, for example.

2.8 PREPARE DEMONSTRATION PROPOSAL IF DETERMINED NECESSARY IN SECT. 2.6, ITEM 6 (PI AND PREDEMONSTRATION MANAGEMENT TEAM OR THE PM, IF SELECTED)

Many sequential steps are required to prepare a demonstration proposal. Especially important is effective communication with sites and DOE representatives in order to develop clear definitive statements concerning the background information, need, technical aspects, schedule, and anticipated funding requirements. Important factors include:

1. Interface with Energy Systems sites.
2. Interface with Energy Systems Site Demonstration Manager and WR&D Demonstration Coordinator.
3. Interface with Energy Systems Site Environmental Coordinator.
4. Interface with DOE Site Manager.
5. Interface with Energy Systems senior management.
6. Interface with DOE/OR.

7. Interface with Energy Systems divisions, programs, or groups, especially the Central ER/WM organization, and the WR&D Director.
8. Define demonstration objectives.
   (a) Clear statement of goals
   (b) Clear understanding of who is the customer
9. Determine if private vendor will be contracted for conducting the demonstration.
10. Determine if the demonstration will be conducted on-site or off-site.
11. Prepare the demonstration proposal and include laboratory bench-scale or treatability studies proposal if appropriate (Sect. 2.7 above).
    (a) Prepare the Technical Task Plan (TTP) (currently required document for RDDT&E proposals to DOE).
        (1) Task description
        (2) Major subtasks
        (3) Schedule
        (4) Estimated cost
    (b) The TTP replaces the Activity Data Sheet (ADS), which is not required at this time by DOE. However, some divisions/programs may require an ADS on a project.
    (c) Prepare other forms as required.
12. Obtain approval for demonstration proposal.
    (a) Line management
    (b) Energy Systems site representatives
    (c) Energy Systems Site Demonstration Manager
    (d) CWMD Director (WM demonstrations)
    (e) ERD Director (for ER demonstration)
    (f) Energy Systems central management
        (1) WR&D Program
        (2) Work for Others Office (as needed)
        (3) Other program offices (as needed)
    (g) DOE Site Manager
    (h) DOE/OR ER and WM representatives

13. Submit proposal to appropriate potential funding agency.
    (a) DOE/OR
    (b) DOE/HQ
    (c) Other federal agency
    (d) Energy Systems
    (e) State
    (f) Private sector vendor
14. Respond to feedback received from funding agency.

2.9 FACILITATE FINANCIAL ACTIONS AFTER FUNDING APPROVAL (PI OR PM, IF SELECTED, RESPONSIBLE)

The PI interacts with the DOE Site Manager, DOE/OR, Energy Systems staff, and/or predemonstration management team in the areas of:

1. Funding appropriation
    (a) Ensure that the funds are available for conducting the demonstration.
2. Funding receipt - upon notification of funds
    (a) Prepare financial plan for the demonstration activity.
    (b) Open charge account numbers.
    (c) Open work orders.

2.10 CONTRACT WITH PRIVATE VENDOR, AS DETERMINED IN SECT. 2.9, ITEM 9 (PI AND PREDEMONSTRATION MANAGEMENT TEAM OR PM, IF SELECTED, RESPONSIBLE)

Steps for developing a contract with private vendors are outlined below (for more detailed discussion see Appendix B):

1. Prepare draft Statement of Work (SOW). This includes a description of work requested.
    (a) Description of work
        (1) Objectives

(2) Boundary conditions

(3) Task(s)

(4) Deliverables

(5) Schedule

(6) Funding

2. Review draft SOW for completeness and accuracy. Reviewers include:
   (a) Appropriate reviewers as needed
   (b) Procurement
   (c) Reviewers in the approval chain as needed
3. Prepare final SOW.
4. Prepare a "Request for Individual Consultant or Research and Development Subcontract" form (1127 Form).
5. If only one particular vendor is to be used, prepare a "Justification for Sole Source Procurement" form (UCN-15918).
6. Submit the SOW, 1127 Form, and Sole Source Justification (if needed) to:
   (a) The sponsoring Energy Systems division/organization for approval
   (b) Energy Systems Procurement
7. Energy Systems Procurement prepares Request for Proposal (RFP).
   (a) PI and predemonstration management team review RFP
   (b) Procurement issues RFP
8. Evaluate RFP responses.
   (a) Procurement, PI, and predemonstration management team evaluate responses
   (b) Procurement, PI, and demonstration management team approve the vendor(s) to be awarded the subcontracts
9. Subcontract with the vendor.
   (a) Procurement/Purchasing prepares the subcontracts
   (b) Procurement/Purchasing awards the subcontracts
10. Manage subcontract.
   (a) PI (and subsequently the PM) deals directly with the vendor project manager.

3. ORGANIZATION FOR DEMONSTRATION MANAGEMENT

Demonstration management is conducted by the PM with the support of the DMT. Management oversight consists of demonstration readiness reviews, operation approval by the management oversight team, and final demonstration approval by the DOE Site Manager and the appropriate DOE/OR Program Manager or representative. Thus, senior management involvement consists of two tiers or levels of management: (1) oversight to ensure demonstration operational readiness and (2) approval to permit the demonstration operation.

Oversight to ensure operational readiness. The management oversight team participates in the demonstration readiness reviews and ensures the regulatory compliance, and operational readiness of the demonstration.

Approval to permit the demonstration operation. Management participates in final demonstration readiness review and recommends approval for the demonstration to be conducted. The DOE Site Manager and DOE/OR PM give final approval for the demonstration to proceed.

Operational Readiness Process (ORP). It is Energy Systems policy (GP-24) to conduct formal operational readiness processes, including focused readiness reviews, to ensure that a given activity is ready to proceed to the next increment of work by identifying and minimizing the risks associated with mission success. The resources committed to any ORP should be consistent with the subject activity's cost, schedule, complexity, and probability and consequences of failure (i.e., quality, safety, environmental). It is the responsibility of the PM to ensure that the ORP is considered and the decision basis documented for startup of significant, new, or modified, activities including technology demonstration.

The ORP applies to all Energy Systems facilities, operations, processes, systems, construction efforts, and projects. ORP is a management tool that establishes and verifies the status and degree of readiness of an activity to startup or to proceed with the next phase of work. Formal mechanisms are described in this procedure for recording the measures taken to ensure the achievement of the desired state of readiness. ORP complements other quality assurance (QA), ES&H, engineering, and management policies and procedures.

3.1 PROJECT MANAGER (SELECTED BY ENERGY SYSTEMS STAFF)

The PM is responsible for management of the demonstration. The PM has the support of a DMT, which reports to him/her for its responsibility in this activity. Generally, a PM is selected by Energy Systems program management after consultation with other Energy Systems management staff as outlined below:

1. selection by Energy Systems program management;
2. input from, or communication with, appropriate Energy System line management and the DOE Site Manager; and
3. input from, or communication with, DOE/OR.

3.2 PROJECT MANAGER RESPONSIBILITIES

The PM has the principal responsibilities for ensuring completion of the demonstration. This includes conducting the demonstration within budget allocations and meeting demonstration deliverables on time. Operating with the advice and consent of appropriate program and line management, the PM selects and develops a demonstration management team. The PM responsibilities include:

1. **Ensure that no work is started without necessary DOE/OR and Energy Systems approvals and appropriate funding in hand. If it is the judgment of the PM that the demonstration can not be accomplished within the approved funding level, before starting the demonstration activity the PM must either (a) seek to modify the task deliverables and schedule to match the available funds or (b) not start the demonstration until adequate funding is secured. Demonstrations must be accomplished within the approved funding level.**
2. Develop communications with the DOE Program and Site Managers, Energy Systems management oversight staff, Site Demonstration Manager, WR&D Demonstration Coordinator, Site Environmental Coordinator, line management, and matrix or program staff, as needed.
3. Select and coordinate the DMT activities.

4. Ensure that procedures are in place for ES&H and that the demonstration activities are conducted in accordance with the procedures.
5. Initiate safety documentation.
6. Ensure preparation of QA and security plans.
7. Prepare the readiness review statement for documenting the decision basis.
8. Secure all necessary approvals and permits.
9. Undertake to successfully execute the demonstration.
10. Maintain cost control and comply with budget guidelines.
11. Meet deliverables schedule.
12. Hold periodic information meetings with Energy Systems management.
13. Hold periodic information meetings for DOE Program and Site Managers, as requested.
14. Prepare (monthly) reports. Technology demonstration reporting through the WR&D Program Office to DOE/OR and DOE/HQ Office of Technology Development (OTD).

3.3 DEMONSTRATION MANAGEMENT TEAM (GENERALLY SELECTED BY PM WITH INPUT FROM DOE AND ENERGY SYSTEMS STAFF)

The DMT consists of several professionals and specialists. Team members will vary on an ad hoc basis depending upon the magnitude, nature, and location of the demonstration. Team members may include any or all of the following:

1. PM (Team Coordinator)
2. WR&D Demonstration Coordinator
3. Engineers/scientists
4. Technicians
5. Financial Officer
6. WR&D Program QA Officer
7. QA specialists
8. Statisticians
9. Industrial safety specialists
10. Environmental specialists
11. OSHA specialists

12. Chemists/analytical chemists
13. Industrial hygienists
14. Health physicists
15. Security specialists
16. Fire protection
17. Plant and Equipment staff
18. Shift superintendent/emergency preparedness
19. NEPA specialists
20. Permitting specialists
21. Regulatory compliance specialists
22. Transportation specialists
23. Computer operators/technicians
24. Geohydrologists
25. Criticality safety specialist/engineer
26. Training specialist
27. Scientists/engineers with expertise in special areas

3.4 DEMONSTRATION MANAGEMENT TEAM RESPONSIBILITIES

The PM and the DMT work closely together to accomplish the demonstration. The team assignments and work are coordinated by the PM or designee. The DMT generally consists of several "permanent" members and many specialists who function on an ad hoc basis. The full-time team members assist in the operational management aspects of the demonstration (e.g., maintenance of documentation files, QA/QC, logistics support, engineering consultation, coordination of sampling and analysis). The ad hoc specialist team members assist in areas requiring specialized professional training and experience (e.g., NEPA documentation specialists assist in developing appropriate documentation for obtaining the required environmental permits, industrial safety experts review the safety aspects of the demonstration). DMT responsibilities include, but are not limited to, the following:

1. Prepare the Project Description.
2. Prepare the Project Plan.
   (a) Management plan
   (b) Task schedule
   (c) Task budget and financial plan
3. Review all plans and demonstration activities.
4. Participate in the ORP (See GP-24), demonstration reviews, senior management readiness reviews, and approval meetings.
5. Facilitate site security compliance.
6. Ensure appropriate demonstration waste management.
7. Ensure regulatory compliance.
8. Coordinate permitting and environmental compliance activities.
9. Coordinate EPA compliance activities.
10. Ensure meeting of site environmental requirements.
11. Ensure safe demonstration operations.
12. Ensure compliance with OSHA and site industrial hygiene standards.
13. Ensure compliance with health physics standards.
14. Accomplish procurement activities as needed.
15. Evaluate ES&H standards of vendor sites as necessary.
16. Prepare and ensure compliance with demonstration QA plan (Energy Systems or vendor as needed).
17. Develop and maintain a documentation file.
18. Characterize waste as needed.
19. Coordinate site preparation for demonstration.
20. Control demonstration site access.
21. Develop and coordinate public relations activities as needed.

3.5 DOE AND ENERGY SYSTEMS MANAGEMENT OVERSIGHT TEAM

The management oversight team consists of the senior management staff (or designated representatives) responsible for reviewing and giving final approval for conducting the demonstration. Management oversight consists of demonstration readiness reviews, operation

approval by the management oversight team, and final demonstration approval by the DOE Site Manager and the appropriate DOE/OR Program Manager or representative. Thus, senior management involvement consists of two tiers or levels of management: (1) oversight to ensure demonstration operations readiness and (2) approval to permit the demonstration operation.

Oversight to ensure operational readiness. The management oversight team participates in the demonstration readiness review and ensures the regulatory compliance and operational readiness of the demonstration. If a Readiness Review Board (RRB) is required, the RRB makes recommendations regarding proceeding with the activity's next increment of work (See ORP, GP-24).

Approval to permit the demonstration operation. Management participates in final demonstration readiness review and recommends approval for the demonstration to be conducted. The DOE Site Manager and DOE/OR Program Manager give final approval for the demonstration to proceed.

The PM and DMT are responsible for notification of the senior management oversight team concerning appropriate meetings. Interim meetings may be held for information purposes. The Energy Systems senior staff members or representatives may vary depending upon demonstration location, the site involved, and demonstration objectives. Team members will likely include an appropriate subset of the following possible senior management staff:

1. DOE Site Manager
2. DOE/OR Program Manager
3. Energy Systems Vice President for Technical Operations
   (a) ERD Director
4. Energy Systems Vice President for Applied Technology
   (a) Energy Systems K-25 Site Manager
   (b) CWMD Director
5. Energy Systems Vice President for Enrichment
   (a) Energy Systems Portsmouth Gaseous Diffusion Plant (GDP) Site Manager
   (b) Energy Systems Paducah GDP Site Manager
   (c) Portsmouth GDP Demonstration Manager
   (d) Paducah GDP Demonstration Manager

6. Energy Systems Vice President for Oak Ridge National Laboratory (ORNL)
   (a) ORNL representative
   (b) ORNL Demonstration Manager
   (c) WR&D Director
7. Energy Systems Vice President and Manager for Y-12 Plant
8. Energy Systems Environmental & Safety Activities Director

4. MANAGEMENT STEPS LEADING TO DEMONSTRATION APPROVAL

Demonstrations include a complex array of activities, some of which will occur sequentially, but many of which most likely will take place concomitantly. Most of the parallel activities occur at the front end; these consist principally of securing necessary permits, ensuring regulatory compliance, meeting site ES&H standards, and obtaining Energy Systems and DOE approvals. After approval, the actual conduct and completion of the demonstration consist of a series of sequential management steps.

4.1 SCHEDULE AND CONDUCT INITIAL ORGANIZATION MEETING (PM AND DMT RESPONSIBLE)

The initial meeting of the demonstration management team lays the foundation for successful accomplishment of the demonstration. The desired objectives of this meeting are:

1. Inform the management team of member assignments and responsibilities.
2. Establish demonstration line management.
3. Establish demonstration approval chain.
4. Establish appropriate communications links with:
   (a) Demonstration personnel
   (b) Energy Systems site representatives (including site plant shift superintendents, Site Demonstration Manager, Site Environmental Coordinator, etc.)
   (c) Energy Systems line management
   (d) Energy Systems senior management
   (e) DOE Site Manager
   (f) DOE/OR Program Manager
5. Initiate the following:
   (a) Preparation of the Project Description
   (b) Preparation of the Project Plan
      (1) Management plan
      (2) Task schedule (project demonstration schedule)

(3) Task budget and financial plan (project demonstration cost)

(c) Review of site security requirements

(d) Review of site waste management requirements

(e) Review of all regulatory compliance issues

(f) Permitting activities

(g) NEPA compliance activities

(h) Appropriate environmental activities

(i) Appropriate industrial safety activities

(j) Appropriate industrial hygiene activities

(k) Appropriate health physics activities

(l) Appropriate fire prevention and fire protection activities

(m) Vendor site ES&H evaluations as necessary

(n) Criticality safety activities

(o) Development of an emergency plan in the unlikely event that something goes wrong

(p) Procurement activities as needed

(q) Development of demonstration QA plan

(r) Waste characterization activities (if necessary)

(s) Site preparation activities

(t) Public relations activities as needed

4.2 PREPARE PROJECT DESCRIPTION AND OBTAIN APPROVAL (PM AND DMT RESPONSIBLE). SEE APPENDIX C FOR EXAMPLE PROJECT

The Project Description represents an extension of the basic control document prepared for the original funding request. The Project Description is used for initiation of demonstration activities (e.g., NEPA review permitting). The Project Description also forms the basis for later preparation of the more extensive and detailed Project Plan. Consequently, it will contain all or most of the elements of the Project Plan, but in less detail; that is, the Project Plan represents an extension of the Project Description.

An example Table of Contents for a Project Description follows. Note that other elements may be necessary, depending upon the particular demonstration being described. For very simple demonstrations, some elements may be omitted.

1. Introduction
    - 1.1 Objective of the Project
    - 1.2 Scope
    - 1.3 Background and Rationale
    - 1.4 Project Organization
    - 1.5 Preliminary Studies
        - 1.5.1 Laboratory Tests
        - 1.5.2 Bench-scale Tests
2. Site Description
    - 2.1 Location
    - 2.2 Characterization
3. Demonstration Systems Design
4. Schedule
5. Site Requirements
    - 5.1 Spaces and Location
    - 5.2 Access and Security
    - 5.3 Personnel Staging
    - 5.4 Site Preparation
    - 5.5 Utilities
    - 5.6 Emergency Preparedness and Response
6. Waste Generation and Disposal
    - 6.1 Composition and Volume of Expected Waste Streams
        - 6.1.1 Liquids
        - 6.1.2 Gases
        - 6.1.3 Sludge and Solids
    - 6.2 Waste Disposal
7. Health and Safety
8. QA
9. Permitting
    - 9.1 NEPA
    - 9.2 RCRA Research Development and Demonstration (RD&D) Permit or Treatability Exclusion

9.3 Site Requirements

9.3.1 NPDES Permits, As Required

9.3.2 Air permits, As Required

10. Contracts and Legal Issues

Management steps required in this area include:

1. Prepare Project Description.
2. Obtain required approvals as needed.
   (a) PM and DMT
   (b) Energy Systems line management
      (1) Site Demonstration Manager
      (2) Site Environmental Coordinator
      (3) Site Manager or representative
   (c) DOE Site Manager
   (d) DOE/OR Program Manager or representatives

4.3 PREPARE PROJECT PLAN (PM AND DMT RESPONSIBLE)

A comprehensive Project Plan is the tool used by the PM to properly conduct the demonstration. This includes compliance with all applicable federal, state, and local regulations, DOE Orders, and Energy Systems policies and procedures. See Appendix D for example Project Plan.

The Project Plan is expected to provide the basis for coordination of all parties involved directly in performing the demonstration and keeping those informed who have an interest in how the demonstration is proceeding. The Project Plan represents an extension of, and builds upon, the previously prepared Project Description (See Sect. 4.2).

The essential Project Plan requirements are outlined below. (Not all items in the outline will be applicable to every demonstration, and project plans for individual demonstrations should be customized consistent with the requirements for the demonstration.)

PROJECT PLAN OUTLINE

1. Title

   Exact title as used in all documents

2. Background and purpose

   Project description, purpose relative to technology needs, and other objectives.

3. Funding baseline and contingency factor

   Funding or estimated cost and the contingency factor with a brief statement of the relation of funding to the scope of the project. The project funding and scope should always be consistent. Projects should normally not proceed without an approved financial plan with funding consistent with the scope. Any variance should be documented and approved by authority at the appropriate level (See Sect. 4.4).

4. Data to be generated

   Plans for data generation. Typical data are:

   (a) Analytical data before and after the demonstration
   (b) Physical characterization data
   (c) Treatability data
   (d) Secondary waste data
   (e) Commitment to sampling and analysis plan, if applicable

5. Waste materials

   Waste material description, characterization, handling, and disposal.

6. Project approach

   Project approach with any special plans. Examples are:

   (a) Project phases
   (b) Sample runs
   (c) Full-scale trial runs
   (d) Laboratory-scale tests

7. Permitting

   Plans and requirements for permits along with responsibilities for each step of the process. Some steps are:

   (a) Prepare data
   (b) Complete forms
   (c) Request letters
   (d) Conduct meetings relative to permitting

8. Site preparation and equipment setup

   Interfacing requirements with responsibilities. Interfaces may typically include:

   (a) Utilities (air, water, electricity, telephone, etc.)
   (b) Office space
   (c) Site layout map
   (d) Radiological surveys
   (e) ES&H
   (f) Security limits
   (g) Fire protection
   (h) Contractor orientation
   (i) Other interfaces as needed

9. Emergency Plan

   An emergency plan should be developed in the unlikely event that something goes wrong. Responders (shift superintendents, fire responders, emergency squad, etc.) must have orientation training on the demonstration prior to startup.

10. Readiness review and approval to proceed (See GP-24)

    Commitment to a readiness review and how the readiness review will be conducted. Necessary elements include:

    (a) Responsibilities
    (b) Actions required
    (c) Approvals required to proceed

(d) How the approvals will be obtained

(e) How approvals will be documented

11. Mobilization

Requirements and ground rules for the demonstration. Elements may include:

(a) List of contractor equipment to be brought on-site.

(b) List of support services or other equipment to be furnished by Energy Systems.

(c) Personnel to be on-site at equipment arrival.

(d) Verification and documentation of acceptances of positioning of equipment.

(e) Equipment setup description and responsibilities

(f) Notification requirements

(g) Hours when equipment arrival can be accommodated

12. Conduct of the demonstration

How the demonstration will be conducted. Items that may need to be considered and defined include:

(a) Applicable plans, procedures, etc.

(b) Control and required approvals for field changes

(c) Stop work authority

(d) Schedules

(e) Treatment/processing

(f) Material staging/feeding

(g) Waste volumes and types generated by the demonstration process. (A waste management plan should be developed if the volumes and types are significant.)

(h) Residue waste collection, management, and disposal. (A waste management plan should be developed if the demonstration is complex.)

(i) Chain of command and shutdown authority

(j) Decontamination (including responsibilities)

(k) Equipment disassembly and removal

(l) Site restoration (including responsibilities)

(m) Off-normal or unusual occurrence notifications to Plant Shift Superintendent

13. Project radiological controls

Radiological control and implementation. Elements should include:

(a) Applicable work procedures

(b) Work permits

(d) Other required radiological documents

(e) As low as reasonably achievable (ALARA) requirements

Other items that may be included are:

(a) Site preparation and radiological restrictions

(b) Site responsibilities and boundaries

(c) Personnel monitoring

(d) Instrumentation

(e) Decontamination

(f) Protective equipment

(g) Radiation protection

(h) Qualification and training

14. Industrial safety and hygiene controls

What industrial safety factors must be considered and to which activities they will be applied.

Why and what industrial hygiene controls are necessary and to what activities they will be applied. Include such items as:

(a) Protective clothing

(b) Exposure to hazardous chemicals

15. Closeout of demonstration

A closure plan should be prepared to ensure appropriate management of all waste materials/equipment meets regulatory requirements.

(a) Approval for disassembly or moving of demonstration equipment

(b) Decontaminate and/or decommission equipment as necessary

(c) Restore demonstration site to acceptable criteria.

(d) Dispose or store treated and untreated waste. (If the demonstration is complex, a waste management plan should be prepared.)

(e) Dispose, store, or treat secondary waste. (If the demonstration is complex, a waste management plan should be prepared.)

(f) Depending upon the magnitude of the demonstration, RCRA closure may be necessary

16. Final report

Requirements for the final report and strategy for developing and preparing the report. Items to be considered are:

(a) Responsibilities for preparation

(b) Description of equipment

(c) Description of processing

(d) Demonstration results

(e) Problems

(f) Unusual experiences

(g) Evaluation of data

(h) Unexpected changes

(i) Emissions

(j) Unit costs of processing

(k) ES&H experiences

(l) Radiological experiences

(m) Safety assessments/studies impact

(n) Conclusion

(o) Approvals required

(p) Distribution requirements

17. Schedule baseline

Project schedule including all steps with appropriate explanations.

18. Planned subcontracting and estimated cost

Some projects will include preplanned subcontracting (other than supply and expense-type items). Describe work to be subcontracted, where possible; its estimated cost; and justification for subcontracting. If possible, let subcontracts on a firm fixed price and on a competitive basis to enable control of subcontracting costs.

19. Project responsibilities

All organizations both directly and indirectly involved in any phase or aspect of the project should be listed in this section along with a description of the involvement, responsibilities, and names of responsible individuals. Include reporting and briefing responsibilities.

20. Ground rules for changes

Document the required method and procedure for making and approving changes to the Project Plan after it is approved. The Project Plan should be a controlled document. The PM should maintain a history of changes with appropriate description of the changes. Changes in the Project Plan must have ES&H approval prior to initiation. Changes may require permit modification, NEPA documentation, etc.

21. Approvals

The approvals section should include, as a minimum, the following dated signatures:

(a) PM

(b) Energy Systems WR&D Program Director

(c) Site Manager

(d) DOE Site Manager

(e) DOE/OR Program Manager

22. Distribution

Approved distribution list. PM to maintain and keep distribution list current.

Management steps in the Project Plan area include:

(a) Prepare a comprehensive Project Plan.

(b) Obtain required approvals as needed

(1) PM and DMT

(2) Energy Systems line management

(3) Site Demonstration Manager

(4) Site Environmental Coordinator

(5) Site Manager or representative

(6) WR&D Program Director

(7) DOE Site Manager

(8) DOE/OR Manager or representatives

(c) Maintain the Project Plan and document required changes.

(d) Use the Project Plan as a "road map" to accomplish the demonstration activities.

4.4 PREPARE PROJECT DEMONSTRATION COST AND SCHEDULE (PM RESPONSIBLE)

One of the first action items to be accomplished after defining project goals is to develop a budget and schedule for the project. The budget and schedule will then be used to track progress on the project. In order to develop a schedule and budget, the PM must first identify all the tasks that are involved in order to accomplish the goal(s) of the project. After defining the tasks, the next step is to estimate the time or duration required to complete each task. After all the tasks and their durations have been determined, they must be laid out in a logical manner, identifying the timing relationship between the tasks. In any project, some tasks must be completed before others can begin. This timing relationship between tasks is called dependency. Setting milestones as checkpoints, or interim deadlines, will help measure progress on the project. When these are integrated, the project schedule will be developed. An example of a project schedule for a demonstration, in which an outside vendor will perform the treatment, is shown in Fig. 2. Many of the tasks identified in this schedule, such as planning, permitting, procurement, and equipment preparation, are common to most demonstrations. Some software packages, such as Timeline® or Harvard Project Management®, are invaluable for assisting in the schedule preparation. However, the results are only as good as the accuracy of the information.

Having completed the schedules, the next planning step is to calculate project costs. There are numerous considerations: What are the overhead costs? What unexpected hidden

GENERIC SOIL REMEDIATION DEMONSTRATION
RESPONSIBLE: MIM
As-of Date : 2/14/91 Schedule File : GENERIC

Task Name	Start Date	End Date	Duration
START	3/1/91	3/1/91	0.0
TECHNICAL TASK PLAN	3/1/91	5/31/91	64.0 days
ADDRESS/PREPARE PERMITS	3/1/91	8/6/91	110.0 days
ADDRESS/PREPARE PLANS	3/1/91	8/6/91	110.0 days
PROCUREMENT	3/1/91	9/26/91	146.0 days
Express of interest	3/1/91	4/12/91	30.0 days
Statement of work	3/1/91	4/12/91	30.0 days
RFP Preparation	4/12/91	5/30/91	33.0 days
Solicitation	5/30/91	7/17/91	33.0 days
Evaluation	7/17/91	9/12/91	40.0 days
Award	9/12/91	9/26/91	10.0 days
VENDOR AWARD	9/26/91	9/26/91	0.0
TREATABILITY WORK	4/2/91	9/11/91	113.0 days
APPROVE PERMITS	8/6/91	11/8/91	66.0 days
APPROVE PLANS	8/6/91	11/8/91	66.0 days
PLANS AND PERMITS APPRO	11/8/91	11/8/91	0.0
EQUIPMENT PREPARATION	9/26/91	10/29/91	22.0 days
SITE PREPARTATION	11/8/91	12/12/91	22.0 days
EQUIPMENT INSTALLATION	12/12/91	1/15/92	22.0 days
PERFORMANCE MONITORING	11/8/91	5/4/92	120.0 days
SYSTEM READINESS REVIEW	1/15/92	1/23/92	5.0 days
APPROVAL FOR OPERATION	1/23/92	1/23/92	0.0
SYSTEM OPERATION	1/23/92	4/3/92	50.0 days
END OPERATION	4/3/92	4/3/92	0.0
DATA EVALUATION	4/3/92	5/15/92	30.0 days
PREPARE DOCUMENTATION	5/15/92	6/29/92	30.0 days
DOCUMENTATION TO STATE	6/29/92	6/29/92	0.0
FINAL REPORT	6/29/92	8/28/92	43.0 days
END	8/28/92	8/28/92	0.0

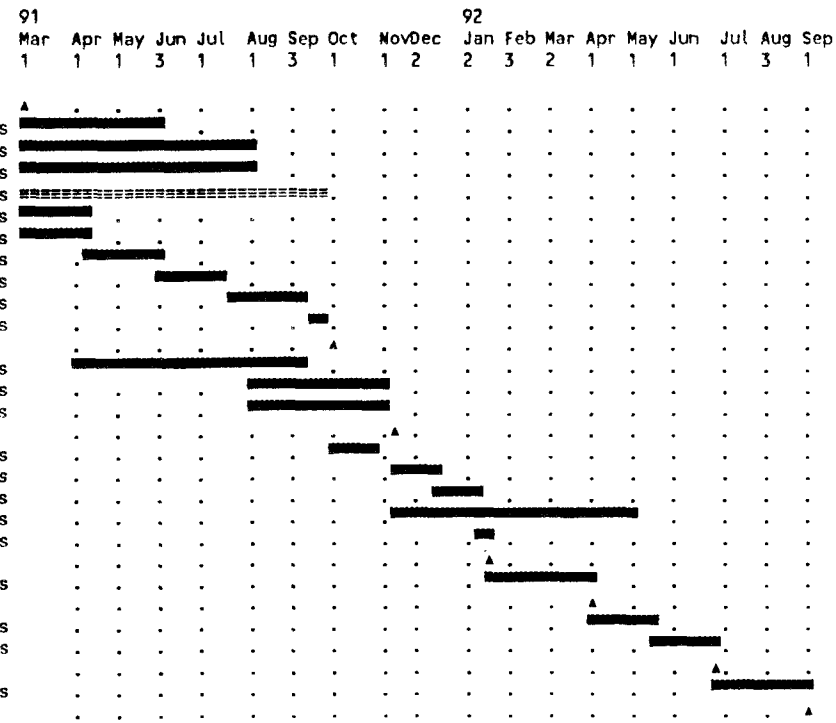

Detail Task ≡≡≡≡≡ Summary Task ••••• Baseline
(Progress) ≡≡≡≡≡ (Progress) ▸▸▸ Conflict
(Slack) ≡≡≡— (Slack) Resource delay
Progress shows Percent Achieved on Actual ▲ Milestone
---------- Scale: 5 days per character ----------

TIME LINE Gantt Chart Report, Strip 1

Fig. 2. Generic soil remediation demonstration.

costs can be identified? Can costs be reduced by employing strategies such as quantity buying or task combining? Calculating project costs can be simplified by identifying costs associated with each task. In this way, the PM can prepare a clear, accurate, and realistic budget that is easy to substantiate. The task-by-task approach ensures that there are supporting facts to defend the budget during the approval process. One of the important steps is to include a contingency. The contingency should be a percentage of the project costs reflecting the uncertainty. An example of a budget for the above-mentioned demonstration is shown in Table 1.

Strong management and relentless tracking may be required to meet designated milestones. Monitoring the project's progress regularly helps identify problem areas early. If there is slippage in the schedule or if costs are higher than expected to complete a task, it is important to isolate and correct the problem(s) and to develop alternate strategies to get the project back on schedule and/or within cost.

4.5 ENSURE COMPLIANCE WITH SITE SECURITY REQUIREMENTS AND COMPLIANCE WITH CLASSIFICATION REQUIREMENTS. (PM AND DMT COORDINATE WITH SITE SECURITY STAFF)

1. Arrange security briefing with site security manager for the DMT.
2. Ensure Energy Systems staff compliance with site security standards.
   (a) Arrange for passes, badges, and escorts as appropriate
   (b) Arrange for vehicle access as appropriate
3. Brief vendor staff concerning site security requirements as necessary. The briefer must be a certified trainer.
4. Ensure vendor staff compliance with site security requirements.
5. Ensure compliance with classification requirements if classified waste streams or materials are involved in the demonstration activities.

Table 1. Generic Soil Remediation Demonstration (FY-91 and FY-92)

	Title/person	Rate $/M	FY-91	FY-92	Vendor cost	Total
(1)	Project management	$10,500	7	12		19
(2)	Technical task plan	$10,500	1.5			1.5
(3)	Permits and plans	$10,500	4			4
(4)	Procurement	$10,500	3			3
(5)	Treatability	$10,500	3			3
(6)	Performance monitoring	$10,500	0	7		7
(7)	Site prep./equip. installation	$ 6,000	0	4		4
(8)	Data eval. and doc. prep.	$10,500	0	4		4
(9)	Final report	$10,500	0	2		2
	TOTAL	—	**18.5**	**29**	**0**	**47.5**
(10)	Intra-cost centers		194,250	286,500	0	480,750
(11)	Intra-division cost center					0
(12)	Inter-division cost center					0
(14)	Shop and maintenance (materials)					0
(15+17)	Consultant/R&D subs.					0
(16)	Travel		20,000	30,000		50,000
(18)	Major materials (nonexempt)					0
(19)	Supplies		6,287	9,622		15,910
(20)	Major materials (exempt)					0
(21)	Materials and subs. (exempt)		20,000	20,000	500,000	540,000
(22-24)	Misc., computer, and tech. information		29,054	44,612	50,000	123,666
(26)	P&E shops and maintenance					0
(27-31)	Support (Anal., QA., HP, Waste Disp., etc.)		50,000	100,000		150,000
(33-45)	Total other costs		17,515	41,187	65,265	123,967
(46)	Total gross costs		337,106	531,922	615,265	1,484,293
(50)	Total G&A + GPS		158,553	255,961	57,633	472,146
(51)	**NET OPERATING COSTS**		**$495,659**	**$787,883**	**$672,898**	**$1,956,439**
ACCUMULATED COSTS, $K (1,000's)			**$495,659**	**$1,283,542**	**$1,956,439**	**$1,956,439**

NOTES

Contingency approximately 10% on misc. line before overhead.
Supplies approximately 2% before overhead.
G&A = 50%

4.6 ENSURE COMPLIANCE WITH SITE WASTE MANAGEMENT REQUIREMENTS (PM AND DMT COORDINATE, WITH SITE ENVIRONMENTAL COORDINATOR AS CONSULTANT)

1. Arrange waste management briefing with Site Environmental Coordinator for the DMT.
2. Develop a management plan for waste to be treated, the treated waste, and the wastes generated from the demonstration. (See Appendix E for example waste management plan.)
3. Ensure compliance with the waste management plan.

4.7 ENSURE DEMONSTRATION REGULATORY COMPLIANCE (PM AND DMT COORDINATE, WITH SITE ENVIRONMENTAL COORDINATOR, SITE ENVIRONMENTAL PROTECTION OFFICERS, AND SITE RCRA COMPLIANCE STAFF AS CONSULTANTS). SEE ALSO SECTS. 4.8 AND 4.9

Some regulatory compliance issues will not be dealt with directly by demonstration organizers. That is, demonstrations conducted under the auspices of a site will generally fall under the regulatory umbrella of that site. For example, demonstrations will not generally need an NPDES permit but must comply with the site NPDES permits; demonstrations may also be covered by the site's Part A and Part B RCRA permits. RCRA RD&D permits and NEPA documentation are special regulatory issues that are dealt with in more detail in Sects. 4.8 and 4.9.

1. Arrange regulatory compliance briefing with Site Environmental Coordinator or other regulatory compliance authority for DMT.
2. Develop a regulatory compliance plan for the demonstration activity. The plan should include a review of all compliance issues and development of all necessary permits:
   (a) State/EPA RCRA RD&D permit as needed (See Sect. 4.8)
   (b) State/EPA RCRA treatability studies exclusion as needed (See Sect. 4.8)
   (c) State air emissions permit as needed
   (d) Underground injection permit as needed
   (e) Site NPDES permit modifications (if required)
3. Ensure compliance with the regulatory compliance plan.

4.8 OBTAIN NECESSARY STATE/EPA RESEARCH, DEVELOPMENT, AND DEMONSTRATION PERMITS OR TREATABILITY STUDIES EXCLUSIONS (PM AND DMT COORDINATE, WITH SITE RCRA COMPLIANCE STAFF AND PERMITTING SPECIALISTS AS CONSULTANTS)

Waste treatment demonstrations may vary in size and quantities of waste treated. Small demonstrations may qualify for treatability studies exclusion from RCRA hazardous waste regulations. Large- or full-scale demonstration may require an RD&D permit. RD&D permits are issued by the state of Tennessee for treatment facilities for studies involving innovative and experimental hazardous waste treatment technologies for which specific treatment of disposal permit standards is not promulgated. An RD&D permit covers both facility construction and operation and is granted on an annual basis. Renewals are allowed for up to 3 years. The PM should consult with Site RCRA compliance staff members very early in the planning process to avoid possible lengthy delays in the RD&D permitting process.

Management steps to ensure compliance include:

1. Contact Site Environmental Protection Officer or Site RCRA compliance staff for assistance.
2. Determine whether the demonstration qualifies for a treatability studies exclusion or requires an RD&D permit. The requirements for small-scale treatability studies are:
   (a) Studies use no more than 1000 kg of nonacute hazardous waste (i.e., characteristically hazardous, spent solvents or U-listed wastes); 1 kg of acute hazardous waste (i.e., P-listed wastes); or 250 kg of soil, water, or debris contaminated with acute hazardous waste
   (b) No more than a total of 250 kg of "as received" waste from the generator can be tested on a single day
   (c) No more than 1000 kg of waste (excluding treatment residues that are generated) may be stored in the laboratory
3. If the demonstration meets the waste quantity criteria, submit the information on studies to the Site RCRA compliance staff (e.g., N. S. Dailey, ORNL; A. G. Hodgson, K-25 Site; M. S. Burris, Y-12 Plant and ORNL/Y-12) for their facility by February 7 of each

year, beginning in February 1991. The RCRA compliance staff will then compile the overall submittal for their respective facilities.

4. Submit notification forms for planned treatability studies to the RCRA compliance staff a minimum of 10 d in advance of the receipt (via mail or shipping) of any hazardous waste for the purpose of conducting treatability studies.
5. Contact RCRA compliance staff for guidance on how to arrange for the delivery (via mail or shipping) of RCRA hazardous waste.
6. If a treatability studies exclusion is approved, ensure compliance with treatability exclusion requirements. These requirements are:
   (a) Return wastes and residues to the generator or ship to a permitted or interim status facility within 90 d after the study ceases or within 1 year of its receipt from the generator, whichever occurs first
   (b) Maintain records that demonstrate compliance with treatment rate limits, storage time, and quantity limits
   (c) Maintain records on treatment information, shipping, papers, and study contracts or agreements
   (d) Prepare and submit to the Tennessee Department of Health and Environment (TDHE) and EPA an annual report on all treatability studies (PM assists Site RCRA compliance staff)
   (e) Maintain all records that demonstrate compliance with the regulations for 3 years following the completion of each study
7. Determine if the demonstration requires an RD&D permit
   (a) Research efforts involving quantities of hazardous wastes in excess of that allowed under the treatability exclusion may require an RD&D permit
8. If the demonstration requires an RD&D permit, submit RD&D permit application to the TDHE. The review and approval process may require 1 to 2 years and considerable expense. The RD&D permit application addresses:
   (a) Facility operation
   (b) Maintenance
   (c) Closure
   (d) Remedial action
   (e) Sampling

9. If an RD&D permit is issued, ensure compliance with permit requirements. The TDHE RD&D permit may impose:
   (a) Limits on the types and quantities of hazardous waste used in the demonstration
   (b) Any or all of the standards set for permitted treatment of disposal facilities

4.9 ENSURE COMPLIANCE WITH NEPA REQUIREMENT (PM AND DMT RESPONSIBLE FOR COORDINATING WITH SITE NEPA COORDINATOR). THE PREPARATION OF NEPA DOCUMENTATION IS CONSIDERED IN MORE DETAIL IN APPENDIX F

The following steps should be undertaken:

1. **Each demonstration activity must have on record a DOE-signed NEPA decision document, such as a Categorical Exclusion Determination (CXD), a Finding of No Significant Impact (FONSI), or a Record of Decision (ROD). The demonstration operation may not begin without DOE-signed NEPA documentation.**
2. Contact the Site Environmental Coordinator or site regulatory compliance staff [(e.g., ORNL Environmental and Documentation Section (4-5774)] or the ORNL Environmental Coordinator (4-5776) for assistance in arranging the NEPA Environmental Assessment (EA) and preparing supporting EPA documentation as early as possible in the planning stage.
3. Provide a brief description of the project including anticipated schedules for construction and/or operation.
4. Arrange for a site visit.
5. Supply information for preparing the draft NEPA and supporting documents.
6. Review each draft.
7. Transmit comments and/or corrections.
8. Endorse the documentation in concurrence with document contents.
9. If the scope of the planned project changes significantly at any time prior to or subsequent to completion of the NEPA process, the PM repeats the above steps for the modification.

10. Prepare supporting documentation.
    (a) Supporting documentation for a CXD consists of the Project Description Memorandum [formerly called the Activities Description Memorandum (AcDM) or Environmental ALARA Memorandum (EAM)].
    (b) Supporting documentation for a FONSI is an EA.
    (c) Supporting documentation for a ROD is an Environmental Impact Statement (EIS).

4.10 ENSURE MEETING OF SITE ENVIRONMENTAL REQUIREMENTS (PM AND DMT RESPONSIBLE, WITH SITE ENVIRONMENTAL COORDINATOR AS CONSULTANT)

Although historically, ES&H issues have generally been managed by one site group, the recent management trend has been to separate the three areas. This is in part due to increasing regulatory complexity and resulting requirements for increased personnel specialization. Some management aspects of the three areas (Sects. 4.9, 4.10, and 4.12) may be integrated. This demonstration guidance manual has treated the three areas separately but has indicated areas of possible integration. Integration is especially valid for vendor site evaluations in the ES&H area. ES&H evaluation criteria have been collected into an offsite facilities checklist developed by the Energy Systems CWMD. The "Martin Marietta Energy Systems, Inc., Offsite Facilities Conducting Treatability Studies Checklist" is presented in Appendix G. This checklist includes detailed ES&H evaluation information for vendor sites. A similar but more extensive checklist is available for vendor sites involved in full-scale waste treatment activities.

Management steps for the environmental area include:

1. Arrange environmental requirements briefing with Site Environmental Coordinator for DMT.
2. Conduct an environmental review of the project in consultation with the Site Environmental Coordinator. (An Environmental Review Summary form is presented in Appendix H).
3. Develop a management plan for compliance with all environmental requirements.
4. Ensure compliance with the environmental plan.

5. Evaluate vendor ES&H plan as needed (See also Sects. 4.11 and 4.12).
6. Initiate vendor site ES&H evaluations as necessary (See also Sects. 4.11 and 4.12 and Appendix G).

4.11 ENSURE SAFE DEMONSTRATION OPERATIONS (PM AND DMT RESPONSIBLE FOR COORDINATION WITH SITE INDUSTRIAL SAFETY STAFF)

Safety assessments are critically important for demonstration management. (See Appendix I for example safety assessment.) Demonstration safety assessments are conducted by site safety specialists. Depending upon the findings, a more extensive Final Safety Assessment Report (FSAR) may be required. Site safety specialists generally have the responsibility for the preparation of such a document. The safety assessment may be integrated into a health and safety plan document for the demonstration. The health and safety plan is prepared in collaboration with the site industrial hygiene and industrial safety staffs (See also Sect. 4.12 and Appendix J).

Management steps for the safety area are:

1. Arrange safety briefing with site industrial safety staff for the DMT.
2. Assist site safety specialists as needed in preparation of the safety assessment. The site safety specialists will prepare the safety assessment.
3. Assist site safety specialists as needed in preparation of the FSAR if required.
4. Develop a management plan for ensuring safe demonstration operations.
5. Ensure compliance with the safety management plan.

4.12 ENSURE COMPLIANCE WITH OSHA AND SITE INDUSTRIAL HYGIENE STANDARDS (PM AND DMT RESPONSIBLE, WITH SITE INDUSTRIAL HYGIENE STAFF AS CONSULTANTS)

Access to demonstration sites must be limited to those persons with 24-h initial OSHA/SARA training and up-to-date 8-h annual refresher training (29 CFR 1910.120). Sites may also have special access requirements. Management steps for the industrial hygiene area are:

1. Arrange safety briefing with site industrial hygiene staff for DMT.
2. Assist site industrial hygiene staff as needed in preparation of the health and safety report if required. The site industrial hygiene staff will prepare the health and safety report.
3. Ensure required OSHA/SARA training for demonstration personnel.
4. Develop a site control plan to control the potential of employee exposure to hazardous substances.
5. Develop an industrial hygiene management plan for ensuring safe demonstration operations relative to OSHA standards.
6. Ensure compliance with the industrial hygiene management plan.

4.13 ENSURE COMPLIANCE WITH HEALTH PHYSICS REQUIREMENTS (PM AND DMT TO COORDINATE WITH SITE HEALTH PHYSICS STAFF)

Management steps for the radiological safety (Health Physics) area are:

1. Arrange safety briefing with site health physics staff for the DMT.
2. Assist site health physics staff as necessary in evaluation of demonstration site and demonstration operations.
3. Develop a health physics plan to control the potential of employee exposure to radiological hazards as necessary.
4. Ensure compliance with the health physics plan.

4.14 EVALUATE ES&H STANDARDS OF VENDOR SITES AS NECESSARY (PM AND DMT WITH CWMD AND ENVIRONMENTAL AND SAFETY ACTIVITIES STAFF)

ES&H evaluation criteria have been collected into an offsite facilities checklist developed by the Energy Systems CWMD. The "Martin Marietta Energy Systems, Inc., Offsite Facilities Conducting Treatability Studies Checklist" is presented in Appendix G. This checklist includes detailed ES&H evaluation information for vendor sites. A similar but more extensive checklist is available for vendor sites involved in full-scale waste treatment activities (See also Sect. 4.10).

Management steps for evaluation of vendor ES&H include:

1. Evaluate vendor ES&H plan as needed (See also Sects. 4.10 through 4.12).
2. Initiate vendor site ES&H evaluations as necessary (See also Sects. 4.10 through 4.12 and Appendix G).

4.15 ENSURE COMPLIANCE WITH ENGINEERING POLICIES AND PROCEDURES (PM AND DMT RESPONSIBLE, WITH SITE ENGINEERING STAFF AS CONSULTANTS)

The engineering staff for each site will have knowledge of the engineering policies and procedures applicable at that site. These policies and procedures have been developed to assist the sites in prevention of environmental/safety-related problems (e.g., diking for storage tanks). For example, an important Y-12 Plant document is *Design Standards for Hazardous/Toxic Waste and Material Storage Tanks, Dikes, and Transfer Stations*, Y/TS-104. Compliance with site engineering policies and procedures will help ensure adequate coverage of environmental and safety concerns.

4.16 ACCOMPLISH PROCUREMENT ACTIVITIES AS NEEDED (PM AND DMT RESPONSIBLE THROUGH ENERGY SYSTEMS PROCUREMENT/ PURCHASING STAFF)

Management steps for the procurement activities area are:

1. Arrange a procurement briefing with Energy Systems Procurement/Purchasing staff for the demonstration management staff.
2. Follow standard procurement procedures including appropriate documentation.

4.17 PREPARE AND ENSURE COMPLIANCE WITH DEMONSTRATION QUALITY ASSURANCE PLAN (PM AND DMT RESPONSIBLE, WITH SITE QA STAFF AS CONSULTANTS)

A properly prepared and used QA plan provides a pathway for monitoring the performance of projects in accordance with applicable management requirements. (See

Appendix K for example of QA plan.) The demonstration QA plan includes project quality procedures, work plans, reports, and documentation. Quality control (QC) is asserted through routine surveillance and, as appropriate, periodic audits. In order to correct nonconforming items or data and to satisfy findings issued during each audit, necessary corrective actions will be identified in the surveillances and audits. Management steps include:

1. Develop a demonstration QA plan early in the project cycle.
2. Evaluate vendor QA plan as needed.
3. Develop and maintain a documentation file (See also Sect. 4.17).
4. Conduct QA surveillance as needed and take indicated and necessary corrective actions.
5. Ensure compliance with the demonstration QA plan.

4.18 DEVELOP AND MAINTAIN A RECORD AND DOCUMENTATION FILE (PM AND DMT RESPONSIBLE, WITH SITE QA STAFF AS CONSULTANTS)

All important documents must be maintained in an appropriate file or location. This is important for QA purposes and to provide a "permanent" record of the demonstration. Management steps include:

1. Develop and maintain a documentation file for all significant documents, for example:
   (a) Proposal preparation documentation
   (b) SOW
   (c) RFP
   (d) Proposal approvals
   (e) Proposal funding approvals
   (f) Financial plans
   (g) Vendor contracts
   (h) Project Description
   (i) Project Plan
   (j) All specific management plans
   (k) Equipment drawings
   (l) Engineering flowsheets

(m) Quantities of material used and the ultimate disposition of these materials.

(n) Secondary waste(s) management

2. Ensure that the documentation file complies with the Energy Systems Policy for Document Control (ESS.6.1)

4.19 PERFORM NECESSARY SITE AND/OR WASTE CHARACTERIZATIONS (PM AND DMT RESPONSIBLE, WITH SITE MANAGEMENT, ANALYTICAL, AND STATISTICAL STAFF AS CONSULTANTS)

Additional characterization information may be required. Such characterization may require the development of a sampling and analysis plan and subsequent chemical analyses. Management steps include:

1. Consult with statisticians, hydrogeologists, and risk assessment experts as necessary for development of sampling and analysis plan.
2. Develop sampling and analysis plan.
3. Sample and analyze in conformance with the sampling and analysis plan.

4.20 COORDINATE SITE PREPARATION FOR DEMONSTRATION (PM AND DMT TEAM RESPONSIBLE ASSISTED BY SITE ENVIRONMENTAL COORDINATOR AND PLANT AND EQUIPMENT STAFF)

1. Ensure compliance with site waste management requirements.
2. Ensure compliance with site security requirements.
3. Coordinate site or plant services requirements.

   (a) Plant and Equipment staff

   (b) Engineering Division staff

   (c) Site security staff

   (d) Site utilities staff

   (e) Site fire department staff

   (f) Site waste management staff
4. Coordinate sampling and analytical needs.

5. Ensure compliance with all required site work permits.
6. Ensure compliance with all applicable plans and requirements (e.g., ES&H plans, QA plans).

4.21 CONTROL ACCESS TO DEMONSTRATION SITE (PM AND DMT RESPONSIBLE)

Ensures that only authorized people are granted access to the demonstration site (See also Sect. 4.12).

4.22 DEVELOP AND COORDINATE PUBLIC RELATIONS (PR) ACTIVITIES AS NEEDED (PM AND DMT RESPONSIBLE THROUGH ENERGY SYSTEMS PR DEPARTMENT)

1. Obtain adequate photo documentation.
2. Consider PR at appropriate times.
   (a) Vendor contract letting
   (b) Demonstration ending
   (c) "Successful" happenings
   (d) Publication of results
3. Coordinate PR activities with site management and the site PR representative.

4.23 SCHEDULE AND COORDINATE DEMONSTRATION REVIEWS, SENIOR MANAGEMENT READINESS REVIEWS, AND APPROVAL MEETINGS (PM AND DMT RESPONSIBLE)

The readiness review plan (See Appendix L) prepared in accordance with Energy Systems policy (ORP, GP-24) identifies the number of readiness reviews. Two readiness reviews are recommended at a minimum. The first review is designed to permit a review of all factors to determine if the demonstration is ready to be presented to DOE and Energy Systems senior management for readiness review and approval to proceed. If the demonstration is considered ready after the first review, the senior management review should be scheduled. Management steps include:

1. Ensure the preparation of a readiness review plan.
2. Define responsibilities for the review.
3. Define required actions.
   (a) Project Plan review
   (b) Safety assessment review
   (c) Site risk assessment
   (d) Regulatory compliance review
   (e) Site preparation review
   (f) Demonstration operations review
   (g) Other pertinent considerations
4. Establish approvals required to proceed with the demonstration.
5. Determine how the approvals will be obtained.
6. Determine how the approvals will be documented.
7. Schedule demonstration reviews as necessary.
8. Schedule senior management reviews as necessary.
9. Obtain necessary approvals.
   (a) Vendor as needed
   (b) Energy Systems management (as appropriate)
      (1) WR&D Program Director
      (2) Site Demonstration Coordinator
      (3) Site Environmental Coordinator
      (4) Site Manager or representative
      (5) CWMD Director or representative
      (6) ERD Director or representative
      (7) ES&H Director or representative
   (c) DOE Site Manager
   (d) DOE Program Manager or representative
10. Obtain document approvals.

5. MANAGEMENT STEPS FOR THE CONDUCT OF DEMONSTRATION AND CLOSEOUT

After approval by the Energy Systems senior management oversight team, the DOE Site Manager, and the DOE/OR Program Manager or representative, the demonstration is ready for performance. The following sequential management steps are required:

5.1 DEMONSTRATION SETUP (PM AND DMT RESPONSIBLE)

1. Ensure that the demonstration setup meets all established criteria
   (a) Site preparation
   (b) Utilities (electric, air, water)
   (c) Building facilities
   (d) Equipment installation
   (e) Equipment checkout
2. Ensure compliance with the readiness review plan and consideration of all issues as may be required by the RRB or that have been identified in the operational readiness process (GP-24).

5.2 ENSURE DEMONSTRATION READINESS (PM AND DMT RESPONSIBLE)

Ensure that the readiness review process is complete for the demonstration and that the demonstration activities are in compliance with the readiness review criteria and plan.

1. Inspect site for adequate preparation.
2. Determine availability of utilities (electric, air, water, telephones).
3. Inspect building facilities for adequateness.
4. Inspect equipment.
5. Check out equipment to ensure operational readiness.
6. Ensure readiness of operational personnel.
   (a) For safe operation

(b) For collection of data

(c) For QA/QC

7. Alert ancillary site personnel.
8. Alert security concerning operational status.
9. Ensure site control processes are in place.
10. Ensure waste management plan is in effect.
11. Determine availability of waste to be treated.
12. Ensure capability of handling waste output.
13. Establish communications and chain of command as needed.

5.3 OPERATE DEMONSTRATION AND COLLECT DATA (PM AND DMT RESPONSIBLE)

1. Ensure compliance with Project Plan.
2. Ensure maintenance of appropriate operational logs.
3. Ensure collection of requisite data.
4. Ensure filing of appropriate QA documentation.
5. Ensure adherence to ES&H standards.
6. Ensure good management practices.

5.4 CLOSEOUT OF DEMONSTRATION (PM AND DMT RESPONSIBLE)

1. Obtain approval for disassembly or moving of demonstration equipment. Consult with:

   (a) Site Health Physics

   (b) Site Industrial Hygiene

   (c) Site ES&H representative

   (d) Vendor representative as necessary
2. Decontaminate and/or decommission (D&D) equipment as necessary. Consult with:

   (a) Site D&D management

   (b) Site D&D personnel

   (c) Site Waste Manager

(d) Site Environmental Coordinator

(e) Vendor representative as necessary

3. Restore demonstration sites to acceptable criteria as defined in Project Plan. Consult with:

   (a) Site Plant and Equipment personnel

   (b) Site Environmental Coordinator

   (c) Site Demonstration Manager

   (d) Vendor representative as necessary

4. Dispose or store treated and untreated waste. Waste management should be conducted in compliance with the project plan or specific demonstration waste management plan, if prepared. Consult with:

   (a) Site Waste Manager

   (b) Site Environmental Coordinator

   (c) Vendor representative as necessary

5. Dispose, store, or treat secondary waste. Waste management should be conducted in compliance with the project plan or specific demonstration waste management plan, if prepared.

   (a) Site Waste Manager

   (b) Site Environmental Coordinator

6. Depending upon the magnitude of the demonstration, RCRA closure may be necessary.

5.5 ANALYZE PROCESS AND OPERATIONS DATA (PM AND DMT RESPONSIBLE)

The analysis of process and operations data is critically important for evaluation of the demonstration technology or equipment. Standard and thorough scientific and engineering analysis should permit development of statistically significant conclusions from the demonstration. Analysis should include, but not be limited to, the following categories:

1. Chemical data
2. Engineering data
3. Process effectiveness

4. Cost estimations
5. Personnel requirements
6. Lessons learned

5.6 PREPARE DEMONSTRATION REPORTS (PM AND DMT RESPONSIBLE)

The final step in a successful demonstration is the documentation of the demonstration results. This is usually accomplished by publication of the final report. Without dissemination of demonstration conclusions and information the demonstration can not be considered as completed.

Management steps include:

1. Ensure preparation of vendor reports as necessary.
2. Prepare Energy Systems reports as required.
3. Close out all open accounts and/or work orders.
4. Prepare financial reports as required.
5. Initiate and conduct technology transfer, if appropriate.
6. Prepare appropriate PR materials on the demonstration, such as technical papers, brochures, and video.

APPENDIX A

REQUIREMENTS FOR RESEARCHERS INITIATING TREATABILITY STUDIES ON HAZARDOUS WASTES DEFINED UNDER THE RESOURCE CONSERVATION AND RECOVERY ACT (RCRA)

Small-Scale Treatability Studies

This discussion outlines the requirements that all researchers must meet in order to maintain the treatability study exemptions while conducting treatability studies on RCRA hazardous wastes. First, the regulations stipulate certain operating limitations must be met. These limitations are:

1. No more than 1000 kg of nonacute hazardous waste (i.e., characteristically hazardous, spent solvents, or U-listed waste); 1 kg of acute hazardous waste (i.e., P-listed waste); or 250 kg of soil, water, or debris contaminated with acute hazardous waste is received for use in the study.[1]
2. No more than a total of 250 kg of "as received" waste from the generator can be tested on a single day.
3. No more than 1000 kg of waste (excluding treatment residues that are generated) may be stored in the laboratory.[1]
4. Wastes and residues must be returned to the generator or shipped to a permitted or interim status facility within 90 d after the study stops or within 1 year of its receipt from the generator, whichever occurs first.

Second, adequate records pertaining to the study must be maintained. The records must demonstrate compliance with the treatment rates limits, the storage time, and quantity limits. Additional records to be maintained include treatment information, shipping papers, and study contracts or agreements. In addition, an annual report on all treatability studies must be

---

[1]Refer to Title 40 *Code of Federal Regulations* part 261.20 through 261.33 or Tennessee Rule 1200-1-11-.02(3) through 40 for information on acute and nonacute hazardous wastes.

prepared and submitted annually to the regulators. All of the above records, which demonstrate compliance with the regulations, must be maintained for 3 years following the completion of each study.

Researchers must submit the information for their studies to RCRA compliance staff (N. S. Dailey, ORNL; A. G. Hodgson, K-25; M. S. Burris, Y-12 and ORNL/Y-12) for their facility by February 7 of each year, beginning in February 1991. The RCRA compliance staff will then compile the overall submittal for their respective facilities.

In order to promote compliance with the regulations, all researchers must submit notification forms for planned treatability studies to the RCRA compliance staff. That information must be submitted a minimum of 10 d in advance of the receipt (via mail or shipping) of any hazardous waste for the purpose of conducting treatability studies. RCRA compliance staff should be contacted for guidance on how to arrange for the delivery (via mail or shipping) of RCRA hazardous waste.

Further information on treatability studies is being transmitted to all ORNL Division Directors and Environmental Protection Officers. That information package includes the notification forms and annual report information to submit. Contact your Environmental Protection Officer or your RCRA compliance staff for a copy of the information package.

Research, Development, and Demonstration (RD&D) Permits

RD&D Permits are issued by the state of Tennessee for treatment facilities for studies involving innovative and experimental hazardous waste treatment technologies for which specific treatment or disposal permit standards are not promulgated. An RD&D permit covers both facility construction and operation and is granted on an annual basis. Renewals are allowed for up to 3 years.

Research efforts involving quantities of hazardous wastes in excess of that allowed under the treatability exclusion would require submittal of an RD&D permit application to the Tennessee Department of Health and Environment (TDHE). That application would address facility operation, maintenance, closure, remedial action, and sampling. The final operating permit issued by TDHE can impose limits on the types and quantities of hazardous waste used in the research. That permit can also impose any or all of the standards set for

permitted treatment or disposal facilities. The overall submittal and TDHE review and approval process could take up to 1 to 2 years to complete and could be very costly.

Thus, researchers planning larger-scale studies on hazardous waste must consult with their RCRA compliance staff members very early in the planning process for that research. If not, lengthy delays may be incurred as a result of the RD&D permitting process.

APPENDIX B
PROCUREMENT OF VENDOR CONTRACT

1. The demonstration project manager (PM) assumes the responsibility for procuring the outside vendor. He prepares the draft statement of work (SOW) which describes the services/processes/products requested from the private sector depending upon the project boundary conditions (e.g., objectives, funding, schedules). The PM can prepare the SOW himself/herself or, depending upon the magnitude of the project, can involve the demonstration management team (DMT) in the preparation of the draft SOW.
2. The draft SOW is reviewed by the appropriate people (e.g., the DMT and the project sponsor) for completeness and accuracy.
3. The PM reviews the comments received on the draft SOW and makes the necessary corrections.
4. The PM then prepares the 1127 Form for placing the subcontract. If the demonstration is to be contracted to only one particular vendor, the PM needs to also complete the "Justification for Sole Source Procurement" form (UCN-15918).
5. The PM submits the above package [Form 1127, SOW, Sole Source Justification (if needed)] to the sponsoring Energy Systems (ES) division/organization for approval and onward transmission to ES Procurement.
6. ES Procurement prepares and issues the Request for Proposals (RFPs) to obtain the needed services/processes/products. The PM should work with ES Procurement staff and review the RFP for completeness and accuracy.
7. The DMT reviews responses to the RFP and approves the vendor(s) to be awarded the subcontracts.
8. Procurement/Purchasing prepares and executes the contracts with the vendor organizations that are to be awarded the subcontracts.
9. The PM then deals directly with the vendor project manager.

APPENDIX C

EXAMPLE OF PROJECT DESCRIPTION

Co-Metabolic Bioreactor Demonstration at the Oak Ridge K-25 Facility

Version 4

S. E. Herbes
T. L. Donaldson
M. I. Morris
A. V. Palumbo
G. W. Strandberg

November 1990

Prepared by the
Oak Ridge National Laboratory
Oak Ridge, Tennessee 37831
operated by
MARTIN MARIETTA ENERGY SYSTEMS, INC.
for the
U. S. DEPARTMENT OF ENERGY
under contract DE-AC05-840R21400

Table of Contents

1.0 Introduction 1
1.1. Objectives of the Project 1
1.2. Scope 1
1.3. Background and Rationale 2
1.4. Project Organization 2
1.5. Preliminary Studies 3
1.5.1. Laboratory tests 3
1.5.2. Bench-scale tests 4
2.0 Site Description 5
2.1. Location 5
2.2. Seep Characteristics 5
3.0 Field Bioreactor System Design 5
4.0 Schedule 6
5.0 Site Requirements 7
5.1. Space and Location 7
5.2. Access and Security 8
5.3. Personnel Staging 8
5.4. Site Preparation 8
5.5. Utilities 8
6.0 Waste Generation and Disposal 9
6.1. Composition and Volume of Expected Waste Streams 9
6.1.1. Water 9
6.1.2. Off-gas 9
6.1.3. Sludge 9
6.2. Waste Disposal 9
7.0 Health and Safety 10
8.0 Quality Assurance 10
9.0 Permitting 10
9.1. NEPA 10
9.2. RCRA RD&D Permit 11
9.3. Site Requirements 11
10.0 Contracts and Legal Issues 11

Co-Metabolic Bioreactor Demonstration at the Oak Ridge K-25 Facility

1.0 Introduction

This demonstration project is to be conducted by Oak Ridge National Laboratory (ORNL) for the U. S. Department of Energy (DOE) Office of Technology Development. The project consists of installation and operation of two types of biological treatment systems (i. e. bioreactors), using as influent groundwater contaminated with mixed organic compounds from a seepage flow at the K-25 Plant in Oak Ridge, Tennessee. The demonstration will be conducted by ORNL staff and subcontractors, in collaboration with the K-25 Health, Safety, and Environmental Affairs (HS&EA) Division and the Environmental Restoration Division.

1.1. Objectives of the Project

The goal of the project is to demonstrate the effectiveness of two innovative bioremediation technologies, based on co-metabolic processes, to remediate groundwater contaminated by mixed organic solvents at DOE sites. The specific project objectives include:

1. Maximize the rate and extent of removal of trichloroethylene (TCE) from the influent waste stream by each of the two bioremediation technologies;

2. Evaluate the effectiveness of removal of the other organic contaminants by the two systems;

3. Evaluate the process economics of the two systems;

4. Compare the relative performance of the two systems on the basis of the above criteria.

1.2. Scope

The project consists of:

1. Completion of bioreactor design, operation, QA/QC, health/safety, and waste management plans, and acquisition of all necessary permits;

2. Optimization of microbial cultures and nutrient levels through initial laboratory tests;

3. Optimization of bioreactor design and operating conditions through testing of bench-scale units;

4. K-25 site preparation and utility hookup;

5. Modification of two existing skid-mounted bioreactor units;

6. Installation of one bioreactor unit, with associated reagent and waste containers, at the test site;

7. Operation of the unit for four months;

8. Subsequent installation of the second unit:

9. Operation of the two units simultaneously for a four-month period;

10. Shutdown of site operation, decontamination of equipment, and disposal of generated waste;

11. Analysis of data and generation of a final report;

12. Communication of results to DOE and to private vendors through technology transfer.

1.3. Background and Rationale

Groundwater contaminated with organic compounds, especially solvents such as benzene, TCE, perchloroethene (PCE), carbon tetrachloride, and chlorinated ethanes, is a problem at many DOE sites. Some of the facilities at which these groundwater contaminants have been identified include: the Feed Materials Production Center (Fernald, OH); the three Oak Ridge facilities (K-25, Y-12, and ORNL); Mound Laboratory; the Kansas City Plant; and the Savannah River Plant.

One of the most promising new technologies for removal of these contaminants from groundwater is bioremediation, both by above-ground, contained units (i. e. bioreactors) and by in situ techniques. For TCE removal, bioremediation techniques employing two general groups of microorganisms are presently being investigated: methanotrophs (methane-utilizers), and toluene-utilizers. Both are based on co-metabolic degradation, i. e. fortuitous degradation of the target contaminant (TCE) by organisms which are utilizing another compound as a growth substrate.

Application of methanotrophs to TCE degradation has been demonstrated at bench-scale by the ORNL researchers involved in this project, and at the field-scale by Battelle-Columbus Laboratories; the latter group constructed the bioreactor unit which will be employed during the initial phase of the present demonstration. Use of toluene-degrading microorganisms in TCE removal has been demonstrated in laboratory studies, initially by the U. S. Environmental Protection Agency (EPA) Gulf Breeze, Fla., Laboratory and more recently by other groups.

Work proposed during the initial three years of this project will consist of comparative demonstration of the two bioreactor types utilizing groundwater contaminated with organic compounds which emerges as a seepage flow at the K-25 Plant in Oak Ridge. The seepage flow contains TCE, PCE, benzene, toluene, chlorinated ethanes, and other volatile organic solvents at a total concentration of several parts per million.

The K-25 site, as well as other Oak Ridge sites, are on the National Priority List, and thus falls under the jurisdiction of both CERCLA and DOE/EPA Interagency Agreements. These regulations require consideration of alternatives for remediation. This demonstration project will permit evaluation of two promising bioremediation technologies, and should lead to remedial alternatives which may prove both more effective and less costly than other alternatives. More generally, the demonstration will provide valuable information on the applicability of bioremediation to a groundwater contamination problem which is a high priority at numerous DOE sites.

1.4. Project Organization

The project will consist of four tasks:

Task 1: Planning/permitting

Task 2: Methanotroph bioreactor development/demonstration

Task 3: Toluene-degrading bioreactor development/demonstration

Task 4: Closure/reporting

Principal project staff, and their organizational affiliations and primary responsibilities, are detailed below:

S. E. Herbes, Environmental Sciences Division (ESD); Project Coordinator

- Overall responsibility for project
- Preparation and implementation of project planning documents, including technical, health and safety, waste management, and QA/QC plans
- Preparation and submittal of all necessary permit and approval requests
- Reporting

T. L. Donaldson, Chemical Technology Division (CTD); Task 2 Coordinator

- Development and implementation of methanotroph bioreactor system

A. V. Palumbo (ESD); Task 3 Coordinator

- Development and implementation of toluene-degrading bioreactor system
- Culture acquisition/maintenance, laboratory screening, and nutrient optimization for both Tasks 2 and 3
- Development of biomonitoring techniques for bioreactor microbial populations for both Tasks 2 and 3

G. W. Strandberg (CTD)

- Planning and conducting of bench-scale bioreactor optimization studies for Task 2

M. I. Morris (CTD)

- Development and implementation of task/schedule tracking system
- Development and implementation of budget/cost tracking system
- Liason with K-25 site organizations

1.5. Preliminary Studies

1.5.1. Laboratory tests

The purpose of the laboratory studies is to determine what cultures and culture conditions should be tested in the bench scale bioreactors. Due to their simplicity and rapidity, use of the batch laboratory systems will allow testing of a greater number of combinations of

cultures and conditions than will be possible with the bench scale bioreactors. Thus they will serve as a screening mechanism for bench scale bioreactor tests.

A series of laboratory tests using batch cultures will be used to compare the abilities of different methane- and toluene-utilizing consortia to degrade TCE in the presence of the contaminants found at the site. Initial tests will use synthetic media and TCE, to which will be added increasingly complex mixtures of the organic contaminants found at the site. Site seep water will then be used for treatability studies. The effect of changes in culture conditions, including supplemental carbon sources and modifications of nutrient conditions, will be tested to increase the rate and extent of TCE degradation.

Toluene-degrading and methane-utilizing cultures will be obtained from a number of sources. Methane-utilizing cultures presently on hand include three cultures isolated from the Y-12 Plant, and one mixed culture isolated from the Kansas City (Mo.) Plant. Additional methane-utilizing and toluene-degrading cultures will be obtained from outside companies and universities. Attempts will also be made to isolate toluene-degrading and methane-utilizing consortia from the K-25 site water by enrichment techniques.

Specific criteria for cultures and conditions to be tested in the bench scale bioreactors include:

- Rate and extent of TCE degradation
- Stability of the microbial degradation activity with continued exposure to the site water
- Rate and extent of degradation of other compounds of regulatory concern
- Nutrient requirements (i. e. site water supplements)

1.5.2. Bench-scale tests

Six bench-scale (approx. 1-L) fixed-film bioreactors will be operated using cultures selected from laboratory tests (Section 1.5.1). Initial tests will employ methane-utilizing microorganisms (Task 2); later tests will investigate toluene-degrading microorganisms (Task 3). Reactors will be established initially using a synthetic growth medium; the site seep water will then be used to determine treatability. Physico-chemical adjustments of the influent water will be employed to optimize conditions for microbial activity and removal of organic contaminants. Specific criteria to determine which cultures will be utilized in the field demonstration will include:

- Rate and extent of TCE degradation;
- Rate and extent of degradation of other organic contaminants of regulatory concern;
- Nutrient requirements (including methane use);
- Culture stability;
- Need for site water pretreatment.

2.0 Site Description

2.1. Location

The seep which will serve as influent to the bioreactor is located adjacent to the east side of Avenue D, about 110 ft south of the center of the intersection with 9th Street, on the eastern portion of the K-25 facility (Figure 1). The seep flows from a PVC pipe imbedded at the foot of a 6-ft-high slope, and presently drains through an open concrete channel along the road into a storm drain (SD-180-04) approximately 80 ft north of the seep. The seep is located approximately 200 ft west of the boundary of the K-1070-C/D Classified Burial Ground.

2.2. Seep Characteristics

The base seep flow has appeared, by occasional observation, to be relatively constant at several gal/min during spring and summer 1990. Flow increases during and immediately following storms, and reportedly has stopped completely during extended dry periods in the past (D. Kucsmas, pers. commun.).

Chemical characteristics of the seep were determined on water samples collected from the SD-180-04 storm drain during May-June 1987. More recent analyses were conducted on samples collected directly from the seep outflow during April 1990. The 1987 analyses are summarized in Table 1; the more recent data are included as Table 2.

3.0 Field Bioreactor System Design

The bioreactor systems operate on the principle of co-metabolic degradation of TCE and associated contaminants. Microorganisms are grown in the bioreactor in the presence of oxygen and nutrients, with an added carbon source (either methane or toluene). Degradation of TCE occurs fortuitously during utilization of the organic substrate.

The field demonstration will consist of operation of two bioreactor units: one during the period of June-September 1991, and the second during the same period in 1992. The two units may be operated in parallel during the 1992 operating campaign.

Each field bioreactor will consist of:

- Piping from the seep to the bioreactor unit;
- An influent pump and associated valving and controls;
- A pretreatment filter, ion exchange unit, steam stripper, and/or other pretreatment option(s) (yet to be selected);
- The bioreactor unit itself;
- One or more tanks for the carbon substrate (either pressurized methane or a dilute aqueous toluene solution);
- Tank for the nutrient feed solution (a dilute aqueous solution of ammonium phosphate plus trace minerals);
- An off-gas scrubber (if required);

- Piping and valving for operation in recycle mode;
- Piping to return the effluent to the storm sewer;
- Safety monitoring instrumentation and process controls.

Two skid-mounted bioreactor units will be obtained from Tyndall Air Force Base for the field test. Each consists of two columns (approximately 12 in. diameter by 7 ft tall) plus associated plumbing, pumps, and control panel. The units will be shipped to ORNL for cleaning and any needed repairs. Minor modifications will be performed at this time. If preliminary studies indicate that pretreatment (filtration, water softening, etc.) is needed, equipment will be added to the skids at this time.

To protect the units from inclement weather they will be housed in a van trailer (approximately 47 ft long) at the site.

A conceptual diagram of the methanotroph bioreactor system is shown in Figure 2. A single skid-mounted bioreactor unit is shown schematically in Figure 3. The methanotroph system to be operated during the 1991 campaign will involve pumping of the seep water influent into one of the skid-mounted units, where the water will be contacted with air and methane.

The methane concentration (3% v/v in air) will be maintained below the lower explosive limit (5% v/v) to minimize hazard, and the bioreactor will be equipped with a shut-down system to protect against dangerous methane levels. Methane-air will be stored in 300 cu. ft. tanks at a pressure of approximately 3000 psig. The maximum use rate is expected to be one cylinder per day. A maximum of 5 cylinders will be connected through a manifold.

Initial tests indicate that pretreatment of the influent stream will almost certainly be required to avoid precipitation of iron in the bioreactors. If ion exchange is selected as a pretreatment procedure, an ion exchange column will be inserted just ahead of the surge and pH adjustment tank (Figure 2).

An alternate pretreatment technique which may be employed, either instead of or in parallel to ion exchange, is steam stripping. Incoming water will be routed through a conventional packed-bed steam-stripping column, in which a fraction of the water is volatilized via steam injection or superheating of the feed. Volatiles are carried overhead with the water vapor; treated water containing the non-volatile constituents would exit the bottom of the stripper. The overhead water vapor and volatiles are condensed and are input to the bioreactor for degradation of the volatile organics. Effluent from the bioreactors would be recycled into the steam stripper influent; the stripper bottoms would thus constitute the entire effluent stream. The technical feasibility of this process is still being evaluated, and a bench-scale demonstration will be conducted in late CY 1990.

4.0 Schedule

The project was initiated on April 15, 1990. Work to date has included plan and permit preparation, initial laboratory-scale screening tests, construction and startup of bench-scale bioreactor units, and initial modification of the field bioreactor unit.

Major milestone dates for the field demonstration include the following:

- Initiate site preparation 1/2/91

• Install bioreactor 1 equipment on-site	2/12/91
• Initiate bioreactor 1 startup/shakedown testing	4/11/91
• Initiate bioreactor 1 operation using site groundwater	6/03/91
• Complete initial bioreactor 1 operating campaign	9/27/91
• Install bioreactor 2 (toluene-degrading unit)	1/30/92
• Initiate bioreactor 2 startup/shakedown testing	3/31/92
• Initiate operation of bioreactor 2 using site groundwater	5/29/92
• Initiate operation of bioreactor 1 (2nd campaign)	6/02/92
• Terminate bioreactor operation	9/28/92
• Complete decommissioning	12/30/92
• End of project	12/30/92

A Gantt chart showing the phases of the project which relate to the field demonstration is shown in Figure 4. Activities have been scheduled to meet a startup date for the methanotroph bioreactor, using site groundwater, of 3 June 1991. To meet this schedule, the K-25 Readiness Review must be completed to permit initial startup/shakedown of the bioreactor by 11 April 1991.

5.0 Site Requirements

5.1. Space and Location

The two skid-mounted units with associated tanks and equipment will require protection from inclement weather, and thus will be housed in a van trailer. The trailer will require an area of approximately 12 ft x 50 ft.

The two units should be placed as close as possible to the seep. Options for locating the units include:

1. Construction of a gravel pad adjacent to the east side of Avenue D;

2. On Avenue D itself (which is presently barricaded about 100 ft south of the seep;

3. The asphalt parking lot on the west side of Avenue D adjacent to Bldg. 1098-G.

To minimize site preparation, the preferred location of the trailer containing the bioreactor units is Option 3. This location will necessitate installation of pipes across Avenue D to transport water from the seep to the bioreactors and to return the effluent to the seep discharge point.

5.2. Access and Security

The bioreactor demonstration site is within a secured area of the K-25 facility. Access to this site by personnel other than L-cleared Martin Marietta Energy Systems employees will require an escort by a cleared employee. Access requirements will be detailed in a formal Health and Safety Plan.

The site control procedure will be developed and shall be implemented to control the potential of employee exposure to hazardous substances. These requirements will be mandatory for all on-site personnel. The requirements for access will be based on 29 CFR 1910.120, Hazardous Waste Operations and Emergency Response, Final Rule, March 6, 1989. In addition, K-25 Health Physics, Industrial Hygiene, Safety, and the Plant Support and Protection Division, and others, may have special requirements concerning site access that will be incorporated into the Health and Safety Plan.

The primary requirement associated with work at the site will be proof of completion of 24 hours of initial OSHA/SARA training and up-to-date 8-hour annual refresher training. Personnel that do not have proof of completion of the above training shall be denied approval to work at the site.

5.3. Personnel Staging

Personnel staging requirements will be detailed in the formal Health and Safety Plan to be prepared for the field demonstration.

5.4. Site Preparation

Site preparation requirements will include:

- A gravel pad (approximately 12 ft by 50 ft) if the van trailer for the bioreactors is placed on the grass adjacent to Avenue D. This would not be required for the other two options.

- A dike and liner beneath the trailer may be required as secondary containment; an alternate containment design is a drip pan beneath each skid-mounted bioreactor unit within the trailer.

- A water line for the seep effluent will need to be installed across Avenue D if the units are set up in the Bldg. 1098-G parking lot.

5.5. Utilities

The project will require the following:

- Process water (maximum flow: 1 gal/min) for preparation of nutrient solutions and general equipment washing and flushing;

- Electricity (120 VAC, 30 amp);

- Compressed air (50 psig).

- Low-pressure steam (if steam stripping is selected for pretreatment).

6.0 Waste Generation and Disposal

6.1. Composition and Volume of Expected Waste Streams

6.1.1. Water

The treated bioreactor effluent (maximum flow: 1 gal/min) will contain the same volatile organics as the untreated seep water (although decreased incrementally in concentration due to microbial degradation). Added constituents will include: dissolved methane; microorganisms washed from the bioreactors (estimated final concentration: 10 mg/L of suspended microorganisms); nutrients and trace metals added to the influent to support the microbial culture and incompletely removed by the microorganisms.

Nutrients which may be added to the seep flow are listed in Table 3. Nutrients will be added as a concentrated aqueous solution and will be diluted 1:100 by the seep flow. The effluent stream will contain these constituents at concentrations no greater than those listed in Table 3.

If steam stripping is used as pretreatment, the concentrations of inorganic constituents in the seep water would be unchanged. If ion exchange is used, concentrations of iron, magnesium, and calcium will be reduced in the effluent stream.

6.1.2. Off-gas

The expected off-gas flow rate is 0.2 cfm; constituents will include methane (approximately 0.01 cfm), and trace concentrations of TCE and other VOCs.

6.1.3. Sludge

A chemical sludge, consisting of precipitated iron, may be produced if pretreatment of the influent is required. The quantity of sludge produced is unlikely to exceed 1 lb/day.

If ion exchange is employed as a pretreatment option, spent ion exchange resin will be produced. The rate of production is likely to be less than one 20-lb cartridge per month. The use of steam stripping as a pretreatment would produce no solid waste.

Biosludge will be produced periodically from flushing of the bioreactors. The total volume produced is not expected to exceed 5 cu. ft (300 lb) over the life of the demonstration.

6.2. Waste Disposal

Water treated through the bioreactor(s) will be returned directly to the storm drain at the point of removal, for disposal in the same manner as the untreated portion of the seep flow. Maximum flow will be 1 gal/min.

Initially the effluent will be stored in the effluent holding tank while analyses are conducted to ensure that added constituents (e. g., toluene) are not present at concentrations above acceptable levels. Periodic grab-sample monitoring of the effluent to the holding tank will be continued throughout the duration of the demonstration.

Off-gas will be vented directly to the atmosphere. Samples will be collected on a regular basis and analyzed for VOCs and radioactivity to ensure compliance with K-25 air permit limitations.

Each batch of waste chemical sludge or biosludge will be analyzed for radioactivity and for RCRA-hazardous constituents, by EP or TCLP extraction and analysis prior to disposal. If radioactivity exceeds K-25 guidelines, and if the waste is found to be hazardous by RCRA guidelines, it will be stored at K-25 for ultimate disposal as mixed waste. If determined to be either radioactive or hazardous, but not both, the waste will be disposed of as appropriate.

7.0 Health and Safety

The Project Description (and portions of the Technical Work Plan, if necessary) will be reviewed by the MMES Central Engineering organization to determine whether a Safety Assessment will be required. If an Assessment is required, it will be prepared by the Central Engineering organization.

A Health and Safety Plan will be prepared by the project as part of the Technical Work Plan, and will be subject to approval by both ORNL and K-25 safety committees. The plan will address:

- Training requirements for on-site personnel;
- Potential hazards involved in operation of the equipment;
- Hazardous materials to be stored or handled (e. g. methane);
- Radiation monitoring requirements.

Prior to any on-site activities a review of health, safety, and waste disposal issues, and project plans to address these issues, will be conducted by the K-25 Health and Safety Council.

8.0 Quality Assurance

A QA Plan will be prepared for the project as part of the Technical Work Plan. The Plan will encompass all aspects of the proposed work, and will be in accordance with ORNL and K-25 QA program requirements developed in response to DOE 5700.6 orders. The Plan will be reviewed and approved by appropriate staff in both ORNL and K-25 QA organizations.

9.0 Permitting

9.1. NEPA

To ensure compliance with NEPA requirements, a Project Description Memorandum (PDM) has been prepared by the ORNL NEPA coordination office. The PDM was submitted to the K-25 HS&EA Division for review, and was submitted to DOE-ORO through the ORNL NEPA coordinator's office on August 8, 1990. On August 31, 1990 a recommendation was submitted to the DOE Office of Technology Development by ORO that the a Memo-to-File be signed stating that no significant environmental impacts are expected from project activities, and that NEPA documentation has been satisfied.

9.2. RCRA RD&D Permit

The position of the ORNL Environmental Compliance office is that RCRA RD&D permit approval by the State of Tennessee is not required for this project. Information equivalent to that required in an RD&D permit application will be submitted to the Tennessee Department of Health and Environment (TDHE) to inform the regulators of the proposed demonstration.

9.3. Site Requirements

Project activities may necessitate regulatory review for compliance with existing site permits, approval of additional permits or modification of existing permits, or waiver of particular permitting requirements. The following permitting determinations are anticipated:

- Whether modification of existing K-25 permits from TDHE for storage and disposal of liquid and solid RCRA-hazardous waste will be required;

- Whether modification of existing K-25 air discharge permits from TDHE will be required.

Any necessary permit modifications or applications will be prepared by project or ORNL Environmental Compliance organization staff, after consultation with appropriate K-25 staff. Any permit modifications or applications will be submitted to the K-25 HS&EA Division for review, approval, and submittal to TDHE.

Other K-25 site work permit applications, including maintenance work requests, safety work permits, and an excavation permit (if required for site leveling), will be prepared by project staff and submitted through the appropriate K-25 organization.

10.0 Contracts and Legal Issues

The field demonstration may require use of a subcontractor to install and/or operate parts of one of the bioreactor systems. Before any subcontractor is permitted on site to work on the project, a contract or written agreement will be required to be in place that addresses:

- Operator training requirements;

- Indemnification;

- Review and implementation of a Health and Safety Plan for the subcontracted work;

- Disposition of wastes produced;

- Disposition of contaminated equipment;

- Equipment maintenance;

- Project delays caused by either contractors or MMES.

Contracts or agreements will be prepared with assistance from MMES Purchasing and the MMES Legal Department as needed.

Compound	Concentration (µg/L) Maximum	Minimum
Volatiles		
Benzene	250	230
Chloroethane	160	<10
Chloroform	5	<5
1,1-Dichloroethane	3800	2300
1,1-Dichloroethene	530	250
1,2-Dichloroethane	31	<5
Methylene chloride	8000	1900
Tetrachloroethene	50	<5
Toluene	650	440
Trans-1,2-Dichloroethene	950	670
1,1,1-Trichloroethane	4600	3000
1,1,2-Trichloroethane	24	<5
Trichloroethene	250	140
Vinyl chloride	140	<10
Semivolatiles		
2-Methylnaphthalene	44	*
4-Methylphenol	2	*
Acenaphthene	2 (est.)	<5
Anthracene	3	2
Dibenzofuran	1	*
Ethylbenzene	250	190
Fluorene	2	2
Naphthalene	48	14
Phenanthrene	2 (est.)	<5
Nonspecific Parameters		
Oil & Grease	2000	<2000
Alpha activity	4.9 pCi/L	<2 pCi/L
Beta activity	8.2 pCi/L	<2 pCi/L

Water Quality Parameters

Alkalinity	301 mg/L	254 mg/L
Chemical Oxygen Demand	52 mg/L	<5 mg/L
Conductivity	767 µmho/cm	679 µmho/cm
Dissolved oxygen	3.6 mg/L	1.5 mg/L
Hardness	321 mg/L	290 mg/L
Iron	41 mg/L	32 mg/L
pH	7.3	6.3
Temperature	17 °C	15 °C
Total Organic Carbon	24.9 mg/L	12.3 mg/L
Total Dissolved Solids	498 mg/L	380 mg/L
Total Suspended Solids	51 mg/L	16 mg/L

* Only one analysis performed.

Source: Appendix B, "RCRA Facility Investigation Plan, K-1070-C/D Classified Burial Ground, Oak Ridge Gaseous Diffusion Plant, Oak Ridge, Tennessee," Report No. K/HS-140, Revision 1, May 1989.

Chemical	Number Detected	Range of Detection Limits	Range > Detection Limit	Average Detection Limit
1,1,1-Trichloroethane	4/4	.--.	4.9--6.8	5.9
1,1,2-Trichloroethane	2/4	0.25-0.25	0.025--0.033	0.029
1,1-Dichloroethane	4/4	.--.	0.98--1	0.995
1,1-Dichloroethene	4/4	.--.	0.51--0.64	0.57
1,2-Dichloroethene (total)	4/4	.--.	0.58--0.81	0.68
1-Ethyl-2-methyl-benzene	2/2	.--.	0.33--0.33	0.33
1-Methyl Naphthalene	2/2	.--.	0.068--0.069	0.0685
1-Pentanol	2/2	.--.	0.33--0.38	0.355
1h-Indene, 1-ethylindene	1/1	.--.	0.042--0.042	0.042
1h-Indene, 2,3-Dihydro-Methyl	2/2	.--.	0.033--0.06	0.0465
2-Butanone	1/4	0.2--0.5	0.022--0.022	0.022
2-Methylnaphthalene	5/5	.--.	0.076--0.092	0.087
3-Octanone	2/2	.--.	0.025--0.038	0.0315
Acenaphthene	5/5	.--.	0.002--0.003	0.0026
Alpha Activity	1/5	1--2	1--1	1
Aluminum	3/5	0.04--0.104	0.091--0.144	0.12
Aroclor-1221	1/5	0.00057--0.0063	0.00071--0.00071	0.00071
Aroclor-1232	2/5	0.00057--0.0054	0.00091--0.0011	0.001
Aroclor-1242	2/5	0.00057--0.0025	0.00069--0.00078	0.000735
Aroclor-1248	1/5	0.00057--0.0006	0.0038--0.0038	0.0038
Barium	5/5	.--.	0.434--0.513	0.46
Benzene	4/4	.--.	1.2-1.3	1.2
Benzene 2-Ethyl-1,4-Dimethyl	1/1	.--.	0.033-0.033	0.033
Beryllium	1/5	0.001--0.001	0.001--0.001	0.001
Bromacil (ACN)	2/2	.--.	0.017--0.018	0.0175
Butane, 1,1'-oxybis(2,1-ethanediyloxy)bis	7/7	.--.	0.64--1.6	1.2
Butane, 2-Methyl-	4/4	.--.	0.27--0.45	0.345
Cadmium	1/5	0.005--0.005	0.005--0.005	0.005
Calcium	5/5	.--.	69.8--93.9	82.3
Chromium	3/5	0.01--0.01	0.014--0.03	0.02
Cobalt	2/5	0.02--0.02	0.021--0.032	0.0265
Copper	2/5	0.01--0.01	0.018--0.025	0.0215
Di-n-butylphtalate	2/5	0.011--0.012	0.003--0.004	0.0035
Diacetone Alcohol	2/2	.--.	0.022--0.028	0.025
Dibenzofuran	3/5	0.011--0.012	0.002--0.003	0.0027
Diethyl Benzene	1/1	.--.	0.024--0.024	0.024
Dimethyl Napthalene	2/2	.--.	0.015--0.032	0.0235
Ethenyl Methyl Benzene	2/2	.--.	0.05--0.08	0.065
Ethyl Dimethyl Benzene	4/4	.--.	0.024--0.031	0.027
Ethyl Methyl Benzene	7/7	.--.	0.06--0.19	0.14
Ethyl Benzene	4/4	.--.	0.31--0.43	0.37
Fluorene	5/5	.--.	0.003--0.004	0.0038
Freon 113	3/3	.--.	1.9--2.8	2.2
Freon 123	4/4	.--.	1.7--2.8	2.15
Gamma Activity	2/5	0--0	0--0	0
Heptachlor epoxide	1/5	0.000057--0.00006	0.00012--0.0012	0.00012
Hydroperoxide, 1-Methylpentyl	4/4	.--.	0.5--0.85	0.703
Iron	5/5	.--.	18.1--26.8	21.5
Lead	2/5	0.03--0.03	0.036--0.041	0.0385
Magnesium	5/5	.--.	9.78--12.9	11.3
Manganese	5/5	.--.	11.4--13.7	12.7
Methyl Methyl Ethyl Benzene	1/1	.--.	0.036--0.036	0.036

Methyl Napthalene	1/1	.--.	0.044--0.044	0.044
Methyl Propenyl Benzene	3/3	.--.	0.019--0.035	0.024
Methylcyclobutane	1/1	.--.	0.3--0.3	0.3
Methylcyclopentane	2/2	.--.	0.17--0.18	0.175
Methylene Chloride	2/4	0.1-0.1	0.16--0.46	0.31
Methylpropyl Benzene	6/6	.--.	0.014--0.038	0.026
Molybdenum	1/2	0.02--0.02	0.145--0.145	0.145
Naphthalene	5/5	.--.	0.093--0.13	0.11
Naphthalene, -Dimethyl-	3/3	.--.	0.017-0.024	0.02
Nickel	1/5	0.02--0.02	0.02--0.02	0.02
Pentane	3/3	.--.	0.31--0.55	0.44
Phenanthrene	5/5	.--.	0.004--0.005	0.0042
Potassium	4/5	1.9--1.9	2.23--2.73	2.5
Propane, 2-Methoxy-2-Methyl	2/2	.--.	0.11--0.15	0.13
Propenyl Benzene	1/1	.--.	0.077--0.077	0.077
Silicon	2/2	.--.	4.21--6.1	5.2
Silver	2/5	0.005--0.005	0.006--0.133	0.0695
Sodium	5/5	.--.	11.1--15.2	13.1
Strontium	2/2	.--.	0.053--0.105	0.079
Tetrachloroethene	2/4	0.25--0.25	0.063--0.067	0.065
Tetramethyl Benzene	4/4	.--.	0.02--0.031	0.023
Thorium	1/2	0.05--0.05	0.881--0.881	0.88
Toluene	4/4	.--.	2.7--3.1	2.9
Trichloroethene	4/4	.--.	0.33--0.43	0.385
Trimethyl Benzene	21/21	.--.	0.058--0.46	0.16
Unknown	21/21	.--.	0.017--0.055	0.033
Unknown Hydrocarbon	28/28	.--.	0.018--0.23	0.060
Uranium 238	1/2	0.2--0.2	4.44--4.44	4.44
Vanadium	3/5	0.01--0.01	0.01--0.014	0.0127
Xylene (total)	4/4	.--.	1.4--1.9	1.625
Zinc	4/5	0.01--0.01	0.01--0.068	0.042
bis(2-Ethylhexyl)phthalate	1/5	0.011--0.012	0.004--0.004	0.004
n-Propylbenzene	6/6	.--.	0.031--0.86	0.17

Source: D. Miller, personal communication to S. E. Herbes, 10/8/90. Excerpted from "Site Characterization Summary: K-1070-C/D Classified Burial Ground," Report No. K/ER-4/D1 (Draft): Appendix C (Surface Water Sampling Data). Environmental Restoration Division/K-25 Environmental Restoration Program, March 1990.

Table 2. Contaminants detected in Storm Drain SD-180-04 (new sampling point designation: SU-31) at the K-25 Facility, April 1990. All concentrations reported in units of mg/L except alpha and gamma activity (pCi/L). Underlining indicates chlorinated volatiles and aromatic compounds which may be degraded to some extent in the bioreactor.

Constituent	Nutrient mineral salts Concentration (mg/L)	Incremental Conc. Increase (mg/L)*
$MgSO_4.7H_2O$	10	0.1
$CaCl_2$	5	0.05
KNO_3	2000	20
NH_4Cl	200	2
$FeCl_3$	0.5	0.005
KH_2PO_4	2000	20
Trace elements**	10	0.1

*Incremental increase in concentration over existing seep water levels.

**HBO_3, $CoCl_2.6H_2O$, $MnSO_4$, $ZnCl_2$, $CuCl_2.2H_2O$, and $Na_2MoO_4.2H_2O$. Concentration figures given are total of all added trace elements.

Table 3. Concentrations of nutrients added to the seep water influent to bioreactors.

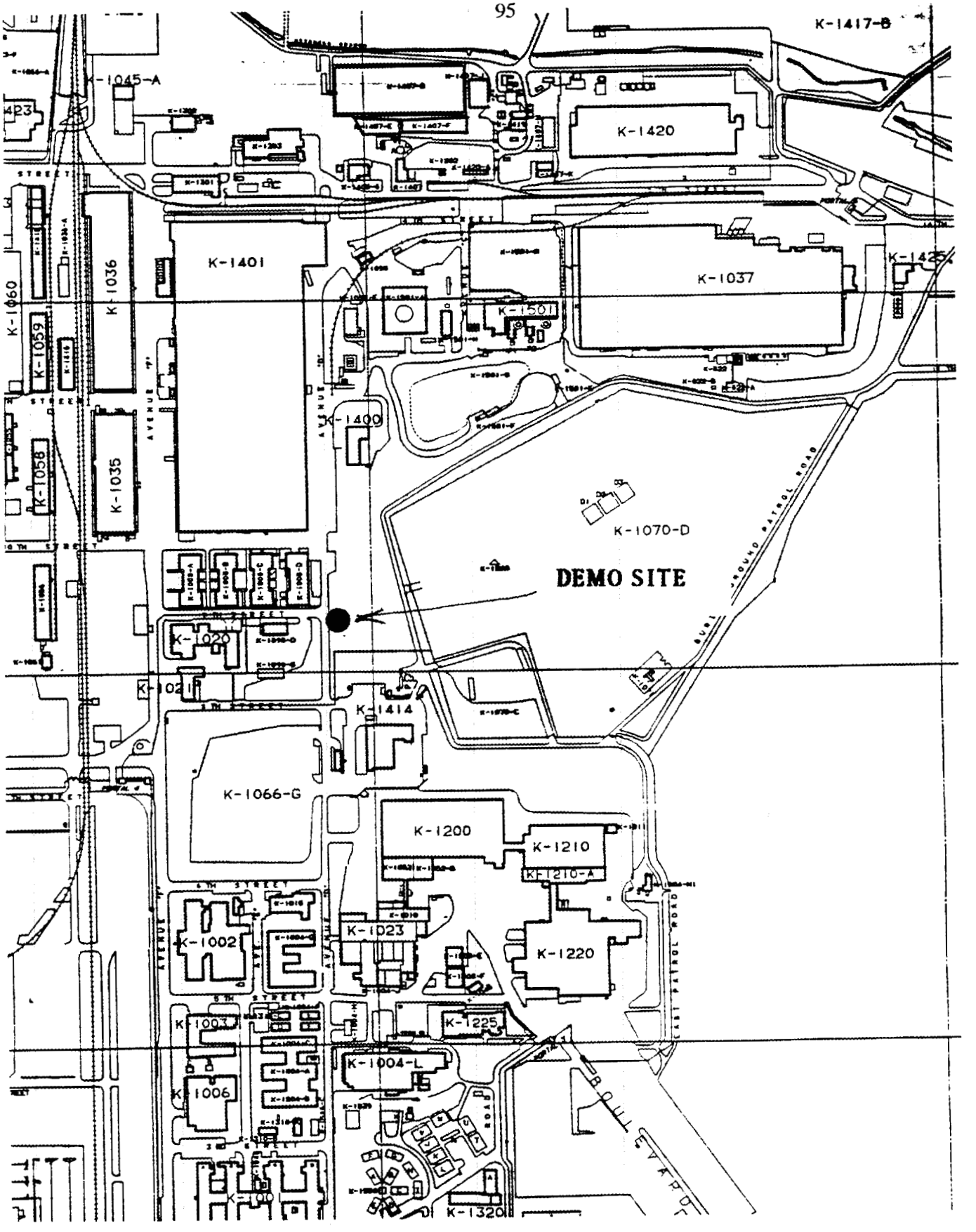

Figure 1. Site of the proposed co-metabolic bioreactor demonstration at the Oak Ridge K-25 Facility.

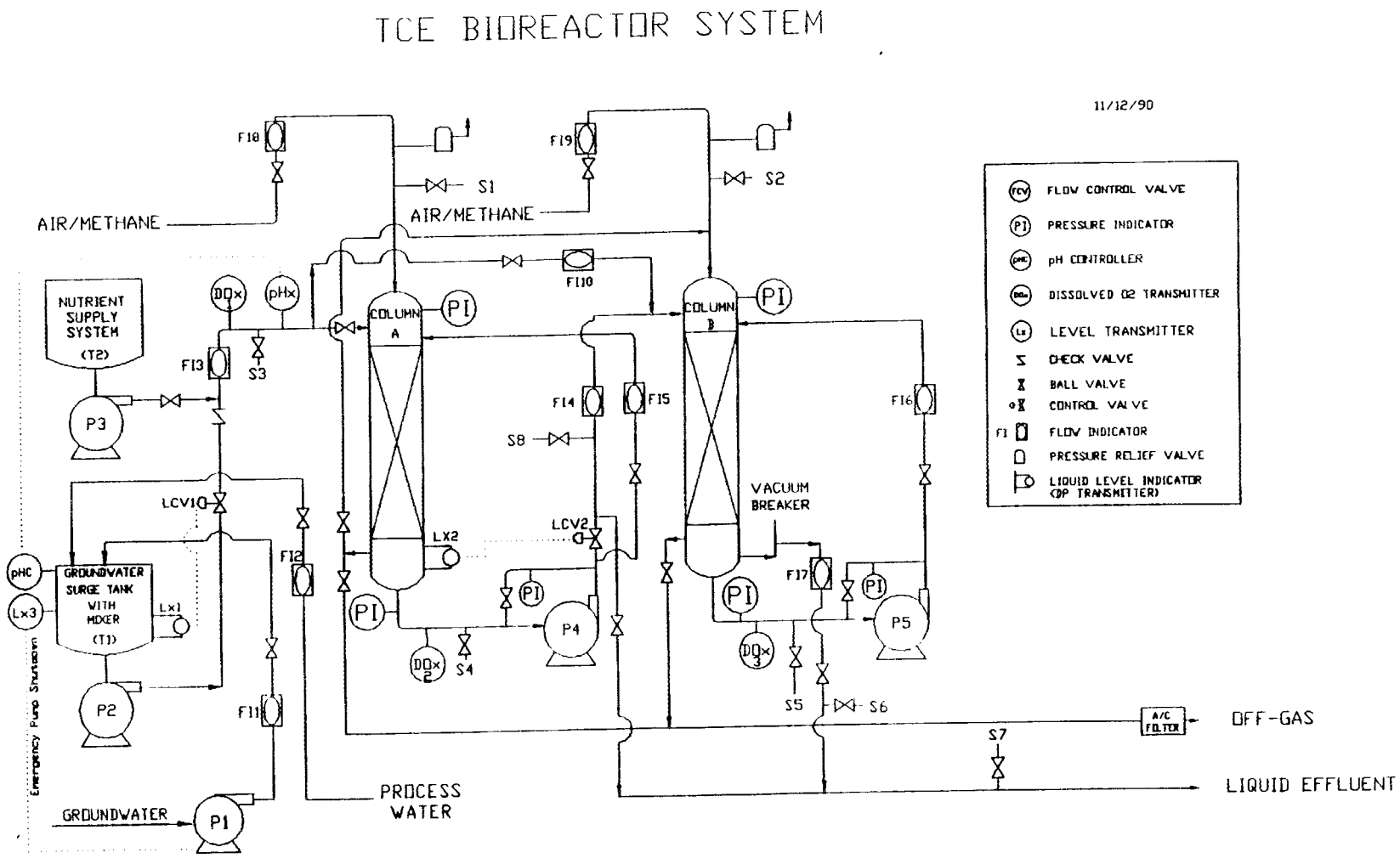

Figure 2. Schematic diagram of the methanotrophic bioreactor system.

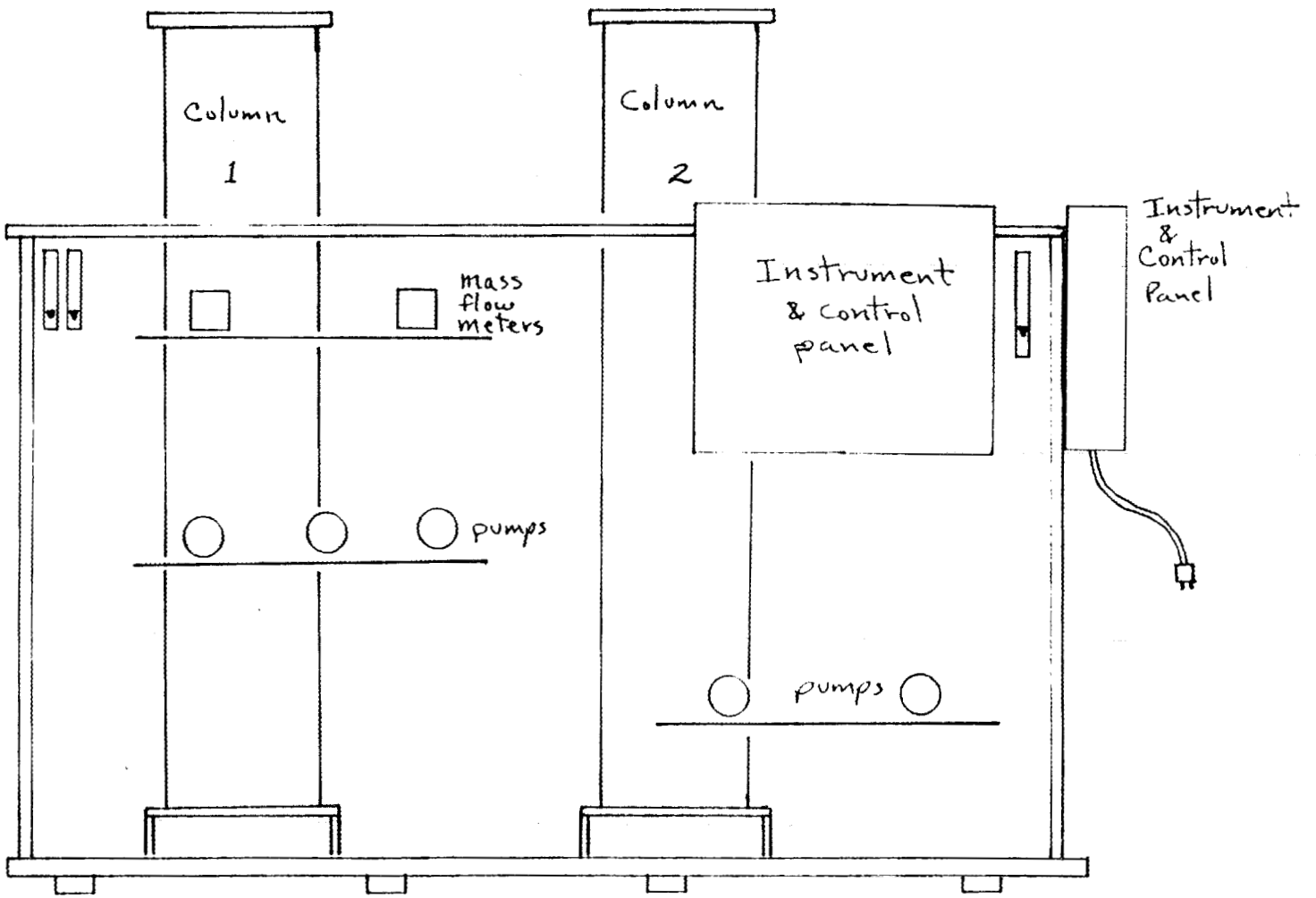

Dimensions: 6'L x 8'H x 4'W

Columns are 1'dia x 6'H of packing

BATTELLE/DOD

BIOREACTOR SKID

Figure 3. Layout of the skid-mounted methanotrophic bioreactor unit.

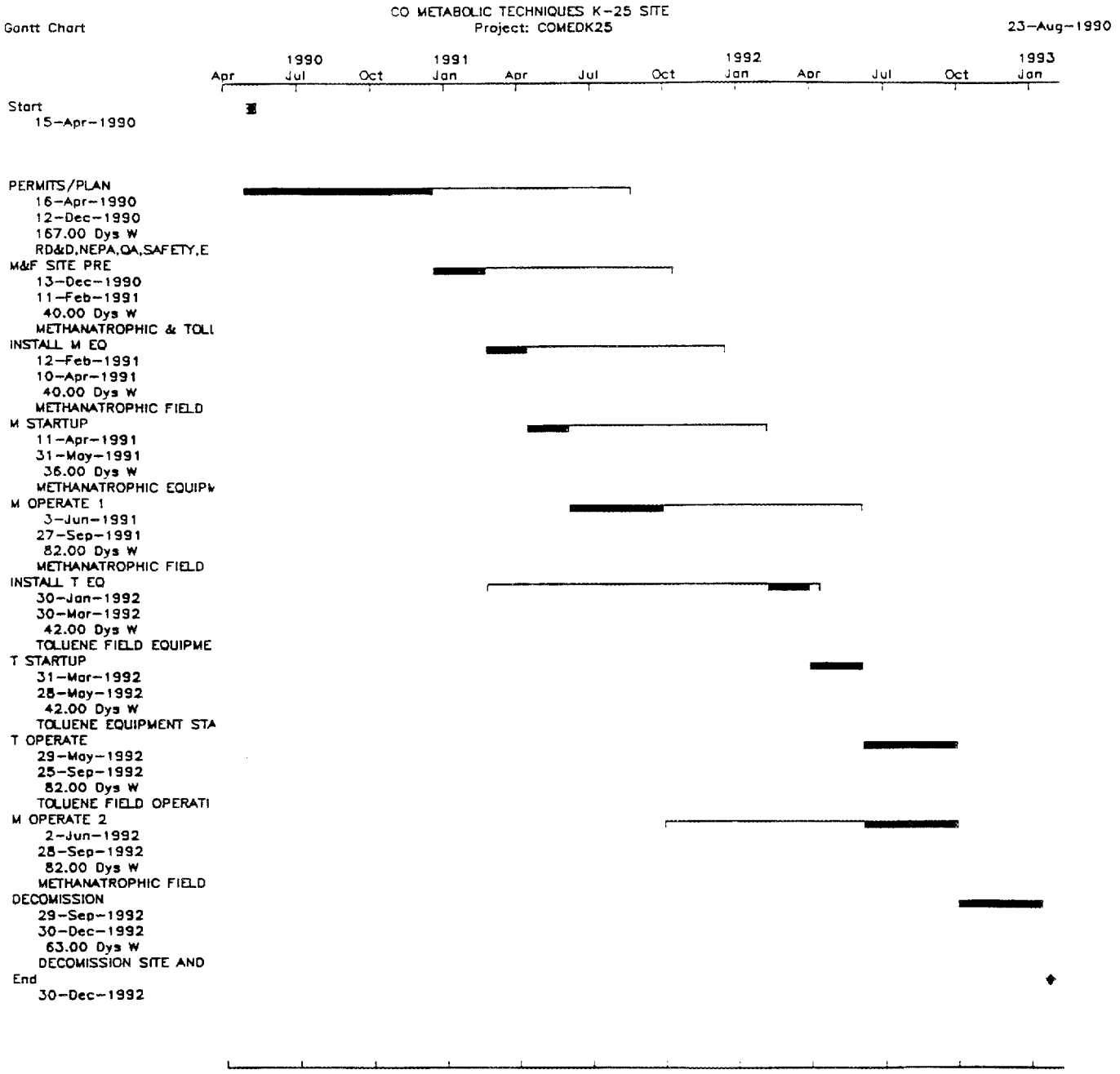

Figure 4. Gantt chart of the field demo portion of the co-metabolic bioreactor demonstration project.

APPENDIX D

EXAMPLE OF PROJECT TEST PLAN

Co-Metabolic Bioreactor Demonstration at the Oak Ridge K-25 Facility

November 1991
Revision 0

Prepared by the
OAK RIDGE NATIONAL LABORATORY
Oak Ridge, Tennessee 37831
operated by
MARTIN MARIETTA ENERGY SYSTEMS, INC.
for the
U.S. DEPARTMENT OF ENERGY
under contract DE-AC05-84OR21400

Approvals

Name	Date
A. V. Palumbo, Task 2 Leader	11/14/91
H. L. Jennings, Operating Engineer	11/14/91
T. L. Donaldson, Task 3 Leader	11/14/91
S. E. Herbes, Project Manager	11/14/91

CONTENTS

Page

LIST OF FIGURES vi

LIST OF TABLES vi

1. INTRODUCTION 1
   1.1 PROJECT OBJECTIVES 1
   1.2 PROJECT SCOPE 2
   1.3 BACKGROUND AND RATIONALE 2
   1.4 PROJECT ORGANIZATION 4
   1.5 SITE DESCRIPTION 5
      1.5.1 Location 5
      1.5.2 Seep Characteristics 6

2. TECHNOLOGY DESCRIPTION 12
   2.1 METHANOTROPHIC SYSTEM 12
   2.2 TOLUENE-DEGRADING SYSTEM 14
      2.2.1 Description of the Process 14
      2.2.2 Critical Factors 15

3. PRELIMINARY TESTS: METHANOTROPH SYSTEM 17
   3.1 CULTURE SCREENING/ASSESSMENT 17
      3.1.1 Objectives 17
      3.1.2 Evaluation Criteria 17
      3.1.3 Analytical Methods 17
      3.1.4 Laboratory Tests 18
         3.1.4.1 Culture acquisition and maintenance 18
         3.1.4.2 Culture screening 19
         3.1.4.3 Batch treatability tests 19
         3.1.4.4 Nutrient optimization tests 20
   3.2 BENCH-SCALE BIOREACTOR TESTS 21
      3.2.1 Objectives 21
      3.2.2 Evaluation Criteria 21
      3.2.3 Analytical Methods 22
      3.2.4 Reactor Operation 22

4. PRELIMINARY TESTS: TOLUENE-DEGRADING SYSTEM 25
   4.1 CULTURE SCREENING/ASSESSMENT 25
      4.1.1 Objectives 25
      4.1.2 Evaluation Criteria 25
      4.1.3 Analytical Methods 25
      4.1.4 Laboratory Tests 26
         4.1.4.1 Culture acquisition and maintenance 26

Page

4.1.4.2 Culture screening 26
4.1.4.3 Treatability tests 27
4.1.4.4 Nutrient optimization tests 27
4.2 BENCH-SCALE BIOREACTOR TESTS 28

5. DEMONSTRATION SYSTEM DESIGN 29
5.1 METHANOTROPH SYSTEM 29
5.2 TOLUENE-DEGRADING SYSTEM 30

6. SITE REQUIREMENTS 34
6.1 SPACE AND LOCATION 34
6.2 ACCESS AND SECURITY 34
6.3 PERSONNEL STAGING 34
6.4 SITE PREPARATION 34
6.5 UTILITY REQUIREMENTS 35
6.6 WASTE GENERATION AND DISPOSAL 35

7. OPERATION 36
7.1 METHANOTROPH SYSTEM 36
7.1.1 Pre-Operational Testing 36
7.1.2 Setup 36
7.1.3 Startup 37
7.1.4 Operation Run Period 38
7.2 TOLUENE-DEGRADING SYSTEM 40
7.3 DEMOBILIZATION AND DECONTAMINATION 40

8. REPORTING AND TECHNOLOGY TRANSFER 45

9. ENVIRONMENTAL COMPLIANCE 46
9.1 NATIONAL ENVIRONMENTAL POLICY ACT (NEPA) 46
9.2 RESOURCE CONSERVATION AND RECOVERY ACT (RCRA) 46
9.2.1 Bench-Scale Treatability Tests 46
9.2.2 Technology Demonstration 46
9.3 CLEAN WATER ACT 47
9.4 CLEAN AIR ACT 47

10. CONTRACTS AND LEGAL ISSUES 48

11. SCHEDULE 49

APPENDICES

A. WASTE MANAGEMENT PLAN

B. HEALTH AND SAFETY PLAN

C. QA/QC PLAN

D. SAFETY ASSESSMENT

E. SAMPLING PLAN

LIST OF FIGURES

Figure		Page
1	Location of the cometabolic bioreactor demonstration at the K-25 Site	7
2	Layout of the methanotrophic bioreactor system in the van trailer	31
3	System flowsheet for methanotrophic bioreactor system and air oxidation and steam stripper pretreatment systems	32
4	Site plan for bioreactor demonstration	33
5	Operational mode 1: steam stripper pretreatment	42
6	Operational mode 2: air oxidation pretreatment with steam stripping post-treatment	43
7	Operational mode 3: direct treatment of seep water with steam stripping post-treatment	44
8	Gannt chart of schedule for the cometabolic bioreactor demonstration project	50

LIST OF TABLES

Table		Page
1	Contaminants detected in Storm Drain SD180-04 at the K-25 Site, May-June 1987	8
2	Contaminants detected in Storm Drain SD180-04 (new sampling point designation: SU-31) at the K-25 Site, April 1990	10

1. INTRODUCTION

This demonstration project is to be conducted by Oak Ridge National Laboratory (ORNL) for the U. S. Department of Energy (DOE) Office of Technology Development. The project consists of installation and operation of two types of biological treatment systems (i. e. bioreactors), using as influent groundwater contaminated with mixed organic compounds from a seepage flow at the K-25 Plant in Oak Ridge, Tennessee. The demonstration will be conducted by ORNL staff and subcontractors, in collaboration with the K-25 Health, Safety, and Environmental Affairs (HS&EA) Division and the Environmental Restoration Division.

The purpose of this Test Plan is to plan the activities which will be components of both the preparatory activities for the demonstration and the field demonstration itself. This plan is intended to be a "living document," which will be modified and augmented during the course of the project as necessary to meet the project objectives.

1.1 PROJECT OBJECTIVES

The goal of the project is to demonstrate the effectiveness of two innovative bioremediation technologies, based on co-metabolic processes, to remediate groundwater contaminated by mixed organic solvents at DOE sites. The specific project objectives include:

1. Maximize the rate and extent of removal of trichloroethylene (TCE) from the influent waste stream by each of the two bioremediation technologies;
2. Evaluate the effectiveness of removal of the other organic contaminants by the two systems;
3. Evaluate the process economics of the two systems;
4. Compare the relative performance of the two systems on the basis of the above criteria.

1.2 PROJECT SCOPE

The project consists of:

1. Completion of bioreactor design, operation, QA/QC, health/safety, and waste management plans, and acquisition of all necessary permits;
2. Optimization of microbial cultures and nutrient levels through initial laboratory tests;
3. Optimization of bioreactor design and operating conditions through testing of bench-scale units;
4. K-25 site preparation and utility hookup;
5. Modification of two existing skid-mounted bioreactor units;
6. Installation of one bioreactor unit, with associated reagent and waste containers, at the test site;
7. Operation of the unit for four months;
8. Subsequent installation of the second unit;
9. Operation of the two units simultaneously for a four-month period;
10. Shutdown of site operation, decontamination of equipment, and disposal of generated waste;
11. Analysis of data and generation of a final report;
12. Communication of results to DOE and to private vendors through technology transfer.

1.3 BACKGROUND AND RATIONALE

Groundwater contaminated with organic compounds, especially solvents such as benzene, TCE, perchloroethene (PCE), carbon tetrachloride, and chlorinated ethanes, is a problem at many DOE sites. Some of the facilities at which these groundwater contaminants have been identified

include: the Feed Materials Production Center (Fernald, OH); the three Oak Ridge facilities (K-25, Y-12, and ORNL); Mound Laboratory; the Kansas City Plant; and the Savannah River Plant.

One of the most promising new technologies for removal of these contaminants from groundwater is bioremediation, both by above-ground, contained units (i. e. bioreactors) and by in situ techniques. For TCE removal, bioremediation techniques employing two general groups of microorganisms are presently being investigated: methanotrophs (methane-utilizers), and pseudomonads (toluene-utilizers). Both are based on co-metabolic degradation, i. e. fortuitous degradation of the target contaminant (TCE) by organisms which are utilizing another compound as a growth substrate. The energy-producing and co-metabolic reactions involved are:

1) Methanotroph growth

$$CH_4 + 2O_2 \rightarrow CO_2 _ 2H_2O$$

2) Pseudomonad growth

$$C_7H_8 + 9O_2 \rightarrow 7CO_2 + 4H_2O$$

3) Co-metabolism

$$TCE + O_2 \rightarrow \text{TCE-epoxide} \rightarrow \text{miscellaneous degradation products}$$

Application of methanotrophs to TCE degradation has been demonstrated at bench-scale by the ORNL researchers involved in this project, and at the field-scale by Battelle-Columbus Laboratories; the latter group constructed the bioreactor unit which will be employed during the initial phase of the present demonstration. Use of toluene-degrading microorganisms in TCE removal has been demonstrated in laboratory studies, initially by the U. S. Environmental Protection Agency (EPA) Gulf Breeze, Fla., Laboratory and more recently by other groups.

Work proposed during the initial three years of this project will consist of comparative demonstration of the two bioreactor types utilizing groundwater contaminated with organic compounds which emerges as a seepage flow at the K-25 Plant in Oak Ridge. The seepage flow

contains TCE, PCE, benzene, toluene, chlorinated ethanes, and other volatile organic solvents at a total concentration of several parts per million.

The K-25 site, as well as other Oak Ridge sites, are on the National Priority List, and thus falls under the jurisdiction of both CERCLA and DOE/EPA Interagency Agreements. These regulations require consideration of alternatives for remediation. This demonstration project will permit evaluation of two promising bioremediation technologies, and should lead to remedial alternatives which may prove both more effective and less costly than other alternatives. More generally, the demonstration will provide valuable information on the applicability of bioremediation to a groundwater contamination problem which is a high priority at numerous DOE sites.

1.4 PROJECT ORGANIZATION

The project will consist of four tasks:

Task 1: Planning/permitting

Task 2: Methanotroph bioreactor development/demonstration

Task 3: Toluene-degrading bioreactor development/demonstration

Task 4: Closure/reporting

Principal project staff, and their organizational affiliations and primary responsibilities, are detailed below:

S. E. Herbes, Environmental Sciences Division (ESD): Project Manager

- Overall responsibility for project
- Preparation and implementation of project planning documents, including technical, health and safety, waste management, and QA/QC plans
- Preparation and submittal of all necessary permit and approval requests
- Reporting

M. I. Morris, Chemical Technology Division (CTD), Demonstration Coordinator

- Coordination of contacts and work tasks with K-25 Site personnel
- Liaison with K-25 site organizations
- Development and implementation of task/schedule tracking system
- Development and implementation of budget/cost tracking system

T. L. Donaldson (CTD): Task 2 Coordinator

- Development and implementation of methanotroph bioreactor system

A. V. Palumbo (ESD): Task 3 Coordinator

- Development and implementation of toluene-degrading bioreactor system
- Culture acquisition/maintenance, laboratory screening, and nutrient optimization for both Tasks 2 and 3
- Development of biomonitoring techniques for bioreactor microbial populations for both Tasks 2 and 3

H. L. Jennings (CTD)

- Installation, testing, and operation of methanotroph bioreactor system

1.5 SITE DESCRIPTION

1.5.1 Location

The seep which will serve as influent to the bioreactor is located adjacent to the east side of Avenue D, about 110 ft south of the center of the intersection with 9th Street, on the eastern portion of the K-25 facility (Figure 1). The seep flows from a PVC pipe imbedded at the foot of a 6-ft-high slope, and presently drains through an open concrete channel along the road into a storm drain (SD-180-04) approximately 80 ft north of the seep. The seep is located approximately 200 ft west of the boundary of the K-1070-C/D Classified Burial Ground.

1.5.2 Seep Characteristics

The base seep flow has appeared, by occasional observation, to be relatively constant at several gal/min during spring and summer 1990. Flow increases during and immediately following storms, and reportedly has stopped completely during extended dry periods in the past (D. Kucsmas, pers. commun.).

Chemical characteristics of the seep were determined on water samples collected from the SD-180-04 storm drain during May-June 1987. More recent analyses were conducted on samples collected directly from the seep outflow during April 1990. The 1987 analyses are summarized in Table 1; the more recent data are included as Table 2.

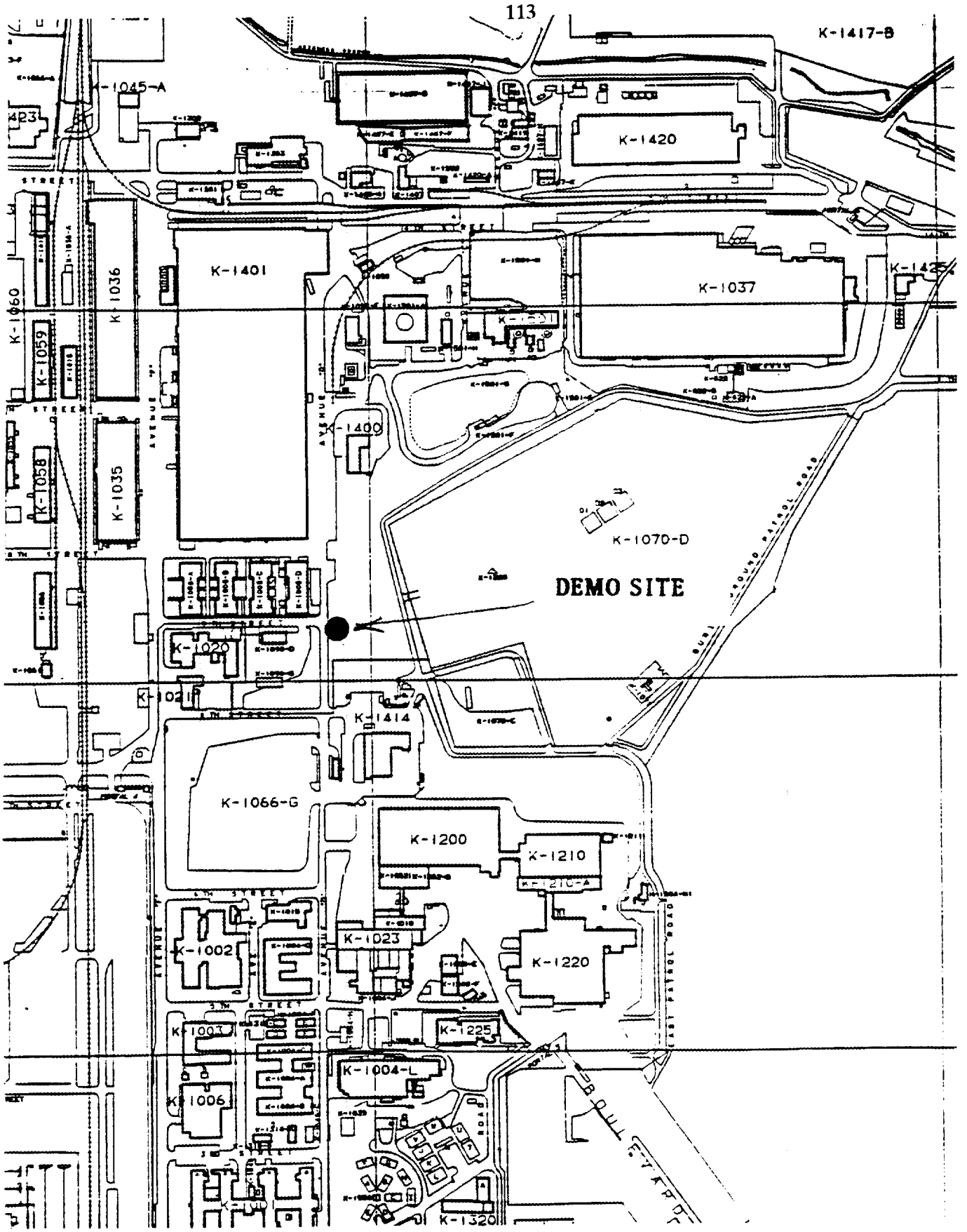

Figure 1. Site of the proposed co-metabolic bioreactor demonstration at the Oak Ridge K-25 Facility.

Table 1. Contaminants detected in Storm Drain SD-180-04 at the K-25 Facility May-June 1987

Compound	Concentration (µg/L) Maximum	Minimum
Volatiles		
Benzene	250	230
Chloroethane	160	<10
Chloroform	5	<5
1,1-Dichloroethane	3800	2300
1,1-Dichloroethene	530	250
1,2-Dichloroethane	31	<5
Methylene chloride	8000	1900
Tetrachloroethene	50	<5
Toluene	650	440
Trans-1,2-Dichloroethene	950	670
1,1,1-Trichloroethane	4600	3000
1,1,2-Trichloroethane	24	<5
Trichloroethene	250	140
Vinyl chloride	140	<10
Semivolatiles		
2-Methylnaphthalene	44	*
4-Methylphenol	2	*
Acenaphthene	2 (est.)	<5
Anthracene	3	2
Dibenzofuran	1	*
Ethylbenzene	250	190
Fluorene	2	2
Naphthalene	48	14
Phenanthrene	2 (est.)	<5
Nonspecific Parameters		
Oil & Grease	2000	<2000
Alpha activity	4.9 pCi/L	<2 pCi/L
Beta activity	8.2 pCi/L	<2 pCi/L

Table 1. (continued)

Water Quality Parameters

Alkalinity	301 mg/L	254 mg/L
Chemical Oxygen Demand	52 mg/L	<5 mg/L
Conductivity	767 µmho/cm	679 µmho/cm
Dissolved oxygen	3.6 mg/L	1.5 mg/L
Hardness	321 mg/L	290 mg/L
Iron	41 mg/L	32 mg/L
pH	7.3	6.3
Temperature	17 °C	15 °C
Total Organic Carbon	24.9 mg/L	12.3 mg/L
Total Dissolved Solids	498 mg/L	380 mg/L
Total Suspended Solids	51 mg/L	16 mg/L

* Only one analysis performed.

Source: Appendix B, "RCRA Facility Investigation Plan, K-1070-C/D Classified Burial Ground, Oak Ridge Gaseous Diffusion Plant, Oak Ridge, Tennessee," Report No. K/HS-140, Revision 1, May 1989.

Table 2. Contaminants detected in Storm Drain SD-180-04 (new sampling point designation: (SU-31) at the K-25 Facility, April 1990. All concentrations reported in units of mg/L except alpha and gamma activity (pCi/L). Underlining indictes chlorinated volatiles and aromatic compounds which may be degraded to some extent in the bioreactor.

Chemical	Number Detected	Range of Detection Limits	Range > Detection Limit	Average Detection Limit
1,1,1-Trichloroethane	4/4	.--.	4.9--6.8	5.9
1,1,2-Trichloroethane	2/4	0.25-0.25	0.025--0.033	0.029
1,1-Dichloroethane	4/4	.--.	0.98--1	0.995
1,1-Dichloroethene	4/4	.--.	0.51--0.64	0.57
1,2-Dichloroethene (total)	4/4	.--.	0.58--0.81	0.68
1-Ethyl-2-methyl-benzene	2/2	.--.	0.33--0.33	0.33
1-Methyl Naphthalene	2/2	.--.	0.068--0.069	0.0685
1-Pentanol	2/2	.--.	0.33--0.38	0.355
1h-Indene, 1-ethylindene	1/1	.--.	0.042--0.042	0.042
1h-Indene, 2,3-Dihydro-Methyl	2/2	.--.	0.033--0.06	0.0465
2-Butanone	1/4	0.2--0.5	0.022--0.022	0.022
2-Methylnaphthalene	5/5	.--.	0.076--0.092	0.087
3-Octanone	2/2	.--.	0.025--0.038	0.0315
Acenaphthene	5/5	.--.	0.002--0.003	0.0026
Alpha Activity	1/5	1--2	1--1	1
Aluminum	3/5	0.04--0.104	0.091--0.144	0.12
Aroclor-1221	1/5	0.00057--0.0063	0.00071--0.00071	0.00071
Aroclor-1232	2/5	0.00057--0.0054	0.00091--0.0011	0.001
Aroclor-1242	2/5	0.00057--0.0025	0.00069--0.00078	0.000735
Aroclor-1248	1/5	0.00057--0.0006	0.0038--0.0038	0.0038
Barium	5/5	.--.	0.434--0.513	0.46
Benzene	4/4	.--.	1.2-1.3	1.2
Benzene 2-Ethyl-1,4-Dimethyl	1/1	.--.	0.033-0.033	0.033
Beryllium	1/5	0.001--0.001	0.001--0.001	0.001
Bromacil (ACN)	2/2	.--.	0.017--0.018	0.0175
Butane, 1,1'-oxybis(2,1-ethanediyloxy)bis	7/7	.--.	0.64--1.6	1.2
Butane, 2-Methyl-	4/4	.--.	0.27--0.45	0.345
Cadmium	1/5	0.005--0.005	0.005--0.005	0.005
Calcium	5/5	.--.	69.8--93.9	82.3
Chromium	3/5	0.01--0.01	0.014--0.03	0.02
Cobalt	2/5	0.02--0.02	0.021--0.032	0.0265
Copper	2/5	0.01--0.01	0.018--0.025	0.0215
Di-n-butylphtalate	2/5	0.011--0.012	0.003--0.004	0.0035
Diacetone Alcohol	2/2	.--.	0.022--0.028	0.025
Dibenzofuran	3/5	0.011--0.012	0.002--0.003	0.0027
Diethyl Benzene	1/1	.--.	0.024--0.024	0.024
Dimethyl Napthalene	2/2	.--.	0.015--0.032	0.0235
Ethenyl Methyl Benzene	2/2	.--.	0.05--0.08	0.065
Ethyl Dimethyl Benzene	4/4	.--.	0.024--0.031	0.027
Ethyl Methyl Benzene	7/7	.--.	0.06--0.19	0.14
Ethyl Benzene	4/4	.--.	0.31--0.43	0.37
Fluorene	5/5	.--.	0.003--0.004	0.0038

Freon 113	3/3	.--.	1.9--2.8	2.2
Freon 123	4/4	.--.	1.7--2.8	2.15
Gamma Activity	2/5	0--0	0--0	0
Heptachlor epoxide	1/5	0.000057--0.00006	0.00012--0.0012	0.00012
Hydroperoxide, 1-Methylpentyl	4/4	.--.	0.5--0.85	0.703
Iron	5/5	.--.	18.1--26.8	21.5
Lead	2/5	0.03--0.03	0.036--0.041	0.0385
Magnesium	5/5	.--.	9.78--12.9	11.3
Manganese	5/5	.--.	11.4--13.7	12.7
Methyl Methyl Ethyl Benzene	1/1	.--.	0.036--0.036	0.036
Methyl Napthalene	1/1	.--.	0.044--0.044	0.044
Methyl Propenyl Benzene	3/3	.--.	0.019--0.035	0.024
Methylcyclobutane	1/1	.--.	0.3--0.3	0.3
Methylcyclopentane	2/2	.--.	0.17--0.18	0.175
Methylene Chloride	2/4	0.1-0.1	0.16--0.46	0.31
Methylpropyl Benzene	6/6	.--.	0.014--0.038	0.026
Molybdenum	1/2	0.02--0.02	0.145--0.145	0.145
Naphthalene	5/5	.--.	0.093--0.13	0.11
Naphthalene, -Dimethyl-	3/3	.--.	0.017-0.024	0.02
Nickel	1/5	0.02--0.02	0.02--0.02	0.02
Pentane	3/3	.--.	0.31--0.55	0.44
Phenanthrene	5/5	.--.	0.004--0.005	0.0042
Potassium	4/5	1.9--1.9	2.23--2.73	2.5
Propane, 2-Methoxy-2-Methyl	2/2	.--.	0.11--0.15	0.13
Propenyl Benzene	1/1	.--.	0.077--0.077	0.077
Silicon	2/2	.--.	4.21--6.1	5.2
Silver	2/5	0.005--0.005	0.006--0.133	0.0695
Sodium	5/5	.--.	11.1--15.2	13.1
Strontium	2/2	.--.	0.053--0.105	0.079
Tetrachloroethene	2/4	0.25--0.25	0.063--0.067	0.065
Tetramethyl Benzene	4/4	.--.	0.02--0.031	0.023
Thorium	1/2	0.05--0.05	0.881--0.881	0.88
Toluene	4/4	.--.	2.7--3.1	2.9
Trichloroethene	4/4	.--.	0.33--0.43	0.385
Trimethyl Benzene	21/21	.--.	0.058--0.46	0.16
Unknown	21/21	.--.	0.017--0.055	0.033
Unknown Hydrocarbon	28/28	.--.	0.018--0.23	0.060
Uranium 238	1/2	0.2--0.2	4.44--4.44	4.44
Vanadium	3/5	0.01--0.01	0.01--0.014	0.0127
Xylene (total)	4/4	.--.	1.4--1.9	1.625
Zinc	4/5	0.01--0.01	0.01--0.068	0.042
bis(2-Ethylhexyl)phthalate	1/5	0.011--0.012	0.004--0.004	0.004
n-Propylbenzene	6/6	.--.	0.031--0.86	0.17

Source: D. Miller, personal communication to S. E. Herbes, 10/8/90. Excerpted from "Site Characterization Summary: K-1070-C/D Classified Burial Ground," Report No. K/ER-4/D1 (Draft): Appendix C (Surface Water Sampling Data). Environmental Restoration Division/K-25 Environmental Restoration Program, March 1990.

2. TECHNOLOGY DESCRIPTION

2.1 METHANOTROPHIC SYSTEM

This technology is based on the biological degradation of chlorinated aliphatics by methane-utilizing microorganisms (methanotrophs). These microorganisms oxidize methane to generate energy for life functions. A key enzyme in the metabolism of methane is called methane monooxygenase. In addition to its role in methane metabolism, it is sufficiently non-specific that it also catalyzes the epoxidation of chlorinated alkenes such as trichloroethylene (TCE). This phenomenon of simultaneous transformation of secondary substrates is termed "cometabolism." It appears that most methanotrophic microorganisms have the capability for cometabolism of chlorinated alkenes. Mixed cultures containing other types of microorganisms aid in the overall destruction of the substrates.

Formation of the epoxide appears to be the rate-limiting step; further hydrolysis and biodegradation occur relatively rapidly. Tests with radiolabeled TCE have shown that the majority of the TCE carbon is mineralized to carbon dioxide and a small amount is incorporated into cell mass. Although intermediate degradation products are surely produced, they appear to be below analytical detection limits. A variety of chlorinated alkenes can be degraded by this mechanism. A notable exception appears to be tetrachloroethylene; it is believed to be highly resistant to oxidation, but can be biodegraded anaerobically.

The process technology to be demonstrated in this project is based on the trickle-bed bioreactor concept. Mixed cultures containing methanotrophs and other microorganisms are induced to grown in biofilms on the surface of a support matrix such as pall rings in a columnar bioreactor. The contaminated water to be treated is applied to the top of the column and then trickles down over the surfaces of the biofilms. This action provides intimate contact of the water with the

microorganisms. Air (oxygen) and methane are also provided to the continuous gas phase in the trickle-bed bioreactor to support the methanotrophs. Treated water and off-gas are removed from the bottom of the bioreactor.

In our laboratory-scale studies this bioreactor concept has been shown to degrade 1 ppm or greater TCE to less than 50 ppb when the liquid residence time is several hours. Fifty percent degradation is achievable in about one hour. Work by other investigators has shown reduction of TCE to below detection limits after several days.

Laboratory and bench studies have identified a number of important variables and issues relevant to successful operation of a pilot-scale demonstration of this technology. These issues are discussed below.

- TCE concentrations in excess of 100 ppm are toxic/inhibitory to the microbial cultures. However, this is not a practical problem because the TCE in the K-25 Site seep water is <1 ppm.
- Studies to date have shown that effluent concentrations of 50 ppb can be achieved in several hours. Further reductions require substantially longer residence times. The explanation is not yet known.
- Several metals, notably manganese and copper, affect the bioactivity of the microbial cultures. While optimal conditions can be identified in laboratory studies, it is not clear yet if control of these trace metals will be necessary in field operations.
- Dissolved iron in excess of 1 ppm may cause problems because of formation and precipitation of oxides on the biofilms, which will probably reduce the accessibility of the water to the biofilms. Biodegradation rates will thus decrease. However, some natural shedding and regeneration will occur, perhaps

enhanced by the deposition of iron oxides. This behavior is not understood. A similar pilot study by Battelle employed pretreatment (deionization/water softening) to remove minerals.

- Not all microbial cultures form satisfactory biofilms. It will be important to inoculate the bioreactor with a culture that does form stable films. Laboratory studies have shown that the films persist for months; verification of this ruggedness will be a significant aspect of the process demonstration.

2.2 TOLUENE-DEGRADING SYSTEM

The toluene degrading system will use above ground bioreactors containing mixed cultures of toluene oxidizing bacteria to degrade TCE in the K-25 site water. The water will be diverted from the seep into the bioreactor system where concentration of TCE and related compounds will be reduced. The treated water will then be released to the storm drain or diverted to the K-25 treatment facility. The technology for treatment by toluene-degrading bacteria has not been demonstrated in a bioreactor thus the time to the site demonstration will be longer than that planned for the methanotroph system.

2.2.1 Description of the Process

The basic technology of the toluene-degrading system is very similar to that of the methanotroph system in that both are based on the co-metabolic degradation of TCE by non-specific oxygenase enzymes. Work on the promotion of TCE degradation toluene degraders by a number of investigators has indicated that the co-metabolic degradation of TCE by pseudomonads can be stimulated by aromatic compounds. One strain has been shown to degrade a large number of organic contaminants either by direct oxidation and utilization as a carbon and energy source or by

co-metabolism. Reports in the literature indicate that this isolate, when grown on aromatic compounds (e.g. toluene), is able to co-metabolize chlorinated alkenes such as trichloroethylene. The bacteria will grown on and degrade a number of aromatic compounds including phenol, toluene, o-cresol, and m-cresol. Other pseudomonas also have this co-metabolic capacity and have been shown to rapidly degrade TCE and other chlorinated ethylenes such as cis and trans-1,2-Dichloroethylene and 1,1-Dichloroethylene. This type of culture should be ideal for situations such as those at the proposed site where chlorinated alkenes are mixed with aromatics such as benzene and toluene since the bacteria can use the aromatics as growth substrates while co-metabolizing the chlorinated compounds.

2.2.2 Critical Factors

The critical factors for the toluene-degrading system are similar to those for the methanotroph system with the possible exception of the problems with delivery of the source of the reducing power, toluene and related compounds in this case and methane in the methanotroph system. The critical factors that must be investigated in the preliminary tests in order to ensure successful demonstration of the technology include the following:

- Selection of the cultures based on the following criteria
  - Maximum rate of TCE degradation
  - Maximum extent of TCE degradation
  - Stability of the culture
  - Minimum effect of the other contaminants on the above
  - Degradation of other contaminants present in the site water that are also of regulatory concern.

- Establishment of culture conditions, to meet above criteria, including:
  - Determination of appropriate co-metabolizable substrate and appropriate concentrations
  - Determination of appropriate inorganic nutrient levels (including trace metals)
- Optimization of design of bioreactor to:
  - Minimize possible competitive inhibition with the growth substrate
  - Maximize degradation rates, thus minimizing system design and cost
  - Allow for ease of maintenance and cleaning
  - Utilize reagents efficiently

3. PRELIMINARY TESTS: METHANOTROPH SYSTEM

3.1 CULTURE SCREENING/ASSESSMENT

3.1.1 Objectives

The objectives of the culture screening and assessment are to provide cultures for testing in the bench scale bioreactors that have the best chance of meeting the over all goals of the project. The critical questions to be addressed are:

1) What consortia if any has the greatest capacity (rates and extents) for TCE degradation?
2) What consortia exhibits the greatest tolerance to the other organics in the site water?
3) What consortia also degrades the other organics in the site water?

3.1.2 Evaluation Criteria

The evaluation criteria are essentially the same as those listed for the methanotrophs. The most important criteria is the ability of the consortia to reduce concentrations of TCE to the lowest extent possible. The "best" culture would be the one that achieved the fastest decrease to drinking water standards. Cultures will be passed on for bioreactor tests if they achieve either rapid degradation or complete degradation. The second criteria will be the ability of the culture to maintain a high degree of degradative activity in the presence of the mixed organics in the site water. The third criteria will be the ability of the consortia to degrade the other organics in the site water particularly those that are of regulatory concern.

3.1.3 Analytical Methods

Batch experiments will be run to compare the performance of the consortia in reference to the evaluation criteria. TCE and related compounds will be analyzed on a gas chromatographic (GC)

system and in selected experiments the fate of the TCE will be followed by radiolabel techniques. Concentrations of oxygen and methane are also determined using GC techniques. Microbial biomass is determined by direct counts of the bacteria or by protein measurement. Detailed procedures have been summarized in the Technology Status Report.

3.1.4 Laboratory Tests

The proposed work consists of a series of laboratory tests using batch cultures to compare the abilities of different methane utilizing consortia to degrade TCE in the presence of the contaminants found at the site and to determine what culture conditions result in the highest rates and greatest extent of TCE degradation. Initial tests will use synthetic media and TCE to which will be added increasingly complex mixtures of the organic contaminants found at the site. Contaminants to be included are those found at highest concentration in the seep water (see below) including methylene chloride, 1,1,1,-Trichloroethane, and 1,1,-Dichloroethane and the effect of these organics will be test over the range reported for the seep water. Site seep water will then be used for treatability studies.

3.1.4.1 Culture acquisition and maintenance

Cultures have been and are being obtained by enrichment of contaminated water from a number of DOE sites and from other investigators at universities and at commercial firms. Methane-utilizing cultures on hand include three cultures isolated from Y-12 and one mixed culture isolated from the DOE Kansas City Plant. Attempts will also be made to isolate additional methane-utilizing consortia from the site water by enrichment techniques.

Pure cultures of methanotrophs will be added to specific consortia to determine if the presence of these organisms increases TCE degradation. Pure cultures being maintained include both type I and type II methanotrophs and represent the most commonly used methanotrophic cultures

for examination of TCE degradation (OB3b) and the first pure culture that was demonstrated to be able to degrade TCE (46-1).

3.1.4.2 Culture screening

The ability of the consortia to degrade TCE at concentrations found at the site, 140 to 250 μg/L, will be compared in experiments with synthetic media. The effects of the other contaminants found at the site on the degradation of TCE will be assessed in a series of experiments where mixtures of increasing complexity are added to the synthetic media. The effects of added toluene will be examined first since it is a growth substrate for the toluene degraders whose capabilities will be compared to the methanotrophs (Section 4.0). After the effects of the toluene on TCE degradation by the various mixed are assessed. The effects of toluene + methylene chloride (the most abundant contaminant) will be determined. The effects of the other contaminants found at high concentrations (e.g. 1,1,1,-Trichloroethane and 1,1,-Dichloroethane) and those that are known to effect TCE degradation (e.g. PCE) . The concentrations of contaminants added will be determined based on the maximum and minimum concentrations reported in the site water. The cultures which perform best in these tests (according to the criteria defined in 3.1.2) will be used in the bench scale bioreactor studies (3.2).

3.1.4.3 Batch treatability tests

Batch treatability tests integrate the effects of all of the components present in the site water on the TCE degradation activity exhibited by the cultures. The culture screening can help determine which cultures are most likely do well in the site water and can determine which, if any, of the components of the site water have a negative effect on TCE degradation but the treatability tests are the critical component. These experiments will compare the TCE degradation of the consortia at

various dilutions (100 to 10 % site water) of the site water in mineral salts media. These experiments will be conducted using radiolabeled TCE, or in selected experiments GC techniques will be employed to measure degradation of a variety of the contaminants. Choice of analytical technique will be based on the object of the experiment (e.g. if degradation of chlorinated compounds other than TCE needs to be measured GC techniques must be used). The results of these tests and the culture screening tests (3.1.4.2) will be used to determine if site water will need to be diluted or pretreated prior to use in the bioreactors. The results of these experiments will be verified in the bench scale bioreactor studies (3.2).

3.1.4.4 Nutrient optimization tests

The effect of changes in culture conditions will be tested with the aim of increasing the rate and extent of degradation. For example, the effect of addition of formate, as a supplemental carbon and energy source, on the rate and extent of TCE degradation by the methane utilizing cultures will be examined as will the major nutrient requirements. The effect of variations in this composition including reduction in the phosphorous concentration, which is used both as a nutrient source and a pH buffer, elimination of the ammonium, elimination of the copper and addition of formate will be tested.

The composition of the synthetic media will be compared to chemical analysis of the site water to determine what nutrients need to be added. The effect of any inorganic compounds present at higher concentrations than those found in the synthetic media on TCE degradation will be determined in experiments with mineral salts medium modified by addition of the inorganic compound in question to concentrations found in the site water. These studies will help determine what inorganic nutrients need to be added to the site water and will also determine if the presence of any inorganics in the site water are likely to inhibit or reduce TCE degradation. The information from

these tests will be used to determine optimum nutrient feeds for the bench scale bioreactor systems (3.2).

3.2 BENCH-SCALE BIOREACTOR TESTS

3.2.1 Objectives

The objectives of the bench-scale bioreactor tests are to evaluate several methanotrophic cultures in a bench-scale bioreactor mode and to determine the effects of various parameters deemed significant from shake-flask studies. Six cultures will be selected from initial laboratory studies, inoculated into small fixed-film bioreactor systems, and their behavior evaluated using both synthetic and pretreated (to remove iron) real wastes. Based in part on this evaluation, one of the cultures will be selected for use in the field-scale demonstration reactors.

3.2.2 Evaluation Criteria

Specific criteria are to be used in evaluating the cultures. Although many of these criteria will have already been met in selecting cultures from the laboratory experiments (see 3.1.1), changing to a bioreactor environment could induce and/or reveal positive or negative characteristics.

Certain characteristics of the culture are of importance. It must be able to establish and maintain itself as a biofilm within the reactor. Another characteristic of interest is the culture's ability to grow and maintain TCE degrading activity with minimal close attention to adjustable environmental parameters (e.g. pH, nutrient concentration). The culture must, of course, be able to maintain viability and TCE degrading activity with the actual site water. This possibly entails resistance to the effects of heavy metals and certainly, to other hazardous organic compounds present in the waste stream.

With regard to the cultures degradative capabilities the primary criteria for selection are more concrete, namely the rate of TCE degradation, the minimum TCE concentration achievable, and whether other hazardous compounds are concurrently degraded (3.1.2).

Degradation rates will be determined by analysis (see below) of the component of interest in the influent (liquid) and effluent (liquid and off-gas) streams. The degradation rate will be calculated as:

$$I_L - E_L - E_G$$

where I_L = TCE in influent liquid (ug/hr); E_L = TCE in effluent liquid (ug/hr); and E_G = TCE in effluent gas (ug/hr).

3.2.3 Analytical Methods

The compounds of interest (TCE and other hazardous organics) will be monitored by gas chromatography. The gas chromatograph to be used is a Hewlett-Packard (HP) Model 5890A equipped with both an electron capture detector (for halogenated compounds) and a flame-ionization detector (for other VOC's). The response of the detectors will be integrated and plotted with a HP Model 3396A recording integrator. The data will also be stored on a HP Model 9114B disk storage system for subsequent retrieval and/or manipulation. An HP Model 7673A autosampler will be used for routine analysis of hexane extracted compounds. The column used for separation will be a Megabore DB+1 capillary column (J&W Scientific Corp). Additional VOCs will be monitored by GC as feasible.

3.2.4 Reactor Operation

The bench-scale bioreactors consist of 5 cm by 0.6 m heavy wall glass tubes. The bottom is sealed by a stainless steel plate with a Viton rubber gasket. The plate and gasket are held in place

using a bolted flange. The plate has a single 0.9 cm outlet port for both liquid and gas effluent. Provision is made for influent (by redirecting influent stream through a tee in line) and effluent liquid streams (from bottom drain line). Off-gas sampling will be accomplished through a septum-sealed tee in the drain line.

The columns will be packed with 1.6 cm polyethylene pall rings which will serve as the biofilm support. These have proved successful in earlier studies.

The influent waste (synthetic and real) will be introduced to the reactor through two stainless steel tubes (1.6 mm i.d.). The liquid will be allowed to enter the reactor dropwise and fall upon a stainless steel screen placed over the packing. The screen will split the drops and more evenly distribute the liquid over the packing.

When synthetic waste is fed to the reactors, the nutrient mineral salts (see 3.1.1.4) and TCE will be prepared in a 20-fold concentrated aqueous solution. This solution will be pumped (using a peristaltic pump with Viton tubing) to a "sealed" mixing vessel where it will be diluted with process water and forced by the internal pressure in the mixing vessel into the bioreactor. The flow rates of the two liquid streams entering the mixing vessel will determine the flow rate (generally 4-6 mL/min) of the influent stream to the bioreactor. The actual waste will be introduced to the reactor in a similar manner except that provision will be made to introduce nutrients deemed necessary from laboratory studies and/or to dilute it with process water if required.

The primary substrate for the microorganisms, methane, will be introduced at the top of the reactor. It will be supplied as a premixed preparation of 3% (v/v) methane in air (Matheson Gas Products) at an appropriate flow rate (to be determined - approximately 5 mL/min).

The reactors will be inoculated initially with a previously prepared suspension of the cultures of interest. The medium used will be one based on the findings of the laboratory studies. The system will be operated under total recycle using a synthetic waste without TCE until visible signs of biofilm

formation are evident. The system will then be switched to a single-pass mode of operation using a TCE containing feed. TCE degradation will be followed until a reasonably steady degradation rate has been achieved. Experiments will then be performed to verify the similarity in behavior of the culture to what has been found in laboratory shake-flasks tests. Of primary interest is the rate and extent (lower limit) of TCE degradation achievable. If the culture is not performing like its parent shake-flask culture, alterations in operating conditions will be made (based on previous and on-going laboratory findings) in an attempt to either improve the performance or determine the reason(s) for unsatisfactory performance.

When data indicate that the culture is performing in a suitable manner, real waste will be introduced to the system and the performance of the culture reassessed. As necessary, modifications (nutrient supplementation, pH adjustment, waste pretreatment, etc.) will be made to improve performance or to understand reasons for poor performance. During these experiments we will follow TCE degradation and possibly the removal of other VOC's from the waste water.

At the conclusion of the experimental effort, the reactors will be disassembled. The biomass will be removed from the support by vigorous agitation in water, recovered by centrifugation, and the dry weight determined (110 °C). The results of TCE degradation experiments with the individual reactors will be reassessed to determine the significance, if any, of biomass concentration to reactor performance.

The results of these experiments will be used in the selection of one of the cultures for use in the field demonstration reactor and where applicable to define operating parameters.

4. PRELIMINARY TESTS: TOLUENE-DEGRADING SYSTEM

The sections below describe work that is planned work at ORNL. In addition to in-house work on this system, researchers at other organizations with experience with these bacteria may be involved in aspects of the work. Details of this planned collaboration have not been worked out and are not described in this section. Thus, the details given below describe the planned work, but are subject to modification as collaborative relationships are developed.

4.1 CULTURE SCREENING/ASSESSMENT

4.1.1 Objectives

As with the methanotrophs, the objectives of the culture screening and assessment are to provide cultures for testing in the bench scale bioreactors that have the greatest likelihood of meeting the overall goals of the project. Critical questions to be addressed are the same as those listed in Section 3.1.1.

4.1.2 Evaluation Criteria

The evaluation criteria are essentially the same as those listed for the methanotrophs (see Section 3.1.2).

4.1.3 Analytical Methods

As with the methanotroph work, batch experiments will be run to compare the performance of the consortia in reference to the evaluation criteria. TCE and related compounds will be analyzed on a GC system; in selected experiments the fate of the TCE will be followed by radiolabel

techniques. Concentrations of oxygen and toluene will also be determined using GC techniques. Microbial biomass will be determined by direct counts of the bacteria or by protein measurement.

4.1.4 Laboratory Tests

The proposed work consists of a series of laboratory tests using batch cultures to compare the abilities of different toluene-utilizing isolates and consortia to degrade TCE in the presence of the contaminants found at the site and to determine what culture conditions result in the highest rates and greatest extent of TCE degradation. The work will parallel that described in section 3.1.4.

4.1.4.1 Culture acquisition and maintenance

Cultures will be obtained by enrichment of contaminated water from the K-25 site and a number of isolates are being obtained from other investigators at universities and at commercial firms and from the American Type Culture Collection (ATCC).

Pure cultures of toluene degraders will be added to specific consortia to determine if the presence of these organisms increases TCE degradation. Pure cultures are on hand that were obtained from the ATCC.

Cultures are maintained in frozen condition when not in use. Starter cultures are generated from the frozen stocks.

4.1.4.2 Culture screening

As described for the methanotrophs in section 3.1.3.2 the ability of the consortia to degrade TCE at concentrations found at the site, 140 to 250 μg/L, will be compared in experiments with synthetic media. Unlike the experiments with the methanotrophs toluene will be present in all experiments. The effect of methylene chloride (the most abundant contaminant) will be determined

first and the effects of the other contaminants found at high concentrations (e.g. 1,1,1,-trichloroethane and 1,1,-dichloroethane) and those that are known to effect TCE degradation (e.g. PCE) will also be examined. The concentrations of contaminants added will be determined based on the maximum and minimum concentrations reported in the site water. The cultures which perform best in these tests (according to the criteria defined in 3.1.2) will be used in the bench scale bioreactor studies (4.2).

4.1.4.3 Treatability tests

As with the methanotrophs the most important step in these preliminary tests are the treatability studies with the site water and these will be as described in Section 4.1.4.3. These tests integrate the effects of all of the components present in the site water on the TCE degradation activity exhibited by the cultures. Again, the results of these tests and the culture screening tests (Section 4.1.4.2) will be used to determine if site water will need to be diluted or pretreated prior to use in the bioreactors. The results of these experiments will be verified in the bench scale bioreactor studies (Section 4.2).

4.1.4.4 Nutrient optimization tests

The effect of changes in culture conditions will be tested with the aim of increasing the rate and extent of degradation. For example , the effect of addition of toluene, as a supplemental carbon and energy source to the toluene present in the site water, on the rate and extent of TCE degradation by the toluene-utilizing cultures will be examined as will the major nutrient requirements. The composition of the synthetic NATE media is listed in Section 3.1.4.4 and the tests will be done as described in that section. The information from these tests will be used to determine optimum nutrient feeds for the bench scale bioreactor systems (Section 4.2).

4.2 BENCH-SCALE BIOREACTOR TESTS

The bench-scale bioreactor tests will be conducted by ORNL and/or by a separate research organization under subcontract to ORNL. These tests have not yet been fully defined.

5. DEMONSTRATION SYSTEM DESIGN

5.1. METHANOTROPH SYSTEM

The field demonstration will consist of operation of a skid-mounted bioreactor unit for a period of four months. A similar campaign may be conducted later in parallel with the demonstration of the toluene-degrading system, depending on continued availability of the unit.

The skid-mounted bioreactor unit will be obtained from Tyndall Air Force Base (on loan). The skid contains two bioreactor columns, each approximately 16-in-diam and 6-ft-tall, plus associated piping and pumps and controls. The skid has been shipped to ORNL, and any necessary repairs and modifications will be carried out at ORNL prior to transporting the skid to the K-25 demo site. Addition of any capabilities, such as water pretreatment, off-gas treatment, etc. will be provided at ORNL. Need for such auxiliaries will be determined following inspection of the skid as-received, discussions with K-25 site personnel, and evaluation of the composition of the feed water.

The important components of the bioreactor system, either provided on the Air Force skid or to be added at ORNL, are:

- Four-gallon sump at seep to collect water for feed pump intake;
- Piping from the seep to the skid unit;
- Feed pump with associated valves and controls;
- Steam stripper and air oxidation pretreatment systems;
- Bioreactor columns and packing material for retention of biofilms;
- Methane-air supply mixture (3% v/v) supply (cylinders);
- Tankage and metering pump for nutrients (mixture to be determined via laboratory-scale treatability studies) and pH adjustment;

- Piping and valving for liquid recycle during startup and discharge to tankage during operation;
- Tankage for effluent water;
- Safety monitoring and shutdown systems;
- Process control and monitoring equipment (temperature, dissolved oxygen, pH at several locations).

This equipment package will serve to obtain water at ~1 gpm maximum from the seep, adjust the pH to ~7 if necessary, add nutrients, and deliver the water to the top of the first bioreactor column. A mixture of 3% methane in air will be provided to the bioreactors in concurrent flow with the liquid to minimize stripping of the volatile organics to the gas phase.

The layout of equipment in the van trailer is shown in Figure 2. A schematic diagram of piping and valving of the system is shown in Figure 3.

5.2 TOLUENE-DEGRADING SYSTEM

The toluene-degrading system will be designed at a later time. The system will be designed as a separate module which will be installed either in the van trailer or adjacent to it on the site. The unit will be designed to operate independently from the methanotrophic system, and will use the same influent flow as the methanotrophic system.

Figure 2. Layout of the Methanotrophic Bioreactor System in the Van Trailer

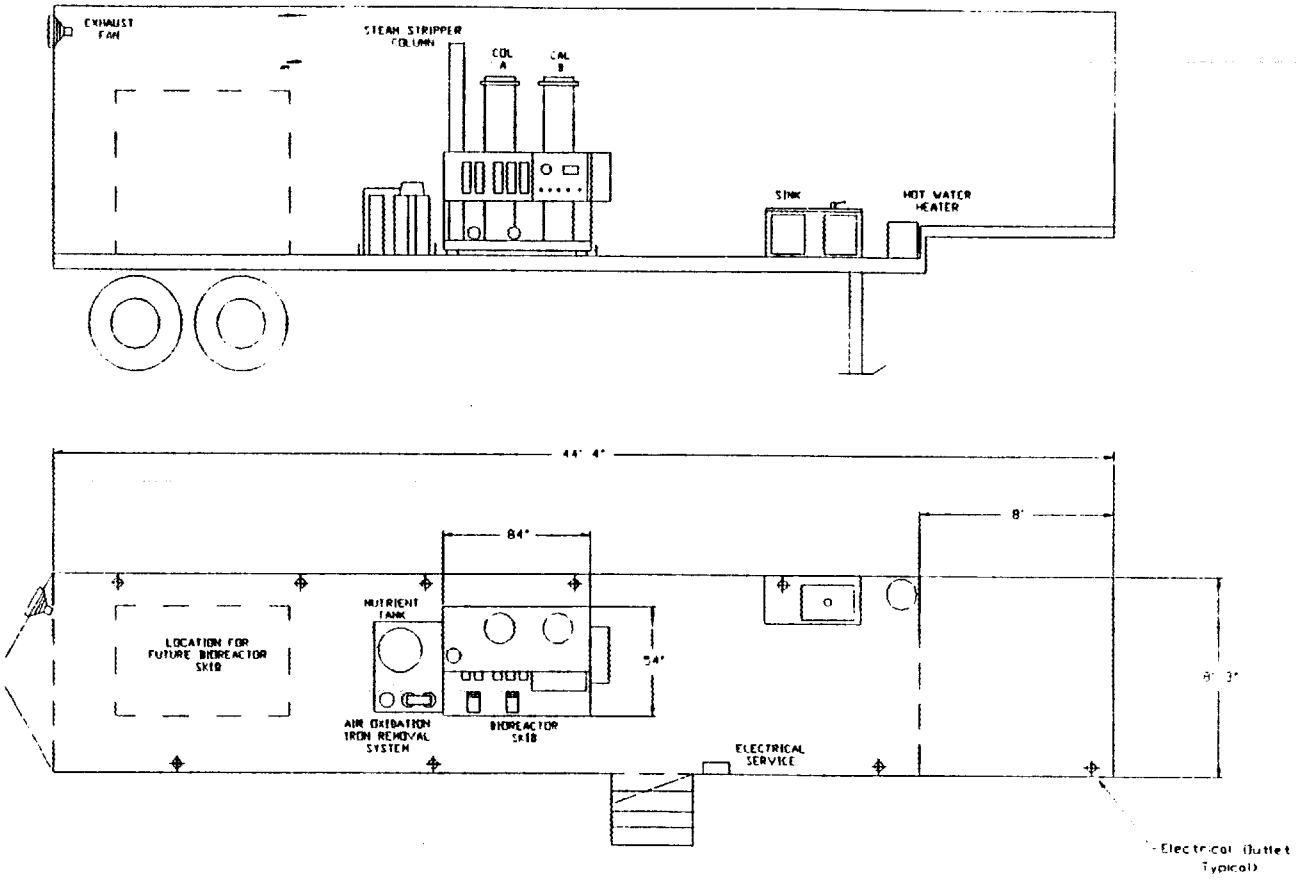

LAYOUT FOR TCE BIOREACTOR SYSTEM

DRW R L Cummins | DATE 05/06/91

Figure 3. System Flowsheet for Methanotrophic Bioreactor System and Air Oxidation and Steam Stripper Pretreatment Systems

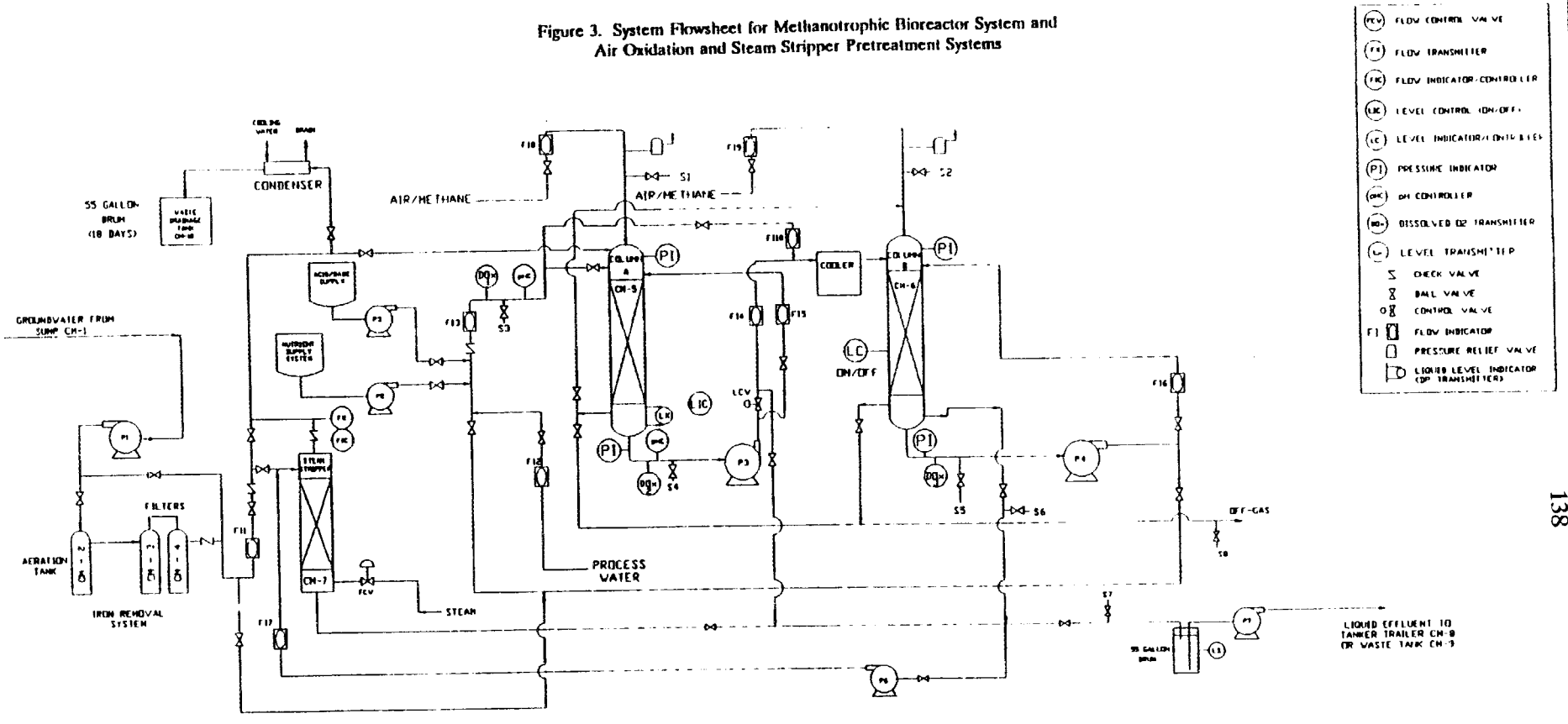

THIS DRAWING PRODUCED ON AUTOCAD
DO NOT REVISE MANUALLY

NO REPRESENTATION OR WARRANTY (EXPRESSED OR IMPLIED) IS MADE AS TO THE ACCURACY, COMPLETENESS OR USEFULNESS OF THE INFORMATION OR STATEMENTS CONTAINED IN THESE DRAWINGS, OR THAT THE USE OR DISCLOSURE OF ANY INFORMATION, APPARATUS, METHOD OR PROCESS DISCLOSED IN THESE DRAWINGS MAY NOT INFRINGE PRIVATE RIGHTS OF OTHERS. NO LIABILITY IS ASSUMED WITH RESPECT TO THE USE OR FOR DAMAGES RESULTING FROM THE USE OF ANY INFORMATION, APPARATUS, METHOD OR PROCESS DISCLOSED IN THESE DRAWINGS MADE AVAILABLE FOR INFORMATION TO BIDDERS ARE NOT TO BE USED FOR OTHER PURPOSES, AND ARE TO BE RETURNED UPON REQUEST OF THE FORWARDING CONTRACTOR

REV				DESCRIPTION	A-E	BY	CH	SECT	DEPT	DATE

REVISION

TOLERANCES UNLESS OTHERWISE SPECIFIED
FRACTIONS ±
XX DECIMALS ±
XXX DECIMALS ±
ANGLES ±
BREAK SHARP EDGES MAX
FINISH

A-E
HR-ES
BUR

DES		
DRW	R L Cummins	08/02/91
CHK	H L Jennings	
SECT	S E Harvey	
DEPT & PLANT		
PE	T L Donaldson	
CR		
PJ		
REQ		
FAC SUP		

DRAWING APPROVALS — DATE

CHEMICAL TECHNOLOGY DIVISION
OAK RIDGE NATIONAL LABORATORY

MARTIN MARIETTA — MARTIN MARIETTA ENERGY SYSTEMS, INC.
Operated for the DEPARTMENT OF ENERGY under U.S. GOVERNMENT CONTRACT DE-AC05-84OR21400
Oak Ridge, Tennessee • Paducah, Kentucky

SYSTEM FLOWSHEET FOR COMETABOLIC DESTRUCTION OF TCE
(With Pretreatment)

1	48	49	50	PLANT	BLDG	FL	SHEET	OF	TYPE
				X-10	TRAILER		01	01	CLASS

SCALE None — ID — REV 0

CREATED BY SPECIAL PROJECTS GROUP
JMS 7/30/96

Figure 4. Site Plan for Bioreactor Demonstration

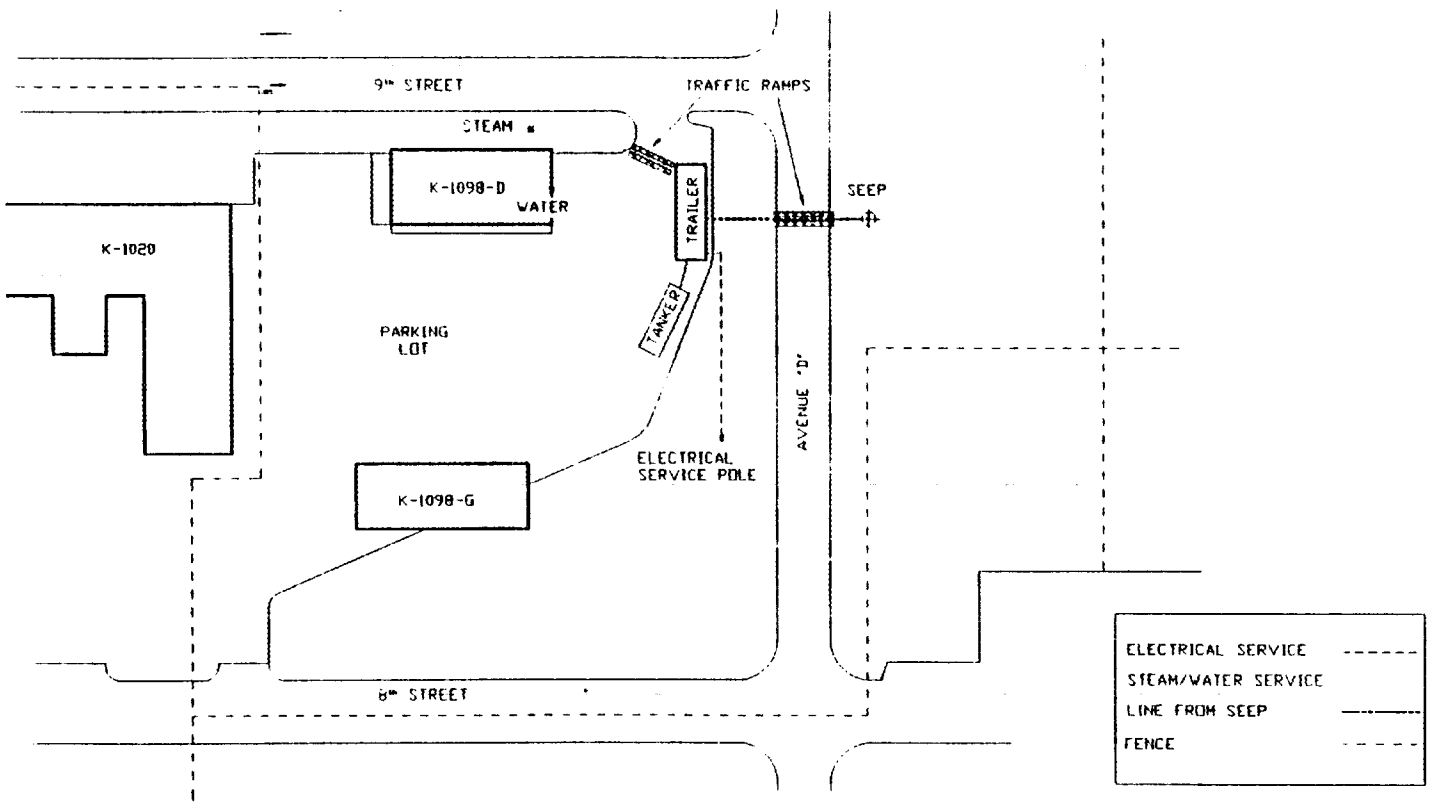

THIS DRAWING PRODUCED ON AUTOCAD
DO NOT REVISE MANUALLY

NO REPRESENTATION OR WARRANTY EXPRESSED OR IMPLIED, IS MADE AS TO THE ACCURACY, COMPLETENESS OR USEFULNESS OF THE INFORMATION OR STATEMENTS CONTAINED IN THESE DRAWINGS OR THAT THE USE OR DISCLOSURE OF ANY INFORMATION, APPARATUS, METHOD OR PROCESS DISCLOSED IN THESE DRAWINGS MAY NOT INFRINGE PRIVATE RIGHTS OF OTHERS. NO LIABILITY IS ASSUMED WITH RESPECT TO THE USE OR FOR DAMAGES RESULTING FROM THE USE OF ANY INFORMATION, APPARATUS, METHOD OR PROCESS DISCLOSED IN THESE DRAWINGS MADE AVAILABLE FOR INFORMATION TO BIDDER ARE NOT TO BE USED FOR OTHER PURPOSES AND ARE TO RETURNED UPON REQUEST OF THE FORWARDING CONTRACTOR

REV	TR			DESCRIPTION	A-E	BY	CHK	SECT	DEPT	DATE

REVISION

TOLERANCES UNLESS OTHERWISE SPECIFIED
FRACTIONS ±
XX DECIMALS ±
XXX DECIMALS ±
ANGLES ±
BREAK SHARP EDGES MAX
FINISH

A-E
MM-ES
DOE

DRW	R L Cummins	05/03/91
CHK	H L Jennings	5/7/91
SECT	S E Herkes	5/7/91
DEPT & PLANT		
PE	T L Donaldson	5/7/91

DRAWING APPROVALS — DATE

CHEMICAL TECHNOLOGY DIVISION
OAK RIDGE NATIONAL LABORATORY
MARTIN MARIETTA — MARTIN MARIETTA ENERGY SYSTEMS, INC.
operated for the DEPARTMENT OF ENERGY under U.S. GOVERNMENT contract DE-AC-05-84OR21400
Oak Ridge, Tennessee & Paducah, Kentucky

SITE PLAN FOR
TCE BIOREACTOR SYSTEM

1	48	49	58	PLANT	BLDG	FL	SHEET	OF	TYPE / CLASS
				X-10	Trailer		01	01	

SCALE: None — ID — REV: 0

CREATED BY SPECIAL PROJECTS GROUP
JVS 7/20/88

6. SITE REQUIREMENTS

6.1 SPACE AND LOCATION

The skid-mounted unit with associated tanks and equipment will require an area ~ 12 ft x 80 ft. This area will provide room for the processing trailer containing the methanotrophic bioreactor unit, pretreatment equipment, an additional bioreactor skid for the toluene demonstration (if the unit cannot be mounted in the trailer), and a tanker trailer for waste transportation and disposal.

The processing trailer and waste-holding trailer will be parked along the eastern-most curb in the parking lot adjacent to Building K-1098-D. This will provide easy access to all units and provide a level surface for the trailers. The site plan is shown in Figure 4.

6.2 ACCESS AND SECURITY

The seep and all of the field demonstration facilities are located within the limited area of the K-25 site. Access to the limited area of the K-25 site is available to all L and Q-cleared Martin Marietta Energy Systems (MMES), DOE and MMES subcontractor personnel. All uncleared personnel shall be escorted by an L or Q-cleared photo badged person. All visitors (Non MMES, DOE and/or MMES subcontractors) requiring access to the K-25 site shall make arrangements and obtain permission for their visit from the Visitor Control Section of the K-25 site. This must be done a minimum of 24 hours in advance.

6.3 PERSONNEL STAGING

Because the demonstration site is only 15 minutes from ORNL, minimal personnel staging requirements will be necessary. Operating staff will dress out appropriately (Health and Safety Plan; Appendix B) before entering the K-25 Site.

Project staff will use bathroom and lunchroom facilities in Building K-1098-D as necessary during operation of the demonstration.

6.4. SITE PREPARATION

Since the parking lot of Building K-1098-D provides a paved and level surface for our bioreactor system, preparation of the site to provide access will be minimal. Temporary utility services will be needed as discussed below. A 4-gallon stainless steel sump will be installed directly under the seep across the road and to the east of the parking lot. Piping will be installed to supply seep water to the bioreactor system in the process trailer. A traffic ramp will be installed to permit traffic to cross the seep-water supply lines.

6.5 UTILITY REQUIREMENTS

Utility needs will include process water (~ 1 gpm), electricity (240 VAC, 50 amp), and steam (15 psi). Supply lines for the process water and steam will be run from Building K-1098-D. A traffic ramp will be installed to allow vehicle access to the parking lot. Electrical service will be obtained from an existing pole in the southeast corner of the parking lot. A pole will be set next to the trailer to facilitate running electrical service overhead.

Telephone service is needed for safety reasons. This service will be provided by cellular phone due to the cost and logistics involved in running a hard line to the trailer.

6.6 WASTE GENERATION AND DISPOSAL

The waste streams to be produced by the demonstration are defined and characterized, and procedures for their disposal are delineated, in the Waste Management Plan (Appendix A).

7. OPERATION

7.1 METHANOTROPH SYSTEM

7.1.1 Pre-Operational testing

A series of pre-operational tests will be performed prior to the operation of the bioreactor system with seep water as the influent to the system. During these pre-operational tests process water and air will be utilized to assess the hydraulic integrity of the bioreactor unit and all pertinent pretreatment and support systems. Instrumentation will also be checked for proper operation. Steam will be supplied to the steam stripper to verify that it will work as designed.

During these pre-operational tests, existing procedures will be further developed and verified while all modes of operation which are likely to be used will be tested.

7.1.2 Setup

The bioreactor trailer and associated equipment will be transported to the site from ORNL and parked in the lot adjacent to building K-1098-D. Accommodations for 3% methane/air cylinders will be made at ORNL before transporting to the site. Some on-site plumbing may be needed to complete the seep water supply (e.g., install the feed sump) and to route the treated water effluent to the waste tank. A flexible steam line will be run from a header on the outside wall of Building K-1098-D through a traffic ramp to the process trailer. A process water line will also be connected to the trailer from the same wall in the same manner. The last remaining step to operability will be to simply plug in the electrical service line.

7.1.3 Startup

Operating conditions for the process equipment will be selected earlier in accordance with results of the bench-scale bioreactor studies. These conditions include principally nutrient levels and pH. These conditions will be detailed in the Technology Status Report (to be submitted separately). Other conditions are already known, as discussed below.

Process water and air alone will be used initially for shakedown purposes. The process water supply will be connected to a recycle tank to allow for recirculation of water through all process components. Air alone (no methane) will be supplied to the gas system. Operational aspects of the equipment will be checked and verified under these conditions to ensure that all pumps, valves, meters, sensors, recorders, etc. are working properly and that system operation is stable with no leaks. A satisfactory performance period shall be 24 hours of continuous operation under the conditions described above, at a liquid flowrate of 1 gpm and a gas (air) flowrate of 0.1 cfm. When this goal has been reached, operation will progress to inoculation and addition of dilute site water, as described below.

To inoculate the bioreactor, a sealed recycle tank will be filled with process water and the required nutrients to promote growth of the microrganisms. Liquid effluent will be returned to this recycle tank rather than discharged to our waste tank. An inoculum of several liters of culture (prepared at ORNL) will be added to the tank. Methane at 3% in air will be provided to the bioreactors on a continuous basis at approximately 0.1 cfm total gas flow.

Makeup water will be added as needed each day during the startup period. Nutrient levels and pH will be checked and adjustments made as necessary.

After approximately one week, several liters of seep water will be added to the recycle tank to begin acclimation of the culture. Over a period of one month, the quantity of seep water will be

gradually increased until the system is operating on 100% seep water. At this point, operation will be converted from recycle to once-through using seep water.

During the startup period, gas and liquid samples will be taken at least daily and analyzed to assess bioactivity. The primary indicator for bioactivity will be methane consumption. Assays for TCE and VOCs in the water will also be conducted daily to assess degradation activity. Grab samples will be obtained in the mornings, transported to ORNL, and assayed in the afternoons. If necessary, adjustments can be made to process conditions the same day; non-critical action can be postponed until the following day.

7.1.4 Operation Run Period

The equipment will be operated continuously (24 hours/day) at stable conditions for approximately one month after startup and achievement of steady state, as described above. The operating conditions for this run period will be chosen based on results from the bench-scale reactor studies.

Three operational modes will be evaluated during the initial four-month testing period. In mode 1 (Figure 5) the steam stripping unit will be employed to remove VOCs from the influent seep water. The VOCs contained in the stripper overhead will be directed to the bioreactor columns, which will be operated in series. The bioreactor effluent will be returned to the stripper influent stream. The stripper bottoms will be disposed of (see Waste Management Plan, Appendix A).

In mode 2 (Figure 6) an air oxidation system will replace the steam stripper. An air stream will remove iron from the seep water by precipitation; the oxidizer effluent and VOC-laden vapor will be directed to the bioreactor. The bioreactor effluent will be directed to the steam stripper, which in this mode will be used as an effluent polishing step to remove VOCs, thus permitting disposal of the bulk of the effluent (Appendix A; Waste Management Plan).

In mode 3 (Figure 7) the seep influent will be directed to the bioreactor columns without pretreatment. Due to the potential for iron precipitation in the bioreactor units and thus possibly fouling of the columns, this mode will be tested at the end of the operating period. Bench-scale tests will be employed to evaluate the likelihood of clogging before the test is undertaken.

Continuous operation on a 24-hour/day basis is desirable. To achieve this goal, monitoring systems have been installed on the skid-mounted unit to detect undesirable conditions such as tank overflow etc. These controls along with periodic checks by the K-25 shift supervisor or his designee should allow the system to run unattended overnight with little problem. On weekends, an ORNL employee would visit the site at least once to take data and provide any maintenance that may be needed.

Routine operational duties will be handled primarily by an ORNL team member who will travel to the site each morning. Duties will include a general inspection of the status of the equipment to check for proper operation, any leaks, record operation parameters, maintain nutrients and gas supplies, service water pretreatment equipment, etc.

Grab samples of the feed water, the water between the two columns, and the effluent water will be taken upon arrival at the site each morning, provided that a preliminary inspection indicates that the process is operating properly. Sampling procedures will follow good practice to avoid volatilization of organics. A comprehensive sampling plan is included as Appendix E.

Samples will be transported to ORNL for analysis of TCE the same afternoon by ORNL project staff. Twice per week, TSS and VSS will be determined for the water samples. Once per week, aliquots of the water samples will be submitted to the ORNL Analytical Chemistry Division for verification of TCE concentration and measurement of other VOCs.

An off-gas sample will be collected daily and analyzed for TCE, VOCs, and methane to assess the extent of stripping and methane consumption.

The operator will monitor the quantity of the water present in the waste tank, and will arrange for disposal periodically as necessary (see Waste Management Plan, Appendix A).

7.2 TOLUENE-DEGRADING SYSTEM

The plan for operation of the toluene-degrading system will be developed and added at a later time.

7.3 DEMOBILIZATION AND DECONTAMINATION

To decommission the unit, the packing will be removed from the two bioreactor columns, placed in 55-gal drums, and washed with water to remove the biofilms. The wash water will be rough-filtered to remove the majority of the biomass and then will be disposed in the same manner as the treated effluent water from the process. The sludge will be drummed for subsequent disposal. Samples will be taken for analysis to determine the appropriate disposal method.

The process equipment will be flushed with process water for 24 hours. After this treatment, the flow will be stopped and flooded conditions will be maintained for another 24 hours. Wash water will be disposed of in the same manner as the treated process effluent.

Following flushing, the contents of the system will be sampled and analyzed for organics and radionuclides to determine if the level of decontamination is adequate per HP requirements. If so, the equipment will be disconnected from the site utilities and prepared for return shipment to Tyndall Air Force Base. Any auxiliary equipment added to the system at ORNL will be removed before the unit is returned to the Air Force.

Temporary utility services (water, steam, electrical) will be disconnected from the trailer and traffic ramps will be removed. The sump tank along with its associated piping and traffic ramp will be removed from the seep supply line. The sump tank and piping will be flushed with process water,

which will be analyzed and disposed of in the same manner as the treated process effluent.

Finally, the process trailer and tanker trailer will be transported to storage at ORNL.

Figure 5. OPERATIONAL MODE 1: STEAM STRIPPER PRETREATMENT

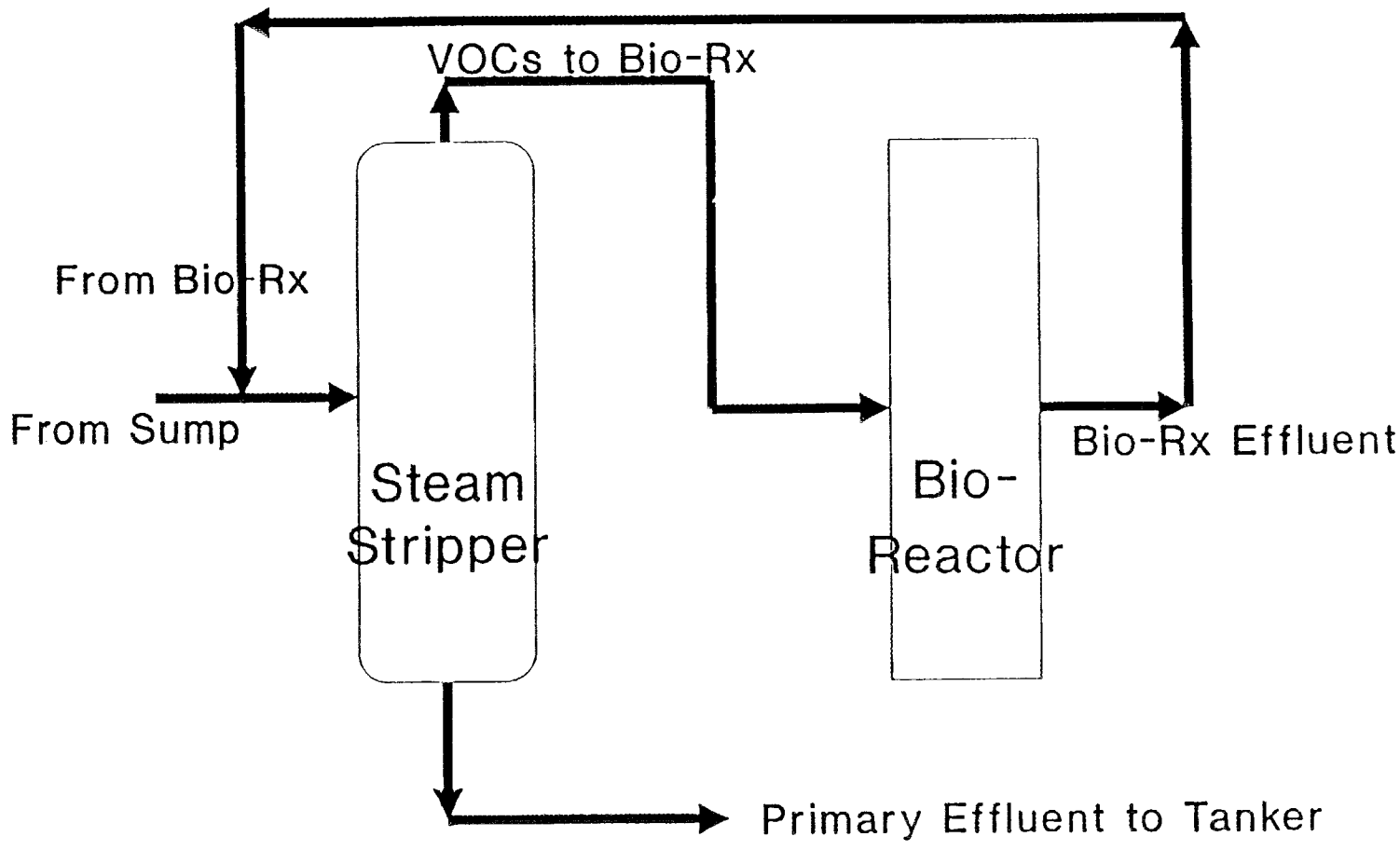

Figure 6. OPERATIONAL MODE 2: AIR OXIDATION PRETREATMENT WITH STEAM STRIPPING POST-TREATMENT

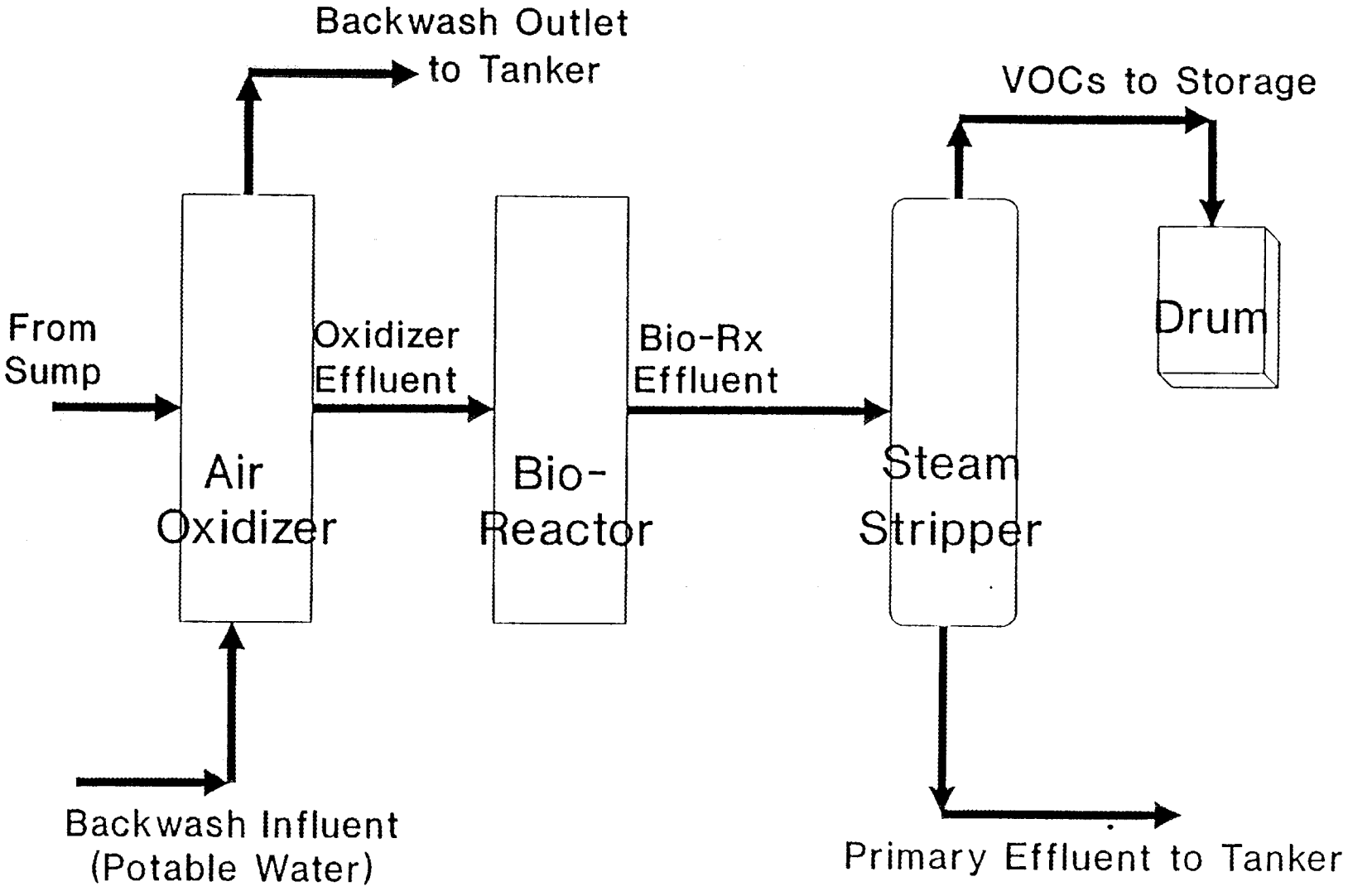

Figure 7. OPERATIONAL MODE 3: DIRECT TREATMENT OF SEEP WATER WITH STEAM STRIPPING POST-TREATMENT

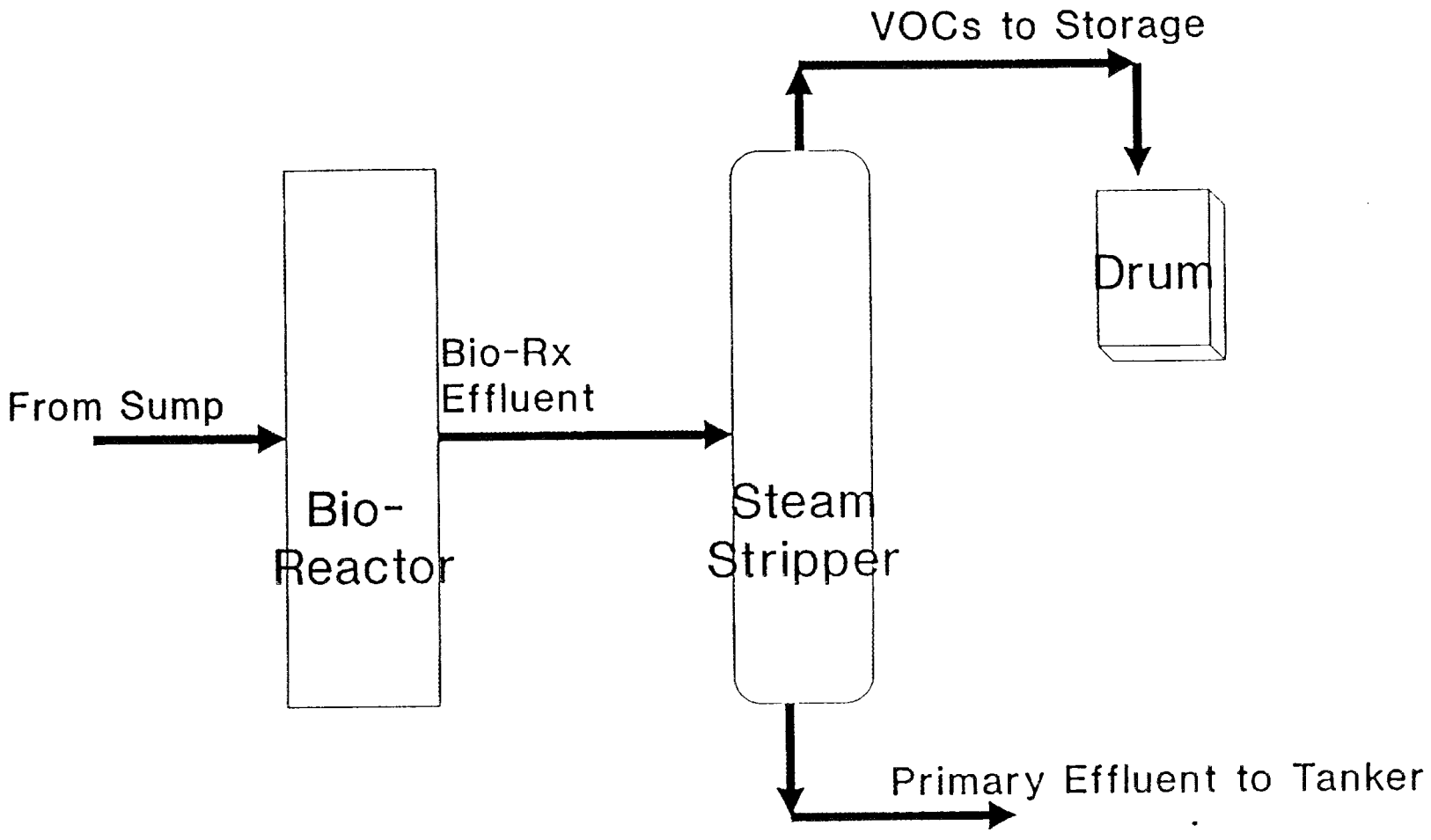

8. REPORTING AND TECHNOLOGY TRANSFER

Reporting to DOE will occur through monthly progress reports coordinated through the ORNL Waste R&D Program Office. Noteworthy events during preparation and conducting of the demonstration will be reported as "weekly highlights" through the Program Office.

Prior to initiation of operation, the ORNL Public Relations Office will be contacted to arrange for appropriate publicity for the demonstration. Activities may include a press release and/or opportunity for press to observe the demonstration system.

Following shutdown of the initial bioreactor campaign the site will be decommissioned a DT&E Technology Evaluation Report will be prepared. The report will summarize the results of the demonstration campaign, and will recommend following tests to optimize the more promising of the technologies and to demonstrate its effectiveness at other DOE sites.

Technology transfer will occur throughout the demonstration through presentations by project staff at scientific and technical meetings. Explicit opportunities for technology transfer will be coordinated through the Martin Marietta Office of Technology Transfer.

9. ENVIRONMENTAL COMPLIANCE

9.1 NATIONAL ENVIRONMENTAL POLICY ACT (NEPA)

Prior to initiation of any activities at the demonstration site, written approval shall be obtained from DOE-HQ that all NEPA requirements have been satisfied. The request for project review and approval shall be coordinated through the ORNL Environmental Review and Documentation Office.

[A request for approval of the project through Memorandum-to File (MTF) was submitted to DOE on September 7, 1990. The MTF was signed by L. P. Duffy on September 27, 1990.]

9.2 RESOURCE CONSERVATION AND RECOVERY ACT (RCRA)

9.2.1 Bench-Scale Treatability Tests

Notification of intent to conduct treatability tests will be submitted to the ORNL Office of Environmental Regulatory Compliance prior to initiation of laboratory and bench-scale tests.

Logs will be maintained by authorized project staff to record all waste received at ORNL from the K-25 Site. Annual reports of waste treatment testing will be submitted through the ORNL Office of Environmental Regulatory Compliance.

9.2.2 Technology Demonstration

Approval shall be obtained from both the Tennessee Department of Health and Environment (TDHE) and the U. S. Environmental Protection Agency (USEPA) for compliance with all RCRA requirements prior to initiation of operation using site groundwater. Contact with regulatory agencies shall be coordinated through the ORNL Office of Environmental Regulatory Compliance, which will work in conjunction with the K-25 Site Environmental Compliance Group to ensure appropriate

submittal of all necessary permit applications.

[In a letter dated February 7, 1991 to R. C. Sleeman, DOE Environmental Restoration Division, E. C. Leming, DOE Oversight Coordinator for the TDHE suggested that the demonstration be managed under the Tennessee Water Quality Control Act via Permit-by-Rule modification. A Permit-by-Rule submittal will be prepared and submitted from the ORNL Office of Environmental Regulatory Compliance to the K-25 Environmental Compliance Group for submittal to the TDHE prior to initiation of operation.

In a conference telephone call on May 9, 1991 with C. L. Baker (K-25 Site Environmental Compliance Group) and N. S. Dailey (ORNL Office of Environmental Regulatory Compliance) , L. Romanowski of the USEPA stated that the proposed bioremediation unit would be exempt from permitting by the USEPA. A copy of the Permit-by-Rule submittal will be sent for information purposes to Mr. Romanowski.]

9.3 CLEAN WATER ACT

The effluent from the bioreactor shall be collected and discharged to an NPDES-permitted wastewater treatment facility at the K-25 Site (See "Waste Management Plan").

9.4 CLEAN AIR ACT

The project design and maximum atmospheric emission levels shall be reviewed by the K-25 Site Environmental Compliance Group to determine whether a modification to the existing K-25 Site permit will be required.

[In a memorandum to S. E. Herbes dated March 26, 1991, L. W. Long stated that "the Environmental Management Division has determined that no air permits will be required for this facility."]

10. CONTRACTS AND LEGAL ISSUES

The field demonstration may require use of a subcontractor or industrial partner to install and/or operate parts of one of the bioreactor systems. Before any subcontractor or industrial partner is permitted on site to work on the project, a contract or written agreement will be required to be in place that addresses:

- Operator training requirements;
- Indemnification;
- Review and implementation of a Health and Safety Plan for the subcontracted work;
- Disposition of wastes produced;
- Disposition of contaminated equipment;
- Equipment maintenance;
- Project delays caused by either contractors or MMES.

Contracts or agreements will be prepared with assistance from MMES Purchasing and the MMES Legal Department as needed.

11. SCHEDULE

A Gannt chart which summarizes the project schedule (updated as of July 1991) is included as Figure 8. The key project milestone is initiation of bioreactor operation using site groundwater on or before September 30, 1991.

Operation of the bioreactor units is planned to terminate on January 31, 1993. Site decommissioning is planned for completion by April 30, 1993. Submittal of the final report and completion of all other project requirements is planned for September 30, 1993.

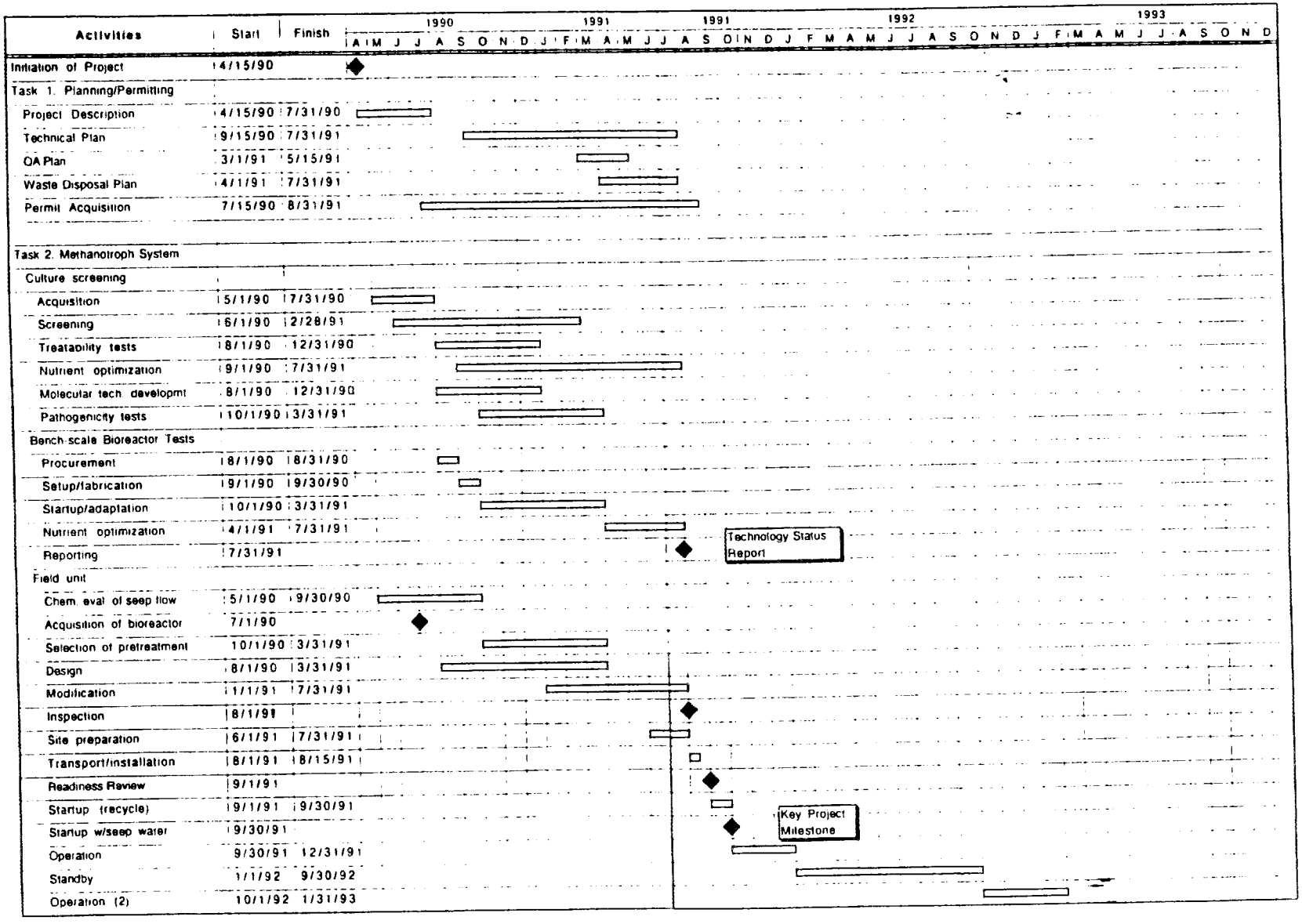

Figure 8. Gannt Chart of Schedule for the Cometabolic Bioreactor Demonstration Project

Activities	Start	Finish
Task 3. Toluene-degrading System		
Culture screening/assessment	7/1/90	6/30/91
Bench-scale tests	8/1/91	2/28/92
Field unit		
Design	1/1/92	2/28/92
Procurement	1/15/92	2/28/92
Fabrication	3/1/92	5/31/92
Testing	6/1/92	7/31/92
Transportation/installation	8/1/92	8/31/92
Startup (recycle)	9/1/92	9/30/92
Operation w/seep water	10/1/92	1/31/93
Task 4. Post-Operation Activities		
Site decommissioning	2/1/93	4/30/93
Final report		
Preparation	2/1/93	7/31/93
Review/revision	8/1/93	9/30/93
Submittal	9/30/93	

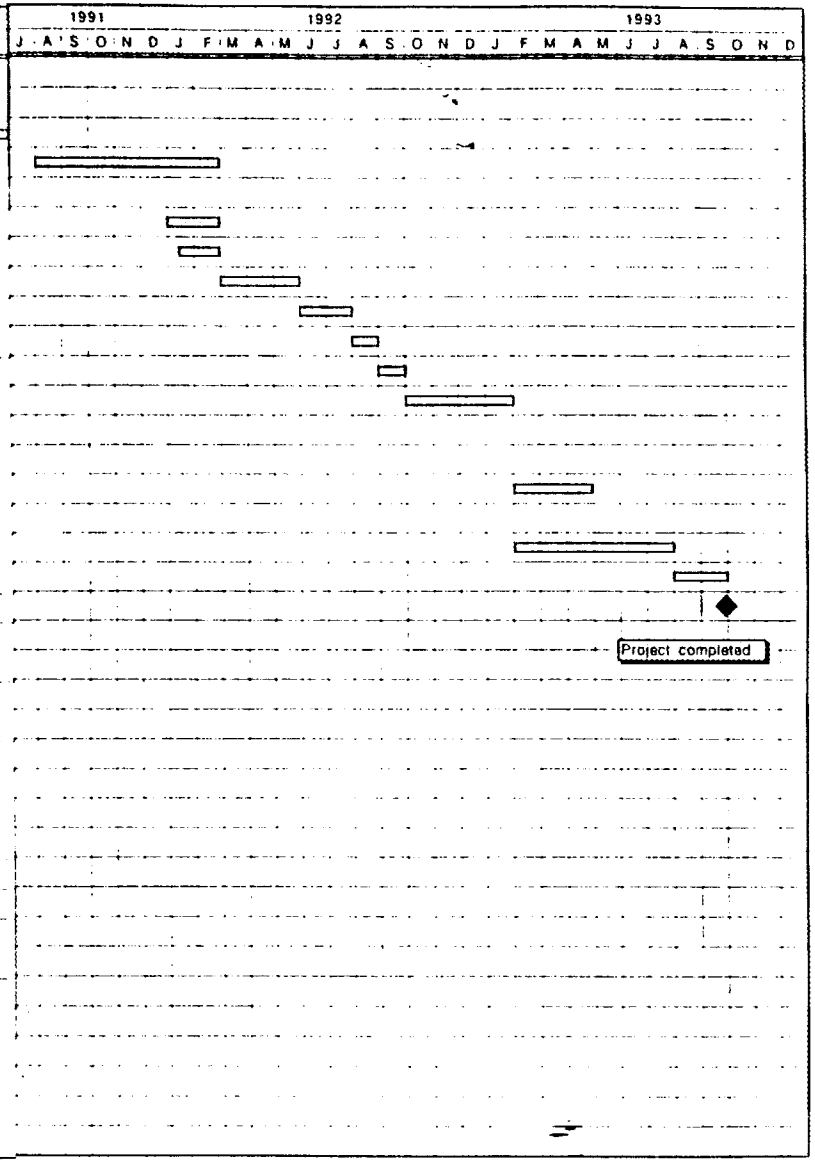

Figure 8. (continued)

APPENDIX E

EXAMPLE OF WASTE MANAGEMENT PLAN

Co-Metabolic Bioreactor Demonstration at the Oak Ridge K-25 Facility

M. I. Morris
S. E. Herbes
T. L. Donaldson
R. M. Counce

July 26, 1991

MARTIN MARIETTA ENERGY SYSTEMS, INC.
Oak Ridge, Tennessee

Prepared for the U.S. Department of Energy
Under U.S. Government Contract DE-AC-05-84OR21400

APPROVALS

WASTE MANAGEMENT PLAN

Co-Metabaolic Bioreactor Demonstration
at the Oak Ridge K-25 Site

M. I. Morris — Date: 7/26/91
Demonstration Coordinator

H. L. Jennings — Date: 7/30/91
Waste Certification Officer (WCO)

T. L. Donaldson — Date: 7/30/91
Project Task Leader

S. E. Herbes — Date: 7/30/91
Principal Investigator

R. D. Gibby — Date
K-25 Site Environmental Complience

G. A. Conner — Date
K-25 Site Waste Management Storage

M. J. Shelton — Date
K-25 Site Waste Management Transportation

T. A. Bowers — Date
K-25 Site Waste Management Treatment

WASTE MANAGEMENT PLAN: ORNL BIOREACTOR DEMONSTRATION AT THE K-25 SITE

1.0 OBJECTIVE

The objective of this Plan is to define the steps required to treat and dispose of wastewater and other waste materials generated by operation of a bioreactor demonstration project (DOE RDDT&E Project OR-369-AB: Demonstration of Co-metabolic Techniques") in accordance with all applicable operating procedures of the K-25 Site, as well as in compliance with regulations and requirements of both state and federal regulatory authorities.

1.1 Approvals

This Plan shall be reviewed and approved in writing by the K-25 Plant Waste Disposal Coordinator (PWDC) and CNF Process Engineer prior to initiation of operation of the bioreactor demonstration system.

1.2 Responsibilities

The ORNL Waste R&D Program Demonstration Coordinator shall be responsible for coordinating with the K-25 PWDC all work activities at the demonstration site associated with waste disposal.

Prior to initiation of operation of the demonstration, the Project Manager shall designate a Project Waste Certification Officer (WCO). The WCO shall be responsible for certifying that all waste materials meet the criteria of the K-25 PWDC for disposal and shall coordinate all disposal schedules with the K-25 Site Waste Management Division.

2.0 APPROACH

2.1 Waste Stream Characterization

This Waste Disposal Plan has been developed based on initial seep water characterization data (Appendix A). These data were used in conjunction with knowledge of anticipated process conditions to generate contaminant concentrations expected in the primary effluent stream under the three principal modes of operation.

2.2 Additional Seep Characterization Data Collection

Prior to installation and operation of the bioreactor, samples will be collected from the seep (which will serve as influent to the bioreactor) and will be analyzed for the constituents listed as waste acceptance criteria of the K-25 Central Neutralization Facility (CNF) [item A(2) in Conner, G. D. and M. A. McGaha, "The Oak Ridge Gaseous Diffusion Plant K-1407-H and K-1407-A Central Neutralization Facility: Waste Acceptance Criteria," Report No. K/SS-538, February 1990.]

Two sampling campaigns will be conducted within the six-month period prior to generation

of effluent for treatment and discharge. The results of these sampling campaigns will be reported to the K-25 Waste Management Division. If the preoperational seep analyses indicate that a change in seepage composition has occurred and that additional criteria may be exceeded, the K-25 Waste Management Division may request that this Plan be modified and resubmitted to the K-25 Waste Management Division for review and approval.

3.0 WASTE CHARACTERIZATION

Three types of waste will be produced by the Co-Metabolic Bioreactor Demonstration: (1) contaminated water, (2) contaminated off-gas, and (3) sludge.

3.1 Primary and Secondary Bioreactor Effluent Streams

A portion of the seep stream will be routed to the experimental system; the remainder of the seep will continue to flow as is currently the case. The portion of the water routed to the experimental system will subsequently be routed to a tank truck and disposed of as per appropriate regulation for the K-25 site. The water effluent from the experimental system will be of three primary types coinciding with the three primary modes of system operation: (1) steam stripping of the groundwater, (2) iron removal by air oxidation prior to introduction of groundwater to the bioreactors, and (3) direct introduction of the groundwater into the bioreactors without prior iron removal. Modes 1, 2, and 3 are shown in Figures 1, 2, and 3 respectively.

Operational mode 1 has a primary effluent liquid stream; operational modes 2 and 3 have a primary effluent liquid stream and a smaller secondary effluent liquid stream. Estimates of organic compound concentration in water from the bioreactor system for these modes of operation are presented in Table 3.1. These concentrations are particular to the design and operation of the experimental system and are not necessarily representative of a system installed to accomplish total remediation of the seep stream.

Almost all of the volatile organic compounds will be removed from the groundwater by the steam stripper in mode 1 of operation; essentially only the organic components of the seep stream are introduced into the bioreactor which operates in almost complete recycle. For operating modes 2 and 3, the groundwater flows through the bioreactor and then is routed to the steam stripper for removal of residual hydrocarbon species. The overhead stream from the steam stripper is condensed as the secondary liquid effluent stream.

Effluent liquid flow rates from the bioreactor demonstration are shown in Table 3.2. Water requirements for the backwash of the iron removal filter are discussed later. Trace amounts of suspended solids from natural shedding of the biomass, as well as nutrients added to the groundwater, will also be present. The nutrients include trace quantities of calcium nitrate, magnesium sulfate, phosphates, and minerals; these materials are added to maintain the metabolic vitality of the biomass.

3.2 Water for Backwash of Filter for Iron Removal System

Water is required for backwash of the iron removal filter during Mode 2 operation. The backwash cycle is based on the quantity of water per cycle flowing through the filtration

Figure 1: MODE 1 FLOW DIAGRAM

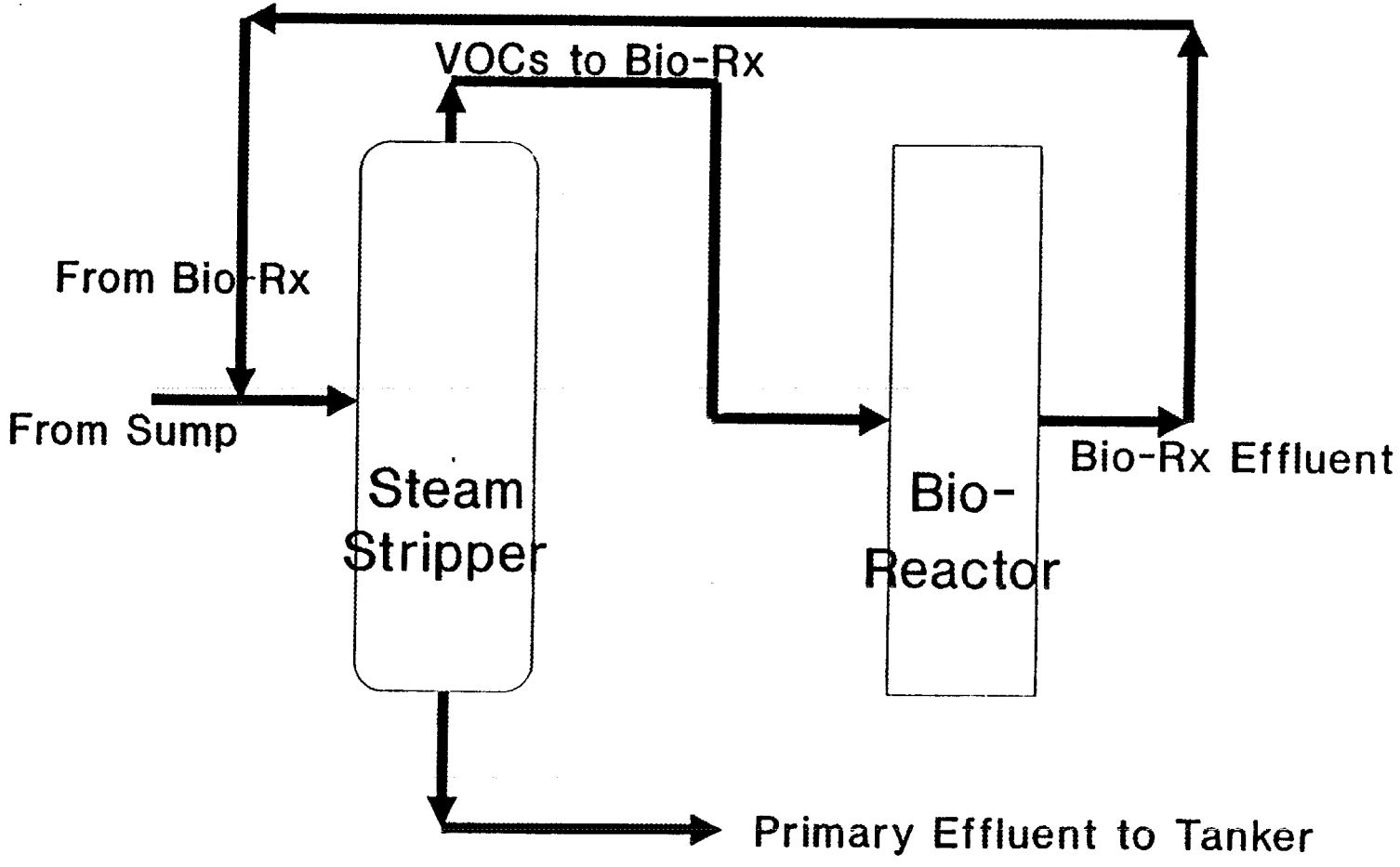

Figure 2: MODE 2 FLOW DIAGRAM

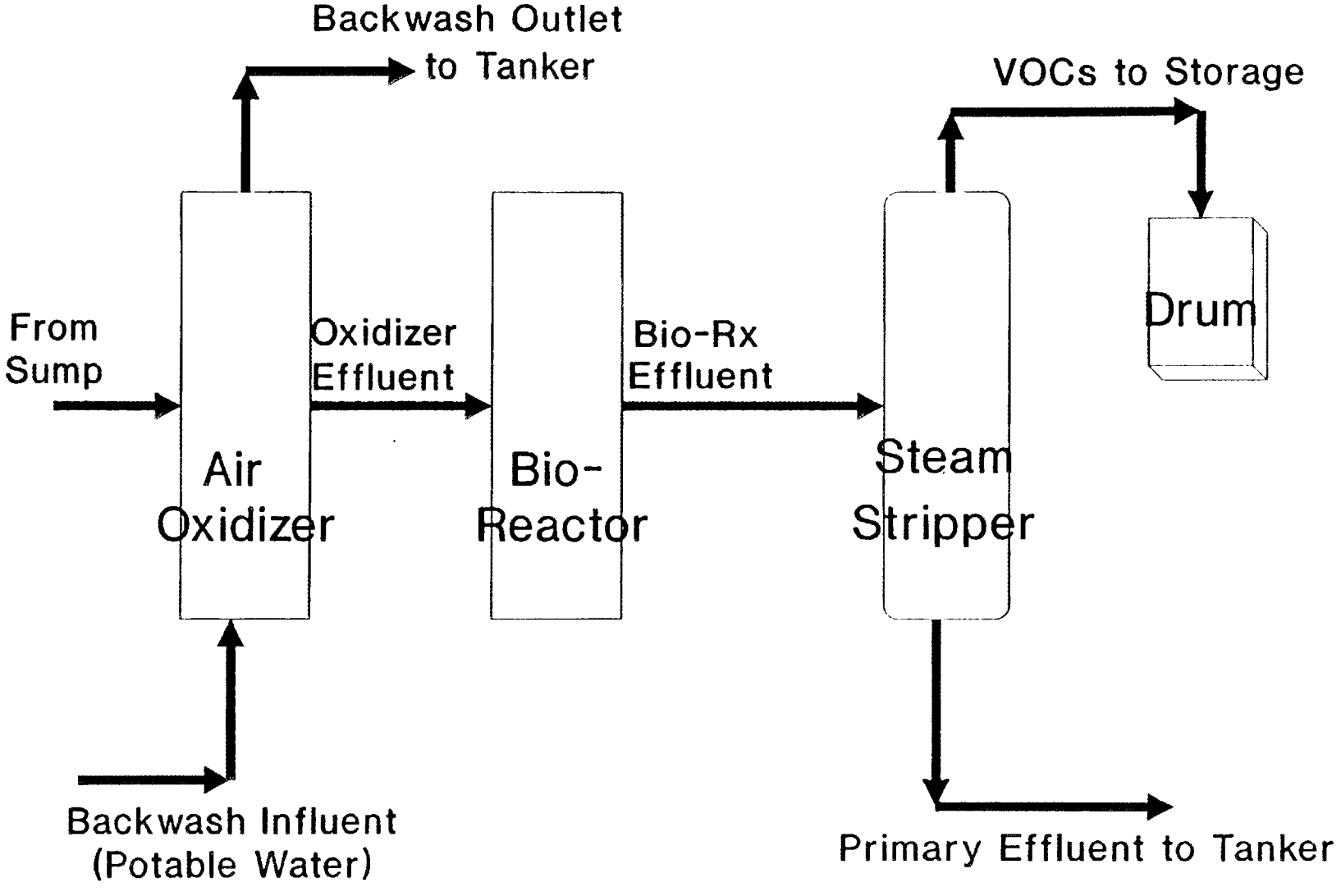

Figure 3: MODE 3 FLOW DIAGRAM

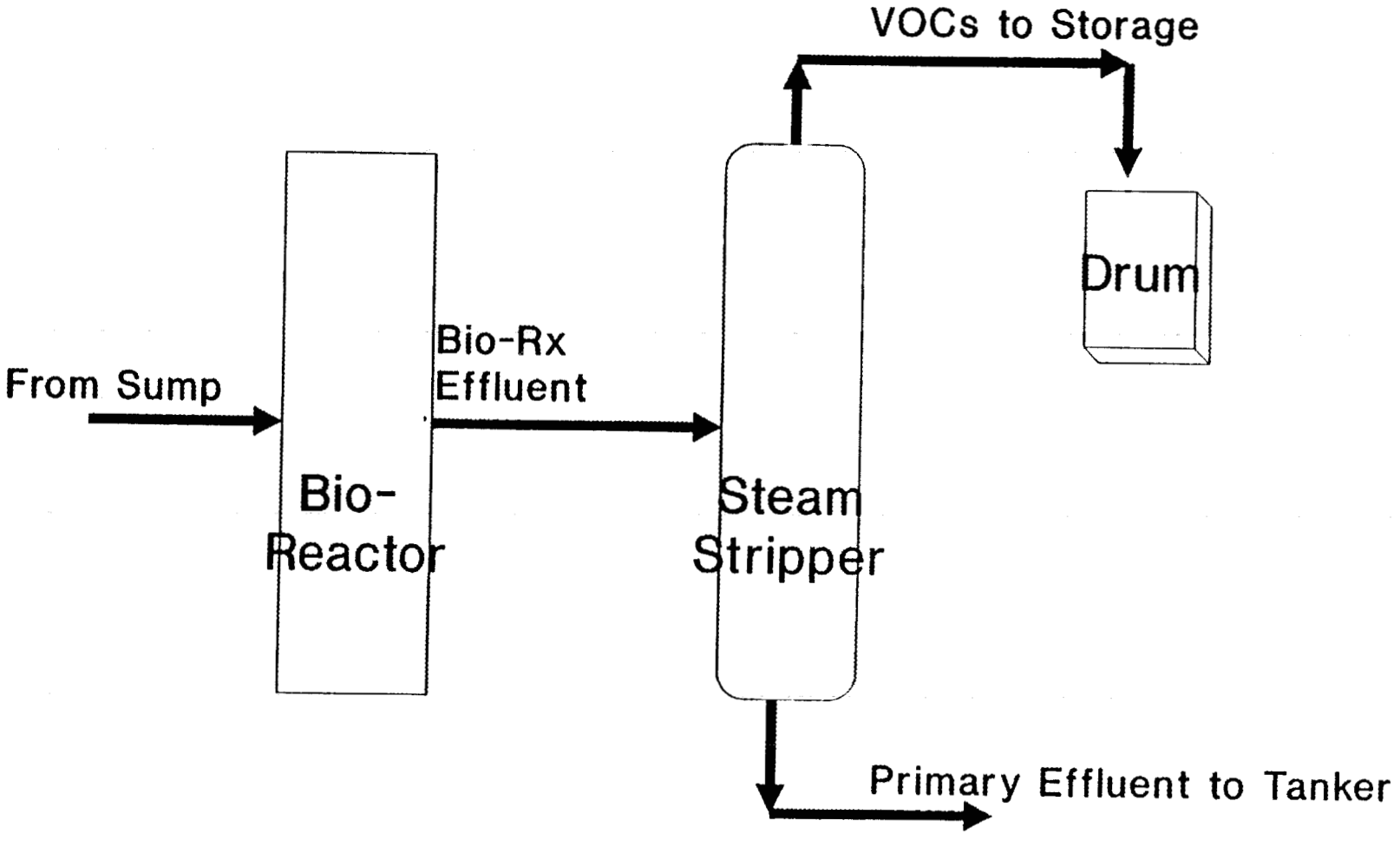

Table 3.1. Estimated Maximum Concentrations of Organic Materials in Effluent Water from Bioreactor System for the 3 Modes of System Operation

COMPOUNDS	CONCENTRATION (μg/L) MODE OF OPERATION*		
	1	2 and 3	
Volatiles	Primary Effluent	Primary Effluent	Secondary Effluent
Benzene	3	3	123,750
Chloroethane	2	2	79,200
Chloroform	-	-	2,475
1,1-Dichloroethane	38	38	1,881,000
1,1-Dichloroethene	5	5	262,350
1,2-Dichloroethane	-	-	15,345
Ethylbenzene	3	3	123,750
Methylene chloride	80	80	3,960,000
Tetrachloroethene	1	1	24,750
Toluene	7	7	321,750
Trans-1,2-Dichloroethene	10	10	470,250
1,1,1-Trichloroethane	46	46	2,277,000
1,1,2-Trichloroethane	-	-	20,790
Trichloroethene	3	3	123,750
Vinyl chloride	2	2	69,300
Semivolatiles			
2-Methylnaphthalene	44	44	------
4-Methylphenol	2	2	------
Acenaphthene	2	2	------
Anthracene	3	3	------
Dibenzofuran	1	1	------
Fluorene	2	2	------
Naphthalene	48	48	------
Phenanthrene	2	2	------

*Modes of Operation: (1) steam stripping of the groundwater, (2) iron removal by air oxidation, and (3) direct introduction of the groundwater to the bioreactors.

Table 3.2. Liquid Flowrates from Co-Metabolic Bioreactor Test

EFFLUENT FROM BIOREACTOR SYSTEM	
Mode 1 Primary Effluent	2.3 GPM
Mode 2 and 3 Primary Effluent	1 GPM
Mode 2 and 3 Secondary Effluent	0.1 GPM
Backwash of Iron Removal Filter for Mode 2 of Operation	0.025 GPM*

*Backwash requires 50 gal of water and automatically done after processing 2000 gal of water.

system; current plans call for a backwash after each 2000 gal of water treatment. Each backwash requires ~50 gal over a 15-min period. The maximum iron removal rate for a 1 GPM flow of water is estimated to be 155,000 μg/min. The iron concentration in the backwash solution is estimated to be 0.016 g/L. This backwash solution will also contain trace amounts of the original organic contaminants of the seep stream.

3.3 Off-Gas

The anticipated maximum off-gas flow rate is ~0.2 cfm; the composition will be >95% air, <5% methane, and trace amounts of TCE and other volatile organics. This stream will be vented to the air without treatment. Off-gas samples will be collected weekly and analyzed for volatile organics and other species under regulatory requirements.

3.4 Sludge

A chemical sludge, consisting of minerals (principally iron) removed from the feed water, will be produced in Mode 2. Biosludge may be produced from periodic flushing of the bioreactor.

4.0 WASTE STREAM MANAGEMENT

The expected chemical composition of the primary and secondary bioreactor effluent streams are compared with the CNF waste acceptance criteria in Table 4.1. The principal criterion of concern is Total Toxic Organics (TTO). The raw seep water exceeds the TTO criterion by more than 10-fold. The primary effluent stream will be reduced approximately 99% in TTO during operation of the bioreactor and steam stripper (both in pre- and post-treatment modes of operation); the TTO level thus is expected to fall well below the CNF criterion. The secondary effluent stream will exceed the TTO criterion by about

Table 4.1 Acceptance Criteria for Central Neutralization Facility (CNF) (mg/L) vs Maximum Expected Concentrations/Activities of Primary Effluent Streams to CNF

CONSTITUENT	CRITERIA*	SEEP**	MODE 1	MODE 2	MODE 3
Cadmium	2.6	.005	.005	.005	.005
Chromium	2.89	.02	.02	.02	.02
Copper	20.7	.02	.02	.02	.02
Lead	14.3	.04	.04	.04	.04
Nickel	17	.02	.02	.02	.02
Silver	1.2	.07	.07	.07	.07
Zinc	9.25	.04	.04	.04	.04
Cyanide	.65				
TTO***	2.13	24.9	.25	.25	.25
Oil/grease	26	2	2	2	2
TSS	270	51	51	51	51
Total α		4.9 pCi/L	4.9 pCi/L	4.9 pCi/L	4.9 pCi/L
Total β		8.9 pCi/L	8.9 pCi/L	8.9 pCi/L	8.9 pCi/L
Total γ		0	0	0	0
pH		6.3-7.3	6.3-7.3	6.3-7.3	6.3-7.3

*Waste Acceptance Criteria for the CNF Facility.
**Untreated ground water.
***Total toxic organics.

1000-fold. Waste management for these two streams, as well as for the other expected streams, are summarized below.

4.1 Primary Aqueous Effluent Stream

4.1.1 Collection

The primary aqueous effluent stream of the project will consist of a stream flowing at essentially the same rate as the withdrawal rate from the seep (a maximum of 2.3 gpm; Table 3.2). Following processing through the bioreactor system, this stream shall be collected in a 6300-gallon, 304-stainless steel tanker trailer.

The tanker trailer shall be located adjacent to the bioreactor demonstration trailer at the west side of the parking lot between buildings K-1098-D and K-1098-G. The tanker shall be positioned to allow access for the towing vehicle.

The tanker shall be inspected by the ORNL Garage and certified to meet all applicable (Department of Transportation (DOT) requirements (MC-312) prior to transport onto the K-25 Site. The tanker shall be inspected by a representative of the K-25 Waste Disposal Department prior to use for waste disposal.

The tanker location shall be designated a 90-Day RCRA Waste Storage Area. This 90 day storage area will be diked and have a volume of 6,300 gallons plus 5 inches of precipitation. The height of the dike will be a minimum of 17 inches. Any precipitation collected will be pumped from the diked area to the tanker and disposed of in the same manner as the treated effluent. The WCO shall be responsible for ensuring that the regulatory requirements of Waste Storage Area designation are met.

If, due to precipitation or other problems, the CNF collection sump cannot handle the tanker volume, the CNF operator will notify the project WCO.

4.1.2 Transport

The Demonstration Coordinator shall arrange with the Transportation Department of the K-25 Waste Management Division for a regular schedule for transport of the tanker to the CNF. Transport of the tanker to the CNF and return shall be the responsibility of the Waste Management Division.

Transport shall be contingent upon certification by the WCO that the wastewater meets CNF disposal criteria (discussed below).

4.1.3 Interim Storage

During transport of the tanker to the CNF and unloading of the wastewater, effluent shall be stored in a 1,500-gallon polyethylene tank at the demonstration site. The tank shall be placed within the diked 90 day storage area. Upon return of the tanker to the demonstration site, wastewater collected in the polyethylene tank shall be pumped into the tanker. The WCO shall conduct a weekly inspection of the tank.

4.1.4 Certification for Compliance with CNF Waste Acceptance Criteria

Samples shall be collected during effluent generation at times at which the tanker trailer is

approximately 25%, 50%, 75%, and 95% full. These samples shall be composited and analyzed for pH, dissolved oxygen, and conductivity. These analyses shall be used by the WCO to certify that the composition of the waste stream has not changed significantly since the beginning of the operational run.

4.1.5 Confirmatory Sampling and Analysis

During initiation of each of the three operating modes, samples will be collected in appropriate sampling containers (recommended by the K-25 Analytical Services Laboratory) from an effluent sampling port prior to introduction to the tanker. These samples will be collected at times at which the tanker trailer is approximately 25%, 50%, 75%, and 95% full. The samples will be composited, and will be preserved or refrigerated immediately upon collection according to standard K-25 Analytical Services procedures.

Samples will be analyzed by the K-25 Analytical Services Laboratory for the following parameters:

• Total alpha and beta activity	(Method: EPA-900)
• Total VOCs	(Method: EPA-8240)
• Total SVOs	(Method: EPA-8270)
• Total organic carbon	(Method: EPA-415.2)
• Total metals by ICP	(Method: EPA-6010)
• Total uranium	(Method to be determined)

The initial tanker load and every subsequent tenth tanker will be sampled and analyzed to confirm the continuing acceptability of the effluent stream to the CNF waste acceptance criteria.

4.2 Secondary Aqueous Effluent Stream

Under two modes of operation the bioreactor effluent will be recycled to the steam stripper for final treatment before disposal. This step will generate a secondary effluent, which is a low-flow stream containing relatively high concentrations of VOCs (Table 3.1). This stream will not meet the CNF waste acceptance criterion for TTO.

4.2.1 Collection

The secondary effluent stream shall be collected in a stainless steel 55-gallon drum located adjacent to the bioreactor trailer in a Satellite Waste Storage Area.

4.2.2 Certification and Disposal

The waste composition shall be estimated based on the known composition of the influent stream and the calculated concentration of VOCs based on the relative volumes of the primary and secondary effluent flows, and certified by the WCO.

The drum shall be sealed and packaged for on-site or off-site disposal as RCRA Hazardous Waste in accordance with the K-25 Site waste handling procedures. The WCO shall notify the K-25 PWDC to schedule waste pickup and disposal.

4.3 Backwash from Iron Removal Filter

4.3.1 Collection

During operation of the air oxidation system, the iron removal filter will be backwashed every 2000 gal. The backwash water will be pumped into the tanker and disposed of at the CNF, along with the primary effluent. The minerals in the backwash water are simply those removed from the seep water, and the concentration will not exceed the CNF waste disposal criteria.

4.4 Bioreactor Sludge

4.4.1 Collection

During the course of the bioreactor demonstration, it may become necessary to backflush biomass from the bioreactor to avoid clogging. If this step is required, process water will be flushed through the bioreactor and collected in a stainless steel 55-gallon drum. The drum shall be located in the Satellite Waste Storage Area (Section 4.21), and shall be placed in a sheet-metal spillage collection pan.

4.4.2 Certification and Disposal

A composite sample of the initial drum of backflush water shall be collected and analyzed by the K-25 Analytical Services Laboratory for the parameters described in Section 4.21. In addition, total suspended solids will be determined.

If the analyses indicate that the backflush, upon dilution in the tanker, will meet the CNF waste disposal criteria detailed in K/SS-538, the bioreactor backflush water will be pumped into the tanker and disposed of at the CNF along with the primary effluent. If addition of the bioreactor backflush water to the tanker will exceed the CNF criteria, then bioreactor the backflush water will be stored for appropriate disposal.

4.5 Rinse Water

During operation of the bioreactor demonstration, a small volume (at most several gallons per day) of process water will used in the sink installed in the trailer for rinsing sample collection bottles and for washing hands. This water will contain small amounts of detergent or soap. The water shall be collected in a 5-gallon polyethylene container located under the sink and shall be discharged directly to the tanker.

Due to the limited volume and known composition, no analyses shall be conducted on this wastewater stream.

APPENDIX F
NEPA COMPLIANCE

Each demonstration activity must have on record a DOE-signed EPA decision document, such as a Categorical Exclusion Determination (CXD), Finding of No Significant Impact (FONSI), or Record of Decision (ROD:). To obtain these NEPA documents, An EPA environmental assessment must be conducted and supporting NEPA documentation must be prepared.

To obtain the requisite documentation, the PM (1) contacts the Site Environmental Coordinator or the Site Regulatory Compliance Staff [for example, ORNL Environmental and Documentation Section (4-5774) or the ORNL Environmental Coordinator (4-5776)] AS EARLY AS POSSIBLE in the planning stages of a Demonstration Project; (2) provides a brief description of the project, including anticipated schedules for construction and/or operation; (3) provides for a site visit and supplies information for preparing the draft NEPA and supporting documents; (4) reviews each draft and transmits comments and/or corrections; and (5) as appropriate, endorses the documentation in concurrence with document contents. If the scope of the planned project changes significantly at any time prior to, or subsequent to, completion of the NEPA process, the PM repeats steps (1) through (5) for the modification.

Supporting documentation may consist of an Activities Description Memorandum (AcDM) or Environmental ALARA Memorandum (EAM) in support of a CXD; an Environmental Assessment (EA) in support of a FONSI; or an Environmental Impact Statement (EIS) in support of a ROD. No demonstration operations may be started without a DOE-approved and signed EPA decision document on file.

APPENDIX G

MARTIN MARIETTA ENERGY SYSTEMS, INC., OFF-SITE FACILITIES CONDUCTING TREATABILITY STUDIES CHECKLIST

I. FACILITY INFORMATION

NAME OF FACILITY: _____

LOCATION: _____

_____

COUNTY: _____

TELEPHONE: _____

CONTACTS: _____

_____

_____

DATE(S) VISITED: _____

REVIEWED BY: _____

_____

_____

II. FACILITY REVIEW - ADMINISTRATIVE ITEMS, TREATMENT SYSTEM, AND RECORDKEEPING

1. List facility staff interviewed and their duties:

_____

_____

_____

_____

2. Who owns the facility?

_____

3. Provide a brief description of facility activities:

_____

_____

4. Does the facility currently hold any permits and/or licenses (state or federal)? Check applicable items and obtain copies for review.

RCRA _____ Air _____
TSCA _____ POTW Agreement _____
NPDES _____ Others _____
Radioactive Materials License _____

5. Which office does inspections and enforcement, what is its address and phone number and who is the chief?

_____

_____

_____

5.1 How many times (and going back how far) has this facility been inspected?

_____

5.2 How often is the facility reinspected?

_____

5.3 Were inspection records reviewed?

_____

5.4 What problems have inspections revealed/identified?

_____

_____

_____

6. What is the compliance record like (going back five years)? List past and outstanding C.O.'s as well as types of violations found and penalties proposed vs collected.

_____

_____

_____

_____

7. EPA Identification Number [261.4(f)(2)]: _____

8. Provide a brief description of the treatment system(s) to be utilized.

_____

_____

_____

_____

9. Processing rate of treatment unit [261.4(f)(3)]: _____Kg/day.

NOTE: Must not exceed 250 Kg of "as received" waste in a single day.

10. Notification of Regional Administrator/State Director of intent to conduct treatability study [261.4(f)(1)]. Obtain copy of notification letter.

Date of Notification _____

11. Hazardous waste stream to be utilized in treatability study(ies):

    EPA Waste Code(s) _____

    Physical State: Solid _____
    Liquid _____
    Soils _____

    Acute Waste: Yes _____ No _____

    Quantity _____ (Kg)

12. Facility records verifying:

    Treatment rate limits [261.4(f)(3)]:

    Yes _____ No _____

    Note: Must not exceed 250 Kg of "as received" waste in single day.

    Waste in storage limits [261.4(f)(4)]}

    Yes _____ No _____

    NOTE: The quantity of "as received" hazardous waste stored at the facility for the purpose of evaluation in treatability studies does not exceed 1000 Kg, the total of which can include 500 Kg of soils, water, or debris contaminated with acute hazardous waste or 1 Kg of acute hazardous waste.

13. Documentation of treatability studies [261.4(f)(7)&(8)] should include:

    a) Name, address, and EPA identification number of waste generator.

    b) Date waste shipment received.

    c) Quantity of waste accepted.

    d) Quantity of "as received" waste in storage each day.

    e) Date treatment study initiated and amount of "as received" waste introduced to system each day.

    f) Date treatment study concluded.

    g) Date any unused sample or residues generated from treatment returned to generator.

    h) Copies of treatment study contracts.

    i) Copies of shipping documents.

14. Are all records maintained for at least 3 years?

    Yes _____ No _____

15. Does a mechanism exist for annual reporting to the regulatory agency [261.4(f)(9)]?

    Yes _____ No _____

16. Does the facility have a documented contingency plan in the event of unusual occurrences?

    Yes _____ No _____

17. What are facility security measures, i.e., prevention of unauthorized entry to storage/treatment areas?

    _____

    _____

    _____

18. Is there a documented training program for facility personnel?

    Yes _____ No _____

    18.1 Description of training:

    _____

    _____

    _____

    18.2 Trainer's qualifications:

    _____

    _____

19. What types of monitoring are utilized for radiation contamination control?

_____

_____

_____

19.1 What are the regulated and/or administrative radiation levels for on-site processing/storage?

_____

19.2 What are unrestricted release limits for waste treatment residuals?

_____

20. Does the facility have an accounting system which documents quantities of radioactive materials present at their site?

Yes _____ No _____

If yes, provide a description:

_____

_____

_____

21. Do procedures exist to prevent cross-contamination of waste materials while being processed? Describe.

_____

_____

_____

22. Does the facility have documented EH&S plans and/or procedures in place? Describe:

_____

_____

_____

23. Are waste analysis for verification of treatability studies performed at this facility?

Yes _____ No _____

23.1 Describe sampling tracking system:

_____

_____

_____

23.2 Describe waste analysis recordkeeping practices:

_____

_____

_____

23.3 Specify verification test methods and equipment:

_____

_____

_____

23.4 What are the analytical QA practices (e.g., frequency of recalibration, control charts, spikes)?

_____

_____

_____

23.5 Is the laboratory certified by an outside organization?

_____

23.6 Overall impression of lab organization and quality:

_____

_____

_____

24. Waste Storage Area:

Warning signs _____

Containment _____

Secured _____

Indoors/Outdoors _____

Other comments _____

APPENDIX H

ENVIRONMENTAL REVIEW SUMMARY

Project Title _____

Type ERDS Document _____ Document Preparer _____

Task Leader _____ Account or Work Order No. _____

ERDS ID No. _____ Computer Code _____ Est. Start Date _____

Project Status - Ongoing _____ New _____ Proposed _____ Other _____

Project Location - Plant _____ Valley _____ Bldg. _____ Room _____ Other _____

FY 19 ____ Program _____ Program Code _____

Division/Office _____

Projects/Activities _____

Div. Director _____ Bldg/MS/Phone No. _____

Proj. Engineer _____ Bldg/MS/Phone No. _____

Div. Rep. _____ Bldg/MS/Phone No. _____

Supv. of Oper. _____ Bldg/MS/Phone No. _____

LineItem/WBS/ESO/ADSNo. _____

CXD or PDM Required? _____ Planned Submittal Date _____

Briefly describe the project, including its purpose. _____

_____

_____

_____

_____

_____

_____

_____

_____

_____

_____

Are any of the following encountered, handled, stored, used, or disposed of during any phase of the project? Describe.

Y N U Radioactive Materials _____

Y N U Hazardous Materials _____

Y N U Mixed (Haz. and Rad. Materials) _____

Y N U Toxic Materials _____

Y N U PCBs _____

Y N U Oils or Oily Wastes _____

Y N U Asbestos _____

Y N U Organic Chemicals _____

Y N U Heavy Metals _____

Y N U Other _____

Does the project involve disposal or discharge into any of the following liquid waste collection and/or treatment systems? If yes, estimate quantity and describe.

Y N U Low-Level Waste _____

Y N U Process Waste _____

Y N U Sanitary Waste _____

Y N U Storm Sewer _____

Y N U Other _____

Does the project generate solid wastes? If yes, estimate amounts and describe disposal.

Y N U Radioactive _____

Y N U Hazardous _____

Y N U Mixed _____

Y N U Sanitary _____

Y N U Other _____

Does the project generate airborne wastes? If yes, estimate amounts and describe.

Y N U Radioactive _____

Y N U Hazardous or Toxic _____

Y N U Mixed _____

Y N U Other _____

Does the project utilize above-ground tank or drum storage of any materials? If yes, estimate amounts and describe storage.

Y N U Radioactive _____

Y N U Hazardous or Toxic _____

Y N U Mixed _____

Y N U Other _____

Does the project utilize below-ground equipment, facilities, or tanks for storage, control, or transport of materials? If yes, estimate amounts and describe.

Y N U Radioactive _____

Y N U Hazardous or Toxic _____

Y N U Mixed _____

Y N U Other _____

Are uncontrolled emissions, discharges, or spills possible during any phase of the project? If yes, estimate amounts and describe.

Y N U Radioactive _____

Y N U Hazardous or Toxic _____

Y N U Mixed _____

Y N U Other _____

Are measures in place to prevent uncontrolled emissions, discharges, and/or spills? Describe.

_____

_____

_____

_____

_____

Does any portion of the project require permitting? Describe.

_____

_____

_____

_____

Does the project involve disturbance of any area on which an endangered or threatened species might be present? If yes, explain protective measures that will be taken.

_____

_____

_____

_____

Does the project involve disturbance of any site containing objects of historical significance? If yes, explain protective measures that will be taken.

_____

_____

_____

_____

Will any portion of the project take place within the 100-year floodplain of any surface waterway?

_____

_____

_____

_____

Will the proposed project utilize a new site or sites? If yes, will the site(s) be restorable when all project activities have been completed?

_____

_____

_____

_____

APPENDIX I

EXAMPLE OF SAFETY ASSESSMENT

K/D-SA-2156
W.O.: A-3204A-J1
Date: 5/6/91

APPROVALS

SAFETY ASSESSMENT

Co-metabolic Bioreactor Demonstration
at the Oak Ridge K-25 Site

H F Hartman for — 5-9-91
B. A. Hannaford — Date
System Safety Engineering - Technical Products

H F Hartman for — 5-9-91
J. A. Hoffmeister — Date
System Safety Engineering-K-25 Site Coordinator

C.H. Brown Jr. for T.L. Donaldson — 5-10-91
T. L. Donaldson — Date
Technical Lead

5/10/91
W. I. Morris — Date
Project Coordinator

S. E. Herbes — 5/10/91
S. E. Herbes — Date
Principal Investigator

C. H. Peterson, Chairman — Date
K-25 Site Environmental, Health & Safety Council

C. C. Watson — Date
K-25 Site Facility Safety Manager

K/D-SA-2156
A-3204A-J1

SAFETY ASSESSMENT

Co-metabolic Bioreactor Demonstration at the Oak Ridge K-25 Site

M. B. Andriulli

May 6, 1991

System Safety Engineering

MARTIN MARIETTA ENERGY SYSTEMS, Inc.
Oak Ridge, Tennessee

Prepared for the U. S. Department of Energy
Under U. S. Government Contract DE-AC-05-84OR21400

SAFETY ASSESSMENT

Co-metabolic Bioreactor Demonstration
at the Oak Ridge K-25 Site

1. INTRODUCTION

The purpose of the co-metabolic bioreactor demonstration project is to demonstrate the effectiveness of bioremediation technologies, based on co-metabolic processes, for treatment of groundwater contaminated by mixed organic solvents. The project consists of installation and operation of two types of bioreactors. Groundwater contaminated with mixed organic compounds from a seepage flow at the K-25 Site will be used as influent. The seepage flow contains trichloroethene (TCE), perchloroethene (PCE), benzene, toluene, chlorinated ethanes, and other volatile organic solvents at a total concentration of several parts per million. Since the seepage water is currently discharged by National Pollutant Discharge Elimination System (NPDES) permit, it is not considered in the hazard analysis. Effluent will be collected and transported to a licensed treatment facility.

Experimental studies of the microorganisms have not revealed any known pathogens, and past experience has indicated that conditions are not conducive to the development of pathogens. However, since the pathogenic dangers are unknown at this time, for purposes of this safety assessment it is assumed that the microorganisms are pathogenic. Evaluations will be performed, using standard techniques, on all cultures proposed for use in the bioreactors, on the raw seep water and on the bioreactor effluent.

The K-25 Site is on the National Priority List, and thus falls under the jurisdiction of both the Comprehensive Environmental Response, Compensation, and Liability Act (CERCLA) and Department of Energy/Environmental Protection Agency (DOE/EPA) Interagency Agreements. These regulations require consideration of alternatives for remediation. This demonstration project will help evaluate the usefulness of bioremediation as a technology for solving groundwater contamination problems.

The operation of this demonstration project is the responsibility of the Oak Ridge National Laboratory (ORNL) Environmental Sciences Division. Much of the field operational work will be conducted by staff of the ORNL Chemical Technology Division. Other divisions involved in some aspects of the project are the K-25 Health, Safety and Environmental Affairs Division and the Environmental Restoration Division.

This safety assessment addresses the hazards associated with the operation of the Co-metabolic Bioreactor Demonstration Project at the Oak Ridge K-25 Site.

2. SUMMARY

The Co-metabolic Bioreactor Demonstration Project consists of installation and operation of two types of biological treatment systems using groundwater contaminated with mixed organic compounds from a seepage flow at the K-25 Site as influent. The goal of the project is to demonstrate the effectiveness of two innovative bioremediation technologies, based on co-metabolic processes to remediate groundwater contaminated by mixed organic solvents.

The primary hazard associated with the project is the presence of the microorganisms. Experimental studies of the microorganisms have not revealed any known pathogens, and past experience has indicated that conditions are not conducive to the development of pathogens. However, since the pathogenic dangers are unknown at this time, for purposes of this safety assessment it is assumed that the microorganisms are pathogenic.

The hazards presented by the toxic and radioactive materials in the raw seepage water used as influent are not considered in the analysis, since they are currently discharged by NPDES permit. The hazard presented by the use of 3% methane mixed with air was determined to be a standard industrial hazard, provided that requirements are included in the operating procedures to assure that the quantity of methane in the air/methane mixture is below the lower flammability limit in air of 5.3%. All other hazards involved in the project are determined to be standard industrial hazards.

The worst case accident scenario postulates a spill of the entire fluid contents of the bioreactor during transfer from the reactor to the container used for transport to the treatment facility. This results in a release of unsterilized effluent (microorganisms are assumed to be pathogenic). This is assumed to flow into the storm drain. The effluent eventually flows to the Clinch River (Watts Bar Lake) where drinking water supplies could become contaminated. It was determined that individual wells would not be in jeopardy since the hydraulic gradient of

the groundwater is expected to be toward the river. The source of drinking water for the K-25 Site is about 2.5 miles upstream from the point of entry of the effluent to the Clinch River, and should not be affected. The cities which extract drinking water from Watts Bar Lake should not have their supplies affected since they are well away from the main flow and far enough downstream for the concentrations to be diluted to levels within the regulatory limits for coliform bacteria. Coliform bacteria are used as indicator organisms for microbial contamination in drinking water.

Based on the results of the hazard screening, it is recommended that this facility be considered a generally accepted hazard facility for purposes of design and safety documentation. A generally accepted hazard facility requires no further safety documentation. However, requirements should be included in the operating procedures to assure that the methane content in the methane/air mixture tanks is maintained below the lower flammability limit in air of 5.3%.

3. SITE DESCRIPTION

The co-metabolic bioreactor demonstration facility will be located in the eastern portion of the K-25 site as close to the seep as possible. The seep, which will serve as influent, is located adjacent to the east side of Avenue D, about 110 feet south of the center of the intersection with 9th Street and about 200 feet west of the boundary of the K-1070-C/D Classified Burial Ground. Location of the facility at the K-25 Site is shown in Fig. 3.1.

4. FACILITY/PROCESS DESCRIPTION

Groundwater contaminated with organic compounds is a problem at many DOE sites. One of the new technologies for removal of these contaminants from groundwater is bioremediation, both by above-ground, contained units (i.e., bioreactors) and by in situ techniques. Bioremediation techniques employing two general groups of microorganisms [methanotrophs (methane-utilizers) and toluene-utilizers] are presently being investigated for TCE removal. Both are based on co-metabolic degradation (i.e.,fortuitous degradation) of the target contaminants (volatile organic solvents) by organisms which are utilizing a carbon source (methane or toluene) as a primary energy source.

The work proposed will consist of comparative demonstration of bioreactors with two types of microbial systems (i.e., methane-utilizers and toluene-utilizers) using groundwater contaminated with organic compounds which emerges as a seepage flow at the K-25 Site. The seepage flow contains TCE, PCE,

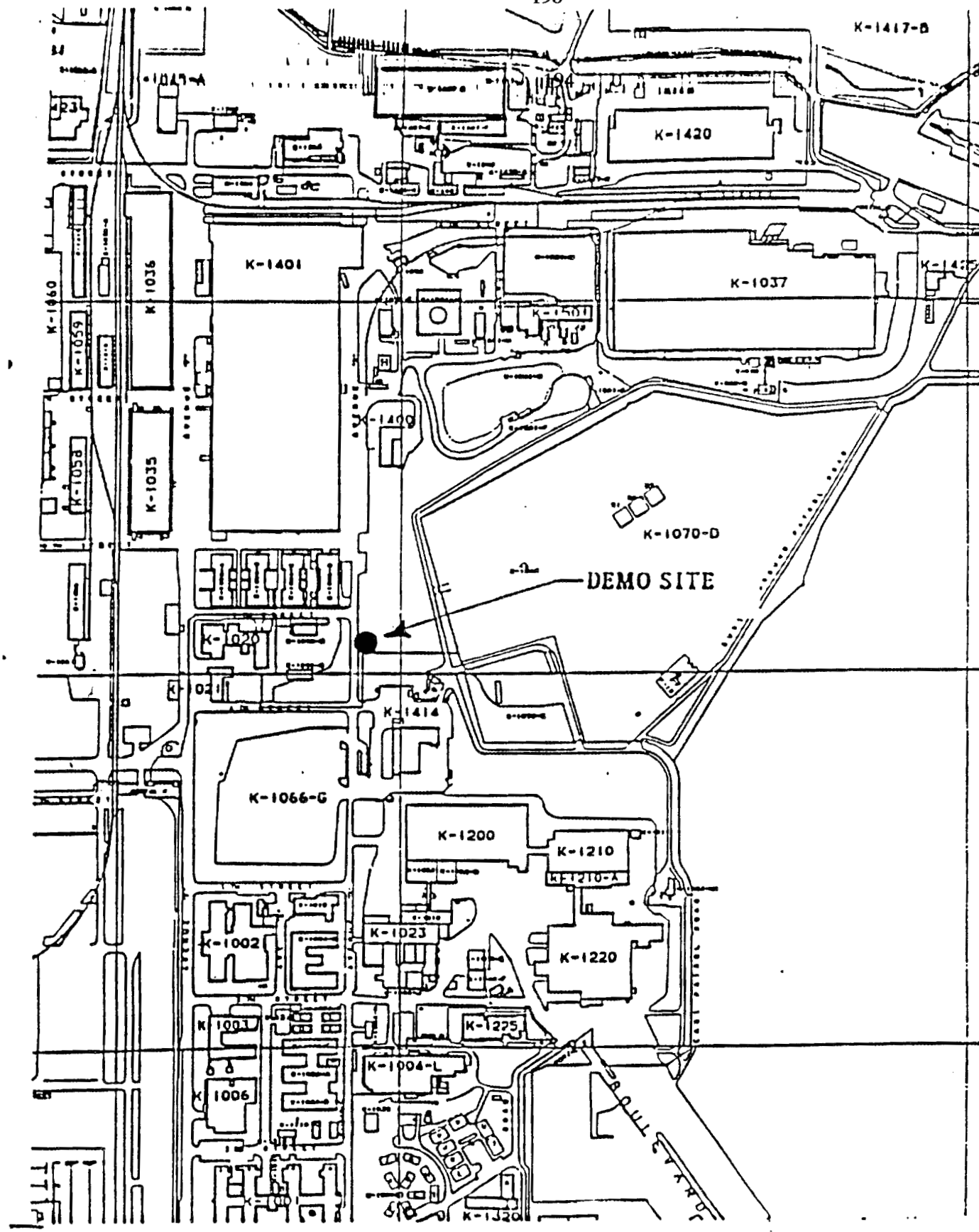

Fig. 3.1. Location of the proposed Co-metabolic Bioreactor Demonstration Project at the K-25 Site.

benzene, toluene, chlorinated ethanes, and other volatile organic solvents at a total concentration of several parts per million (ppm).

4.1 FACILITY DESCRIPTION

The co-metabolic bioreactor demonstration project will consist of operation of two bioreactor units. During the first phase of the project a single bioreactor unit with the methanotrophs will be operated. During the second phase a bioreactor unit charged with the toluene-utilizers or one bioreactor unit of each type will be operated. Each unit will consist of:

- piping from the seep to the bioreactor unit,
- an influent pump and associated valving and controls,
- a pretreatment filter, air oxidation unit (aeration tank), steam stripper or another pretreatment option if needed,
- the bioreactor,
- up to five standard 300-ft^3 compressed gas cylinders for the carbon substrate (3% methane in air) or a 55-gallon drum containing dilute aqueous toluene solution,
- a 55-gallon drum for the nutrient feed solution (a dilute aqueous solution of ammonium phosphate plus trace minerals),
- an off-gas scrubber (if required by the air discharge permit),
- piping and valving for operation in recycle mode,
- piping and containers for the collection of effluent, and
- safety monitoring instrumentation and process controls.

Two skid-mounted bioreactor units, each consisting of two columns (approximately 12 inches diameter by 7 feet high) plus associated plumbing, pumps, and control panel will be used. A conceptual diagram of the methanotroph bioreactor system is shown in Fig. 4.1.

The two skid-mounted units with associated tanks and equipment will require protection from inclement weather, and will be housed in a van trailer. The bioreactor will serve as

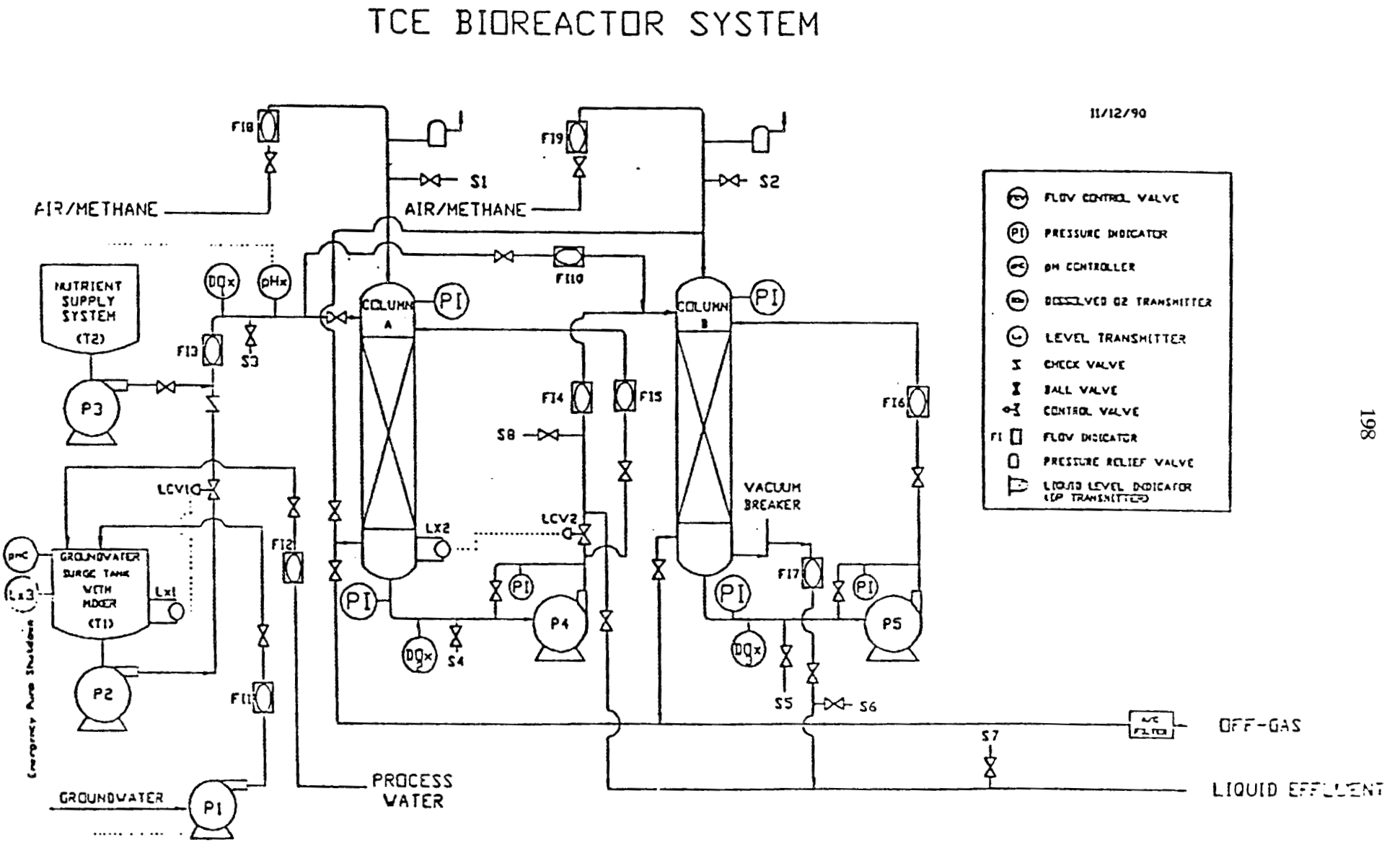

Fig. 4.1. Flow diagram of the Methanotrophic Bioreactor System.

the primary confinement. A drip pan beneath each skid-mounted bioreactor unit within the trailer will serve as secondary confinement.

The utilities required by the facility are process water with a maximum flow rate of 1 gal/min (3.79 L/min) for preparation of nutrient solutions and general equipment washing and flushing; an electrical supply of 220 V ac and 50 A, 3 phase; compressed air at 50 psig; and low pressure process steam if steam stripper pretreatment is selected.

4.2 PROCESS DESCRIPTION

The bioreactor systems operate on the principle of co-metabolic degradation of TCE and associated contaminants. Microorganisms are grown in the bioreactor in the presence of oxygen and nutrients, with an added carbon source. Methane will be used as the carbon source in one of the bioreactors and toluene will be used in the other. Degradation of TCE occurs fortuitously during utilization of the carbon source. The effluent produced should have lower concentrations of the initial volatile organic contaminants (VOCs) and some added constituents.

4.2.1 Influent

The seep which will serve as influent to the bioreactor currently flows from a PVC pipe imbedded at the foot of a 6-ft high slope and drains through an open concrete channel along the road into a storm drain (SD-180-04) approximately 80 feet north of the seep. The storm drain eventually empties into Poplar Creek and then into the Clinch River. A NPDES permit is currently held which allows this discharge. During the past spring and summer (1990) base flow from the seep has appeared to be relatively constant. Flow increases during and immediately following storms and reportedly has stopped completely during extended dry periods. Chemical characteristics, determined on water samples, are summarized in Table 4.1.

Table 4.1 Contaminants Detected in Storm Drain SD-180-04 at the K-25 Facility

Compound	Concentration (μg/L)			
	May-June 1987		March 1990	
	Maximum	Minimum	Maximum	Minimum
Volatiles				
Benzene	250	230	1300	1200
Chloroethane	160	<10	**	**

Table 4.1 (Continued) 9

Compound	Concentration (µg/L)			
	May-June 1987		March 1990	
	Maximum	Minimum	Maximum	Minimum
Chloroform	5	<5	**	**
1,1-Dichloroethane	3800	2300	1000	998
1,1-Dichloroethene	530	250	640	510
1,2-Dichloroethane	31	<5	810	580
Methylene chloride	8000	1900	460	160
Tetrachloroethene	50	<5	67	<25
Toluene	650	440	3100	2700
Trans-1,2-Dichloroethene	950	670	**	**
1,1,1-Trichloroethane	4600	3000	6800	4900
1,1,2-Trichloroethane	42	<5	33	<25
Trichloroethene	250	140	430	330
Vinyl chloride	140	<10	**	**
Semi-volatiles				
2-Methylnaphthalene	44	*	44	*
4-Methylphenol	2	*	**	**
Acenaphthene	2	<5	3	2
Anthracene	3	2	**	**
Dibenzofuran	1	*	3	2
Ethylbenzene	250	190	430	310
Fluorene	2	2	4	3
Naphthalene	48	14	130	93
Phenanthrene	2	<5	5	4
Nonspecific Parameters				
Oil and Grease	2000	<2000	--	--
Alpha Activity	4.9 pCi/L	<2 pCi/L	1 pCi/L	<1 pCi/L
Beta Activity	8.2 pCi/L	<2 pCi/L	**	**

Table 4.1 (Continued) 10

Compound	Concentration (μg/L)			
	May-June 1987		March 1990	
	Maximum	Minimum	Maximum	Minimum
Alkalinity	301 mg/L	254 mg/L	--	--
Chemical Oxygen Demand	52 mg/L	<5 mg/L	--	--
Conductivity	767 μmho/cm	679 μohm/cm	--	--
Dissolved Oxygen	3.6 mg/L	1.5 mg/L	--	--
Hardness	321 mg/L	290 mg/L	--	--
Iron	41 mg/L	32 mg/L	--	--
pH	7.3	6.3	--	--
Temperature	17°C	15°C	--	--
Total Organic Carbon	24.9 mg/L	12.3 mg/L	--	--
Total Dissolved Solids	498 mg/L	380 mg/L	--	--
Total Suspended Solids	51 mg/L	16 mg/L	--	--

* Only one analysis performed.

** Not reported.

4.2.2 Pretreatment of Influent

Since iron and other minerals may precipitate in the aerobic environment of the bioreactor, the seepage water may need to undergo pretreatment. The pretreatment will consist of a filter, an air oxidation unit (aeration tank), steam stripper or another pretreatment option.

In the steam stripping process some of the incoming water is volatilized, and the VOCs are carried with the water vapor out of the steam stripper. These vapors are fully condensed creating a small volume of aqueous feed to the bioreactor. This small volume of liquid which flows to the bioreactor is a fraction (≈10%) of the raw water flow to the steam stripper. The VOCs are at a higher concentration than in the raw water, which will lead to better reaction kinetics in the bioreactor. The liquid effluent from the bioreactor is recycled back to the steam stripper so that remaining VOCs are not discharged from the process. The treated water discharged from the steam stripper contains all the non-volatile constituents. Iron and other minerals are excluded from the bioreactor. This effluent exits

the bottom of the stripper and will be collected and taken to a licensed treatment facility.

4.2.3 Nutrients

Nutrients are added to the influent to promote the metabolism of the microorganisms. As the microorganisms consume the added carbon source and nutrients, they also consume contaminants in the influent. The required amounts of nutrients to be added will depend on the nutrient levels present in the influent, the pretreatment process and the results of experimental studies to evaluate nutrient requirements of several potential cultures. The worst case nutrient requirements, which would occur if the pretreatment process removes all the existing nutrient minerals from the feed water, would necessitate the addition of the nutrient concentrate diluted to approximately 1:100. A maximum of 50 gallons (190 L) of the nutrient concentrate, which is given in Table 4.2, will be maintained at the site. Negligible consumption will occur in the bioreactor, so the effluent water will have about a 1:100 dilution of the nutrient concentrate. If the steam stripping pretreatment is used, the bioreactor effluent will be further diluted to a concentration of about 1:400 when it is recycled to the steam stripper and mixed with the incoming raw water. No limits are given in water quality standards for the compounds contained in the nutrient concentrate.

Table 4.2 Concentrations of Nutrients Added to the Seep Water Influent to Bioreactors

Constituent	Nutrient Mineral Salts Concentration (mg/L)	Incremental Concentration Increase* (mg/L)
$MgSO_4.7H_2O$	10	0.1
$CaCl_2$	5	0.05
KNO_3	2000	20
NH_4Cl	200	2
$FeCl_3$	0.5	0.005
KH_2PO_4	2000	20
Trace elements**	10	0.1

* Incremental increase in concentration over existing seep water levels.

** HBO_3, $CoCl_2.6H_2O$, $MnSO_4$, $ZnCl_2$, $CuCl_2.2H_2O$, and $Na_2MoO_4.2H_2O$. Concentration figures given are total of all added trace elements.

4.2.4 Bioreactor

Each influent batch is treated in the bioreactor for approximately one hour. During this time the microorganisms are not suspended in the solution, but are attached to a substrate in the column. In terms of the entire volume of the bioreactor the concentration of the microbial component is about 100 g/L. The mixed culture of ten to twenty different bacteria will be dominated by methanotrophs in one bioreactor system and by toluene-utilizers in the other. A small number of the microorganisms will become detached from the substrate and will pass from the bioreactor with the effluent.

4.2.5 Effluent and Waste Disposal

The treated bioreactor effluent (1 gal/min maximum flow rate) will contain the same volatile organics as the untreated seep water (although decreased in concentration due to microbial degradation) and some added constituents. Added constituents will include dissolved methane, microorganisms washed from the bioreactors (≈10 mg/L), nutrients and trace metals added to the influent to support microbial metabolism and incompletely removed by the microorganisms, and by-products of the microbial degradation. The by-products consist of carbon dioxide and water. Chlorine in trace amounts may also be a by-product.

Experimental studies of the microorganisms have not revealed any known pathogens, and past experience has indicated that conditions are not conducive to their presence (i.e., The selective pressures of the methane and the halogenated solvents do not favor known pathogens). However, pathogenic dangers, if any, have not been identified and are unknown at this time. An evaluation will be performed, using standard techniques, on all cultures proposed for use in the bioreactors and on the raw seep water. During operation of the bioreactor samples of the culture and the effluent will be taken periodically and analyzed by the same techniques to determine if any known pathogens have appeared.

Effluent will be collected and transported to a treatment facility within the K-25 Site or at ORNL.

In the event that the steam stripper pretreatment is used, the bioreactor effluent will be recycled to the steam stripper (Section 4.2.2). Microorganisms which detach from the biofilms and become part of the effluent will remain in the water which is discharged from the steam stripper. This water will also be collected and transported to a treatment facility.

The expected off-gas flow rate is 0.2 cfm. Constituents will include methane (approximately 0.01 cfm) and trace

concentrations of TCE and other VOCs. If allowed by K-25 air permit stipulations, the off-gas will be vented directly to the atmosphere. Samples will be collected and analyzed for VOCs and radioactivity on a regular basis to ensure compliance with K-25 air permit limitations.

A chemical sludge, consisting of precipitated iron, may be produced if chemical pretreatment of the influent is required. The quantity of sludge produced is unlikely to exceed 1 lb/day (454 g).

The bioreactors may require periodic flushing to remove biosludge. The expected volume to be produced is 5 ft^3 (0.14 m^3) or less for the duration of the demonstration project (approximately 8 months).

Waste sludge or biosludge will be analyzed to determine if it contains radioactive and/or hazardous materials. Appropriate disposal methods will be used.

5. HAZARD ANALYSIS

The hazards associated with co-metabolic bioreactors are the potential and kinetic energies involved with the operation of the bioreactors (i.e., pumps, steam, electrical power, etc.), and the presence of mixed organic solvents, radioactive materials, bacterial organisms and flammable/explosive materials.

This will be a small scale operation and the potential and kinetic energies involved with the operation can be considered standard industrial hazards, which require no further analysis. The pumps will have a low flow capacity of approximately 1-gal/min, the steam will be low pressure process steam, and the electrical needs will be 220 V ac, 50 A, 3 phase, or typical industrial power.

The mixed organic solvents and any radioactive materials present in the raw seep water will not be considered in this hazard analysis. These materials are currently being discharged with a NPDES permit and a hazard analysis is not necessary at current or lower concentrations.

In the laboratory tests the volatile organic contaminant for which the process will be optimized, trichloroethene (TCE), has been reduced by approximately 50% in the effluent. It is expected that this will also be the case in the demonstration project.

There will be up to five 300-ft^3 cylinders of 3% methane in air with pressures of about 3000 psig manifolded together. Methane is a non-toxic flammable/explosive compound which has a

lower flammability limit in air of 5.3% and a lower detonability limit in air of 6.3%.[1] Since a 3% mixture of methane and air will be used, this can be considered a standard industrial hazard, with no further analysis necessary, provided requirements are included in the operating procedures to assure that the quantity of methane in the air/methane mixture is below the lower flammability limit in air of 5.3% [i.e., quality assurance (QA) on purchase/use of cylinders].

The bacterial organisms will be analyzed as described below. It is assumed in the hazard analysis that the microorganisms are pathogenic, although experimental studies of the microorganisms have not revealed any known pathogens, and it is expected that none will appear.

5.1 HAZARD LEVEL SCREENING

5.1.1 Accident Scenarios

Two accident scenarios have been determined which will release microorganisms. These are: (1) catastrophic failure of a bioreactor, and (2) failure of equipment used to transfer effluent to containers for transport to a treatment facility.

Although the largest release of microorganisms would occur if there were a catastrophic failure of a bioreactor, this is not the worst case release. Approximately 35 gal (133 L) of fluid from the bioreactor would be released into the trailer. Since most of the microorganisms will remain attached to the substrate, the fluid released will contain about 25 g/L of microorganisms. Without taking credit for the drip pans beneath each bioreactor unit, it is not likely that any fluid would spill to the outside because the trailer has a large floor area (≈8 ft x 47 ft). Even assuming the fluid all spilled to the outside of the trailer, the concentration of the microorganisms which may reach a user as drinking water would be many times diluted before reaching any drinking water supplies. The fluid would spread out over an area of ground and infiltrate the soil. As the infiltration took place, many microorganisms would be filtered out of the fluid. The microorganism population would also be diminished due to a decrease in food supply, available oxygen and temperature. By the time any fluid reached the groundwater, the number of organisms would be substantially reduced. Further filtration and dilution would occur in the groundwater before reaching any drinking water supplies.

The second accident scenario assumes that transfer equipment fails while the reactor contents are being transferred to containers for transport to a treatment facility. This results in a release of approximately 35 gal (133 L) of fluid containing about 10 mg/L of microorganisms. It is further assumed that the

release flows directly into the storm drain. The storm drain empties into Poplar Creek or one of the small creeks that feed Poplar Creek and then into the Clinch River (Watts Bar Lake) where drinking water supplies could be affected.

5.1.2 Consequence Determination for Scenario Two

5.1.2.1 On-site at the Co-metabolic Bioreactor Facility and at Nearby Facilities

Drinking water supplies at the K-25 Site are not at risk since they come from the Clinch River, about 2.5 miles upstream of the confluence with Poplar Creek. A release of effluent would affect operating personnel and personnel at nearby facilities only if the effluent is ingested. It is highly unlikely that any on-site personnel would drink from the storm drain or on-site streams, so a release is considered to have no on-site consequences.

5.1.2.2 Off-site

Drinking water supplies downstream of a release would be obtained from individual wells and from municipal supplies. The hydraulic gradient of the groundwater tapped by the individual wells tends to be toward the river, (groundwater boundaries tend to follow the watershed boundaries[4]) therefore the wells should not be contaminated by the effluent.

The closest cities which draw water from Watts Bar Lake are Harriman, Kingston, and Rockwood. The Harriman water plant is on the Emory River 12.8 miles upstream from the confluence of the Emory and Clinch Rivers; the Kingston plant is on the Tennessee River approximately one-third mile upstream from the mouth of the Clinch River; and the Rockwood plant is in a cove of the lake approximately 2.25 miles from the main stream and 15 miles downstream from the mouth of the Clinch River. Thus, the water supplies to these cities should be unaffected, since the stream flow in these areas would tend to keep the effluent away. On occasion, when the lake levels rise, some back flow can be expected. This could cause effluent to reach the inlet to water treatment plants. Effects on the public would then depend on the concentration of the microorganisms in the water.

The concentration of the microorganisms in the water can be determined from the amount released and the amount of dilution which takes place before reaching any drinking water supply. The 35-gal (133 L) of effluent, which has a microorganism concentration of approximately 10 mg/L, is released at a maximum rate of 1 gal/min (3.79 L/min). No dilution is assumed between the entry point into the storm drain and Poplar Creek.

The individual microorganism cell can be assumed to be approximately spherical in shape with a diameter of about 2 microns. The density of the cells is approximately equal to the density of water (998 mg/ml @ 20°C). At a mass concentration of 10 mg/L this is approximately 2.39×10^6 cells/ml.

The effluent flow rate of 1 gal/min is equivalent to 2.23×10^{-3} cfs. The mean flow rate in Poplar Creek at the effluent point of entry is approximately 283 cfs. The dilution factor, based on the two flow rates, is 1.27×10^5. The dilution factor of 17.3 at the confluence of Poplar Creek and the Clinch River is based on average flow rates of 292 cfs and 4763 cfs, respectively. The resulting concentration in the Clinch River at the mouth of Poplar Creek then would be 1.09 cells/ml. The dilution factor at the confluence of the Emory and the Clinch Rivers is 3.95, and at the confluence of the Clinch and the Tennessee Rivers is 3.89. These are based on average flows for the rivers. Therefore, when the 35-gal of effluent reaches the Tennessee River, the concentration is estimated to be 0.071 cells/ml or 7.1 cells per 100 ml. Dilution also occurs in the streams and rivers as the effluent proceeds downstream. Other factors which cause a decrease in the numbers of the microorganisms include sedimentation, decrease in food supply and below optimum stream temperature. In addition, water used for a municipal drinking water supply is treated before being released for consumption.

5.1.3 Discussion of Results and Hazard Level Determination

EPA drinking water standards for maximum contaminant levels (MCLs) of microbiological contaminants are based on fecal coliform bacteria as an indicator organism. The maximum number of coliform bacteria allowed in the drinking water regulations is 1 per 100 ml as the arithmetic mean of all samples examined per compliance period; 4 per 100 ml in one sample when less than 20 are examined per month; or 4 per 100 ml in more than 5% of the samples when 20 or more are examined per month.[2] This compares with the estimated value of 7.1 cells per 100 ml. To put this into perspective, a number of militating factors exist for which no credit has been taken:

- The microorganisms are not likely to be pathogenic, as assumed.
- Attrition of the microorganisms will occur as a result of sedimentation, loss of nutrients, and unfavorable temperatures.
- Drinking water standards have been invoked, although potential receptors are almost universally protected by existing water treatment plants.

Any effect of a spill will be transient.

Based on the above analysis there should be no effects to on-site personnel either at the facility or at nearby facilities, and there should be negligible or no effect on the public from an accidental release of unsterilized effluent from the bioreactor demonstration project.

Based on the results of the hazard screening, it is recommended that this facility be considered a generally accepted hazard facility for purposes of design and safety documentation. A generally accepted hazard facility requires no further safety documentation. However, requirements should be included in the operating procedures to assure that the quantity of methane in the air/methane mixture is maintained below the lower flammability limit of 5.3%.

6. REFERENCES

1. J. Hord, 1976, Is Hydrogen Safe?, PB-262-551, NBS-TN-690, National Bureau of Standards, Department of Commerce, Washington, D. C.

2. Code of Federal Regulations, Title 40, Protection of Environment, Part 141, National Primary Drinking Water Regulations, Section 14, Maximum Microbiological Contaminant Levels.

3. RCRA Facility Investigation Plan, K-1070-C/D Classified Burial Ground, Oak Ridge Gaseous Diffusion Plant, Oak Ridge, Tennessee, Report No. K/HS-140, Appendix B, Revision 1, May 1989.

4. Warren Viessman, Jr., Gary L. Lewis, and John W. Knapp, Introduction to Hydrology, Harper & Row, Publishers, New York, New York, 1989.

APPENDIX J

EXAMPLE OF HEALTH AND SAFETY PLAN

Co-Metabolic Bioreactor Demonstration at the Oak Ridge K-25 Facility

Prepared by the
Oak Ridge National Laboratory
Oak Ridge, Tennessee 37831

Managed by
MARTIN MARIETTA ENERGY SYSTEMS, INC.
for the
U.S. DEPARTMENT OF ENERGY
under contract DE-AC05-84OR21400

APPROVALS

Health and Safety Plan
Co-Metabolic Bioreactor Demonstration

H. L. Jennings, Operating Engineer
Chemical Technology Division

8/1/91
Date

T. L. Donaldson, Task Leader
Chemical Technology Division

8/1/91
Date

S. E. Herbes, Project Manager
Environmental Sciences Division

8/1/91
Date

K. L. Brady, Division Manager
Health, Safety, and Environmental Management

Date

C. H. Peterson, Chairman
Environmental, Health, & Safety Council

Date

CONTENTS

FIGURES iii

TABLES iii

ACRONYMS iii

1.0 INTRODUCTION 1
- 1.1 Purpose 1
- 1.2 Responsibilities 1
- 1.3 Applicability 1

2.0 SITE INFORMATION 1
- 2.1 Site Description 1
- 2.2 Facility Description 2

3.0 POTENTIAL HEALTH AND SAFETY CONCERNS 7
- 3.1 Control of Methane Concentration 7
- 3.2 Control of Exposure to Materials 7
  - 3.2.1 Alkaline Materials 8
  - 3.2.2 Steam and Boiling Water 8
  - 3.2.3 Contaminated Groundwater 8
  - 3.2.4 Nutrients 8
- 3.3 Control of Exposure to Pathogens 8
- 3.4 Control of Exposure to Radioactivity 9
- 3.5 Control of Heat Stress and Cold Exposure 9

4.0 SAFETY PROCEDURES 9
- 4.1 Site Access 9
- 4.2 Training 9
- 4.3 Protective Clothing 10
- 4.4 Respiratory Protection 10
- 4.5 Monitoring 10
- 4.6 Decontamination and Egress 10

5.0 EMERGENCY INFORMATION 10

6.0 OCCURRENCE REPORTING 11

APPENDIX 1, Control of Heat Stress, Standard Practice Procedure 607 12

FIGURES

Figure 1. Location of facility at the K-25 Site 3

Figure 2. Detailed site plan for the bioreactor system 4

Figure 3. Process flow diagram of the methanotroph bioreactor system 5

Figure 4. Schematic of equipment layout in the trailer 6

TABLES

Table 1. K-25 Emergency Contacts 11

ACRONYMS

CGI	Combustible Gas Indicator
DOE	Department of Energy
HS&EA	Health, Safety, and Environmental Affairs
MSDS	Material Safety Data Sheets
NPDES	National Pollutant Discharge Elimination System
ORNL	Oak Ridge National Laboratory
ORS	Occurrence Reporting System
PID	Photoionization detector
TCE	Trichloroethylene
VOC	Volatile organic contaminant

HEALTH AND SAFETY PLAN FOR THE CO-METABOLIC BIOREACTOR DEMONSTRATION AT THE K-25 SITE

1.0 INTRODUCTION

1.1 Purpose

The purpose of this plan is to assign responsibilities, establish personnel protection standards and mandatory safety practices and procedures, and provide for contingencies that may arise during operation of the co-metabolic bioreactor demonstration project at the K-25 Site, Oak Ridge, Tennessee. The effect of this Health and Safety Plan will be to minimize avoidable accidents, injuries, and worker exposure in the performance of normal site activities and to provide for contingencies that may arise while this effort is being conducted.

1.2 Responsibilities

Management of this demonstration project is the responsibility of the Oak Ridge National Laboratory (ORNL) Environmental Sciences Division. Much of the field operational work will be conducted by staff of the ORNL Chemical Technology Division. Other divisions involved in some aspects of the project are the K-25 Health, Safety and Environmental Affairs (HS&EA) Division and the Environmental Restoration Division.

The Project Manager shall designate a Project Safety Officer. Compliance with this plan shall be the immediate responsibility of the Safety Officer.

1.3 Applicability

The provisions of this Health and Safety Plan are mandatory for all on-site personnel and visitors engaged in any field activity of the co-metabolic bioreactor demonstration. All field personnel shall be provided a copy of this health and safety plan by the safety officer for their information. All work shall be completed in accordance with this plan. A pre-entry briefing shall be held by the safety officer prior to initiating any site activity and at such other times as necessary to ensure that personnel are apprised of the site health and safety plan and that this plan will be followed. Field personnel will be asked to sign and date an appropriate record signifying that this health and safety plan was distributed and that a pre-entry discussion was conducted.

2.0 SITE INFORMATION

2.1 Site Description

The co-metabolic bioreactor demonstration facility will be located at the eastern edge of the

building K-1098-D parking lot. The seep, which will serve as the influent, is adjacent to the east side of Avenue D, about 110 feet south of the center of the intersection with 9th Street and about 200 feet west of the boundary of the K-1070-C/D Classified Burial Ground. Location of the facility at the K-25 Site is shown in Figure 1. A detailed site plan for the bioreactor system is shown in Figure 2.

2.2 Facility Description

The co-metabolic bioreactor demonstration project will consist of the operation of two bioreactor units. During the first phase of the project a single bioreactor unit with methanotrophs will be operated. During the second phase, a bioreactor unit charged with toluene-utilizers or one bioreactor unit of each type will be operated. Each unit will consist of:

- piping from the seep to the bioreactor unit,
- an influent pump and associated valves and controls,
- a pretreatment filter, air oxidation unit (aeration tank), steam stripper, or another pretreatment option if needed,
- the bioreactors,
- up to five standard 300 ft^3 compressed gas cylinders for the carbon substrate (3% methane in air) or a 55-gallon drum containing dilute aqueous toluene solution,
- an off-gas scrubber (if required by the air discharge permit),
- piping and valves for operation in recycle mode,
- piping and containers for the collection of effluent,
- safety monitoring instrumentation and process controls.

Two skid-mounted bioreactor units, each consisting of two columns (≈12 inches diameter by 7 feet high) plus associated plumbing, pumps, and control panel will be used. A process flow diagram of the methanotroph bioreactor system is shown in Figure 3. These units will be housed in a van trailer to provide protection from inclement weather. The bioreactor will serve as the primary confinement. A stainless steel drip pan beneath each skid with the trailer will serve as secondary confinement. The drip pans will drain to a sump with a capacity of 55 gallons. Ventilation for the trailer will be provided by an exhaust fan mounted in the back door. A schematic of the equipment layout in the trailer is shown in Figure 4.

The utilities required are (1) process water for preparation of nutrient solutions and general equipment washing and flushing; (2) an AC electrical supply of 220 volts and 50 amps (3 phase); (3) compressed air at 50 psig; and (4) low pressure process steam for the steam stripper.

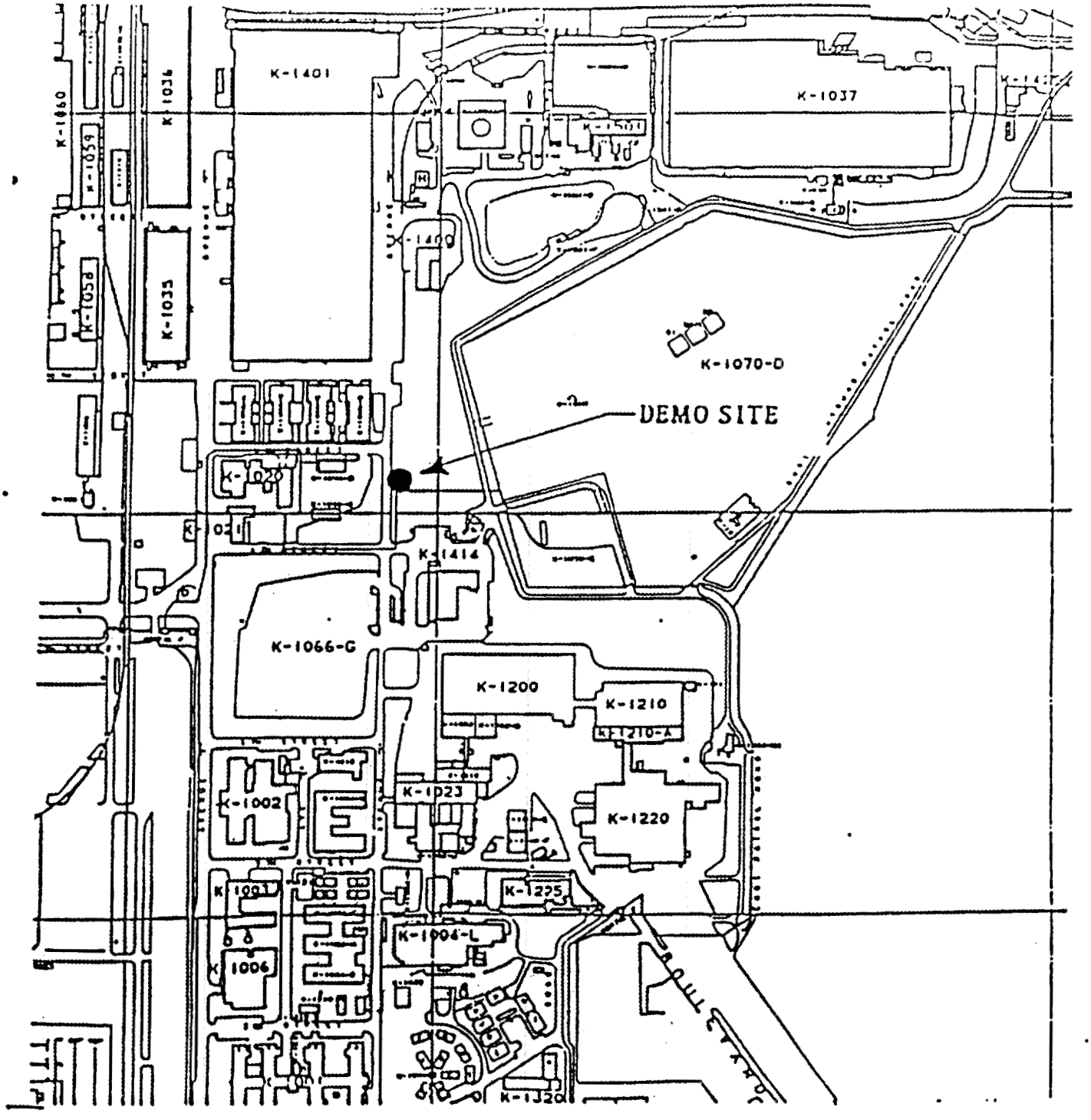

Figure 1. Location of demonstration at the K-25 Site

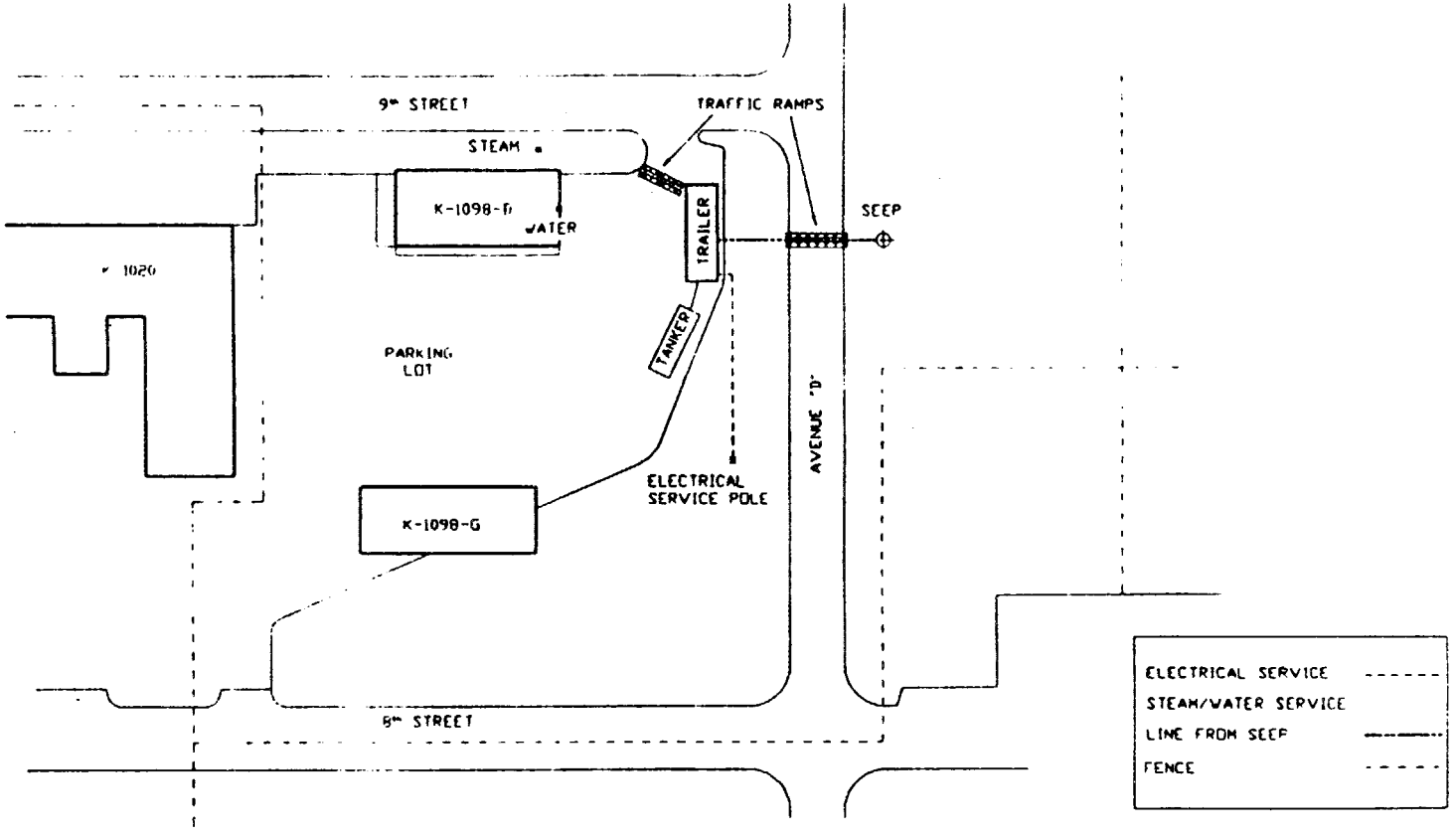

Figure 2. Detailed site plan for the demonstration

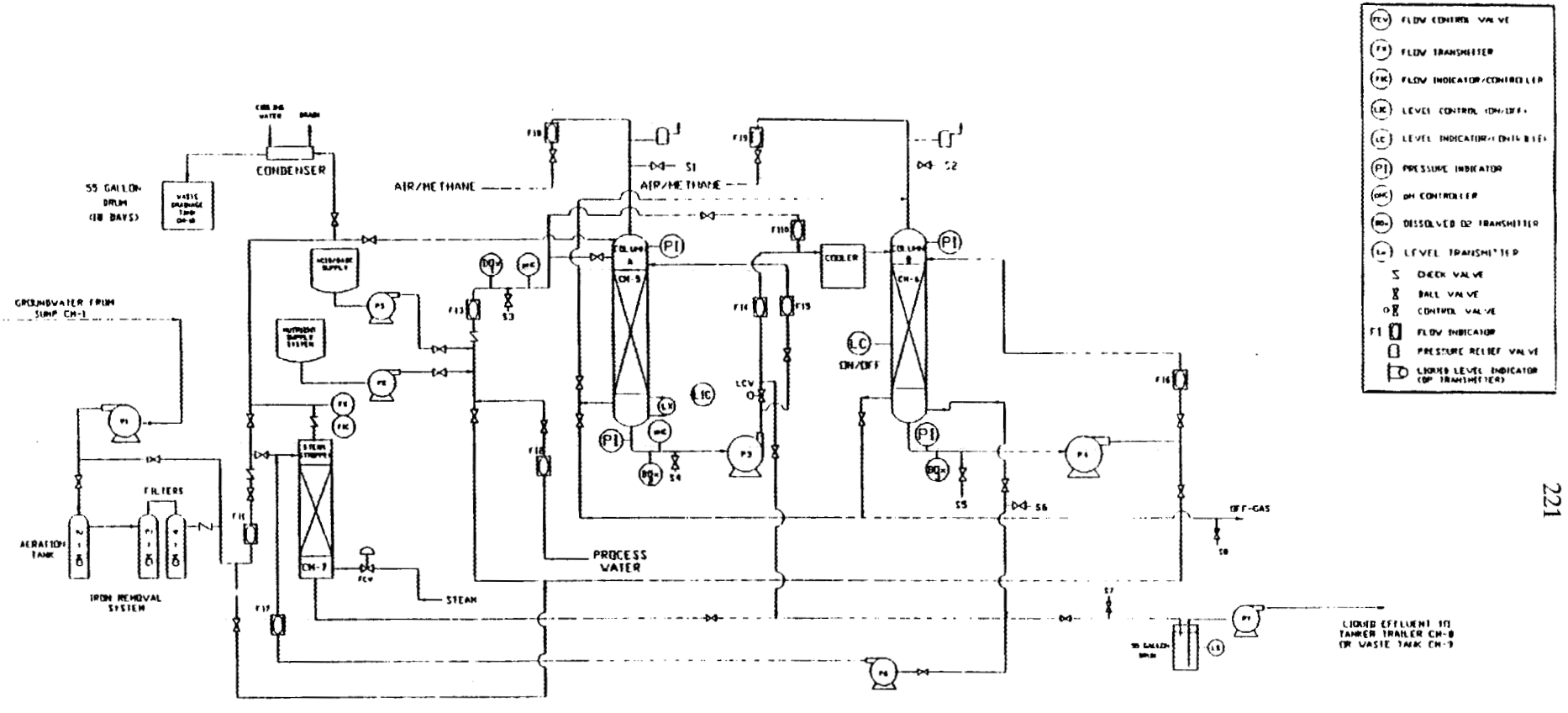

Figure 3. Process flow diagram of the methanotroph bioreactor system

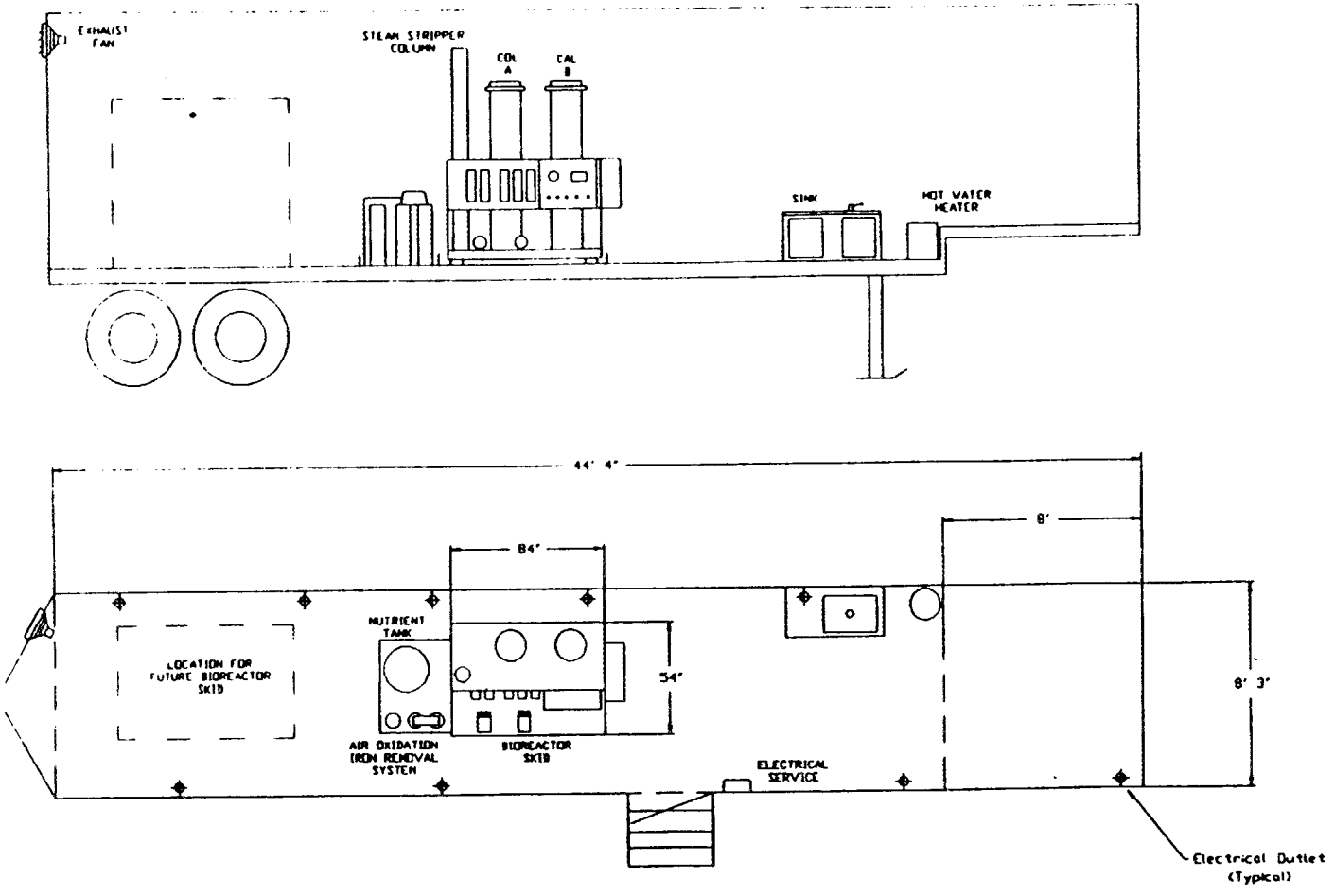

Figure 4. Schematic of equipment layout in the trailer

The facilities will be attended daily by project personnel. Weekend coverage will be arranged with K-25 shift personnel. In addition, automatic shutdown is provided if the liquid level rises in the bottom of the bioreactor column, or if liquid accumulates in the drip pans provided beneath each skid unit.

3.0 POTENTIAL HEALTH AND SAFETY CONCERNS

The health and safety concerns with co-metabolic bioreactors are the potential and kinetic energies involved with the operation of the bioreactors (i.e., pumps, steam, electrical power, etc.), and the presence of mixed organic solvents, radioactive materials, bacterial organisms, and flammable/explosive materials. These hazards have been evaluated independently (M. B. Andriulli, "Safety Assessment: Co-metabolic Bioreactor Demonstration at the Oak Ridge K-25 Site," K/D-SA-2156, June 24, 1991).

Special potential safety hazards identified in the safety assessment include: (1) control of methane gas concentration, (2) exposure to materials, (3) exposure to pathogens, and (4) exposure to radioactivity. In addition, heat stress in summer and cold exposure in winter are potential hazards.

3.1 Control of Methane Concentration

Up to five 300-ft^3 cylinders of 3% methane in air with pressures of ≈3000 psig will be manifolded together to supply the required carbon source to the methanotrophs. Methane is a non-toxic, flammable/explosive compound that has a lower flammability limit in air of 5.3% and a lower detonability limit in air of 6.3%. An analysis performed on a catastrophic failure of all 5 methane tanks inside the trailer has shown that the release will result in less than 4% v/v methane/air mixture in the trailer.

Methane gas (3% in air) will be purchased from a commercial vendor (e.g., Matheson Gas Products) as a certified standard gas to ensure that the concentration remains below the lower flammability limit and the lower detonability limit. The Safety Officer or his designate shall confirm the written analysis of each tank prior to connection to the manifold to ensure that the concentration does not exceed the lower flammability limit.

Methane may act as an asphyxiant in an oxygen deficient atmosphere. The trailer is equipped with a ventilation fan to maintain a satisfactory oxygen atmosphere.

3.2 Control of Exposure to Materials

Material Safety Data Sheets (MSDS) will be available on-site for all chemicals used or stored at the site. The types of materials handled include: (1) alkaline materials, (2) steam and boiling

water, (3) contaminated water, and (4) nutrients.

3.2.1 Alkaline Materials

The pH of the water will be raised with alkaline materials such as sodium hydroxide, calcium hydroxide, and/or soda ash. These materials are corrosive to the skin and the eyes; therefore, safety glasses and appropriate gloves are required to be worn when handling these materials. If skin contact occurs, the affected areas should be rinsed thoroughly with water. If eye contact occurs, the available eyewash station will be used to rinse the eyes for at least 15 minutes and medical attention shall be obtained.

3.2.2 Steam and Boiling Water

Steam is supplied at 15 psig and used in the stripper at ≈100°C. Serious burns could result from contact with steam, boiling water, or hot pipes and vessels. The steam stripper and associated piping will be insulated to protect personnel. Medical treatment shall be sought for any burns soon after contact.

3.2.3 Contaminated Groundwater

The groundwater is contaminated with various hydrocarbons, particularly trichloroethylene (TCE). Approximately 90% of these hydrocarbons are volatile organic contaminants (VOCs) and the remaining 10% are reported as oil and grease. Several of these compounds are potential carcinogens. Gloves, which are specified by the MSDS or recommended by the Industrial Hygiene Department, will be worn when sampling or contacting the water. If skin or eye contact occurs, the affected areas should be rinsed thoroughly with water.

3.2.4 Nutrients

The compounds used to make up the nutrient solution for the microorganisms are potential irritants to the skin and the eyes. Gloves, which are specified by the MSDS or recommended by the Industrial Hygiene Department, will be worn when contacting these compounds. Eye protection is also required when handling these compounds. If skin or eye contact occurs, the affected areas should be rinsed thoroughly with water.

3.3 Control of Exposure to Pathogens

Experimental studies of the microorganisms have not revealed any known pathogens, and it is not expected that any will appear. Evaluations will be performed, using standard techniques, on all

cultures proposed for use in the bioreactors, on the raw seep water, and on the bioreactor effluent. If pathogens are found at any time, the system will not be operated until a suitable disposal method is arranged.

3.4 Control of Exposure to Radioactivity

Water samples collected from the seep water have been analyzed for alpha and beta activity. The maximum alpha and beta activity measured have been 4.9 and 8.2 pCi/L, respectively. Since the contamination is very low and the seep water is currently discharged with a National Pollutant Discharge Elimination System (NPDES) permit, the control of radioactivity is not considered a hazard.

3.5 Control of Heat Stress and Cold Exposure

Summer temperatures can produce heat conditions that will severely restrict work time. At the K-25 Site, the evaluation of heat stress for persons wearing protective clothing and respirators is a standard part of the Industrial Hygiene Program. The plant's Standard Practice Procedure 607, "Control of Heat Stress," is included herewith as Attachment 1. In the event that heat stress symptoms begin, personnel shall seek shelter in an air-conditioned area. If symptoms persist, medical assistance shall be sought.

The current plan is to perform the demonstration during the warm months so that special precautions (e.g., heat tracing of water pipes) against cold weather are not required. Therefore exposure to cold temperatures is not considered a health hazard.

4.0 SAFETY PROCEDURES

4.1 Site Access

Routine access to the demonstration trailer and waste storage areas shall be limited to project staff, staff of the K-25 HS&EA Division, and other personnel with clear oversight responsibilities for the activities at the site.

Access to the site by visitors shall be the responsibility of the Project Manager or his designate. All visitors to the site shall be accompanied by the Project Manager or his designate, and they shall be given an overview of this plan prior to gaining access.

4.2 Training

Prior to conducting work activities at the site, all project personnel shall have completed the following training:

- GET (K-25): Basic, Course No. 3250,
- HAZCOM Training.

Additional training will be required for project staff serving as Waste Certification Officers as detailed in the Waste Generation and Disposal Plan for the project.

Training will be conducted for performance of specific procedures during the project. This training will be documented as detailed in the project QA/QC Plan.

4.3 Protective Clothing

Safety glasses shall be worn in the demonstration process area of the trailer and in the designated Waste Storage Area at all times.

Protective clothing shall consist of appropriate field clothing and safety shoes. Clothing shall be changed as soon as possible upon exposure to contaminated groundwater or chemicals.

4.4 Respiratory Protection

No respiratory protection is required on the site.

4.5 Monitoring

A schedule shall be developed in conjunction with the K-25 Site Industrial Hygiene Department for routine surveillance monitoring of the trailer. Monitoring shall include total volatile organic contaminants as measured by a photoionization detector (PID), and a combustible gas indicator (CGI). Monitoring shall occur at least once during startup of the demonstration, and at intervals deemed sufficient by the K-25 Industrial Hygiene Department to ensure that routine operation of the unit poses no unacceptable airborne exposure hazards.

4.6 Decontamination and Egress

No monitoring shall be required upon leaving the demonstration site. Workers shall wash their hands and dispose of gloves before leaving. Good personal hygiene should be practiced by all workers on the site.

5.0 EMERGENCY INFORMATION

The K-25 Plant Protection and Shift Operations Division provide 24-hour emergency response coverage, which is the responsibility of the Plant Shift Superintendent, Shift Operations Department. The Shift Superintendent is assisted by a well-trained plant emergency squad, and he/she is the overall coordinator of responses to emergencies such as fires, major equipment failure, hazardous materials

releases or spills, natural disasters, and sabotage. Table 1 lists the K-25 departments and telephone numbers that may be contacted in an emergency.

Table 1. K-25 Emergency Contacts

CONTACT	TELEPHONE NUMBER
Shift Superintendent[a]	911 (Plant Phone) 574-3282 (Cellular)
Environmental Management	574-8222
Guard Department	574-8315
Health Physics	574-9620 574-0332
Industrial Hygiene	574-8567
Medical	574-8562
Public Relations	574-8093
Safety	574-8568
Security	574-8326

[a]Contact the Shift Superintendent first. The Superintendent is the trained emergency response director.

6.0 OCCURRENCE REPORTING

As of August 30, 1990, the implementation of Department of Energy (DOE) Order 5000.3A, "Occurrence Reporting and Processing of Operations Information," became effective. The occurrence reporting system (ORS) may be initiated anytime an employee, contractor, or subcontractor reports problems, concerns, and adverse conditions or events that have or could have adverse or negative impact on safety, environment, health, quality, security, or operations. Occurrences are to be reported to the Project Manager or his designate, who will relay appropriate information to the Plant Shift Superintendent. The Plant Shift Superintendent officially notifies the required DOE offices in accord with the occurrence reporting procedure.

APPENDIX 1, Control of Heat Stress, Standard Practice Procedure 607

Attachment 1

MARTIN MARIETTA ENERGY SYSTEMS, INC.

OAK RIDGE GASEOUS DIFFUSION PLANT

STANDARD PRACTICE PROCEDURE

NUMBER	607
PAGE	1 of 7
DATE	02/90

SUBJECT: CONTROL OF HEAT STRESS

A. POLICY: It is ORGDP policy to provide general guidelines for protection of employees who are required to work in a hot environment or who are required to wear protective clothing that can result in a hot micro-environment.

B. SCOPE: This procedure applies to all ORGDP employees. Other contractor and subcontractor personnel working at ORGDP will be provided with guidance in accordance with this procedure.

NOTE: The rationale for the Heat Stress Program is in Attachment 1.

C. REFERENCES:

American Conference of Governmental Industrial Hygienists, Threshold Limit Values and Biological Exposure Indices for 1989-1990, ACGIH, Cincinnati, Ohio

ESH-7, "Control of Occupational Exposure to Chemical, Radiation, and Physical Stresses"

NIOSH Publication No. 86-113 (April 1986), "Criteria for a Recommended Standard... Occupational Exposure to Hot Environments"

NIOSH, OSHA, USCG, and EPA Publication No. 85-115 (October 1985), "Occupational Safety and Health Guidance Manual for Hazardous Waste Site Activities"

D. DEFINITIONS:

1. Hot Environment - Any combination of air temperature, humidity, radiant heat, and wind speed that exceeds a wet bulb globe temperature (WBGT) index of 84°F.

2. Hot Micro-environment (Level I) - The area surrounding a person's body when wearing encapsulating semi-permeable or impermeable clothing in an environment with a shielded dry bulb air temperature greater than 70°F (standard mercury-in-glass thermometer with the bulb shielded from radiant heat).

3. Hot Micro-environment (Level II) - The area surrounding a person's body when wearing encapsulating semi-permeable or impermeable clothing in an environment with a shielded dry bulb air temperature greater than 110°F.

D. DEFINITIONS: - continued

4. Heat Illness - Any physiological disorder arising from a person's inability to maintain thermal balance due to heat stress.

5. Acclimatization - A series of physiological and psychological adjustments that occur in an individual during the first week (approximate) of exposure to heat stress so that, thereafter, the individual has increased capability to withstand hot working conditions.

6. Heat Stress - Physiological disorders due to an individual's inability to maintain thermal balance in hot environments.

7. Wet Bulb Globe Temperature - The sum of 0.7 of the natural wet bulb, plus 0.3 of the globe temperature when indoors or outdoors with no solar load. The WBGT when outdoors with a solar load is 0.7 of the natural wet bulb, plus 0.2 of the globe temperature, plus 0.1 of the dry temperature.

E. RESPONSIBILITIES:

1. Supervisor

a. Ensures compliance with all applicable regulations, standards, and procedures pertaining to hot environments or hot micro-environments. (ESH-7 III[D][1],[8])

b. Requests Industrial Hygiene Department personnel to perform temperature measurements and identify areas that may produce hot environments or hot micro-environments. (ESH-7 III[D][1],[2]; NIOSH Pub. No. 86-113, Chapter I, Section I (b)(2),(3),(4); ACGIH TLV Handbook, pp. 75-76)

c. Ensures that employees who have potential for this type of exposure must have satisfactorily completed a medical examination to assess their ability to work under heat stress conditions. Employees returning to work following an extended period of illness will be referred to the Medical Department for special examination and approval prior to work under heat stress conditions. (ESH-7 III[D][1]; NIOSH Pub. No. 86-113, Chapter I, Section 2[b][c])

E.1. RESPONSIBILITIES: - continued

d. Ensures that employees who have potential for this type of exposure must have satisfactorily completed yearly micro-environmental heat stress training. (In addition to requirements of this procedure, training must include symptoms of common heat illnesses, corresponding first aid measures, embryo-fetal hazards, and proper use of approved cool suits and/or ice vests.) (ESH-7 III[D][7]; NIOSH Pub. No. 85-115, pp. 8-21; NIOSH Pub. No. 86-113, Chapter 1, Section 6[a],[b])

e. Promotes acclimatization of newly assigned employees, as well as any returning to work after an absence of two weeks or more, by gradually increasing the anticipated work load and exposure time from 50 percent (Day 1), to 60 percent (Day 2), etc., until achieving 100 percent (Day 6). (ESH-7 III[D][8]; NIOSH Pub. No. 85-115, pp. 8-22, 8-23; NIOSH Pub. No. 86-113, Chapter VI[B][3][a]; ACGIH TLV Handbook pp. 80)

f. Permits employees to interrupt their work when necessary to prevent heat illness. Anyone displaying symptoms of heat illness or taking rest breaks with unusual frequency will be referred to the Medical Department for examination. However, rest breaks may be taken more frequently during the acclimatization period. (ESH-7 III[D][3]; NIOSH Pub. No. 85-115, pp. 8-21; NIOSH Pub. No. 86-113, Chapter VI[B][1])

g. Provides an adequate supply of cool, potable water with disposable drinking cups and a suitable water container near the work area but outside any established contamination zone. If desired, one level teaspoon of salt per gallon of water may be added to replenish that lost through perspiration. (NIOSH Pub. No. 85-115, pp. 8-21; NIOSH Pub. No. 86-113, Chapter I, Section 7[c][1][f]; ACGIH Handbook, pp. 79-80)

h. Implements practical heat stress abatement measures to protect and provide relief for employees. These may include scheduling work for cooler periods in the day, use of radiant heat shielding, insulation, fans, mobile or portable air conditioners, cool rooms, cool suits/vests, and the buddy system. (ESH-7 III[D][][8]; NIOSH Pub. No. 85-115, pp. 8-21; NIOSH Pub. No. 86-113, Chapter I, Section 7[a][2])

MARTIN MARIETTA ENERGY SYSTEMS, INC.

OAK RIDGE GASEOUS DIFFUSION PLANT

STANDARD PRACTICE PROCEDURE

NUMBER	607
PAGE	1 of 7
DATE	02/90

SUBJECT: CONTROL OF HEAT STRESS

E.1. RESPONSIBILITIES: - continued

NOTE: All employees working under Level II conditions must wear an approved cool suit/vest and be monitored by a similarly equipped back-up person. Use of a cool suit/vest and the buddy system are optional under Level I conditions.

i. Schedule overtime so that employees are not exposed to heat stress more than 12 hours per day. Personnel working under such conditions will not be required to work overtime if they feel physically unable to do so. (ESH-7 III[D][8]; NIOSH Pub. No. 85.115, pg. 8-21; NIOSH Pub. 86-113, Chapter I, Section 7[c][1][a])

2. Employee

a. Reports their health status promptly upon returning to work after an extended illness. Any physical condition (e.g., salt-free diet) or prescriptive medicine that may impair one's ability to withstand heat stress will be reported to their supervisor as well as to the Medical Department for examination. (NIOSH Pub. No. 85-115, pp. 8-22; NIOSH Pub. 86-113, Chapter IV[A][6][d][2])

b. Maintains awareness of the symptoms of heat illnesses and immediately notifies the supervisor when any of these conditions occur. (NIOSH Pub. No. 85.115, pp. 8-21; NIOSH Pub. No. 86-113, Chapter I, Section 6[a])

c. Replenishes salt and water lost through perspiration by drinking extra fluids throughout the work shift and adding more salt to food. (NIOSH Pub. No. 85-115, pp. 8-21; NIOSH Pub. No. 86-113, Chapter I, Section 7[c][1][f])

d. Attends a heat stress training program annually to increase awareness of potential hazards imposed by work in hot micro-environments and encourages use of approved countermeasures to reduce heat strain. (NIOSH Pub. No. 85-115, pp. 8-21; NIOSH Pub. No. 96-113, Chapter 1, Section 6[a])

e. Arranges nonscheduled work breaks through self-pacing when necessary to prevent heat illness. (NIOSH Pub. No. 85-115, pp. 8-21; NIOSH Pub. No. 86-113, Chapter 1, Section 7[c][1][a])

E.2. RESPONSIBILITIES: - continued

NOTE: Most activities in hot environments should be conducted with a buddy who is able to observe the partner for signs of heat exposure and who will notify the supervisor if help is needed. The buddy system is optional for Level I and mandatory for Level II hot micro-environments.
(NIOSH Pub. No. 86-113, Chapter IV,[B][4][e])

3. Industrial Hygiene Department

a. Establishes a procedure for heat stress monitoring for hot environments and hot micro-environments. (ESH-7 III[D][4]; NIOSH Pub. No. 85-115 pp. 8-20, 8-21; NIOSH Pub. No. 86-113, Chapter 1, Section 1[b])

b. Identifies hot environments by conducting routine and special heat stress surveys in various work areas. Supervision will be notified of results and will receive recommendations for appropriate health protection measures for specific jobs. (ESH-7 III[D][3],[4]; NIOSH Pub. No. 85-115 pp. 8-20, 8-21; NIOSH Pub. No. 86-113, Chapter 1[b][4])

c. Identifies Level II hot micro-environments by conducting routine and special heat stress surveys. Supervisor will be notified of results and any recommendations. (ESH-7 III[D][3],[4]; NIOSH Pub. No. 85-115, pp. 8-20, 8-21)

d. Performs work area surveillance and inspections on a periodic basis to ensure that provisions of this procedure have been implemented. (ESH-7 III[D][2])

e. Selects, develops, and updates heat stress training materials for potential heat stress conditions. (ESH-7 III[D][8])

f. Reviews proposals submitted by the Engineering Division. (ESH-7 III[D][2])

g. Collects and maintains hot environment monitoring data for specific work areas. (ESH-7 III[D][12]; NIOSH Pub. No. 86-113, Chapter 1, Section 8[a])

E. RESPONSIBILITIES: - continued

4. Medical Department

a. Performs physical examinations every 18 months on all employees required to work in hot environments and hot micro-environments. Exams will include a review of previous medical history with special attention given to cardiovascular and pulmonary functions, prescriptive medicines, and heat-related illnesses. Applicants for jobs involving work in hot environments or hot micro-environments must be deemed fit to perform under conditions of heat stress as a qualification for employment. (ESH-7 III[D][8]; NIOSH Pub. No. 86-113, Chapter 1, Section 2[b][c])

b. Performs special medical evaluations for all employees returning from extended periods of illness prior to working under conditions of heat stress. (ESH-7 III[D][8]; NIOSH Pub. No. 86-113, Chapter VII[B][2][a][1])

c. Provides written notification to employees and their supervisors stating the ability or inability of an employee to work under conditions of heat stress. (When work restrictions are necessary, their nature and extent are also stated.) (NIOSH Pub. No. 86-113, Chapter 1, Section 2[f])

d. Establishes and maintains physical examinations and medical evaluation records. (ESH-7 III[D][3],[12]; NIOSH Pub. No. Chapter 1, Section 8[b-e])

5. Engineering Division

a. Designs or modifies work areas to minimize heat stress conditions within limits of feasibility and available technology. (ESH-7 III[D][5]; NIOSH Pub. No. 86-113, Chapter I, Section 7[a])

b. Submits all engineering proposals to the Industrial Hygiene Department for review. (ESH-7 III[D][1],[2],[8])

MARTIN MARIETTA ENERGY SYSTEMS, INC.

OAK RIDGE GASEOUS DIFFUSION PLANT

STANDARD PRACTICE PROCEDURE

NUMBER	607
PAGE	7 of 7
DATE	02/90

SUBJECT: CONTROL OF HEAT STRESS

F. SPECIAL REQUIREMENTS: For work areas or building enclosures where there is a reasonable likelihood of combination(s) of environmental and metabolic heat exceeding the maximum limit.

1. Readily visible warning signs containing information on the required protective clothing and/or equipment, hazardous effects of heat stress on human health, and information on emergency measures for heat injury or illness will be posted in work areas and at entrances to work areas or building enclosures. (NIOSH Pub. No. 86-113, Section 4[2])

2. In any area where there is likelihood of heat stress emergency situations occurring, the warning signs required will be supplemented with signs giving emergency and first aid instructions. (NIOSH Pub. No. 86-113, Section 4[b])

3. All new and current workers, who are unacclimatized to heat and to work areas where there is a reasonable likelihood of heat injury or illness, will be kept informed through continuing education programs and heat-stress safety data sheets or on a form specified by the Occupational Safety and Health Administration. (NIOSH Pub. No. 96-113, Section 6[a][C])

MARTIN MARIETTA ENERGY SYSTEMS, INC.

OAK RIDGE GASEOUS DIFFUSION PLANT

STANDARD PRACTICE PROCEDURE

NUMBER	607, Attachment 1
PAGE	1 of 4
DATE	02/90

SUBJECT: CONTROL OF HEAT STRESS

This rationale was developed by a Heat Stress Committee as guidelines to assist in the control of heat stress hazards by Martin Marietta Energy Systems, Inc. Committee representatives were from ORGDP, ORNL, PGDP, Y-12 Plant, and PORTS.

RATIONALE

1. Environmental Monitoring Parameters

Present Energy Systems' health protection procedures utilize the WBGT index to identify hot environments. Adopted values differ from site to site (i.e., Y-12 = 79°F [Draft], PORTS = 82°F, ORGDP = 84°F, PGDP = 86°F, and ORNL = None documented). These valves were selected based on clothing customarily worn by employees when working under conditions of heat stress; none were deemed adequate to determine micro-environmental heat stress caused by wearing semipermeable or impermeable clothing, which impedes sweat evaporation. The WBGT index is heavily (70 percent) weighted in favor of the natural wet bulb temperature that correlates with evaporation of sweat, a primary cooling mechanism that is severely impaired by such clothing.

a. Hot Environment (Level I) - In general, researchers favor use of an adjusted dry bulb air temperature that compensates for radiant heat load. For moderate work activity levels, this measurement becomes the basis for heat stress determinations when ambient temperatures rise above normal room temperature (70°F). The committee members group agreed that virtually all employees who are required to wear impermeable clothing also work in areas that are predominantly room temperature or above. Adoption of a Level I hot environment limit of 70°F, as determined by a simple dry bulb thermometer, therefore, complies with existing guidelines, reduces the potential number of special industrial hygiene survey requests from supervision, and eliminates possible conflicts regarding applicability of the procedure by including everyone wearing such clothing in the micro-environmental heat stress program.

b. Hot Environment (Level II) - NIOSH recommends that a ceiling limit (WBGT) be observed for combinations of environmental and metabolic heat above which no worker will be exposed without adequate heat-protective clothing and equipment. For an acclimatized individual wearing a customary, one-layer, long-sleeved work ensemble and working at a moderate activity level (300 kcal/hour), this limit would be 98.2°F (36.8°C) WBGT. When a partially air and/or vapor impermeable ensemble is worn, NIOSH suggests lowering the limit by 7.2°F (4°C) to 91°F (32.8°C) WBGT and using adjusted dry bulb air

temperature criteria. Kenney suggests lowering the WBGT value 12.6°F (7°C) for similar conditions, thus yielding 85.6°F (29.8°C). Given cell floor (e.g., PORTS X-333 building, 112°F globe temperature, 10-40 percent relative humidity, and 100 fpm air velocity), the ceiling limit would correspond to 110°F dry bulb temperature with 37 percent relative humidity under the NIOSH reduction and 110°F dry bulb temperature with 17 percent relative humidity under Kenney's. The committee agreed that adoption of 110°F as a dry bulb air temperature ceiling limit was desirable and recommends that it be established as a Level II hot micro-environment where cool suits/vests and the buddy system are mandatory.

2. Personal Monitoring Parameters

NIOSH/OSHA/EPA recommend physiological monitoring for workers wearing encapsulating semipermeable or impermeable clothing when the dry bulb temperature exceeds 70°F. Parameters include a 30-second heart rate, oral temperature, and body water loss with acceptable maximums for each. After considering available information, committee members were not in favor of utilizing physiological, monitoring guidelines. Current heat stress programs in place at each facility do not require physiological monitoring, and a need has not been demonstrated to implement such measures. Self-paced employees trained to recognize early symptoms of heat illnesses can remove themselves from further exposures and return to work when able to do so. Use of cool suits/vests and the buddy system should provide adequate protection under Level II conditions.

Members of the group expressed an interest in evaluating the new Metrosonics HS-383 personal heat stress monitor. This device monitors heart rate and skin temperature, logs data, interfaces with personal computers, and features visual and audible alarms to alert workers when they have approximately 10 minutes of safe work time remaining. Unit cost is less than $1500.

3. Work-Rest Regimen/Self-Pacing

Although work-rest guidelines based on clothing ensemble, activity level, and radiant load exist (e.g., Westinghouse [EPRI] and NIOSH/OSHA/EPA), they are difficult to administrate. Current Energy Systems' heat stress programs utilize self-pacing (sometimes called self-determination). The committee agreed that this measure has proven adequate in preventing heat illness and recommends its use for hot micro-environmental policy.

4. Mandatory Heat Stress Physical Examinations

In addition to traditional aspects of heat stress exams, NIOSH/OSHA/EPA states that a "stress test" (graded exercise) may be administered at the discretion of the examining physician, particularly where heat stress may occur. Also, NIOSH recommends that examining physicians question workers regarding their reproductive history, pregnancies, and possible heat related infertility. Committee members do not advocate routine use of stress tests (even for Level II workers) or reproductive questionnaires. However, medical directors may wish to discuss the advisability of utilizing these measures.

5. Employee Education

Training currently given to workers in hot environments needs to be supplemented. Information describing stress imposed by wearing semipermeable and impermeable clothing, proper use of special personal protective equipment (e.g., cool suits/vests) and implementation of the buddy system should be given to workers in hot micro-environments. The committee agreed that reproductive considerations presented by NIOSH (pregnancy, infertility, and teratogenicity) should be included in heat stress training and embryo-fetus protection training.

6. Embryo-Fetus Protection

NIOSH presents concerns regarding heat-induced infertility, teratogenicity, and abortion. Animal experiments indicate that hyperthermia in pregnant females may result in embryo death and gross structural defects. While evidence for similar effects in humans is less convincing, recent retrospective epidemiologic studies have associated hyperthermia during the first trimester of pregnancy with birth defects, especially in central nervous system development (e.g., anencephaly). NIOSH concludes by stating that, "it appears prudent to monitor the body temperature of a pregnant worker exposed to total heat loads above the recommended exposure limit every hour or so to ensure that the body temperature does not exceed 39°C - 39.5°C (102°F - 103°F) during the first trimester of pregnancy." The committee members do not recommend implementation of this NIOSH suggestion. Female employees do not typically report pregnancy until several weeks of gestation have elapsed. Depending on potential hazards, pregnant employees may be restricted from jobs requiring personal protective clothing. Awareness of potential hyperthermia hazards appears to be the best protection option. This awareness should be promoted in heat stress and embryo-fetus training programs.

7. Cool Suits/Vests

NIOSH recommends that personal protective equipment be required whenever the established ceiling limit is exceeded, and NIOSH/OSHA/EPA notes that under certain conditions "a cooling garment may be needed." Researchers agree that proper use of these devices promotes both comfort and safety and often increases "stay time" from a few minutes to more than one hour. The committee agreed and recommended that cool suits/vests be made available to workers in hot micro-environments as optional for Level I and mandatory for Level II conditions. Training programs should include specific instructions regarding proper use of selected devices.

8. Buddy System

NIOSH and Westinghouse (EPRI) recommend use of the buddy system under certain conditions as a preventive work practice. The committee agreed and recommended that employees be trained and/or responsible for observing fellow workers to detect early signs of heat illness such as weakness, unsteady gait, disorientation, etc. This countermeasure should be optional for Level I and mandatory for Level II hot micro-environments.

9. Contractor Compliance Requirements

Current Energy Systems' procedures for health protection in hot environments are in apparent disagreement regarding nonemployee compliance (i.e., Paducah and Portsmouth require it, whereas Oak Ridge [ORGDP] does not). NIOSH/OSHA/EPA recommends that a site safety plan, which includes measures for work in hot weather, be developed, reviewed, and approved prior to site activities. Committee members agreed to recommend that other contractors and subcontractors requiring workers to wear semipermeable or impermeable clothing be required to submit a written heat stress control program with documented evidence of proper training and medical approval for each individual before work proceeds. Ideally, this documentation should be required by the Purchasing Department in each bid offer and submitted to Energy Systems' Health, Safety, and Environmental Affairs Division for review and approval prior to contracting the selected organization.

APPENDIX K

EXAMPLE OF QUALITLY ASSURANCE/QUALITY CONTROL PLAN

OAK RIDGE NATIONAL LABORATORY

OPERATED BY MARTIN MARIETTA ENERGY SYSTEMS, INC.
POST OFFICE BOX 2008, OAK RIDGE, TENNESSEE 37831

QUALITY ASSURANCE PROGRAM

COPY	DISTRIBUTION
01	E.L. Allred
02	C.H. Brown
03	C.G. Cowart
04	T.L. Donaldson
05	C.W. Gehrs
06	S.E. Herbes
07	P.B. Hoke
08	H.L. Jennings
09	M.I. Morris
10	A.V. Palumbo
11	L.E. Roberson
12	G.W. Strandberg

TRANSMITTAL NUMBER: None

DATE: May 9, 1991

RETURN COMMENTS TO:

BUILDING

MAILSTOP

NOT LATER THAN:

TYPE SUBMISSION
- ☐ 1. DRAFT
- ☒ 2. APPROVED
- ☐ 3. REVISION
- ☐ 4. NEW
- ☐ 5.

TYPE ACTION
- ☐ A. INFORMATION
- ☐ B. COMMENTS
- ☒ C. USE

NUMBER		ACTION
QAP-X-91-ES-070	Co-Metabolic Bioreactor Demonstration at the K-25 Facility, Quality Assurance Plan	C

SIGNATURE: Glen Cowart

UCN-8108B (3 3-89)

Document No.: QAP-X-91-ES-070

CO-METABOLIC BIOREACTOR DEMONSTRATION AT THE OAK RIDGE K-25 FACILITY

QUALITY ASSURANCE PLAN

REVISION 0

MAY 8, 1991

S. E. Herbes 5/7/91

S. E. Herbes, Project Manager
Co-Metabolic Bioreactor
Demonstration

L. E. Roberson 5/9/91

L. E. Roberson, Environmental
Sciences Division
Quality Assurance Specialist

D. S. Snake for P. B. Hoke

P. B. Hoke, Oak Ridge National
Laboratory, Quality Assurance
Manager

C. G. Cowart 5/8/91

C. G. Cowart, Waste Research
and Development Programs
Quality Assurance Specialist

TABLE OF CONTENTS

Approval Sheet i
Table of Contents ii

Introduction 1
General 1
Purpose 1
Responsibility 1
QA Category Evaluation 1

1.0 Organization 2
1.1 General 2
1.2 Project Manager 2
1.3 Principle Investigators 2
1.4 Quality Assurance Staff 3
1.5 Support Organizations 3

2.0 Quality Assurance Program 4
2.1 QA Plans 4
2.2 Status Reporting 4
2.3 Indoctrination and Training 4

3.0 Design Control 5
3.1 Laboratory Studies 5
3.2 Bench-Scale Tests 5
3.3 Field Bioreactor Demonstrations 5
3.4 Site Preparation 6

4.0 Procurement Document Control 6

5.0 Instructions, Procedures, Plans and Drawings 6
5.1 Project Plan 6
5.2 Instructions and Procedures 6
5.3 Drawings 7
5.4 Reviews 7

6.0 Document Control 7
6.1 Quality Affecting Documents 7
6.2 Technical Notebooks 7

7.0 Control of Purchased Items and Services 8

8.0 Identification and Control of Materials, Parts, and Components 8
8.1 Samples and Items to be Controlled 8

9.0 Control of Processes 8
9.1 Qualification of Personnel 8

TABLE OF CONTENTS (Continued)

10.0 Inspections 9
10.1 Inspection of Bioreactors 9

11.0 Test Control 9
11.1 Preoperational Testing 9

12.0 Control of Measuring and Test Equipment 10
12.1 ORNL 10
12.2 K-25 10

13.0 Handling, Storage, and Shipping 10
13.1 Sampling 10
13.2 Waste Materials 10

14.0 Inspection, Test, and Operating Status 11

15.0 Nonconformances and Corrective Action 11

16.0 Quality Assurance Records 11

17.0 Audits and Surveillances 11

18.0 Software 11

APPENDICES

Appendix A - Organization Chart
Appendix B - QA Plan Matrix
Appendix C - Functional Reponsibilities Matrix
Appendix D - Training Record Form
Appendix E - QA Records Categories
Appendix F - Document Review Form

INTRODUCTION

GENERAL

This demonstration project is to be conducted by Oak Ridge National Laboratory (ORNL) for the U.S. Department of Energy (DOE) Office of Technology Development in accordance with Technical Task Plan OR-369-AB. The project consists of installation and operation of two types of biological treatment systems (i.e. bioreactors), using as influent groundwater contaminated with mixed organic compounds from a seepage flow at the K-25 Plant in Oak Ridge, Tennessee. The demonstration will be conducted by ORNL staff and subcontractors in collaboration with the K-25 Health, Safety and Environmental Affairs (HS&EA) Division and the Environmental Restoration Division.

The objective of the project is to demonstrate the effectiveness of two innovative bioremediation technologies, based on co-metabolic processes, to remediate groundwater contaminated by mixed organic solvents at DOE sites.

PURPOSE

The purpose of this QA Plan is to describe the quality assurance program applicable to this project. The Plan details the Environmental Sciences Division (ESD) policies and procedures applicable to the work and the relationship of other organization's QA programs which apply in their areas of responsibility.

RESPONSIBILITY

The Project Manager is responsible for development and implementation of this QA Plan. Although activities are delegated to others in the project organization, the Project Manager retains responsibility for compliance with the QA Plan. Responsibilities for specific project positions are detailed in section 1.0 "Organization" of the QA Plan.

QA CATEGORY EVALUATION

Based on evaluation criteria in ESD QA Procedure QA-ES-2-101, this project has been determined to be a QA Category II.

1.0 ORGANIZATION

This section of the QA Plan adopts by reference the guidance in ESD procedure QA-ES-1-100. The project organization operates as a matrix and includes personnel from ORNL and K-25, as well as subcontractors. Appendix A depicts the project organizational relationships and the lines of responsibility and authority which affect the project. The key organizational positions supporting the work are described in the following paragraphs. These positions report to the Project Manager. Other positions shown on the organization chart in Appendix A are for the purposes of reporting relationships. Subcontractors are considered a part of the project team and are thus subject to the requirements of the QA Plan.

1.1 General

Each project member has a line organization which is administratively responsible for that person within ORNL or K-25. The project organization, being a temporary entity, utilizes available technical expertise to accomplish the project objectives. Therefore, the project staff operates under this QA program for the life of the project.

1.2 Project Manager

This position resides in the Environmental Sciences Division at ORNL and has the following responsibilities.

a) Overall success and quality of the project.

b) Preparation, approval and implementation of the QA Plan.

c) Assurance that all staff are familiar with the QA program.

d) Overall coordination of the task activities and organizational interfaces.

e) Stop work when conditions which pose a hazzard to health, safety or the environment are found.

f) Compliance with Environmental, Safety and Health requirements.

1.3 Principal Investigators

These positions report to the Project Manager, are staffed from the Chemical Technology and Environmental Sciences Divisions at ORNL, and have the following responsibilities.

a) Quality of the technical work.

b) Review of the QA Plan.

c) Implementation of and compliance with the QA Plan - both for themselves and any staff reporting to them.

d) Reporting conditions adverse to quality to the Project Manager.

e) Timely responses to any corrective actions which may be identified.

f) Assurance that the QA programs and operating procedures of support organizations are adequate for the project.

1.4 Quality Assurance Staff

These positions are represented by the Environmental Sciences Division, the Chemical Technology Division and the Waste Research and Development Programs at ORNL. The QA representatives have the following responsibilities.

a) Review and approval of the QA Plan.

b) Oversight of the QA program through audit, surveillance, review or other verification functions.

Each QA representative has sufficient authority, access to work areas and organizational freedom to:

- identify problems affecting quality
- initiate, recommend or provide solutions to problems affecting quality
- verify implementation of problem solutions
- ensure that further processing, delivery, installation, or use of an item or service is controlled until proper disposition of a nonconformance, deficiency or unsatisfactory condition has occurred.
- stop work when conditions which pose a hazzard to health, safety or the environment are found.

An interface is maintained with the K-25 QA organization to assure that information about activities affecting quality is transmitted to the host site QA representative.

1.5 Support Organizations

These organizations may include such functions as Analytical Chemistry, and Hazardous Waste Disposal. These organizations will operate under their own QA programs and their organization's standard operating procedures. They are responsible for assuring the quality of the work they perform.

2.0 QUALITY ASSURANCE PROGRAM

The Project Manager reports administratively through the Environmental Sciences Division, therefore a decision was made to use the ESD Quality Assurance Manual as the basic reference document for assigning QA controls to project activities. When necessary and in the best interest of the project, other participant's quality assurance programs will be referenced and used when doing work for the project providing those programs meet with the approval of project management and project QA.

This section of the QA Plan adopts by reference the guidance in ESD procedures QA-ES-2-100, QA-ES-2-101, QA-ES-2-102, and QA-ES-2-103. A modular profile of ORNL and ESD QA procedures, in relation to the NQA-1 elements, is given in procedure QA-ES-2-100 and is not reproduced in this QA Plan.

Significant responsibilities of the organizations involved in the project are presented in matrix form in Appendix C.

2.1 QA Plans

Since this is a multiple-organization project, a QA Plan Matrix is presented in Appendix B to show the relationships between the various project tasks and the QA programs controlling those tasks.

2.2 Status Reporting

Status reporting will be done in accordance with procedure QA-ES-2-102. Reporting status to the sponsor is the responsibility of the Project Manager. The WR&D Programs QAS reports project QA status through the WR&D Programs monthly status report.

2.3 Indoctrination and Training

Indoctrination into the requirements of this QA Plan will be conducted by the ESD QAS (or the Project Manager) for the project staff. Training to specific project procedures, which may be developed during the course of demonstration activities, will be conducted by the Principal Investigator (or a designee) responsible for the activity. Evidence of training will be maintained as separate training records in accordance with Appendix D. Training records become QA records as they are completed. Training records will contain: who was trained, who conducted the training, the date, the subject, and document numbers and titles where appropriate. Training records will be signed by those person conducting and receiving the training.

Training records of personnel operating under separate, approved QA programs - such as Analytical services - will be maintained in their division files.

3.0 DESIGN CONTROL

This section of the QA Plan adopts by reference the guidance in ESD procedure QA-ES-3-100 with specific controls and exceptions identified in the following paragraphs.

The design activities for the project include the laboratory studies, bench scale tests, and the field bioreactor systems. The controls for each of the project are described in this section. Although the laboratory studies and bench scale tests do not require design control, they do produce results which are used in the design of the field bioreactor systems and therefore they require the controls described below.

3.1 Laboratory Studies

This phase of the project is intended to rapidly determine optimum cultures and culture conditions for use in the bench-scale bioreactor tests through the use of batch laboratory systems. The controls for and results of this phase are documented in a controlled laboratory notebook. The notebook will include all necessary information to assure reproducibility of the studies and includes the results of the studies; the notebook will be reviewed quarterly and approved by the Project Manager or a qualified, designated alternate and any changes made will be initialed and dated. Reviews are to assure that the information presented in the notebook is understandable, legible, reasonable and is sufficient to allow the work presented to be continued or reproduced by another qualified individual. The Laboratory notebooks will conform to the guidance of QA procedure QA-ES-6-100 and will be maintained as project QA records.

3.2 Bench-Scale Tests

This phase of the project is intended to select the cultures to be utilized in the field bioreactor systems and to identify operating parameters of those systems. The controls for and results of this phase are documented in a controlled laboratory notebook. The notebook will include all necessary information to assure reproducibility of the studies and includes the results of the studies; the notebook will be reviewed quarterly and approved by the Project Manager or a qualified, designated alternate and any changes made will be initialed and dated. Reviews are to assure that the information presented in the notebook is understandable, legible, reasonable and is sufficient to allow the work presented to be continued or reproduced by another qualified individual.. Laboratory notebooks will conform to the guidance of QA procedure QA-ES-6-100 and will be maintained as project QA records.

3.3 Field Bioreactor Systems

This phase of the project will yield the results necessary to evaluate the bioreactor systems and make recommendations for their continued development and use. Therefore, control of the configuration of these systems is important to the success and replicability of these demonstrations, and to translation of the design into production systems, if necessary. Existing bioreactor units will be used in the demonstrations, with modifications and additions appropriate to the specific requirements of the processes to be demonstrated and evaluated. The design of these systems will be detailed in drawings and specifications as

necessary. Requirements for identification and approval of drawings are detailed in section 5.3 of this QA Plan.

It is not expected that the MMES Engineering Division will be used to produce system drawings. However, system schematics, flow charts and other drawings determined to be appropriate for describing the demonstration configurations will be produced within the Chemical Technology Division (CTD) according to CTD procedures.

3.4 Site Preparation

Modifications to the site to accommodate the field bioreactor systems and their protective housing, and updates to any K-25 site drawings as a result of site preparation are the responsibility of K-25. The ORNL project manager's responsibility is to assure that requirements adequate to site the field bioreactor systems are transmitted to the K-25 Plant & Equipment Division, and to assure that the modifications are being performed as required.

4.0 PROCUREMENT DOCUMENT CONTROL

This section of the QA Plan adopts by reference the guidance in ESD procedure QA-ES-4-100. Procurement activities will be conducted in accordance with the above procedure. Where procurement responsibility is delegated to the Principal Investigators in the Chemical Technology Division, procurement will be conducted in accordance with ORNL QA procedure QA-L-4-100. The Project Manager retains responsibility for review of all project procurements.

5.0 INSTRUCTIONS, PROCEDURES AND DRAWINGS

This section of the QA Plan adopts by reference the guidance in ESD procedure QA-ES-5-100 and ESD administrative procedures concerned with the preparation of procedures. These procedures will be followed to produce any new instructions, procedures or drawings developed for the project. Amplifications and exceptions are described below.

5.1 Project Plan

The project plan is the key guidance document for the project and therefore requires a documented technical review to assure that it is adequate for the work and acceptable to all organizations affected by its implementation.

5.2 Instructions and Procedures

When instructions or procedures are to be produced by organizations outside of ESD, they may be produced in accordance with that organization's methods providing those methods satisfy the requirements of the referenced ESD procedures. All new instructions and procedures will be subject to review and approval by the Project Manager or a qualified, designated alternate.

Existing procedures may be adopted for use after review and approval by the Project Manager. Approval for these adopted procedures will consist of the Project Manager signing and dating the title page of the procedure.

5.3 Drawings

System schematics, flow charts and other drawings will be produced within the Chemical Technology Division (CTD) according to CTD procedures. CTD procedures will be reviewed and concurred with by the Project Manager prior to implementation on this project. All schematics, flow charts and other drawings will be identified by: title, document number, revision, and date; and will have an approval block. All drawings are subject to review and approval by the Project Manager.

5.4 Reviews

All instructions, procedures and drawings prepared or adopted for use on this project will be reviewed and approved. Reviews of instructions, procedures, plans and drawings will be documented on the review form shown in Appendix F. The Project Manager is responsible for reviews, and he or a qualified, designated alternate will select reviewers appropriate to the subject matter.

6.0 DOCUMENT CONTROL

This section of the QA Plan adopts by reference the guidance in ESD procedures QA-ES-6-100 and QA-ES-6-101. For this project, the Project Manager is the individual resonsible for assuring that documents affecting quality are reviewed, approved and distributed. The Project Manager is also the authority for release of such documents.

6.1 Quality Affecting Documents

Quality affecting documents such as instructions, procedures, drawings and plans are controlled by the Project Manager, or a designated alternate. A controlled documents list will be maintained by the Project Manager or a designated alternate to identify the operating procedures to be used by this project. These will include procedures such as those for preparation, review and approval of drawings and sketches; and sampling procedures. As drawings are produced and approved they will also be included in the controlled documents listing. The controlled document listing will include, as a minimum, the title, revision, date, distribution and responsible individual for each document. Controlled documents will also become a part of the QA Records system.

6.2 Technical Notebooks

Registered technical notebooks will be assigned to individual investigators who are responsible for the protection of the notebooks. The notebooks are controlled during use and become QA records when complete. These notebooks are peer reviewed quarterly and copies are made at that time of all pages completed since the last quarterly review. The copies are transmitted to the project manager for inclusion in the QA records file.

7.0 CONTROL OF PURCHASED ITEMS AND SERVICES

This section of the QA Plan adopts by reference the guidance in ESD procedure QA-ES-7-100. Control of procured items and services will be accomplished in accordance with the above procedure. Where procurement responsibility has been delegated to the Principal Investigators in the Chemical Technology Division, procurement will be conducted in accordance with ORNL QA procedures QA-L-7-100, QA-L-7-101 and QA-L-7-102. The Project Manager retains responsibility for the acceptability of all items and services received.

8.0 IDENTIFICATION AND CONTROL OF ITEMS

This section of the QA Plan adopts by reference the guidance in ESD procedure QA-ES-8-100. Procedures detailing specific sampling protocols - including collection, identification, handling, storage and disposal - will be developed prior to commencement of field bioreactor operations. These procedures will be developed in accordance with Section 5 of this QA Plan. These procedures will be identified and controlled through a controlled documents list as described in Section 6 of this QA Plan.

8.1 Samples and Items to be Controlled

Samples and any fabricated or purchased items, determined by the Project Manager or the Principal Investigators to require control, will be identified in the operating procedures and controlled in accordance with the specifics of those procedures. The project Sampling Plan will include these procedures and any requirements for chain-of-custody.

9.0 CONTROL OF PROCESSES

This section of the QA Plan adopts by reference the guidance in ESD procedure QA-ES-9-100. For this project, operation of the field bioreactors and the sampling activities, are considered to be special processes since they are specialized techniques which are highly dependent on the skill of those personnel performing the operations. These processes will be controlled through project plans and procedures. The documentation produced to control these processes will be prepared in accordance with Sections 5 and 6 of the QA Plan.

9.1 Qualification of Personnel

Personnel selected by the Project Manager to perform the processes necessary to collect the information on which to base evaluations of the bioreactor systems will be qualified to perform those processes. Their qualifications will be documented in the project QA records file. Should personnel certifications be required, they will also be documented and maintained in the project QA records file.

10.0 INSPECTION

This section of the QA Plan adopts by reference the guidance in ESD procedure QA-ES-10-100. The Project Manager or a designated alternate is responsible for determining those items, either fabricated or purchased, requiring inspection; and for assuring that inspections are performed by qualified staff. Inspection plans and reports (appropriate to the item inspected) will be prepared and completed in accordance with QA-L-10-100. Inspection plans will identify, as a minimum: what is to be inspected, the inspection criteria, who is to perform the inspection, and when and where the inspection will be conducted. Inspection plans will be approved and dated. Inspection reports will also address each of the areas described in inspection plans.

10.1 Inspection of Bioreactors

The field bioreactor systems are existing devices which are being obtained from sources outside of ORNL; and modifications, pertinent to these demonstrations, will be made prior to system start-up. Therefore, these systems will be inspected by qualified personnel at ORNL prior to delivery to the K-25 site, and the inspections will be documented.

11.0 TEST CONTROL

This section of the QA Plan adopts by reference the guidance in ESD procedure QA-ES-11-100. The tests to be conducted for this project are the demonstrations of the bioreactor systems. These systems will be tested at K-25 to determine their capabilities to remove the contaminants of interest from the groundwater. The controls governing the tests will be described in test plans. The test plans will be developed in accordance with the above procedure and will receive reviews in accordance with Section 5 of the QA Plan. Test plans and test reports will become QA records. Test plans will identify, as a minimum: what is to be tested, the test criteria, who is to perform the test, and when and where the test will be conducted. Test plans will be approved and dated. Test reports will also address each of the areas described in test plans.

11.1 Preoperational Testing

In addition to the inspections identified in paragraph 10.1 above, the field bioreactor systems will also be subjected to tests appropriate to determine if they can be operated safely and that the modifications made to the units will perform as required.

12.0 CONTROL OF MEASURING AND TEST EQUIPMENT

This section of the QA Plan adopts by reference the guidance in ESD procedure QA-ES-12-100. The Principal Investigators, using Measuring & Test Equipment (M&TE) on this project, are responsible for assuring that each piece of M&TE is identified and properly labeled, that calibrations occur as planned, and that calibration records are captured for inclusion in the project QA records file.

12.1 ORNL

M&TE used at ORNL will be identified and tagged as either category A, B or C. Category B equipment will be put on the Instrumentation and Controls Division's recall system. Category A and C equipment will be identified in the test plans and procedures requiring that equipment.

12.2 K-25

M&TE used at the K-25 bioreactor test site will be identified and tagged as either category A, B or C. Category B equipment will be put on the K-25 recall system. Category A and C equipment will be handled as in 12.1 above.

13.0 HANDLING, STORAGE AND SHIPPING

This section of the QA Plan adopts by reference the guidance in ESD procedure QA-ES-13-100. The Project Manager and Principal Investigators will identify those instances which require documented handling, storage or shipping controls. These situations will either be addressed using existing procedures or new procedures will be developed in accordance with Section 5 of the QA Plan. Areas expected to require documented controls are described below.

13.1 Sampling

Procedures for sampling, identified under Section 8 of the QA Plan, will include special handling, storage or shipping requirements.

13.2 Waste Materials

Procedures for handling, storage and shipping of contaminated influent groundwater - which must be disposed after the bioreactor systems demonstrations - will either be addressed using existing procedures or new procedures will be developed in accordance with Section 5 of the QA Plan. A Waste Management Plan will be developed for the project.

14.0 INSPECTION, TEST AND OPERATING STATUS

This section of the QA Plan adopts by reference the guidance in ESD procedure QA-ES-14-100. It is expected that a readiness review will be conducted prior to start-up of the field bioreactor systems at K-25. The readiness review will be palnned and conducted by K-25 personnel in accordance with their readiness review procedures.

15.0 NONCONFORMANCES AND CORRECTIVE ACTIONS

This section of the QA Plan adopts by reference the guidance in ESD procedure QA-ES-15-100. The Quality Event Report (QER) and the Quality Investigation Report (QIR) specified in QA-ES-14-100 are no longer used at ORNL and are excluded from this project. The Occurrence Reporting System described in QA-L-16-100 will be used. Nonconformance Reports are still applicable and will be prepared in accordance with procedure QA-L-15-100.

16.0 QA RECORDS

This section of the QA Plan adopts by reference the guidance in ESD procedure QA-ES-16-100. The QA records categories expected for the project are given in Appendix E with the location of the master and duplicate file points.

17.0 AUDITS AND SURVEILLANCES

This section of the QA Plan adopts by reference the guidance in ESD procedure QA-ES-17-100. Surveillances will be scheduled based on the activities underway but will be conducted at least every six months. Surveillance teams will include both QA and technical representatives. The Project Manager and QA representatives will coordinate scheduling surveillances at appropriate times.

18.0 SOFTWARE

This section of the QA Plan adopts by reference the guidance in ESD procedure QA-ES-18-100. No software is expected to be developed for use on this project. Any technical software that is used on the project will be verified with appropriate tests to assure confidence that it is producing results consistent with requirements. Verifications will be documented as directed by the Project Manager but will contain the following as a minimum: 1) what software was verified, 2) what the requirements were, 3) what tests were performed, 4) what the results were, and 5) what corrections were made, if needed.

APPENDIX A

ORGANIZATION CHART

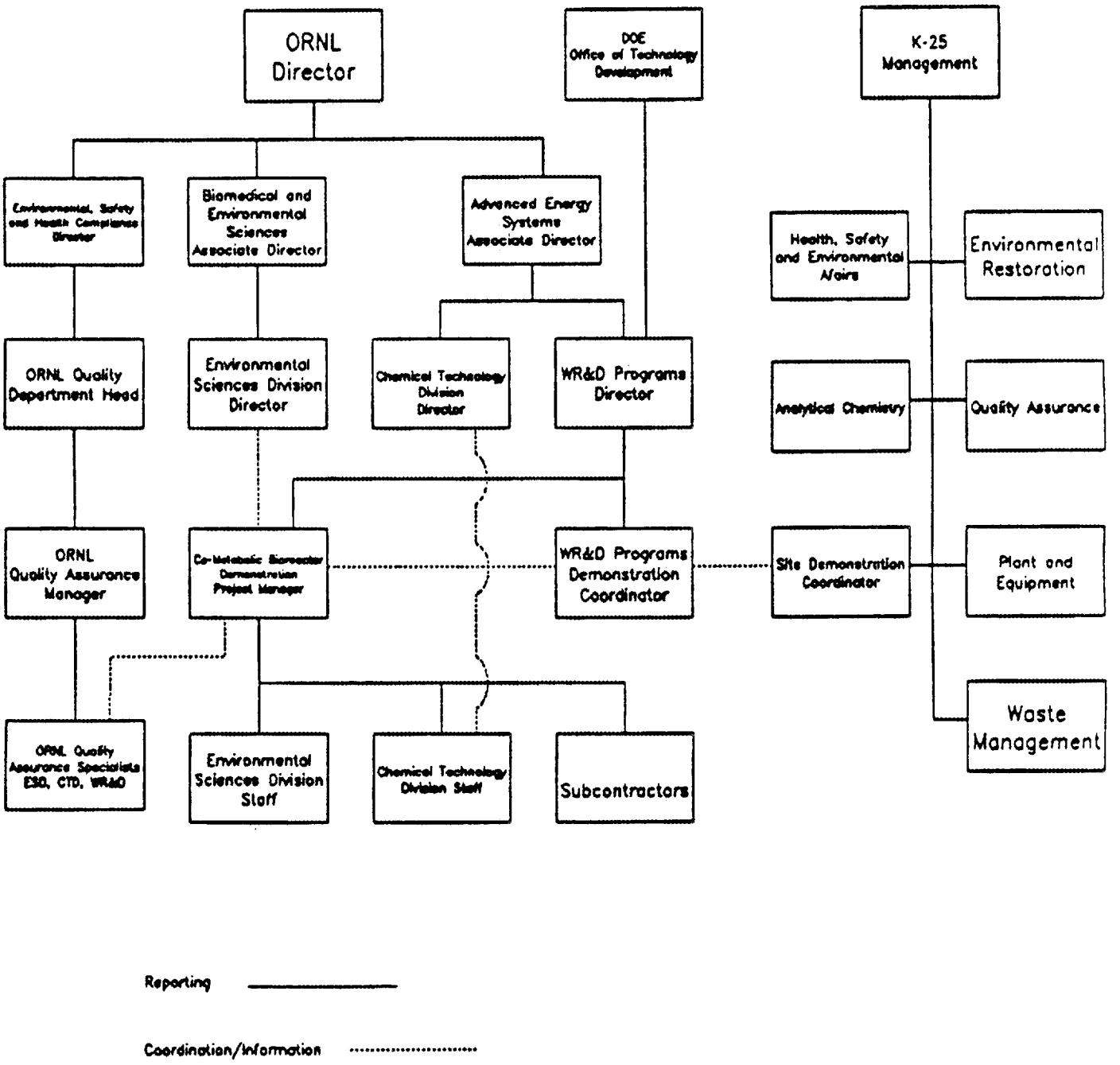

APPENDIX B

QA PLAN MATRIX

Task/Activity	Responsible Organization	QA Plan Title/QAP No.
Project Management and Permitting	ESD	QAP-X-91-ES-070
Laboratory and Bench Scale Studies	ESD	QAP-X-91-ES-070
Field Bioreactor Design	CTD	QAP-X-91-ES-070
Site Preparation	K-25	QAP:07-91-XXX
Waste Disposal	K-25	QAP:45-91-003
Analyses	K-25	QAP:04-91-XXX
Utilities	K-25	QAP:25-91-XXX
Field Bioreactor Operations	CTD	QAP-X-91-ES-070
Final Reporting	ESD	QAP-X-91-ES-070
Site Decontamination	CTD	QAP-X-91-ES-070

APPENDIX C

FUNCTIONAL RESPONSIBILITIES MATRIX

P = Prepare/Perform
A = Approve
I = Input
R = Review
S = Surveillance
D = Distribute

Document/Action	PROJECT MANAGER	PRINCIPAL INVESTIGATORS	SUPPORT ORGANIZATIONS	ORNL QA SPECIALISTS	K-25 MANAGEMENT	K-25 QA			
QA Plan	P/R/A	R		P/R/A D		R			
Drawings/Sketches	R/A	P							
Purchase Documents	R/A	P		R *					
Failure Reports	P	I	I	R					
Corrective Action	P/A	P/I	I	R/A					
Document Control	P	P	P	S					
QA Records	P			S					
Bioreactor Operations	R	P	P	S					
Document Reviews	P	P		P					
Sampling Control	R	P	P	S					
Chemical Analyses	R	R	P						
Site Preparation and Utilities	R	I			P				
Permitting	I	I	P		P/A				
Waste Disposal	I	I			P				
Audit/Surveillance	I	P/I		P/I		I			

* For single items greater than $1000

APPENDIX C (Continued)

FUNCTIONAL RESPONSIBILITIES MATRIX

P = Prepare/Perform A = Approve I = Input R = Review S = Surveillance D = Distribute Document/Action	PROJECT MANAGER	PRINCIPAL INVESTIGATORS	SUPPORT ORGANIZATIONS	ORNL QA SPECIALISTS	K-25 MANAGEMENT	K-25 QA			
Planning and Procedures	P/R/A	P/R/D	I	S					
Readiness Review	I				P				
Preoperational Inspection and Test	R	P		I					
Indoctrination and Training	P	P		P					

APPENDIX D

TRAINING RECORD FORM

TRAINING RECORD FORM **Cometabolism of TCE Project**	
Date(s) of Training:	
Trainee:	**Trainer:**
Process or Procedure (Number or Title):	
Location of Training:	
Comments:	
Signature of Trainee:	Date:
Signature of Trainer:	Date:

Note: This form is to be filed in the Central Quality Assurance file to be established and kept by S. E. Herbes, Bldg. 1505.

APPENDIX E

QA RECORDS CATEGORIES

Retention period (RP) - L (lifetime) or NP (non-permanent), if NP, state number of years
Master File Point - Location of the project record file
Duplicate File Point - Location of the duplicate record file

Name of Record	RP	Master File Point	Duplicate File Point
Test Plans	L	Bldg. 1505, Room 386	Bldg. 3017, Room 3
Test Reports	L	Bldg. 1505, Room 386	Bldg. 3017, Room 3
Calibration Reports	L	Bldg. 1505, Room 386	Bldg. 3017, Room 3
Inspection Reports	L	Bldg. 1505, Room 386	Bldg. 3017, Room 3
Personnel Qualification Records	L	Bldg. 1505, Room 386	Bldg. 3017, Room 3
Failure Reports - Occurrence Reports or Nonconformance Reports	L	Bldg. 1505, Room 386	Bldg. 3017, Room 3
Corrective Action Reports	L	Bldg. 1505, Room 386	Bldg. 3017, Room 3
Audit and Surveillance Plans and Reports	L	Bldg. 1505, Room 386	Bldg. 3017, Room 3
Readiness Review Plans and Reports	L	Bldg. 1505, Room 386	Bldg. 3017, Room 3
Instructions, Drawings and Procedures	L	Bldg. 1505, Room 386	Bldg. 3017, Room 3
Document Reviews	L	Bldg. 1505, Room 386	Bldg. 3017, Room 3
Procurement Documents	L	Bldg. 1505, Room 386	Bldg. 3017, Room 3
QA Plan	L	Bldg. 1505, Room 386	Bldg. 3017, Room 3
Chain-of-Custody Documentation	L	Bldg. 1505, Room 386	Bldg. 3017, Room 3
Analytical Reports	L	Bldg. 1505, Room 386	Bldg. 3017, Room 3
Laboratory Notebooks	L	Bldg. 1505, Room 386	Bldg. 3017, Room 3
Waste Disposal Plan	L	Bldg. 1505, Room 386	Bldg. 3017, Room 3
Decommisioning Plan	L	Bldg. 1505, Room 386	Bldg. 3017, Room 3

APPENDIX E (Continued)

QA RECORDS CATEGORIES

Retention period (RP) - L (lifetime) or NP (non-permanent), if NP, state number of years
Master File Point - Location of the project record file
Duplicate File Point - Location of the duplicate record file

Name of Record	RP	Master File Point	Duplicate File Point
Project Description	L	Bldg. 1505, Room 386	Bldg. 3017, Room 3
Permit Approvals	L	Bldg. 1505, Room 386	Bldg. 3017, Room 3
Project Safety Plan	L	Bldg. 1505, Room 386	Bldg. 3017, Room 3
Waste Disposal Reports	L	Bldg. 1505, Room 386	Bldg. 3017, Room 3
Safety Assessment	L	Bldg. 1505, Room 386	Bldg. 3017, Room 3
Photographs	L	Bldg. 1505, Room 386	Bldg. 3017, Room 3

APPENDIX F

DOCUMENT REVIEW FORM

DOCUMENT REVIEW FORM Cometabolism of TCE Project
Route To:
From:
Subject: Please review the attached document for clarity, technical accuracy, and objectivity based on its class. Feel free to comment on the makeup and mode of presentation. Please return the completed form to me by _____. Thank you.
Title:
Author(s):
CLASS: ____Memo ____ORNL/TM ____ORNL ____External Publication ____Drawing ____Other_____
COMMENTS: (Use additional pages if necessary.)

_____

Reviewer Date

APPENDIX L

EXAMPLE OF READINESS REVIEW PLAN

CO-METABOLIC TECHNIQUES FIELD DEMONSTRATION FACILITIES

The Operational Readiness Team

Plan Completed - September 9, 1991

Prepared for the
Readiness Review Board
for the
Co-Metabolic Techniques Field Demonstration Facilities

Prepared by the
Operational Readiness Team
Co-Metabolic techniques Field Demonstration Facilities
Oak Ridge, TN
managed by
MARTIN MARIETTA ENERGY SYSTEMS,INC.
for the
U.S. DEPARTMENT OF ENERGY

Readiness Review Plan
for the
Co-Metabolic Techniques Field Demonstration Facilities

Effective Date of Plan:_____

Approvals:

_____
M. I. Morris, ORT Chairman

_____
W. A. Miller, RRB Chairman

CONTENTS

1. INTRODUCTION 1

1.1 Plan Overview 1
1.2 Plan Scope 1
1.3 Overview of the Co-Metabolic Techniques Field Demo 1

2. CMTFDF DESCRIPTION 2

2.1 Facility Description 2
2.2 Process Description 3
Figure 2.1 Process Flow Sheet 5

3. PROGRAM MANAGEMENT 5

3.1 K-25 Site Manager 5
3.2 Other Managers 5
3.3 The Readiness Review Board(RRB) 5
3.3.1 The RRB Charter 5
3.3.2 The Board Members 5

3.4 The Operational Readiness Team (ORT) 5
3.4.1 The ORT Charter 5
3.4.2 The Team Members 6

3.5 The RRB and ORT Interface 6

4. THE REVIEW METHODOLOGY 7

4.1 The Operational Readiness Process 7
4.2 The Readiness Review Criteria 7
4.2.1 The Operational Readiness Tree for the CMTFDF 7
4.2.2 Readiness Review Criteria to be Evaluated 7
Figure 4.1 CMTFDF Readiness Tree 8

Appendix A Readiness Review Criteria for the Facilities and Equipment

Appendix B Readiness Review Criteria for the Managerial/Regulatroy Control Systems and Procedures

Appendix C Readiness Review Criteria for the Personnel

1. INTRODUCTION

1.1 PLAN OVERVIEW

Martin Marietta Energy Systems, Inc. Policy GP-24 "Operational Readiness Process" requires activities to follow a formal, focused or comprehensive readiness process to determine an activities readiness to proceed to the next increment of work when management determines that it is necessary. The policy is aimed at reducing the risks associated with mission success and requires a management approved "readiness plan" to be issued which (1) describes the activity under review (2) defines the scope of the process (3) identifies the team members (4) establishes organizational responsibilities (5) defines the methodology and criteria to be used for determining readiness (6) and defines the events which must take place to complete the process.

This Readiness Review Plan for the Co-Metabolic Techniques Field Demonstration Facilities (CMTFDF) located in the parking lot of building 1098-D complies with GP-24 and the applicable customer requirements. This plan was prepared by the CMTFDF Operational Readiness Team, established by the project team, to provide K-25 Site management and the K-25 Site Readiness Review Board information on the teams plan for ensuring that the CMTFDF will be ready to operate (as defined by the scope of this plan) when the formal readiness review process is completed. This plan together with progress reports that will be prepared by the review team on the CMTFDF readiness status will enable the Readiness (Name of Activity) Review Board to conduct it's independent assessment of the CMTFDF readiness to operate successfully and safely in accordance with the CMTFDF objectives.

This plan provides an overview of the CMTFDF project, the major milestones which must be accomplished for readiness, the methodology used to develop the criteria and the events which must take place as part of the review process to determine readiness for each phase of operation. The Operational Readiness Process schedule will be kept by field demonstration project engineer, H. L. Jennings, and is available for review at trailer facility.

1.2 PLAN SCOPE

Before the CMTFDF can begin operation, there has to be documented evidence that DOE, EPA, and TDHE concerns have been addressed; applicable permits and environmental documentation have been issued and procedures are in place specifically addressing the safe operation of these facilities; Safety, Utilities, Industrial Hygiene, Environmental Management, Health Physics, and Quality Assurance personnel have reviewed the facilities and plans; construction materials, used on the facilities, and equipment, used in the facilities, have been tested for their intended use; support personnel have been identified; a records system is in place; safety requirements have been met; and all support documentation has been completed. This plan has been prepared to ensure the safe and successful operation of the CMTFDF after the above requirements have been satisfied.

1.3 OVERVIEW OF THE CMTFDF PROJECT

The purpose of the Co-Metabolic bioreactor demonstration project is to demonstrate the effectiveness of bioremediation technologies, based on co-metabolic processes, for treatment of groundwater contaminated by mixed organic solvents. The project consists of installation and

operation of two types of bioreactors. Groundwater contaminated with mixed organic compounds from the seep located adjacent to the eastern boundary of the building K-1098-D parking lot at the K-25 Site will be used as influent to the bioreactors. Effluent from the bioreactors will then be collected and transported to the K-25 CNF facility for additional treatment and discharge. All the equipment for the CMTFDF excluding tankage will be housed in a van trailer. The effluent collection systems (tankage) will be located in a 90 day accumulation area or a satellite storage area.

2. CMTFDF DESCRIPTION

2.1 FACILITY DESCRIPTION

The CMTFDF project will consist of the operation of two bioreactor units. During the first phase of the project a single bioreactor unit with methanotrophs will be operated. During the second phase, a bioreactor unit charged with toluene-utilizers or one bioreactor unit of each type will be operated. Each unit will consist of:

- piping from the seep to the bioreactor unit,
- an influent pump and associated valves and controls,
- a pretreatment filter, air oxidation unit (aeration tank), steam stripper, or another pretreatment option if needed,
- the bioreactors,
- up to five standard 300 ft^3 compressed gas cylinders for the carbon substrate (3% methane in air) or a 55-gallon drum containing dilute aqueous toluene solution,
- an off-gas scrubber (if required by the air discharge permit),
- piping and valves for operation in recycle mode,
- piping and containers for the collection of effluent,
- safety monitoring instrumentation and process controls.

Two skid-mounted bioreactor units, each consisting of two columns (≈12 inches diameter by 7 feet high) plus associated plumbing, pumps, and control panel will be used. These units will be housed in a van trailer to provide protection from inclement weather. The bioreactor will serve as the primary confinement. A stainless steel drip pan beneath each skid with the trailer will serve as secondary confinement. The drip pans will drain to a sump with a capacity of 55 gallons. Ventilation for the trailer will be provided by an exhaust fan mounted in the back door.

The utilities required are (1) process water for preparation of nutrient solutions and general equipment washing and flushing; (2) an AC electrical supply of 220 volts and 50 amps (3 phase); (3) compressed air at 50 psig; and (4) low pressure process steam for the steam stripper. The facilities will be attended daily by project personnel. Weekend coverage will be arranged with K-25 shift personnel. In addition, automatic shutdown is provided if the liquid level rises in the bottom of the bioreactor column, or if liquid accumulates in the drip pans provided beneath each skid unit.

2.2 PROCESS DESCRIPTION

The bioreactor systems as shown in Figure 2.1, operate on the principle of co-metabolic degradation of TCE and associated contaminants. Microorganisms are grown in the bioreactor in the presence of oxygen and nutrients, with an added carbon source. Methane will be used as the carbon source in one of the bioreactors and toluene will be used in the other. Degradation of TCE occurs fortuitously during utilization of the carbon source. The effluent produced should have lower concentrations of the initial volatile organic contaminants (VOCs).

Fig: 2.1 PROCESS FLOW DIAGRAM
CO-METABOLIC TECHNIQUES PROJECT

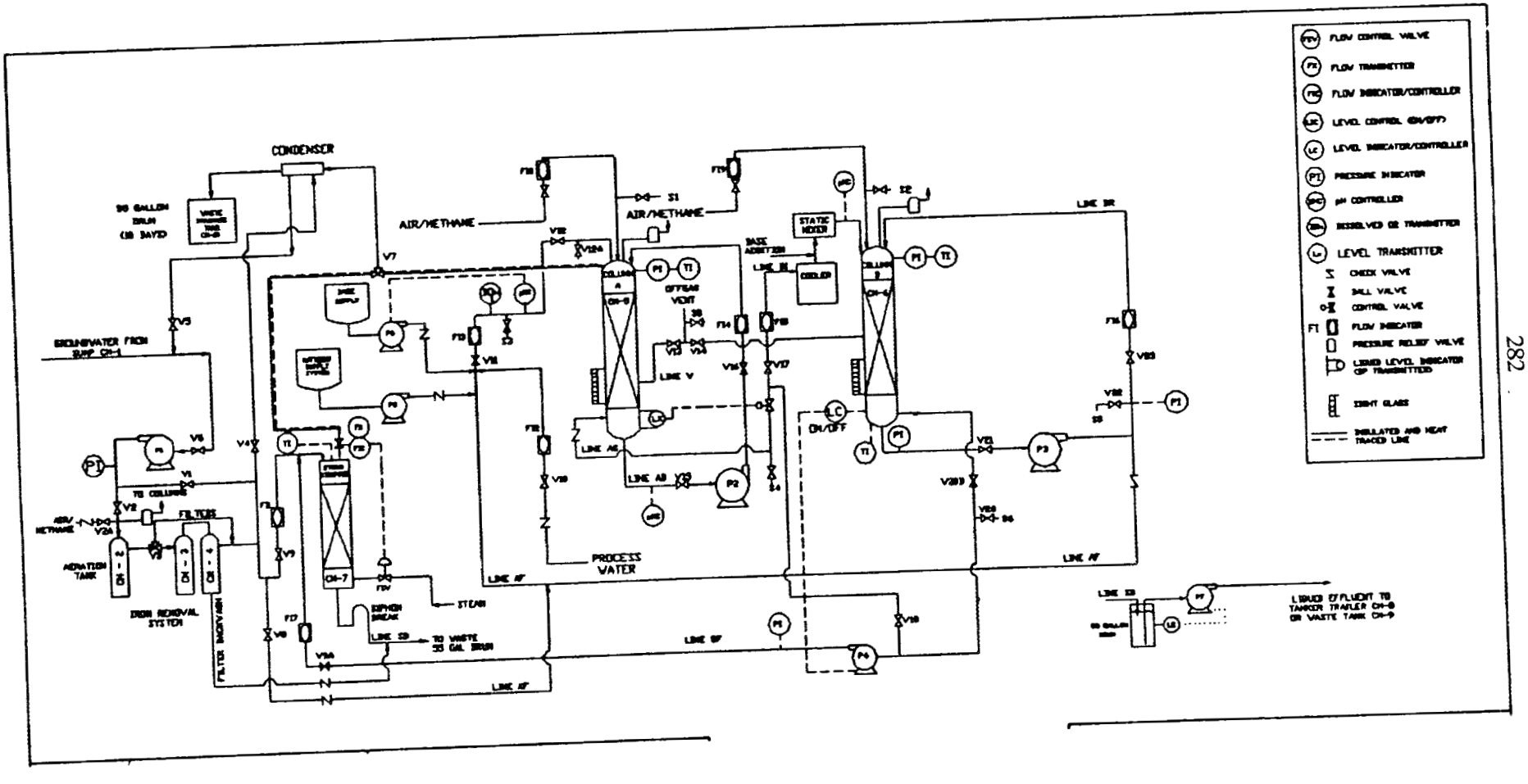

282

3. PROGRAM MANAGEMENT

The readiness review of the CMTFDF is managed by the K-25 Site manager, L. E. Hall; The K-25 Site Quality Assurance Department manager, E. L. Alread; and the CMTFDF project manager S. E. Herbes

3.1 K-25 SITE MANAGER

The Energy Systems Senior Representative for the CMTFDF project is L. E. Hall, K-25 Site manager. He will appoint a Readiness Review Board that will monitor the readiness of the CMTFDF and will make recommendations for proceeding to the required operating status.

3.2 K-25 SITE QA DEPARTMENT MANAGER AND THE CMTFDF PROJECT MANAGER

The K-25 Site Quality Assurance Department manager, E. L. Alread; and the CMTFDF project manager S. E. Herbes are responsible for determining whether the CMTFDF needs to undergo a formal readiness review, and they have identified the facility as needing this formal readiness review. They have appointed the Operational Readiness Team (ORT), which is directly responsible for monitoring the facility's readiness for operation. The CMTFDF Project Manager is responsible for evaluating the readiness review plan, coordinating the approval of the plan, and requesting that the RRB be convened to verify the CMTFDF readiness to proceed to the required operating status.

3.3 THE READINESS REVIEW BOARD

3.3.1 The Readiness Review Board Charter

The Readiness review board (RRB) is an independent management group appointed by upper level management. The group has been established to (1) provide independent oversight of the readiness process, (2) approve the readiness review plan and criteria, (3) verify the readiness process validity, (4) evaluate risk of proceeding to the next work activity and (5) recommend actions regarding proceeding supported by readiness criteria.

3.3.2 The Board Members

W. A. Miller, K-25 Quality Assurance Department, RRB Chairman
L. V. Gibson, K-25 Technical Services Department
C. C. Watson, K-25 Health, Safety and Environmental Division

3.4 THE OPERATIONAL READINESS TEAM (ORT)

3.4.1 The Operational Readiness Team Charter

The Operational Readiness Team is a management appointed multi-disciplined group that has been established to (1) evaluate the state of readiness of the CMTFDF to operate, (2) identify and validate supportive objective evidence of readiness, and (3) assist the program manager in presenting the evidence of readiness to the Readiness Review Board. Specific responsibilities include:

* Preparation of the readiness review plan

* Use of appropriate analytical techniques to ensure full coverage of all activities

* Preparation of the readiness criteria

* Identification and verification of the visible objective evidence

* Monitoring and determining the state of readiness and reporting this information to K-25 Site Manager

* Presentations to the Readiness Review Board on the state of readiness

The milestones of the Team's activities will include the review of the evaluation of the readiness of facilities and equipment, the readiness of materials, the readiness of operating personnel and training, the readiness of plans, permits and procedures, and the readiness of support services.

3.4.2 The Team Members

The ORT members are:

B. R. Bailey	K-25 Site QA Specialist
T. L. Donaldson	CMTFDF Project Task Leader
S. E. Herbes	CMTFDF Project Manager
H. l. Jennings	CMTFDF Project Engineer
M.I. Morris	Demonstration Coordinator and ORT Chairman

3.5 THE TEAM BOARD INTERFACE

The ORT has the responsibility to provide the RRB with the verification data necessary to validate the readiness for proceeding to the next increment of work. The ORT will make this information available in progress reports and meetings held to review readiness.

The RRB will be responsible to review the data, evaluate the risks associated with operation, and make recommendations regarding the facility's readiness for operation.

4. THE REVIEW METHODOLOGY

4.1 THE OPERATIONAL READINESS PROCESS

The Operational Readiness Process (ORP) is a management tool that establishes and verifies the state of readiness of an activity. The process began with the creation of this plan and the initial readiness criteria. Detailed criteria will be formulated by the team approved by the Board and carried out. The process concludes with the RRB's documented decision on the facility's state of readiness for operation and any accompanying recommendations that need to be addressed by the program management.

4.2 THE READINESS REVIEW CRITERIA

The readiness criteria are the standards by which the CMTFDF will be judged ready for operation. The review criteria are being defined according to their specific applicability to the activity, and the generic criteria have been defined for major milestones or events that need to be accomplished to determine readiness. The Operational Readiness Team used the comprehensive operational readiness tree (a positive logic tree), developed by Martin Marietta Energy Systems, Inc. using the basic readiness tree and lessons learned, to identify the readiness criteria.

4.2.1 The Operational Readiness Tree for the CMTFDF

The Operational Readiness Tree is being used by the ORT for identifying everything that needs to be evaluated to determine the facility's readiness for operation. This tree, which is shown in Fig. 4.1, is a tool that will guard against any omission of an item that could affect system performance.

4.2.2 Readiness Review Criteria To Be Evaluated

Specific review criteria to be evaluated will include an evaluation of the state of readiness of facilities and equipment, materials, manpower and training, plans and procedures, support services, and engineering activities. Included with these criteria are the primary responsible ORT members responsible for ensuring that these criteria/activities are completed.

These specific criteria for evaluation of the CMTFDF are provided in the appendixes as follows:

Appendix A: FACILITIES AND EQUIPMENT

Appendix B: MANAGERIAL/REGULATORY CONTROL SYSTEMS AND PROCEDURES

Appendix C: PERSONNEL

Co-Metabolic Bioreactor Demonstration Project Readiness Tree

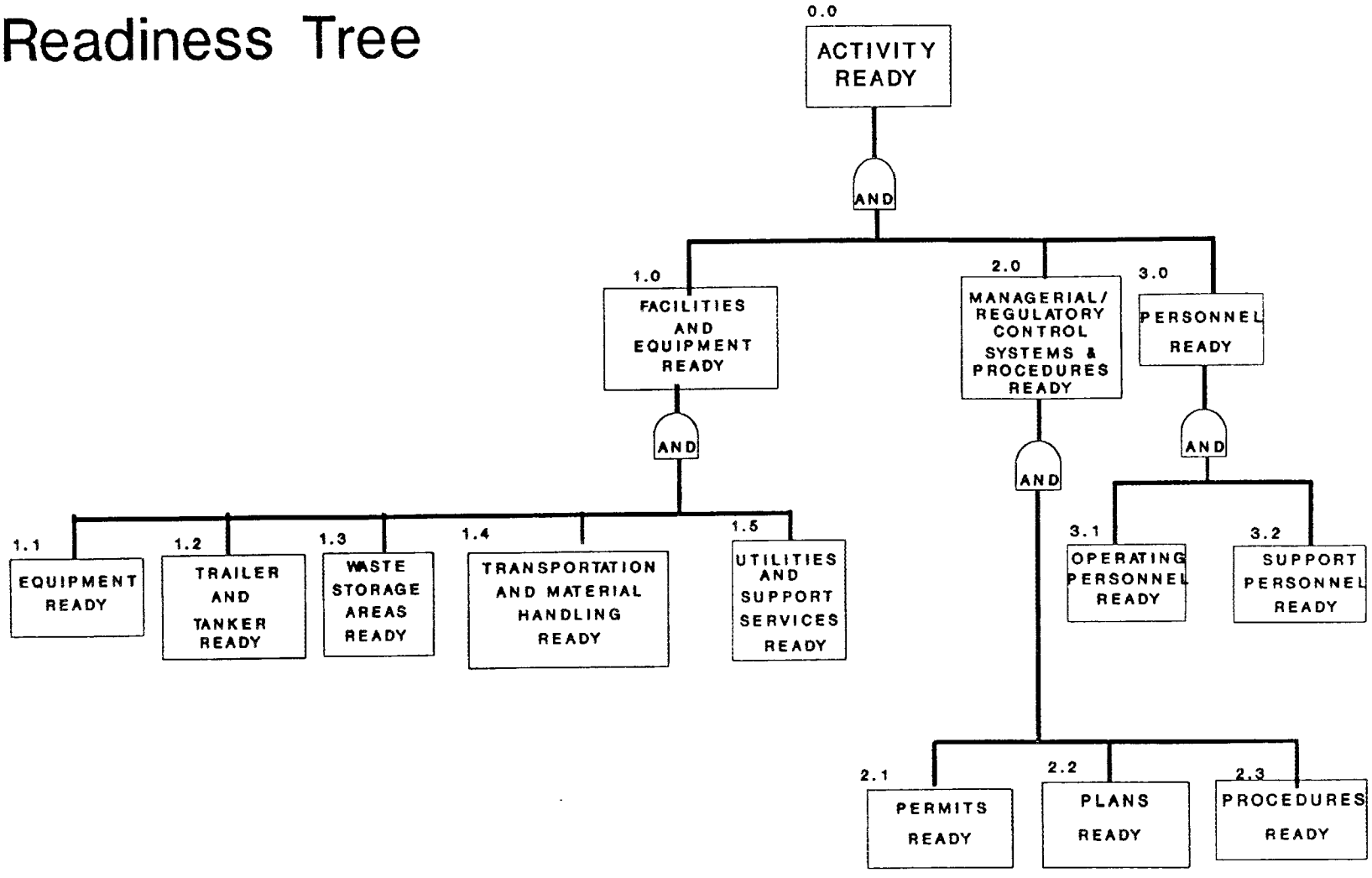

September 4, 1991

September 9, 1991

APPENDIX A
READINESS REVIEW CRITERIA
for the
FACILITIES and EQUIPMENT, SECTION 1.0
of the
CO-METABOLIC TECHNIQUES FIELD DEMONSTRATION FACILITIES

1.1 Is the equipment to be used in these facilities ready for operation based on the remaining criteria in section 1.1?

1.1.1 Has the equipment being used in these facilities been evaluated to ensure that OSHA regulations are being met? (K-25 Site Safety Engineer)

1.1.2 Has the applicable equipment being used in these facilities been calibrated and do calibration records exist? (Project Engineer)

1.1.3 Is the equipment being used in these facilities ready for operation based on the remaining criteria in section 1.1.3? (Project Engineer)

1.1.3.1 Do drawings exist for the applicable equipment? (Project Engineer)

1.1.3.2 Has the equipment been taken into consideration in the Safety Study (Safety Assessment)? (System Safety Engineer)

1.1.4 Has the equipment been installed properly based on the remaining criteria located in section 1.1.4?

1.1.4.1 Have the applicable equipment installation inspection reports been issued? (QA Inspection Team Leader)

1.1.4.2 If applicable, have non-conformances associated with the installation inspections been resolved and are the resolutions documented? (QA Inspection Team Leader)

1.1.5 Have the equipment operational tests been completed based on the remaining criteria in section 1.1.1.5 and is documented evidence available?

1.1.5.1 Have the individual unit tests been completed for the applicable equipment? (Project Engineer)

1.1.5.2 Have the integrated tests been completed? (Project Engineer)

1.1.6 Have the equipment operating procedures been issued; are they available to the end user; and do they include the operational and design limits? (Project Engineer)

1.1.7 Has all the equipment been marked/labeled and in agreement with the operating procedures? (Project Engineer)

1.2 Are the trailer and tanker ready for operation based on the remaining criteria in section 1.2

1.2.1 Is the trailer ready for operation based on the remaining criteria in section 1.2.1

1.2.1.1 Has the trailer been inspected to ensure that OSHA regulations are being met? (K-25 Site Safety Engineer)

1.2.1.2 Are the electrical systems in compliance with all applicable regulations and site requirements (ORNL Safety Engineer)

1.2.1.3 Does the HVAC systems meet all process requirements? (Project Engineer)

1.2.1.4 Is the trailer blocked and stable? (Project Engineer)

1.2.2 Is the tanker ready for operation based on the remaining criteria in section 1.2.2

1.2.2.1 Has the tanker been inspected to ensure that DOT regulations are being met? (Transportation Inspection Department)

1.2.1.2 Has the tanker been hydrostaticly tested? (Transportation Inspection Department)

1.2.1.3 Has the tanker been grounded in the storage area? (Project Engineer)

1.3 Are the waste storage areas associated with these facilities ready based on the remaining criteria in section 1.3?

1.3.1 Are the applicable waste containers properly identified and stored per the applicable requirements? (Project Engineer)

1.3.2 Are the storage areas in compliance with EPA/MMES/OSHA requirements? (K-25 Site Environmental Compliance Manager)

1.4 Is the Transportation and Material Handling system to be utilized by the facilities ready for operation based on the remaining criteria in section 1.4?

1.4.1 Are there truck cabs qualified and available to haul the tanker to the CNF facility? (K-25 Waste Management Transportation Manager)

1.4.2 Are the drivers qualified to haul the tanker? (K-25 Site Waste Management Transportation Manager)

1.5 Are the Utilities and Support services to be utilized by these facilities ready for operation based on the remaining criteria in section 1.5?

1.5.1 Has an adequate supply of electrical power been provided to the facilities and has it been tested to insure it is operational? (Project Engineer)

1.5.2 Does an adequate supply of required emergency equipment exist(fire extinguishers, protective equipment, etc.) at each facility and is this equipment easily accessible to the end user? (QA Inspection Team Leader)

1.5.3 Has an adequate supply of potable water been provided to the system and has it been tested to insure it is operational? (Project Engineer)

1.5.4 Have the applicable air supply systems (i.e., plant air, instrument air, breathing air, etc.) been supplied to these facilities and have the air supply systems been tested to ensure they are functional and operational? (Project Engineer)

1.5.5 Has the methane supply system been tested to ensure it is operational? (Project Engineer)

1.5.6 Has an adequate supply of steam been provided to the system and has it been tested to insure it is operational? (Project Engineer)

September 9, 1991

APPENDIX B
READINESS REVIEW CRITERIA
for the
MANAGERIAL/REGULATORY CONTROL SYSTEMS AND PROCEDURES, SECTION 2.0
of the
CO-METABOLIC TECHNIQUES FIELD DEMONSTRATION FACILITIES

2.1 Are the permits to be used for this project ready for operation based on the remaining criteria in section 2.1?

2.1.1 Has a NEPA determination been made and is the documentation in place? (Project Demonstration Coordinator)

2.1.2 Is an air permit required, and, if so, is it in place? (K-25 Site Environmental Compliance)

2.1.3 Has the NPDES permit for the CNF facility been revised to accept CMTFDF waste? (K-25 Site Environmental Compliance)

2.1.4 Have the waste storage areas been permitted? (K-25 Site Environmental Compliance)

2.1.5 Are there other permits required by EPA, TDHE, and/or MMES and are they in place? (K-25 Site Environmental Compliance)

2.1.6 Have Safety requirements been evaluated? (System Safety Engineer)

2.2 Are the Plans to be used for this project ready for operation based on the remaining criteria in section 2.2?

2.2.1 Have the Quality Assurance requirements been defined, procedures documented, approved, and made available at their point of use? (QA Specialist)

2.2.2 Have the Application Testing requirements been defined, procedures documented, approved, and made available at their point of use? (Project Demonstration Coordinator)

2.2.3 Have the Health and Safety requirements been defined, procedures documented, approved, and made available at their point of use? (Project Demonstration Coordinator)

2.2.4 Have the Waste Management requirements been defined, procedures documented, approved, and made available at their point of use? (Project Demonstration Coordinator)

2.2.5 Have the Readiness Review requirements been defined, procedures documented, approved, and made available at their point of use? (Project Demonstration Coordinator)

2.2.6 Have the Contingency requirements been defined, procedures documented, approved, and made available at their point of use? (Project Demonstration Coordinator)

2.2.7 Have the Sampling requirements been defined, procedures documented, approved, and made available at their point of use? (Project Task Leader)

2.3 Are the procedures to be used for the project ready for operation based on the remaining criteria in section 2.3?

2.3.1 Have the equipment operating procedures been prepared, issued and available at their point of use? (Project Engineer)

2.3.2 Have the sampling procedures been prepared, issued and available at their point of use? (Project Engineer)

September 9, 1991

APPENDIX C
READINESS REVIEW CRITERIA
for the
PERSONNEL, SECTION 3.0
of the
CO-METABOLIC TECHNIQUES FIELD DEMONSTRATION FACILITIES

3.1 Are the operating personnel who will operate the equipment in these facilities ready for operation based on the remaining criteria in section 3.1?

3.1.1 Are operating personnel identified and available for the project? (Project Manager)

3.2.1 Are the operating personnel trained to operate this equipment based on the remaining criteria in section 3.2.1?

3.2.1.1 Do the operating personnel have 24 hours of OSHA training within the last 12 months; if longer than 12 months then; do the operating personnel have 8 hours of OSHA update training within the last 12 months? (Project Manager)

3.2.1.2 Do the operating personnel have the K-25 site general employee training (GET)? (K-25 Site training)

3.2.1.3 Have the operating personnel had the waste certification officer training? K-25 site training)

3.2.1.4 Are there other training requirements, Governmental, MMES and/or site specific? (K-25 site training)

3.2.1.5 Do training records exist for all training received by the operating personnel? (ORNL site training)

3.1.3 Do the operating personnel meet the K-25 site security requirements? (K-25 Site Security)

3.2 Are the personnel who will support the operation of these facilities ready based on the remaining criteria in section 3.2?

3.2.1 Have K-25 laboratory services been notified and are they available and trained to support the project? (Project Manager)

3.2.2 Have K-25 Waste Management services been notified and are they available and trained to support the project? (Project Manager)

3.2.3 Have K-25 Maintenance services been notified and are they available and trained to support the project? (Project Manager)

INTERNAL DISTRIBUTION

1. R. E. Adams
2. R. K. Adkinsson
3. M. B. Baer
4. C. L. Baker
5. L. D. Bates
6 J. M. Begovich
7 J. T. Bell
8. C. E. Benson
9. J. B. Berry
10. W. D. Bostick
11. D. J. Bostock
12. T. A. Bowers
13 K. Bracic
14. J. T. Bradbury
15. H. M. Braunstein
16. W. A. Brooke
17. C. H. Brown, Jr.
18. V. J. Brumback
19. R. D. Bundy
20. G. E. Butterworth, III
21. T. R. Butz
22. C. H. Byers
23. V. B. Campbell
24. R. M. Canon
25. H. M. Clancy
26. O. K. Clotfelter
27. S. J. Colburn
28. E. D. Collins
29. G. D. Conner
30. K. W. Cook
31. R. B. Craig
32. A. G. Croff
33. N. S. Dailey
34. F. P. Delozier
35. T. L. Donaldson
36. N. W. Durfee
37. R. S. Eby
38. J. L. Epler
39. R. L. Faulkner
40. C. W. Francis
41. C. E. Frye
42. W. Fulkerson
43. S. B. Garland
44. R. K. Genung
45. C. W. Gehrs
46. S. M. Gibson
47. L. V. Gibson, Jr.
48. R. W. Glass
49. N. G. Grant
50. R. G. Grubb
51. M. R. Guerin
52. R. Hall
53. W. R. Hamel
54. J. L. Haymore
55. F. K. Heacker
56. J. E. Heiskell, Jr.
57. H. M. Henson
58. S. E. Herbes
59. J. R. Hightowr
60. D. P. Hoffman
61. R. K. Holmes
62. C. L. Johnson
63. E. K. Johnson
64-73. R. L. Jolley
74. L. S. Jones
75. G. E. Kamp
76. J. M. Kennerly
77. B. L. Kimmel
78. R. R. Kimmitt
79. J. W. Koger
80. A. J. Kuhaida, Jr.
81. D. B. Lloyd
82. L. W. Long
83. R. Machanoff
84-93. A. P. Malinauskas
94-99. C. P. McGinnis
100. S. A. Meacham
101. L. J. Mezga
102. R. P. Migun
103. R. E. Millemann
104. T. H. Monk
105-114. M. I. Morris
115. E. B. Munday
116. J. M. Napier
117. B. D. Patton
118. G. A. Person
119. C. H. Peterson
120. K. E. Plummer
121. J. G. Pruett
122. D. R. Reichle

123. E. J. Roy
124. Don Schaefferkoetter
125. Chuck Scheibly
126-128. R. M. Schilling
129. S. L. Schrock
130. C. D. Scott
131. J. W. Shaw
132. M. J. Shelton
133. R. L. Siegrist
134. D. W. Simmons
135-144. S. P. N. Singh
145 R. L. Snipes
146. B. P. Spalding
147. A. E. Stephens
148. R. E. Swatzell
149-158. D. W. Swindle
159. T. Tamura
160. W. W. Thompson
161. S. D. Van Hoesen
162. R. I. Van Hook
163. T. Vo-Dinh
164. E. A. Wachter
164-174. J. S. Watson
175. H. D. Whitehead, Jr.
176. J. H. Wilson
177. H. R. Yook
178. Central Research Library
179. Document Reference Section
180-181. Laboratory Records
182. Laboratory Records - RC
183 ORNL Patent Section - RC
184. EMD Document Management Center
185-193. ER Document Management Center

EXTERNAL DISTRIBUTION

194. W. D. Adams, DOE, FOB, Rm. 2116, Oak Ridge, TN 37830
195. T. D. Anderson, U.S. DOE Headquarters, Trevion Bldg. II, Suite 400, 12800 Middlebrook Road, Germantown, MD 20874
196. W. R. Bibb, DOE, FOB, Rm. 309, Oak Ridge, TN 37830
197. R. E. Blake, Portsmouth Plant, P. O. Box 628, Piketon, OH 45661
198. D. G. Cope, PGDP, P.O. Box 1410, C743-1, MS-105A, Paducah, KY 42001
199. P. H. Edmonds, Radian, 120 S. Jefferson Circle, Oak Ridge, TN 37830
200. Clyde Frank, EG&G, Tri-County, MS-7606
201. C. S. Gist, DOE, FOB, Rm. 2116, Oak Ridge, TN 37830
202. S. T. Grady, SAIC, 800 Oak Ridge Turnpike, Oak Ridge, TN 37830
203. M. R. Jugan, DOE, FOB, Rm. 2116, Oak Ridge, TN 37830
204. M. Lankford, U.S. DOE Headquarters, Trevion Bldg. II, Suite 400, 12800 Middlebrook Road, Germantown, MD 20874
205. Tom Mayfield, FEDC, MS 8218, Oak Ridge, TN 37830
206. J. P. Moore, DOE-OR, P.O. Box 2001, Oak Ridge, TN 37831
207. T. Myrick, SAIC, 800 Oak Ridge Turnpike, Oak Ridge, TN 37830
208. W. L. Richards, PGDP, P.O. Box 1410, C743-T01, Paducah, KY 42001
209. R. C. Sleeman, DOE, FOB, Rm. 216, Oak Ridge, TN 37830
210. R. H. Snyder, Portsmouth Plant, P. O. Box 628, Piketon, OH 45661
211. Office of Assistant Manager, Energy Research and Development, DOE-OR, P.O. Box 2001, Oak Ridge, TN 37831
212-221. Office of Scientific and Technical Information, P.O. Box 62, Oak Ridge, TN 37831