MARTIN MARIETTA ENERGY SYSTEMS LIBRARIES

3 4456 0350534 8

MARTIN MARIETTA

ORNL/ER/Sub/87-99053/49

ENVIRONMENTAL RESTORATION PROGRAM

Evaluation of Closure Alternatives for the Building 3001 Storage Canal at Oak Ridge National Laboratory, Oak Ridge, Tennessee

OAK RIDGE NATIONAL LABORATORY
CENTRAL RESEARCH LIBRARY
CIRCULATION SECTION
4500N ROOM 175
LIBRARY LOAN COPY
DO NOT TRANSFER TO ANOTHER PERSON
If you wish someone else to see this report, send in name with report and the library will arrange a loan.
UCN-7969 (3 9-77)

ENERGY SYSTEMS

ER

MANAGED BY
MARTIN MARIETTA ENERGY SYSTEMS, INC.
FOR THE UNITED STATES
DEPARTMENT OF ENERGY

UCN-17560 (6 7-91)

Bechtel National, Inc./CH2M Hill/ERCE/PEER
Oak Ridge, Tennessee

contributed to the preparation of this document and should not be considered eligible contractors for its review.

This report has been reproduced directly from the best available copy.

Available to DOE and DOE contractors from the Office of Scientific and Technical Information, P.O. Box 62, Oak Ridge, TN 37831; prices available from 615-576-8401, FTS 626-8401.

Available to the public from the National Technical Information Service, U.S. Department of Commerce, 5285 Port Royal Rd., Springfield, VA 22161.

ORNL/ER/Sub/87-99053/49

Environmental Restoration Division
ORNL Environmental Restoration Program

Evaluation of Closure Alternatives for the Building 3001 Storage Canal at Oak Ridge National Laboratory, Oak Ridge, Tennessee

Date Issued—February 1992

Prepared by
Bechtel National, Inc.
CH2M HILL/ERCE/PEER/IT
P.O. Box 350
Oak Ridge, Tennessee 37830
under subcontract 30B-99053C

Prepared for
U.S. Department of Energy
Office of Environmental Restoration and Waste Management
under budget and reporting code EW 20

OAK RIDGE NATIONAL LABORATORY
Oak Ridge, Tennessee 37831-6285
managed by
MARTIN MARIETTA ENERGY SYSTEMS, INC.
for the
U.S. DEPARTMENT OF ENERGY
under contract DE-AC05-84OR21400

MARTIN MARIETTA ENERGY SYSTEMS LIBRARIES
3 4456 0350534 8

CONTENTS

FIGURES v

ACRONYMS vii

EXECUTIVE SUMMARY ix

1. INTRODUCTION 1
   - 2.1 STATEMENT OF PROBLEM 2
   - 2.2 PHYSICAL DESCRIPTION OF THE CANAL 2
   - 2.3 RADIOLOGICAL SOURCES/CHEMICAL CONTAMINANTS 2
   - 2.4 PREREQUISITES 7

3. AVAILABLE TECHNOLOGY 8
   - 3.1 CONCRETE SCARIFICATION 8
   - 3.2 CANAL WATER DEMINERALIZATION 8
   - 3.3 SEDIMENT REMOVAL 13
   - 3.4 CONCRETE REMOVAL 17
   - 3.5 BENTONITE CLAY SEAL 18
   - 3.6 CAULK/PATCH LEAKY JOINTS 18
   - 3.7 FIXATIVES 18
   - 3.8 CANAL LINER 19
   - 3.9 SOLIDIFY SEDIMENT 19
   - 3.10 SOLIDIFY WATER 19
   - 3.11 CANAL WATER REMOVAL 23
   - 3.12 BACKFILL CANAL 24
   - 3.13 SHIELDING 25
   - 3.14 SLURRY WALL AROUND CANAL 25
   - 3.15 PUMP-DOWN WELLS 27

4. INTERIM CLOSURE PLANS 28
   - 4.1 SOURCE CONTROL 28
   - 4.2 SOURCE REDUCTION 28
   - 4.3 LEAK RATE REDUCTION 29
   - 4.4 LEAK RATE AND SOURCE REDUCTION 29
   - 4.5 LINE CANAL 30
   - 4.6 LINER AND CLAY 30
   - 4.7 DRAIN AND STABILIZE 31
   - 4.8 REDUCE SOURCE AND DRAIN 31
   - 4.9 DRAIN AND SAND SHIELD 32
   - 4.10 PATCH AND SHIELD 32
   - 4.11 PATCH UNDERWATER 33
   - 4.12 SOLIDIFY SEDIMENT IN SITU 33
   - 4.13 CLAY AND GROUT SEALS 34

5. EVALUATION OF INTERIM REPAIR PLANS 35
5.1 SHORT-TERM EFFECTIVENESS 35
5.2 IMPLEMENTABILITY 35
5.3 COST AND SCHEDULE 36
5.4 SAFETY 36
5.5 FINAL CLOSURE IMPACT 36
5.6 PRELINIMARY EVALUATION 36
5.7 COST AND SCHEDULE EVALUATION 40

6. RECOMMENDED INTERIM REPAIR PLANS 50
6.1 BASIS OF SELECTION 50

7. REFERENCES 52

Appendix A: 3001 STORAGE CANAL SEDIMENT HANDLING ALTERNATIVES EVALUATION A-1

Appendix B: HEALTH RISK ASSESSMENT FOR THE 3001 STORAGE CANAL B-1

Appendix C: DOSE ASSESSMENT OF CANAL SEDIMENT DISPOSAL PLANS C-13

FIGURES

1. Canal plan 3
2. Canal sections 5
3. Technology screening 9
4. Canal scarifier 11
5. Canal vacuum system 15
6. Canal liner plan, sections and details 21
7. Canal shielding plan and details 25
8. Interim plan screening summary 38
9. Interim closure plan logic 39
10. Canal remediation plans 41
11. Plan 4.1 "Source control" schedule 44
12. Plan 4.3 "Leak rate reduction" schedule 45
13. Plan 4.5 "Line canal" schedule 46
14. Plan 4.6 "Liner and clay" schedule 47
15. Plan 4.8 "Reduce source and drain" schedule 48

ACRONYMS

ALARA	as low as reasonably achievable
ARARS	applicable or relevant and appropriate requirements
BNI	Bechtel National, Inc.
CH	contact-handled
DOE	U.S. Department of Energy
DOT	U.S. Department of Transportation
EP	Extraction Procedure
EPA	U.S. Environmental Protection Agency
FFA	Federal Facilities Agreement
HEPA	high-efficiency particulate air
HVAC	heating, ventilation and air conditioning
LLW	low-level waste
MVST	Melton Valley storage tanks
NPDES	National Pollutant Discharge Elimination System
NCP	National Contingency Plan
NRC	Nuclear Regulatory Commission
ORR	Oak Ridge Reservation
PVC	polyvinylchloride
PWTS	Process Waste Treatment System
RAP	Remedial Action Program
RCRA	Resource Conservation and Recovery Act
RH	remote-handled
SEN	Secretary of Energy Notification
SWSA	Solid Waste Storage Area
TBC	to be considered
TCLP	Toxicity Characteristic Leaching Procedure
TDHE	Tennessee Department of Health and Environment
TRU	transuranic
TSD	treatment, storage and disposal
UST	underground storage tank
WAC	waste acceptance criteria
WIPP	waste isolation pilot plant
WHPP	waste handling and packaging plant

EXECUTIVE SUMMARY

The Bldg. 3001 Storage Canal at Oak Ridge National Laboratory (ORNL) is leaking approximately 400 gal per day. The water is slightly contaminated and a sediment containing radionuclides and heavy metals exists on the bottom of the canal. This report presents an evaluation of interim closure options for the canal.

A variety of potentially applicable technologies was screened for applicability to portions of this task. Potentially applicable technologies were then assembled into 13 interim closure plans. The plans were evaluated against the following criteria:

- Short-term effectiveness
- Implementability
- Cost and schedule
- Safety
- Final closure impact

The five highest rated plans were subjected to more detailed cost and schedule estimates. Based on these estimates, two plans were recommended for further consideration by ORNL/U.S. Department of Energy (DOE). The plan known as "Source Control" calls for removal of the sediment followed by enhanced demineralization of the canal water. This plan allows the leak to continue, but with "clean" water only. The other recommended plan consists of sediment removal followed by use of bentonite clay dispersion to slow the leak. A flexible membrane liner would then be installed underwater to stop the leak.

Appendix A of this report presents an evaluation of handling alternatives for the sediment that will be removed from the canal. In summary, handling the sediment as a dilute slurry with the existing liquid low-level waste (LLLW) system was rated superior to solidification.

Appendix B is a risk analysis that examines the current condition and leak rate of the canal. The analysis concludes that there is no significant health risk from the leak in the 3001 Storage Canal.

Appendix C is a dose assessment for one proposed solidification process versus use of the existing LLW system. Solidification was calculated to result in an exposure of 22.82 on SV (2.282 mrem) versus 0.65 Msv (65 mrem) for use of LLLW.

1. INTRODUCTION

The Bldg. 3001 Storage Canal at ORNL is leaking approximately 400 gal of water per day. This report presents the Bechtel National Inc. (BNI) Team's evaluation of plans and presents recommendations for interim closure alternatives to stop the release of radionuclides and potential release of heavy metals into the environment. This is a conceptual evaluation and does not include detailed engineering of physical mitigation methods. The alternatives address only interim closure measures and not final decommissioning of the canal.

2. BACKGROUND

2.1 STATEMENT OF PROBLEM

The storage canal associated with the graphite reactor at ORNL is leaking approximately 400 gal of water per day. The leak path is unknown, but is most likely through the various construction joints in the canal. This water is slightly contaminated with radionuclides and heavy metals. Tests have shown that the heavy metal content of the water is below Resource Conservation and Recovery Act (RCRA) toxicity limits (ORNL 1990a). In addition, there is an estimated 1/2-in. layer of sediment on the bottom of the canal which is contaminated with cadmium and lead above RCRA limits. The canal walls are made of bare concrete which is expected to be contaminated with both radionuclides and heavy metals. The presence of the Graphite Reactor Historic Site Museum directly above the north end of the canal and the offices in the building above the canal are constraints on the allowable gamma radiation exposure rates during and after closure.

If no corrective measures are taken, radionuclides, estimated at 50 μCi/d, may enter the environment through an unmonitored pathway. In addition, the possibility of release of heavy metals into the environment is a future liability. The DOE/ORNL has stated that the no-action alternative is unacceptable, so this analysis does not consider that course of action.

2.2 PHYSICAL DESCRIPTION OF THE CANAL

The canal is located in the basement of Bldg. 3001 and extends, underground, to Bldg. 3019 in an "L" shape. The north-south leg, under Bldg. 3001, is approximately 76-ft long and is 7-ft wide. The east-west leg, extending under Bldg. 3019 is about 76-ft long, but is only 5-ft wide. At the north end, directly below the graphite reactor, the canal has a 7- by 8-ft pit, about 20-ft deep. The lower pit walls and floor are lined with ceramic tile set in a waterproof grout. The remainder of the canal slopes from 10.5 ft at the Bldg. 3019 end to 11.5 ft at the Bldg. 3001 end. The water in the canal also provides a means of isolating the atmospheres of the canal room from Bldg. 3019. Figs. 1 and 2 present plan and section views of the canal.

2.3 RADIOLOGICAL SOURCES/CHEMICAL CONTAMINANTS

The radiological condition of the canal structure is not completely defined. No detailed health physics surveys or radiological samples of the canal structure are available. According to the ORNL release report (ORNL 1990b), approximately 50 μCi/d are being released by the 400-gal/d leak. This implies a radionuclide concentration of 3×10^{-5} μCi/Ml--a concentration that can be processed by the on-site, low-level liquid waste (LLLW) treatment system. Radiological analysis of the sediment showed significant concentrations of Cs-137, Co-60, and Pu-239/240 (ORNL 1990a). In addition, beta radiation indicating significant Sr-90 was detected. The concrete walls of the canal are expected to have absorbed significant quantities of cesium and strontium and probably have cobalt particles adhering to them. This was partially confirmed by the reported increase in general area dose rates above the canal from less that 1 mrem/h to approximately 200 mrem/h when the canal water was lowered, exposing a 1-ft band of the contaminated concrete.

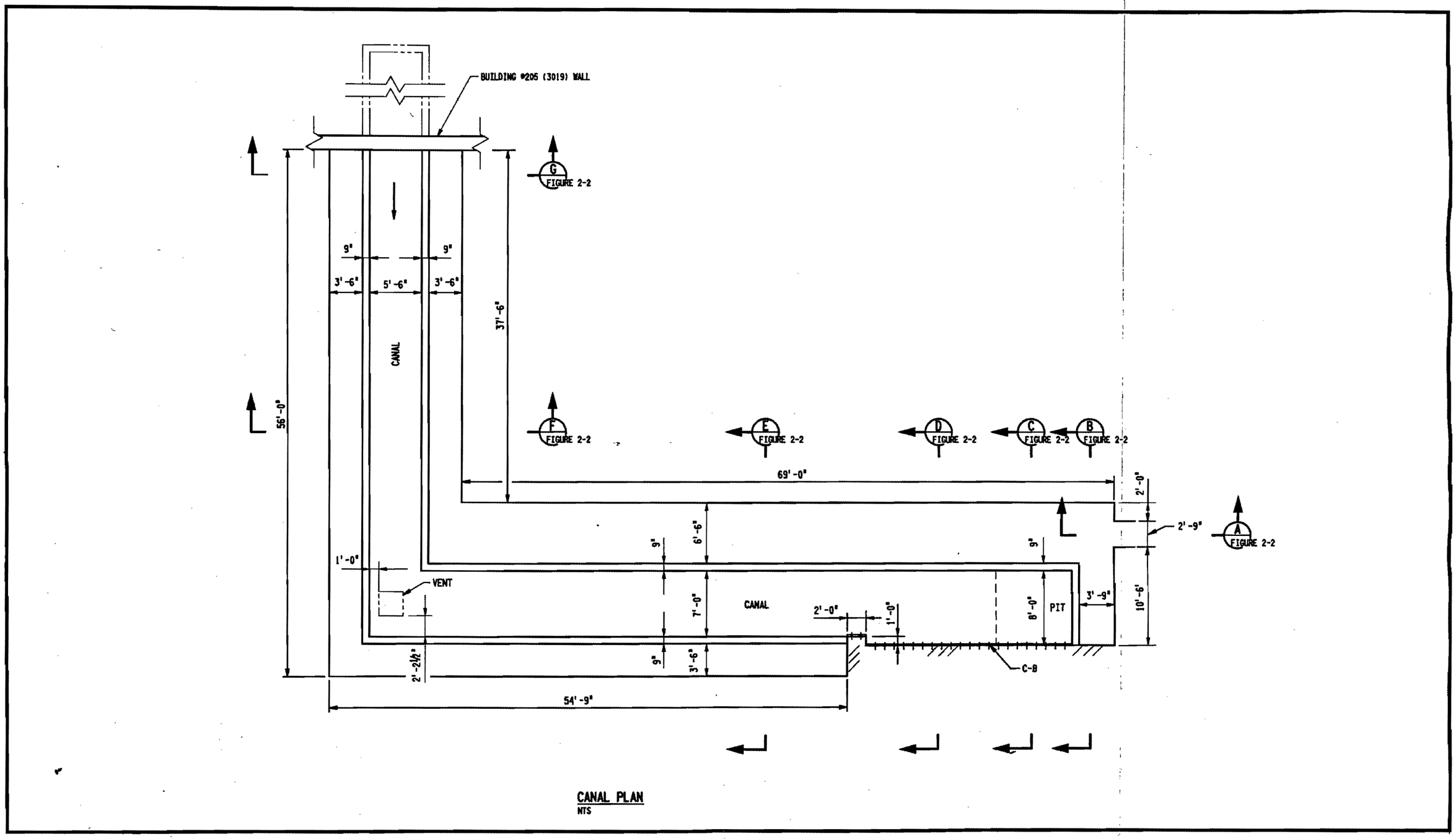

WAG91 91F002.DGN

Fig. 1. Canal plan.

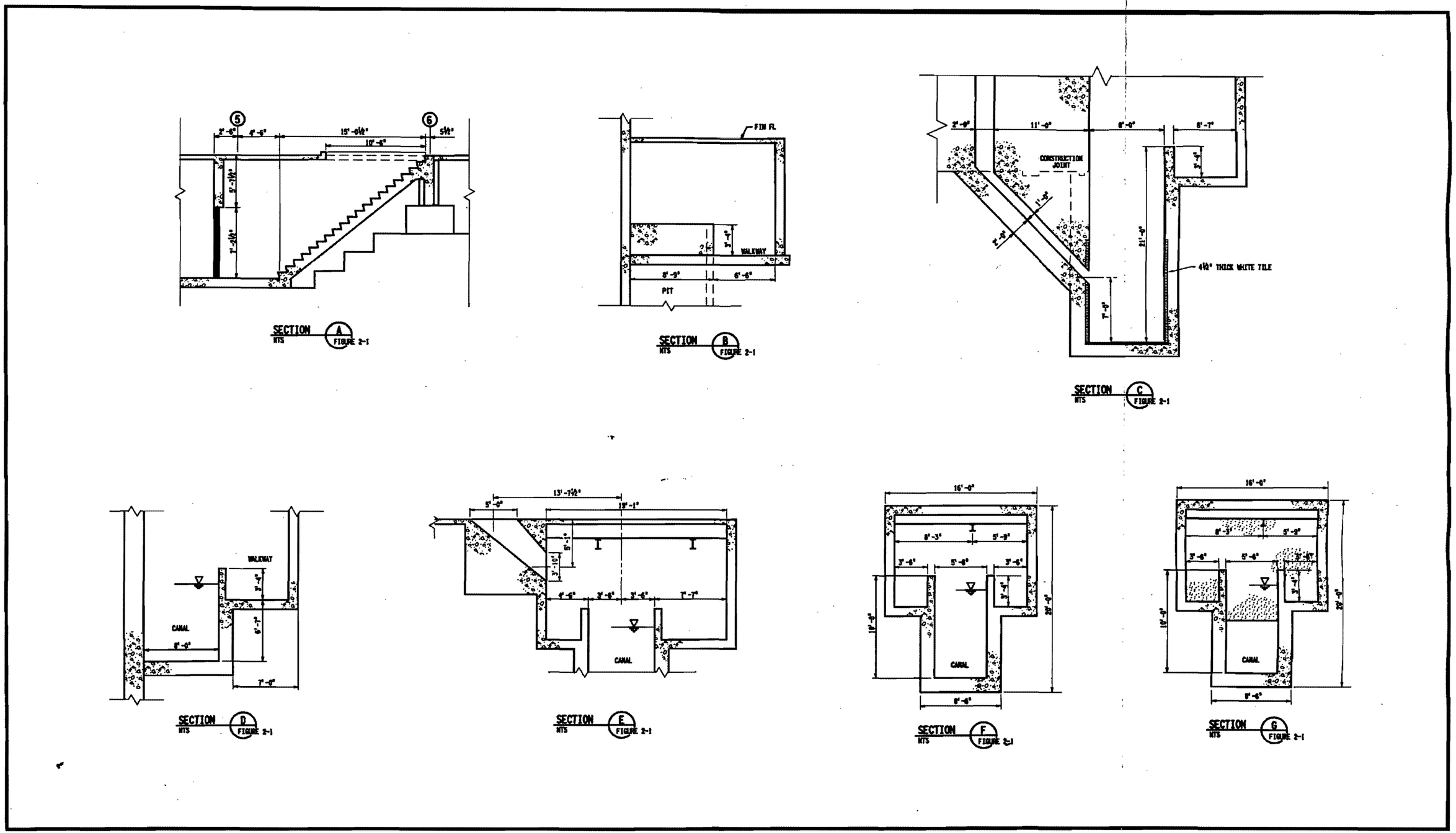

WAG91 91F003.DGN

Fig. 2. Canal sections.

The results of the recent water and sediment sampling in the canal show that the water is well below hazardous limits for heavy metals. Conversely, the sediment tests, exceeded the U.S. Environmental Protection Agency (EPA) toxicity characteristic leaching procedure (TCLP) hazardous limits for cadmium and lead (ORNL 1990a).

2.4 PREREQUISITES

Before beginning remediation work, a number of prerequisites must be satisfied to meet health and safety requirements, to achieve as low as reasonably achievable (ALARA) radiological exposure, and to achieve access objectives.

Some overhead pipes in the canal area were once covered with asbestos insulation and the possibility of loose asbestos contamination in the canal room exists. In addition, provisions should be made for radiological decontamination with water flush, superheated water impingement, or high-efficiency particulate air (HEPA)-filtered vacuum as needed.

The sources stored in the canal were removed in October 1990. All stored components and excess piping in the canal must also be removed. The demineralizer system piping now located in the canal may be used during and after canal repairs but may need to be modified.

Algae is evident in the canal and on the surface of the canal water as a scum. The algae can clog cleanup equipment and hold radioactive particles in suspension; therefore, killing this algae with a biocide is recommended as a precursor to any repair work.

Access and contamination control must be established. This may include step-off pads, postings, temporary walls, and heating, ventilation, and air conditioning (HVAC) controls.

3. AVAILABLE TECHNOLOGY

Several technologies potentially applicable to 3001 Storage Canal closure are described in Sects. 3.1 through 3.15. These technologies were reviewed and screened to eliminate those judged not feasible. Figure 3 presents the basic screening logic.

3.1 CONCRETE SCARIFICATION

Radionuclides are expected to be absorbed into and onto the concrete surfaces of the canal. The isotopes of concern are cesium-137, strontium-90, and cobalt-60. Experience with uncoated concrete and soluble radioactivity indicates that the bulk of the radioactivity is near the exposed surface.

Various techniques for removing surface layers of radiologically-contaminated concrete are available. Ultra-high pressure water, up to 65,000 psi, has been used to remove concrete to depths of up to 1/4 of an inch per pass, underwater. The scarifier uses a rotating tool that contains jewelled orifices through which high pressure water is jetted onto the surface of the concrete. The jets erode and spall the surface concrete. A typical ultra-high pressure water system uses about 10 gal of water for cooling and 2 to 4 gal of ultra-high pressure water per minute. The cooling water can be released to the environment, and up to 4 gal/min of clean water would be added to the canal.

The pump would be staged in a clean area away from the canal and would be connected to the scarification tool with special hoses. The scarification jig can be deployed using a purpose-built unit or could be a modified Quest International, Inc. Cleaner/Scarifier System (Fig. 4).

Other methods used to scarify concrete were evaluated and appeared to be less desirable for the application at the canal than the proven ultra-high pressure water scarification. The proposed technique could remove about 1/4 in. of concrete per pass at a rate of about 2 ft^2/min. Shrouds should be used to confine the scatter of the debris, and the water purification system discussed elsewhere would be used in conjunction with scarifier to clarify the water. A hydrovacuum system would be used to remove the debris from the canal.

3.2 CANAL WATER DEMINERALIZATION

There is an equilibrium concentration of radioactivity in the water of about 3×10^{-5} μCi/mL (based on the estimated leak rate of 400 gal/d and release rate of 50 μCi/d). The water loss to the canal is being replaced, and it is assumed that the make-up contains no radioactivity. In addition, the ion exchange unit recirculates the canal water at about 18 gal/min. If the demineralizer removes 100% of the soluble radioactivity, it has the more significant effect on the radionuclide concentration (26,000 vs. 400 gal of clean water per day). If the radioactivity in the water is from radionuclides leaching from the concrete, any decrease in contamination leakage must come from either a reduction in the leak rate or a reduction in the concentration of radionuclides in the water. A purification demineralizer could be used to achieve the latter. Methods that reduce the radionuclide introduction rates will be addressed in the scarification and fixative sections (Sects. 3.1 and 3.7, respectively).

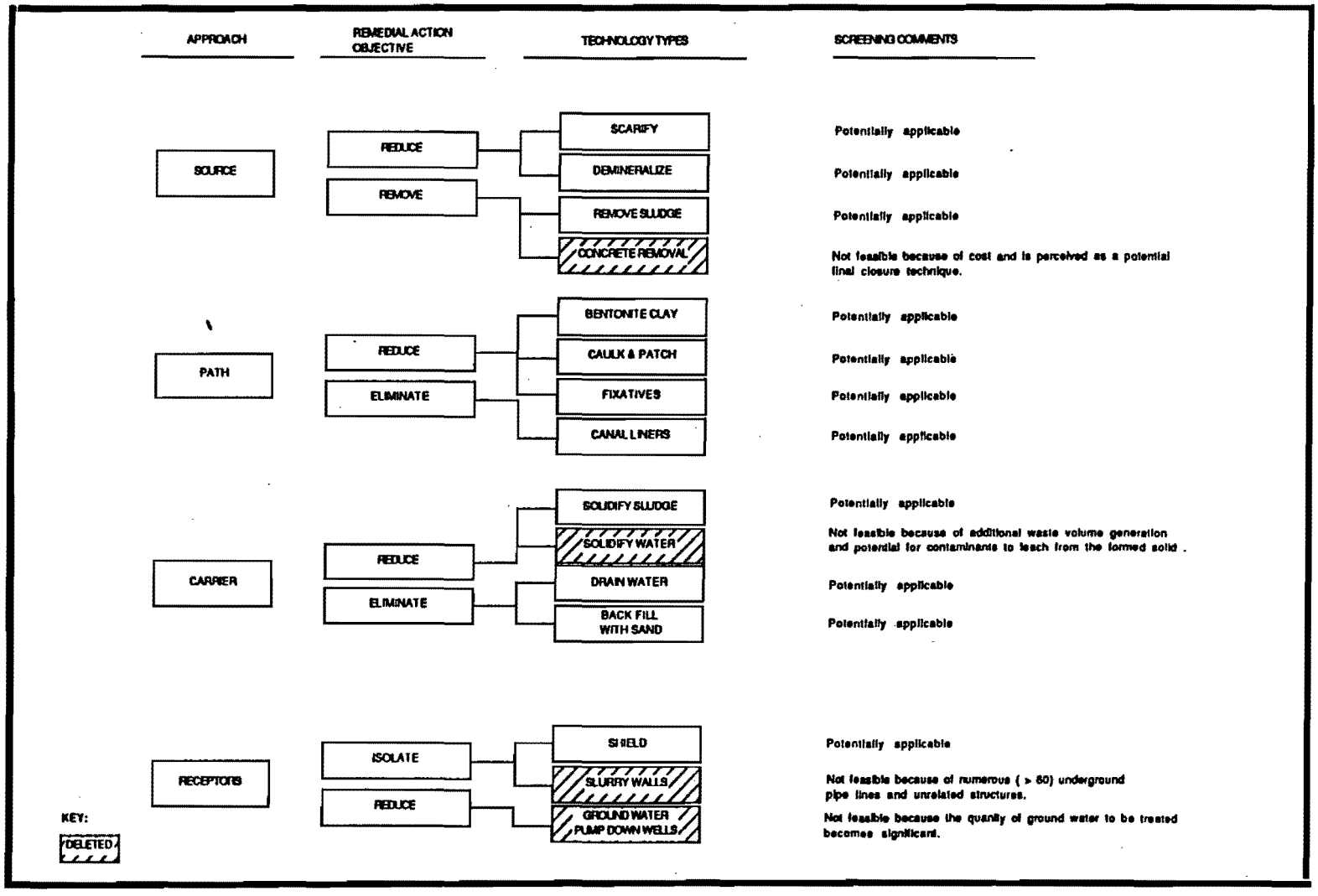

Fig. 3. Technology screening

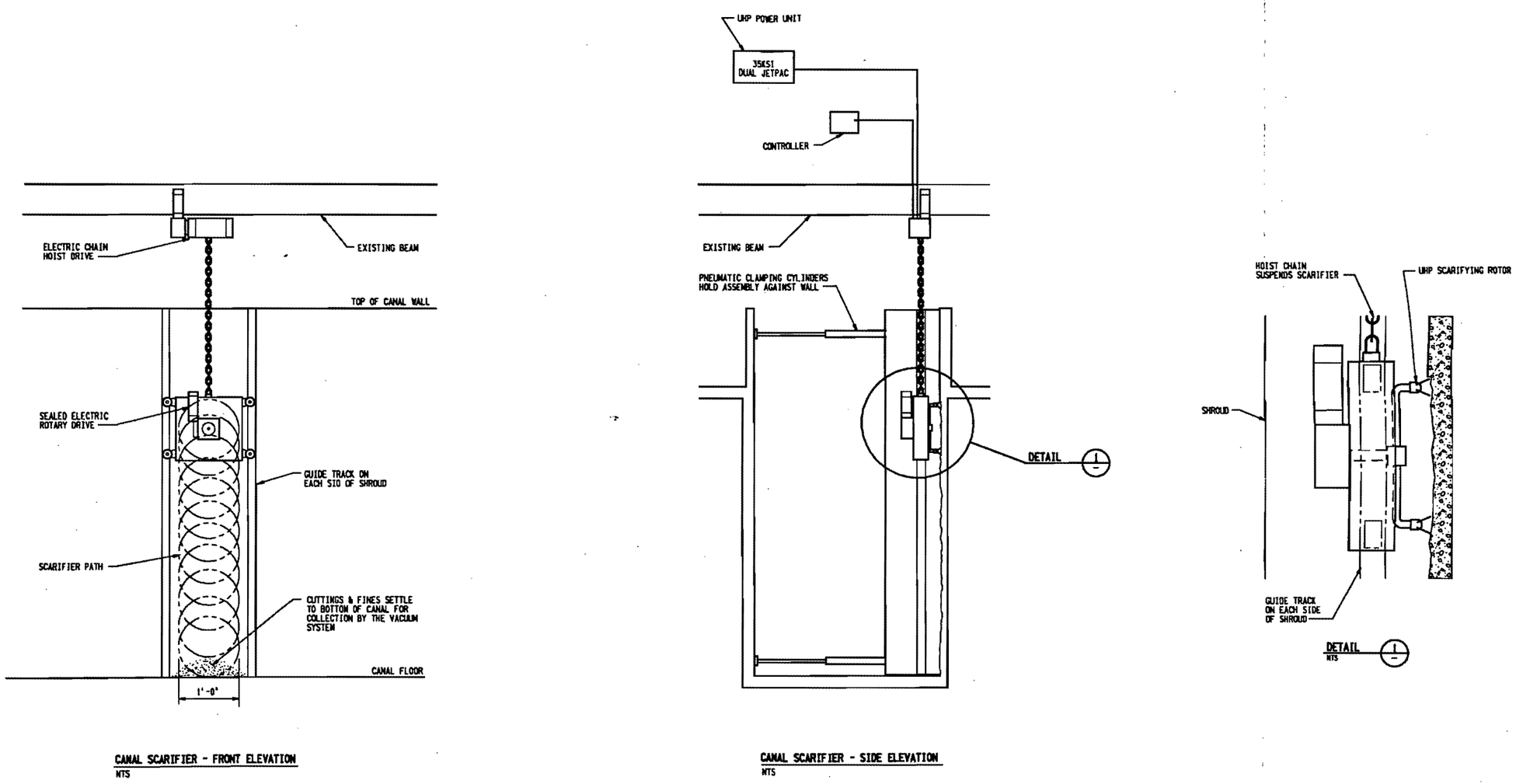

WAG91 91F006.DGN

Fig. 4. Canal scarifier.

Increased demineralization could be accomplished by adding a temporary demineralization system, consisting of a pump, a series of demineralizers, and a valve manifold system. This process maintains the water shielding while reducing the ionic activity in the water. The process of returning the demineralized water to its source is called "feed and bleed."

For the foregoing, the assumption has been made that the radioactivity in the water is ionic. Some of the radioactivity may be insoluble and even colloidal. The radionuclides may also have been incorporated into the microorganisms growing in the canal. Algae is growing in the canal and bacteria and fungi are assumed to be present. The organic matter can be removed by the demineralizers through filtration. This filtration action blinds the demineralizer's ion exchange capabilities and causes the differential pressure across the unit to build up. Sterilization of the water will stop the organic growth. The addition of a flocculating agent will settle the suspended organic matter and metal colloids, if present, where they can be removed as a sediment. Removal of the organic matter will improve the demineralization efficiency for the canal water.

3.3 SEDIMENT REMOVAL

Sediment removal can be accomplished using a hydrovacuum technique. A sediment pick-up head is designed to use water velocity to suspend the sediment. The suspension is then sucked through the vacuum hose to a processing system. It is estimated that a dilution factor of 10 to 20 is required to remove the sediment. A conceptual design of a vacuum system is presented in Fig. 5.

The potential for "hot particles" exists from previous operations of the canal. These "hot particles" are expected to be very dense and could contain significant quantities of radioactivity. The differing physical characteristics of these particles from those of the bulk sediment make it possible to separate these particles from the sediment. The remaining, less contaminated portion of the sediment can be processed by more conventional means. In addition, the separation of "hot particles" reduces the potential for these particles to settle out in an uncontrolled fashion inside piping systems. It is recommended that separation be accomplished using a hydroclone--a device that uses centrifugal and gravitational process to remove sand-like particles. Hydroclone efficiency improves as the density of the particles increase, and hydroclones have no moving parts to wear out. This kind of equipment is also known as a knockout filter.

The effluent of the hydroclone, containing the "light" portion of the sediment, can be treated by:

- directing it to a quiescent section of the canal where the sediment can settle out and concentrate before being pumped to the LLLW system; and
- filtering it using a series of filters to remove the remaining sediment. The water would be returned to the canal and the filters would be backflushed or solidified.

It would be advantageous to transfer the sediment to the ORNL LLLW system if the total volume could be maintained relatively low. To minimize waste volume, the sediment could be concentrated so it could be transferred using a minimal amount of carrier water. The pit section should be isolated from the rest of the canal so it could act as a settling basin. This could be done by constructing a weir or fabric curtain at the pool edge to isolate the canal from the pool

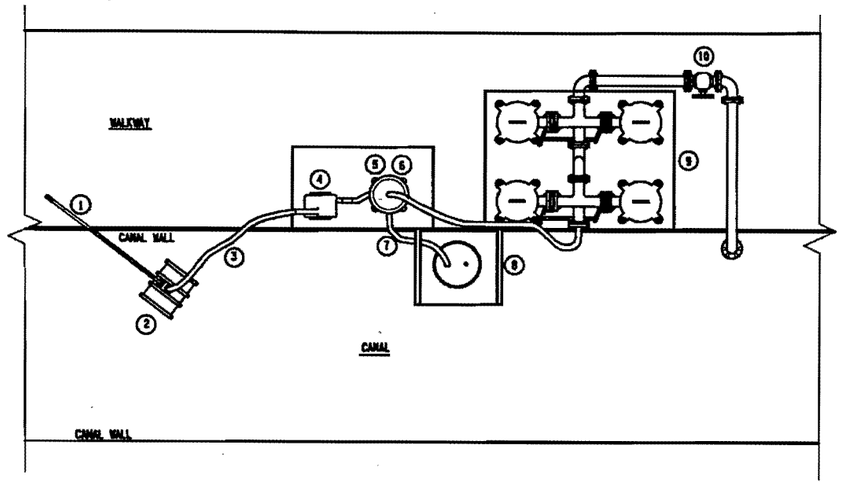

CANAL VACUUM SYSTEM - PLAN
NTS

1. 23' POLE HANDLE.
2. HEAVY DUTY FLEXIBLE VACUUM HEAD.
3. 1-1/2" SMOOTH BORE HOSE.
4. DIAPHRAM PUMP.
5. LAKOS SEPARATOR.
6. SOLIDS COLLECTION CHAMBER.
7. SOLIDS PURGE LINE.
8. SOLIDS COLLECTION DRUM.
9. FILTER UNIT.
10. RETURN TO CANAL (BALL VALVE).

VACUUM SYSTEM COMPONANT LIST
NTS

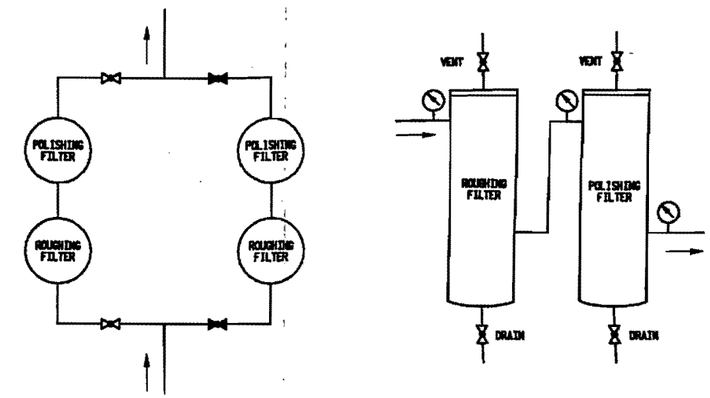

FILTER SYSTEM - FLOW DIAGRAM
NTS

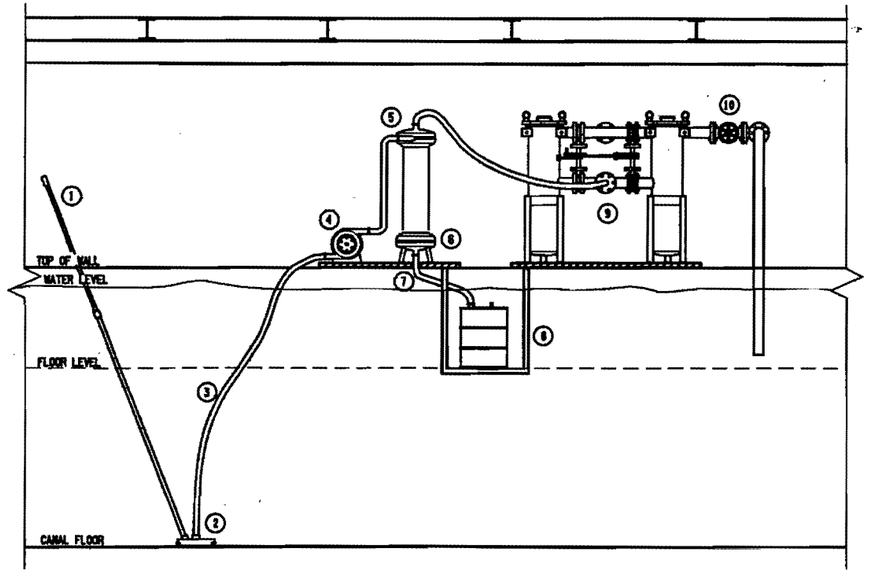

CANAL VACUUM SYSTEM - ELEVATION
NTS

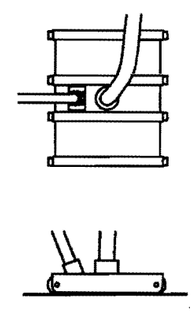

HEAVY DUTY FLEXIBLE VACUUM HEAD
NTS

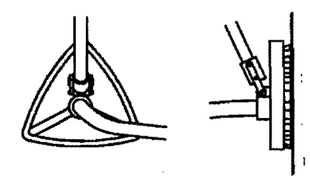

SIDE WALL VACUUM BRUSH HEAD
NTS

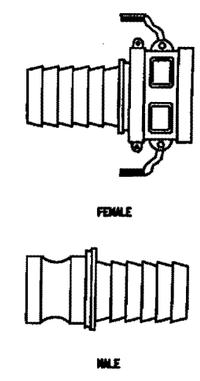

HOSE SHANK ADAPTER
NTS

WAG91 91F004.DGN

Fig. 5. Canal vacuum system.

section. A liner installed in the pit could serve the same purpose. The effluent from the hydroclone would be discharged into a diffuser at about the mid-point of the pit depth. The sediment will be allowed to settle and build up in the deep portion of the pit, and the clarified water will be returned to the canal by flowing over the weir. Flocculating agents and mechanical mixing could aid in the separation of the phases.

Filters are the second effluent treatment option. Two sets of filters would be placed in parallel to allow on-line filter changes. Two filters are recommended per flow path to allow for a two-stage filtration (bulk removal and polishing). The filters may be able to be backflushed to allow discharge to the LLLW system or may have removable media or cartridges for solidification/stabilization.

3.4 CONCRETE REMOVAL

The canal is a concrete structure in a room that is below grade. Portions of the canal share walls with Bldgs. 3001 and 3019. The portion of the canal walls below the canal room floor are 1-1/2 ft thick, while portions above the floor are 9-in. thick. The concrete in the canal was not protected from contamination with liners or coatings.

Removal of the concrete structure eliminates a major source of contamination. Various dismantling methods could be employed; however, the recommended method is wall sawing. This is considered the method of choice for removing the canal in large pieces, to preserve the remaining structures, and for waste minimization. A diamond wheel is used to abrasively cut a kerf through the concrete. The blade is driven by a hydraulic motor that can cut through reinforcement steel and concrete. This operation will require the canal water to be partially or completely drained, and shielding will be required to reduce the dose rate to the work force.

A competing technology is diamond wire sawing. With this technique, a hydraulic diamond wire saw would be used to cut the concrete into about 2-ton blocks. The wire would be strung through holes drilled into the concrete.

To lift the blocks from the canal, holes would be drilled into the blocks to set anchors. The blocks would be rigged from the canal, wrapped in plastic or painted to contain residual radioactivity, and then removed from the room. Radioactive waste volume would be reduced by cutting off the portions that exceed disposal criteria and by decontaminating the remaining portion.

The excavation would be shored to prevent cave-ins. The surrounding earth would be sampled and portions that exceeded release criteria would be excavated and disposed as radioactive waste. The resulting hole would be backfilled for structural stability and safety considerations. A liner could be left in place as a marker to identify the interface of the fill and existing ground.

This technique has several drawbacks. Although the drawings indicate the canal wall is 1-1/2 ft thick below the floor, the wall could be significantly thicker because of instructions to "fill as needed" on the construction drawings. Also, the radiological characteristics of the fill behind the canal wall are not known and large quantities may have to be removed to meet release criteria. This technology is appropriate only for final closure and will not be considered further.

3.5 BENTONITE CLAY SEAL

Construction joints exist along the canal bottom and canal walls. During construction, the joints were sealed by placing an oakum seal and an expansion joint compound into the formed recesses at the bottom of the canal walls. After 40 years, this seal is suspect. Also, a water stop consisting of copper sheets was used at the wall construction joints. This folded copper sheet was embedded in the concrete between the wall sections. The copper could have been attacked by the canal water or by groundwater, again making the seal suspect.

Most of the joints are along the bottom of the canal and could be sealed with a clay layer. The hydraulic gradient caused by the water in the canal would act as a surcharge, forcing the clay into leaking joints. Bentonite clay is recommended because of its swell/shrink characteristics and ion exchange capabilities. A 2-in. bentonite clay layer could be placed in the canal by placing clay pellets into the canal water. The pellets quickly fall to the bottom where they will absorb water, swell, and form a continuous clay layer.

Bentonite clay could be dispersed into the water to reduce leaks through wall joints. The clay would be carried by the water through the leak path where it would coat the surfaces, buildup, and eventually form a seal. The excess clay would settle along the bottom of the canal where it would impede water flow into, or out of, the canal. The automatic make-up rate would be monitored; and when the leak rate stabilizes, the clay addition would be considered complete.

3.6 CAULK/PATCH LEAKY JOINTS

Methods for patching leaking joints with no water in the canal must consider the radiological conditions. After drain-down, partial source removal and/or special shielding would be needed to caulk or patch leaking joints. In-leakage could then be identified, remediated (caulked or patched), and tested.

Methods for patching or caulking under water consider the placement of a grout or silicone seal in the bottom of the canal and pit. Core drilling vertical holes down the vertical construction joints behind water stops and then filling the cored hole with expansive grouts is also considered feasible. After placement of the seals, the make-up rate to the canal would be observed to determine the effectiveness.

3.7 FIXATIVES

Fixatives are coatings that will prevent the migration of the contaminants (heavy metals and radionuclides) and that can be applied to the prepared concrete surfaces. These fixatives are available as paints or grouts and may be applied wet or dry.

If a fixative were to be applied dry, the potential spread of the contamination must be addressed during preparation and application phases. In addition, radiation levels may require shielding or remote application methods.

Most fixatives require the surface to be dry for application. Only one fixative, an epoxy coating, was identified that could be applied underwater. The product was designed to seal leaking underground concrete tanks. This fixative cures underwater and is stable when exposed

to oxidizing agents such as H_2O_2. This fixative would be preferred for this application if testing shows that it performs as advertised.

3.8 CANAL LINER

Synthetic liners can be installed in the canal to contain the canal water. Water would be prevented from escaping the canal while it shields the radioactivity contained in the concrete. The synthetic liners can be made of Hypalon, polyvinylchloride (PVC), or other suitable material. The liners may be fabricated with a fabric scrim in order to give the liner greater tear strength.

Installation of the liners could be accomplished as follows:

- Float the liner(s) into position.
- Pump the canal water (demineralized during this step) from the canal into the liner(s).
- Continue pumping until the liner(s) displace the canal water and settle into position.
- Attach the liners to the inner surfaces of the canal walls above the water line.

It is estimated that at least five separate liners would be required to line the entire canal. The five liners would be placed as follows:

- The deep portion of the canal pit
- The edge of pit to water gate
- The water gate to the beginning of the 5-ft, 6-in. wide section
- The 5-ft, 6-in. wide section to Bldg. 3019 wall
- The 23-ft section in 3019 hot cell

A double liner system could be constructed by floating a second liner into the first. The contents of the first liner could be transferred to the second liner that would be filled and placed as the initial one. The double liner system could be used to test for and control leakage. A conceptual liner plan is presented in Fig. 6.

3.9 SOLIDIFY SEDIMENT

This method would be applied to a sediment that has been stripped of any "hot-particles" and consolidated. The consolidation could be performed within a liner in the deep end of the pit or by collecting the sediment on filters and backflushing to drums.

The concentrated sediment would be removed and placed in drums to be solidified. The product waste will be inspected to make sure solidification has been accomplished to produce a free-standing, non-friable product. The drums could be stored in the canal temporarily or shipped to a waste disposal facility if shown to be non-mixed waste.

3.10 SOLIDIFY WATER

Consideration was given to solidifying the water in place as a method for eliminating the canal leakage. Methods that could be employed to solidify the 62,000 gal of water are chemical and physical binders. Chemical binders react with the water and bind it into the resulting compound,

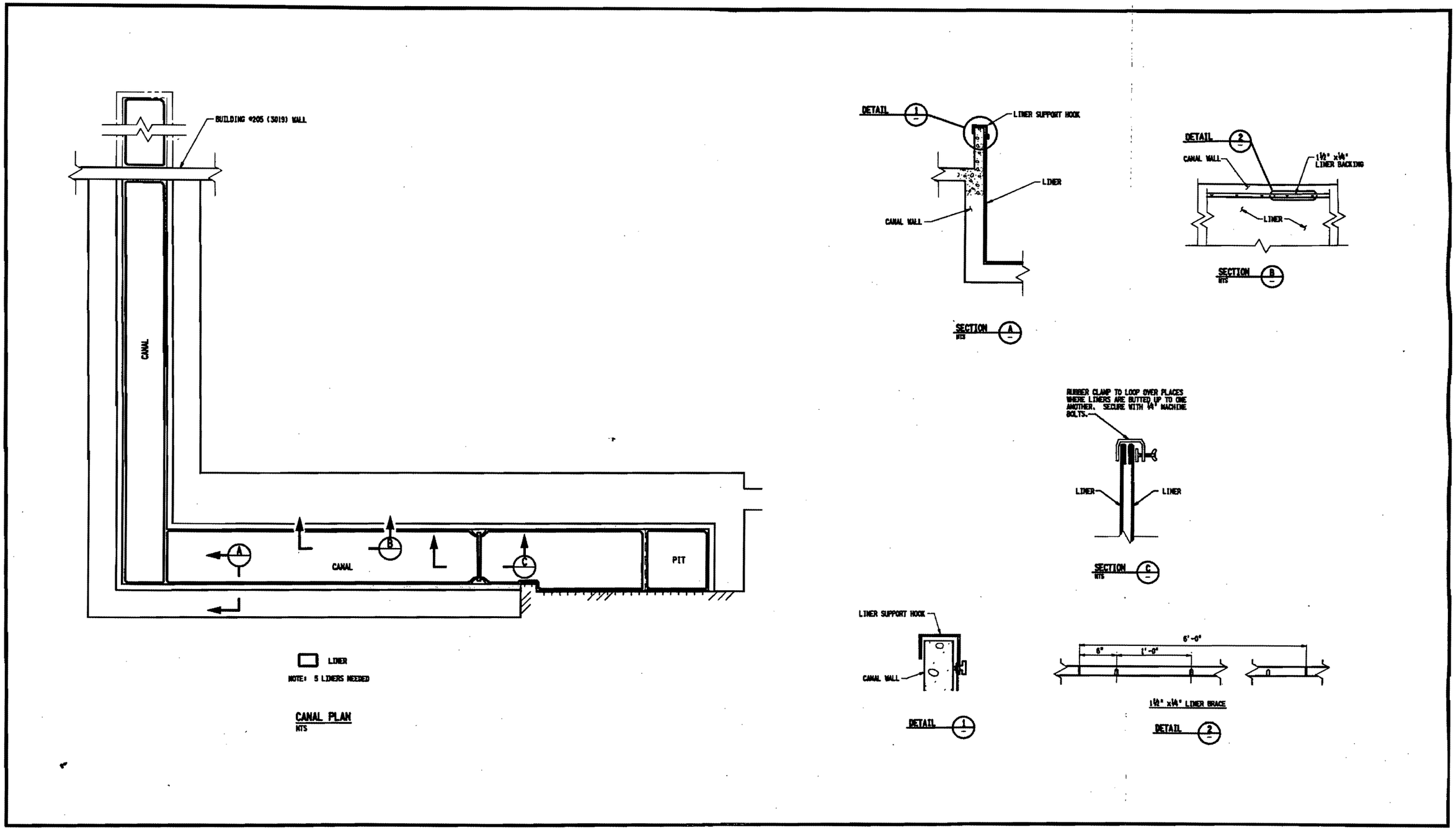

WAG91 91F005.DGN

Fig. 6. Canal liner plan, sections and details.

such as the hydration process when Portland cement is mixed with water. Physical binders incorporate the water in closed cell sponges, as with the DOW binders and with the urea formaldehyde.

An example is physical binding. The binder will increase the volume of waste in the canal, so the canal water would be drawn down so the final volume is at, or slightly greater than, the existing level in the canal. The liquid binder would be added and mixed to the proper concentration, and the Ph would be adjusted to cause the binder to form closed cells. Once set, the compound would act as a solid and would provide radiation shielding as the water does now.

The advantage is that the leak would be eliminated without construction of shielding and application of fixatives. The disadvantages are that some of the water would have to be processed by the ORNL LLLW system, the final volume of waste is significantly increased, shrinkage and crack development can cause radiation streaming and paths for groundwater intrusion. Finally, solidifying 60,000 gal of water would have severe negative impacts on final closure activities. These disadvantages eliminated this technology for further consideration.

3.11 CANAL WATER REMOVAL

The canal water could be removed from the canal and treated as follows:

- pumped, as-is, to the ORNL LLLW system using existing piping,
- processed by the existing ion-exchanger and the effluent pumped to the ORNL LLLW system; and
- processed by the existing ion-exchanger units and placed into a local hold tank which would be sampled and analyzed. The sampled water would be discharged if it meets release criteria, or if it does not meet release criteria, it would be reprocessed.

Based on project meetings, the water could be processed with the existing ORNL LLLW system. This system is currently used to near capacity requiring that the water be fed to the LLLW system during below capacity operating periods. Assuming scheduling could be arranged and the water meets LLLW system criteria, this would be the least complicated drain-down route. ORNL personnel have indicated that the LLLW system treatment cost is approximately $6/gal, making drain-down to LLLW expensive in the short term.

If the water does not meet LLLW system requirements, processing the canal water with the existing ion-exchange unit is possible. Processing the water from drain-down would take approximately eight, 8-h days using the existing system. This would not impact the final handling of the ion-exchange units, since they require regeneration or disposal in any case.

Processing the canal water for discharge to the environment could present permitting problems. Regulators may view this as a new point source discharge and require a National Pollutant Discharge Elimination System (NPDES) permit. This plan is not recommended.

Removal of the water will stop the diffusion of radionuclides from the concrete back into the water. It will expose the concrete to the environment of the canal room which will present an airborne radiological control problem and will remove the shielding that the water provides. For any dry canal plan, controls for contamination and radiation would be required.

3.12 BACKFILL CANAL

If the water in the canal were removed to control the migration of radionuclides and heavy metals, a means to control spread of these contaminants from the exposed walls and radiation shielding would be needed. Sand could be used as backfill shielding material. A liner or barrier would be inserted in the canal to minimize contamination of the sand. The sand backfill would provide the necessary shielding and prevent an inadvertent entry into the canal.

The sand can be placed dry or wet. If placed dry, mechanical conveyors would be used to deliver and dispense the sand into the canal. If placed wet, the liners must be equipped with an drain to remove the slurry water after, or as the sand is placed. The wet placement would be done into the existing canal water after lining and demineralization. The water would be pumped out as it is displaced by the sand. The sand would probably eventually become contaminated, complicating final closure.

3.13 SHIELDING

In the past, the radiation levels from the absorbed radioactivity in and on the canal walls required additional shielding. The canal water level was raised 1 ft and was found to provide adequate shielding. Any removal of the canal water will expose the interior walls and floor of the canal, requiring extensive shielding if the source is not removed. Without additional information on the radioactive source geometry and the principle gamma-emitting isotopes (cobalt-60 and cesium-137), selecting the proper amount of shielding is difficult.

For conceptual purposes, a 9-in. thick reinforced concrete shield will be considered.The shielding could be designed so that the segments can be placed down the stairway and transferred to the existing "I" beam from where they can be rigged into place. The segments would be designed to minimize radiation streaming and to span the canal width (Fig. 7). A metal stand would rest on the canal bottom and support the shielding where there is no supporting ledge. Optionally, brackets could be mounted on the wall to support the shielding.

3.14 SLURRY WALL AROUND CANAL

An underground impervious barrier that meets the limestone bedrock and extends upward to a height above the groundwater table could be installed around the canal. This barrier would isolate the canal from the environment and would force groundwater to flow around this zone. The ground surface in and near the canal is mostly paved and would generally prevent water infiltration. Wells placed within the barrier then could be used to depress the water table beneath the bottom of the canal.

The barrier can be made using a slurry wall construction technique. In this technique, a narrow excavation that encircles the entire canal would be dug to the bedrock. The walls of the excavation would be stabilized by filling the excavation with a water and a bentonite clay suspension. The hydraulic gradient would force the suspension into the walls of the excavation. The bentonite clay would build, seal, and support the walls of the excavation. The material removed from the excavation would be mixed with native clays and bentonite clays to make the blend more impervious than the excavated material. This blended mixture would be placed into the excavation and would form the slurry wall.

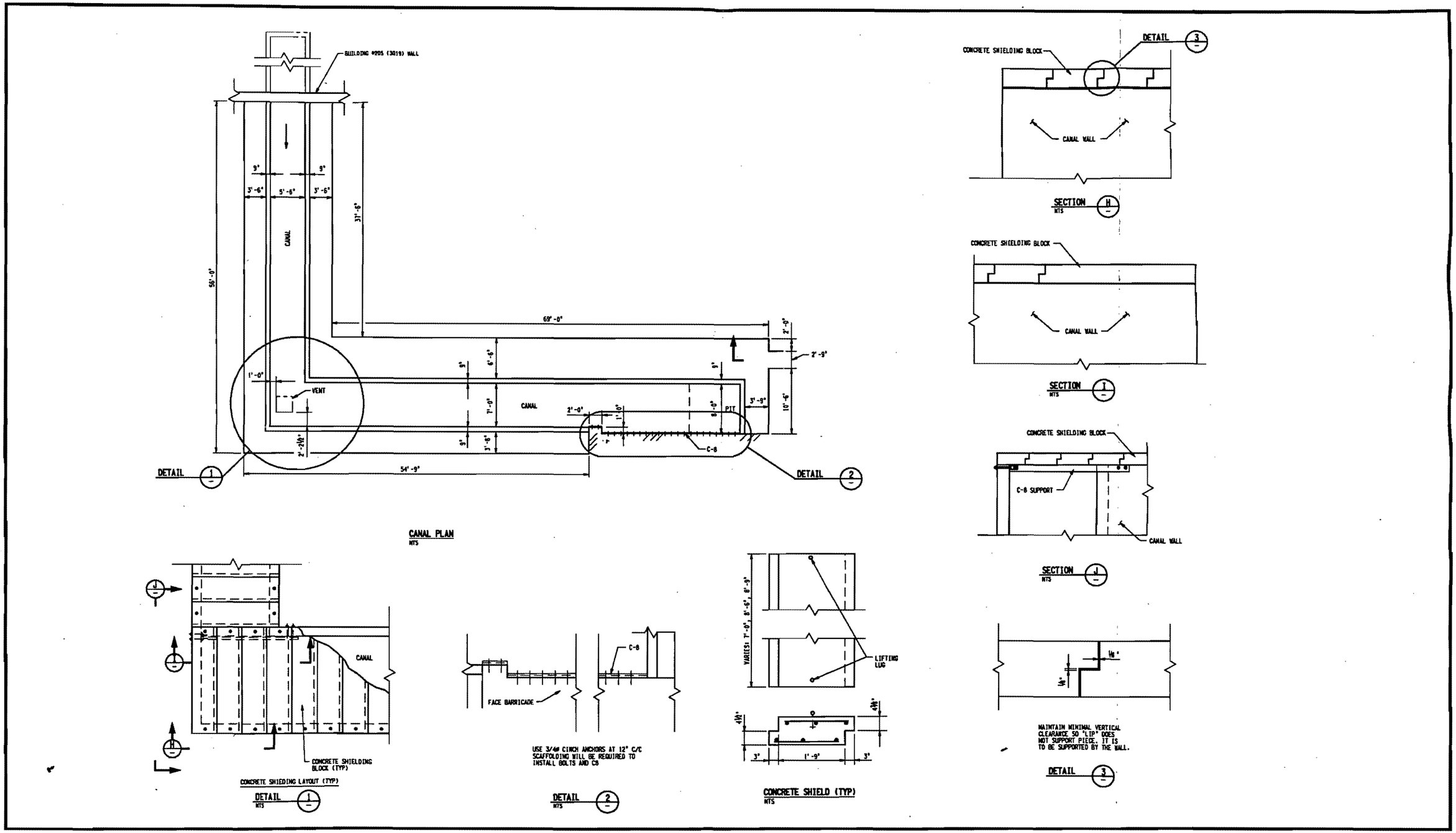

WAG91 91F008.DGN

Fig. 7. Canal shielding plan and details.

Slurry wall technology is considered infeasible for this application because of the physical restrictions on construction. The wall would have to extend around Bldgs. 3001 and 3019 and would cross a minimum of 60 underground pipes. Therefore, this technology will not be considered further.

3.15 PUMP-DOWN WELLS

Wells could be designed and placed in the vicinity of the canal that would suppress the local water table to below the bottom of the canal. This would prevent groundwater from entering into the canal if maintaining the canal in a dry state was desirable.

The wells would be controlled by instruments that would automatically maintain the water level below the canal. The number of wells needed and their design and placement would be a function of local geohydraulic features.

Pump-down wells as a remediation technology are not appropriate for this application because of the large amount of water processing that would be required for their use. This technology will, therefore, not be considered further.

4. INTERIM CLOSURE PLANS

The following sections describe the projected interim closure plans. The plans present combinations of the potentially applicable technologies described in Sect. 3. The descriptions include significant advantages and disadvantages that were considered in evaluating the plans. In general, the listed advantages and disadvantages correspond to positive and negative factors in the evaluation in Sect. 5.

4.1 SOURCE CONTROL

In situ source control involves removing the sediment and increasing the demineralizer capacity while leaving the water in place (Sects. 3.3 and 3.2). The objective is to reduce the contaminant concentration in the water to a level that is below allowable release criteria with the current leak rate. Removing the sediment removes the major source of heavy metal contamination and most radioactive particulates, especially cobalt-60 and "hot particles." Increasing the ion exchange capacity will remove more ionic radionuclides, particularly cesium-137 and strontium-90, and will further reduce the equilibrium radioactivity in the water. This plan requires that the contamination content of the water be maintained below regulatory release limits throughout the canal.

Advantages:

- This would be the least expensive plan in the short term.
- This plan involves minimal installation of new components and substances in the canal.
- This plan has a low radiation exposure to workers and requires minimal rigging and handling.

Disadvantages:

- This plan allows the leak rate of 400 gal/d to continue, although with "clean" water.
- This plan leaves--in place and exposed to the water--the contamination source embedded in the concrete.

4.2 SOURCE REDUCTION

Source reduction involves sediment removal, scarification of the concrete surfaces of the canal, and continued demineralization of the canal water (Sects. 3.3 and 3.1, respectively). Removal of the sediment will remove the major source of heavy metal and hot particle contamination. Removal of the surface layer of concrete (scarification) will sharply reduce a major source of soluble radionuclide contamination. This plan probably would not require an increase in ion exchange capability and would significantly reduce radiation dose rates for future work.

Advantage:

- This plan removes the majority of sources, thereby simplifying final closure and increasing long-term stability.

Disadvantages:

- Underwater scarification of the concrete is a complex and expensive project.
- This plan allows the leak rate of 400 gal/d to continue, although with "clean" water.

4.3 LEAK-RATE REDUCTION

Leak-rate reduction consists of sediment removal with the addition of the bentonite clay seal and coating techniques to reduce the leak rate (Sects. 3.3, 3.7, and 3.5, respectively).

This plan seeks to reduce the contaminant concentration in the water by sediment removal, and coating the surfaces where the radionuclide source is exposed to water. In addition, bentonite clay will be suspended in the water (after sediment removal, but before ion exchange operations are begun) to seal leak paths. By reducing both the contaminant concentration and leak rate, the reduction in total contaminants released to the environment is more assured than without the bentonite seal.

Advantages:

- Installation of the clay liner is a relatively simple procedure.
- Cost and schedule impacts are minimal.
- Little radiation exposure nor heavy rigging is required.

Disadvantages:

- This plan leaves in place the significant contamination source embedded in the concrete.
- This plan is not intended to completely stop the leak, only reduce its rate and impact.

4.4 LEAK RATE AND SOURCE REDUCTION

This plan reduces the leak rate with bentonite clay after removal of the major sources (Sects. 3.5, 3.1, and 3.3, respectively). Sediment removal reduces the major source of heavy metals and hot particles while scarification of the concrete removes the major source of soluble radionuclides. The bentonite clay liner and suspension then would be used to reduce the leak rate. An increase in ion exchange capacity would not be required with this plan.

Advantage:

- This plan removes the majority of sources, thereby simplifying final closure and increasing long-term stability.

Disadvantages:

- Underwater scarification of the concrete is a somewhat complex and expensive project.
- This plan slows but does not completely stop the leak.

4.5 LINE CANAL

This plan involves sediment removal to reduce the contaminant level, and installation of a liner to mitigate the leak (Sects. 3.3 and 3.8, respectively). Reduction of the contaminant concentration in the water by the existing demineralizer is augmented by installation of liners.

The liners will stop the leak as long as they remain intact. Sediment removal will remove most of the source term exposed to groundwater flow outside of the liners, and continuing ion exchange will clean the water in the liners so that any leaks can be dealt with on a non-emergency basis. The existing demineralizer would not need to be replaced under this plan as the water would be separated from the soluble contamination in the concrete. An under-drain pumping system under the liners may be required to control groundwater inflow.

Advantages:

- Installation of the liners in sections is not expected to be difficult and, because the water is still in place, will result in little radiation exposure.
- Liners are inexpensive and can be emplaced quickly--approximately 1/d.

Disadvantages:

- This option leaves the contamination embedded in the concrete exposed to possible groundwater intrusion below the water table.

4.6 LINER AND CLAY

This plan involves sediment removal, installation of bentonite clay, and installation of a liner (Sects. 3.3, 3.5, and 3.8, respectively). Under this plan, the bentonite clay seal technique would be used after sediment removal to seal the leak paths. The liners would then be installed. This reduces the risk of groundwater flow between the liner and canal wall and provides a form of double containment for the canal water. The existing demineralizer would maintain the contained water clean.

Advantages:

- This plan provides a form of double barrier between the canal water and groundwater.
- Clay installation and liner installation are expected to be relatively easy procedures.
- The materials for this plan are inexpensive, and the schedule for installation is expected to be short compared to drain-down.
- The clay protects the liner from tearing on the canal wall joints.

Disadvantages:

- This option leaves the contamination embedded in the concrete exposed to possible groundwater intrusion below the water table.

4.7 DRAIN AND STABILIZE

This plan consists of sediment removal, draining the water from the canal, stabilizing the remaining contaminants with fixatives, and shielding the canal (Sects. 3.3, 3.11, 3.7, and 3.13, respectively). Sediment removal is required because, in a dry state, the sediment represents an unacceptable source of airborne contamination. Draining the water removes the carrier that transports the contamination to the environment. Fixatives such as epoxy paint will control airborne release of contaminants from the concrete and will provide an extra layer of protection if water collects in the canal again. A pumping system may be required to remove groundwater in-leakage. Shielding will be required, most likely spanning the top of the canal, to control exposure rates in occupied areas of Bldg. 3001 above the canal. Under this plan, any contaminant flow would be into the canal rather than into the environment.

Advantages:

- This plan removes the canal water, thereby providing positive verification that the leak is stopped.
- This activity will be required for final closure.

Disadvantages:

- Preparations for drain-down including shielding and stabilization of loose contaminants are relatively large tasks.
- Shielding and other engineering safeguards required for a drained canal will increase the cost and schedule requirements.
- The radiological and industrial safety concerns of this plan must be addressed in the engineering phase.
- The loss of water shielding may be a negative impact on preparations for final closure.

4.8 REDUCE SOURCE AND DRAIN

This plan consists of sediment removal, scarification of concrete, draining canals, and shielding (Sects. 3.3, 3.1, 3.11, and 3.13, respectively). Sediment removal followed by scarification of the concrete walls would remove the majority of contaminants. The canal would then be drained and shielded. This plan may also employ fixatives, though their application and function would not be as critical as they would be if the concrete was not scarified. The shielding for this plan would be less than the shielding required for the plan in Sect. 4.7. Groundwater in-leakage would be controlled by patching leaking joints.

Advantages:

- This plan removes the canal water, providing positive verification that the leak is corrected.

- This plan removes the majority of sources, simplifying final closure and increasing long-term stability.
- This plan requires less shielding than the plan in Sect. 4.7.

Disadvantages:

- Preparations for drain-down including scarification, shielding, and stabilization of loose contaminants are large tasks.
- Specification, shielding, and other engineering safeguards required for a drained canal will increase cost and schedule requirements.
- The radiological and industrial safety concerns of this plan must be addressed in the engineering phase.

4.9 DRAIN AND SAND SHIELD

This plan consists of sediment removal followed by filling the canal with sand and draining the water (Sects. 3.3, 3.12, and 3.11, respectively). Under this plan, the canal water would be replaced with sand for shielding. After sediment removal, a thin contamination control liner would be installed in the canal. The canal water would be pumped through the demineralizer into the liner. The liner would then be filled with sand, displacing the water. The sand provides shielding and more long-term stability than water. The integrity of the liner cannot be guaranteed and the sand may eventually become contaminated. A pumping system may be required to control groundwater inflow.

Advantages:

- This plan removes the canal water, providing positive verification that the leak has stopped.
- Sand shielding provides long-term stability and prevents airborne contamination from escaping the dry concrete surfaces.

Disadvantages:

- Handling of large quantities of fill (sand) inside this radiologically-controlled area is complicated.
- The sand may become a very large quantity of radioactive waste that must be handled for final closure.

4.10 PATCH AND SHIELD

This plan consists of sediment removal followed by scarification, drain-down, and caulking or patching the leaking construction joints (Sects. 3.3, 3.1, 3.11, and 3.6, respectively). The objective of this plan is to patch all of the construction joints in the canal and then provide radiation shielding. This requires sediment removal and concrete scarification before canal drain-down to keep radiation levels low enough to allow work in the canal. The canal would be drained, and caulk or grout would be applied to all construction joints. The canal would then be either refilled with water or shielded, and would be available for storage.

Advantages:

- If the canal is left dry, the leak is positively controlled.
- Removal of the sources (sediment and concrete surface) is an advantage for final closure.

Disadvantages:

- Effective and proper application of the patching material is difficult and time-consuming.
- The requirements for scarification, drain-down, and application of the patching increase cost and schedule requirements.
- The radiological and industrial safety concerns of this plan must be addressed in the engineering phase.

4.11 PATCH UNDERWATER

This plan consists of sediment removal followed by caulking or patching of the construction joints underwater (Sects. 3.3 and 3.6, respectively). Applying caulk or grout to the construction joints underwater reduces the effort required for worker radiological protection in a dry caulking operation. Sediment removal is required for access to the joints, but scarification would not be necessary. The grout or caulk would be applied by remote or long-handled tools. Materials and application techniques for this plan must be further investigated.

Advantages:

- Minimizes radiation exposure to workers.
- If applied successfully, the grout/caulk would stop the leak.

Disadvantage:

- Development of techniques and materials for successful patching under water may be required.

4.12 SOLIDIFY SEDIMENT IN SITU

This plan consists of sediment solidification followed by enhanced demineralization (Sects. 3.9 and 3.2, respectively). The objective of this plan is to stabilize the sediment in the canal. The sediment would be collected in the deep pit and solidified. This would also benefit from enhanced demineralization of the canal water. Agents to perform solidification underwater must be further researched, and all solidification processes are sensitive to the composition of the sediment involved (which is not well known in this case because of limited sampling and the nonhomogeneous nature of the sediment).

Advantage:

- The sediment will be in a stable form that can be stored until mixed-waste disposal is feasible.

Disadvantages:

- The leak is not stopped.
- Proper solidification of the sediment underwater will be difficult.
- The long-term stability of the sediment in this configuration is questionable.
- Solidifying the sediment in place may complicate final closure.

4.13 CLAY AND GROUT SEALS

This plan consists of sediment removal followed by caulking or patching underwater and sealing any remaining leaks with bentonite clay (Sects. 3.3, 3.6, and 3.5, respectively). This combines the bentonite clay bottom seal with grout seals for the canal wall joints. The sediment would be removed, and a minimum of 2 in. of clay above the wall-floor joint would be placed on the bottom of the canal. Holes would then be drilled vertically down through the wall joints. These holes would be filled with grout, making a new seal in place of the copper sheets that are currently in place. This would provide a more positive seal for the walls than the clay-only techniques and would not require special tooling and engineering to place grout underwater or in a dry canal.

Advantage:

- This provides a more positive seal for the walls than simply suspending bentonite in the water.

Disadvantage:

- A large part of the source of contamination will remain in place, and the leak may not be completely stopped.

5. EVALUATION OF INTERIM REPAIR PLANS

The interim repair plans from Sect. 4. were evaluated in the following five categories:

- Short-term effectiveness
- Implementability
- Cost and schedule
- Safety
- Final closure impact

Sections 5.1 through 5.5 define the criteria for each evaluation category. A preliminary evaluation of the interim repair plans was performed using a scale of "better than average" (+), "average" (0), and "worse than average" (-). The results of the evaluation are presented in Sect. 5.6.

5.1 SHORT-TERM EFFECTIVENESS

The objective of this category is to evaluate a plan's ability to do the following:

- Prevent the release of sediment and suspended matter
- Prevent the release of liquid
- Reduce contaminants (heavy metals and radionuclides)
- Minimize generation of wastes
- Meet community acceptance
- Minimize environmental impacts from construction and/or implementation
- Concentrate the contaminants to aid handling and subsequent treatment
- Minimize institutional controls (monitoring, management, and maintenance)

5.2 IMPLEMENTABILITY

This evaluation encompasses both the technical and administrative feasibility of an interim closure plan. The administrative items considered are:

- ability to obtain necessary approvals from regulating agencies;
- compliance with ORNL policies and applicable or relevant and appropriate requirements (ARARs);
- availability of treatment, storage, and disposal services and capacities (ORNL LLLW system);
- availability of equipment and skilled workers; and
- coordination with ORNL departments.

The technical items considered include:

- Constructability
- Operability
- Reliability
- Monitoring requirements

- Uncertainties [Further investigations are required to establish defined requirements such as depth of concrete contamination (affects scarification equipment/techniques), sediment properties (affects removal equipment/techniques), etc.]

5.3 COST AND SCHEDULE

The cost elements considered for the interim repair plan evaluations are:

- Direct capital (construction materials, equipment, and labor)
- Indirect capital (engineering, contingency)
- Operation and maintenance (demineralization system operation, monitoring, etc.)
- Waste disposal

The focus of cost screening was based on comparative estimates based on generic unit cost, vendor information, quantity take-offs, and good sound engineering judgement.

The only schedule item considered for this evaluation was field construction durations. The shortest duration was assumed to be best.

5.4 SAFETY

The following items were considered for this evaluation:

- Worker safety (radiological and construction safety)
- Environment safety (emissions during construction activities)
- Impact on building occupant safety (radiological ingress/ egress, noise, and fugitive emissions)

5.5 FINAL CLOSURE IMPACT

This category identifies any plan that will have detrimental effects on final closure activities. The items considered are:

- affect on additional characterization to support final closure;
- affect on other ORNL remediation sites/activities; and
- impact on final closure (increased waste, impact on final closure schedules, and safety)

5.6 PRELIMINARY EVALUATION

The interim closure plans were evaluated using a plus (+) "better than average," zero (0) "average," and minus (-) "worse than average" system. Results of the preliminary evaluation are presented in Table 1. The four plans with the highest scores were chosen for further cost and schedule analysis in Sect. 5.7. The "dry" method with the highest score (4.8 Reduce Source and Drain) was also chosen for analysis in Sect. 5.7.

Figure 8 presents a summary of the evaluation results broken down into the basic approaches each plan represents. It demonstrates that, of the alternatives selected for further evaluation, one addresses source control, one addresses carrier control, and three address pathway control. Figure 9 presents a summary of major activities required for the five selected plans. This logic

Table 1. ORNL 3001 Canal interim repair plan evaluation

INTERIM REPAIR PLANS	CATEGORY					
	S.T. EFFECTIVENESS	IMPLEMENTABILITY	COST/SCHEDULE	SAFETY	FINAL CLOSURE IMPACT	TOTAL
4.1 SOURCE CONTROL	–	+	+	+	0	+2
4.2 SOURCE REDUCTION	0	0	0	0	+	+1
4.3 LEAK RATE REDUCTION	–	+	+	+	0	+2
4.4 LEAK RATE & SOURCE RED.	0	0	0	0	+	+1
4.5 LINE CANAL	0	+	+	0	0	+2
4.6 LINER AND CLAY	+	+	+	0	0	+3
4.7 DRAIN & STABILIZE	+	–	–	–	–	-3
4.8 REDUCE SOURCE & DRAIN	+	–	–	–	+	-1
4.9 DRAIN & SAND SHIELD	0	–	0	0	–	-2
4.10 PATCH & SHIELD	0	–	–	–	+	-2
4.11 PATCH UNDERWATER	0	0	0	0	0	0
4.12 SOLIDIFY SEDIMENT	–	–	0	0	–	-3
4.13 CLAY & GROUT SEALS	0	0	0	0	0	0

5.6 3088.2

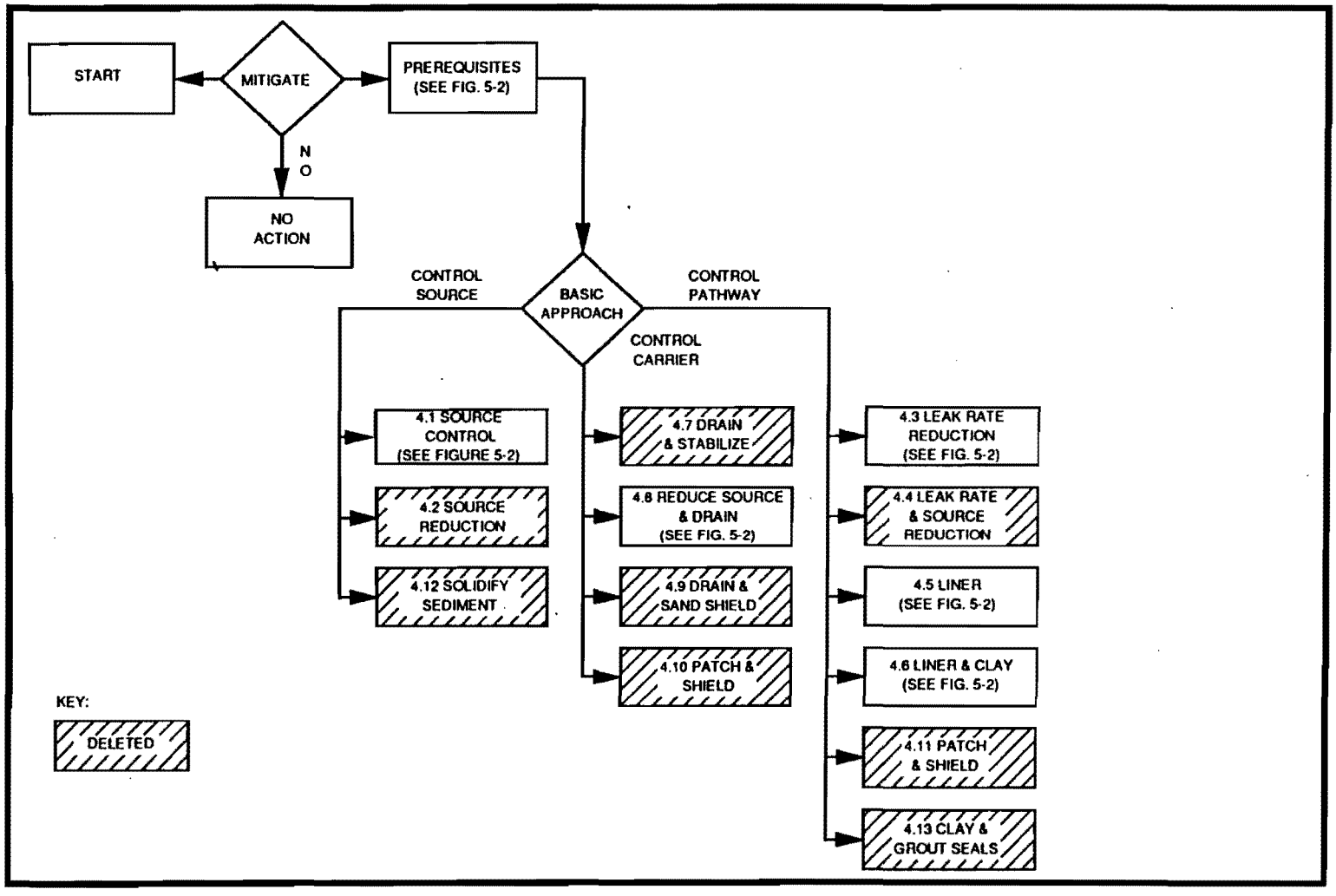

Fig 8. Interim plan screening summary.

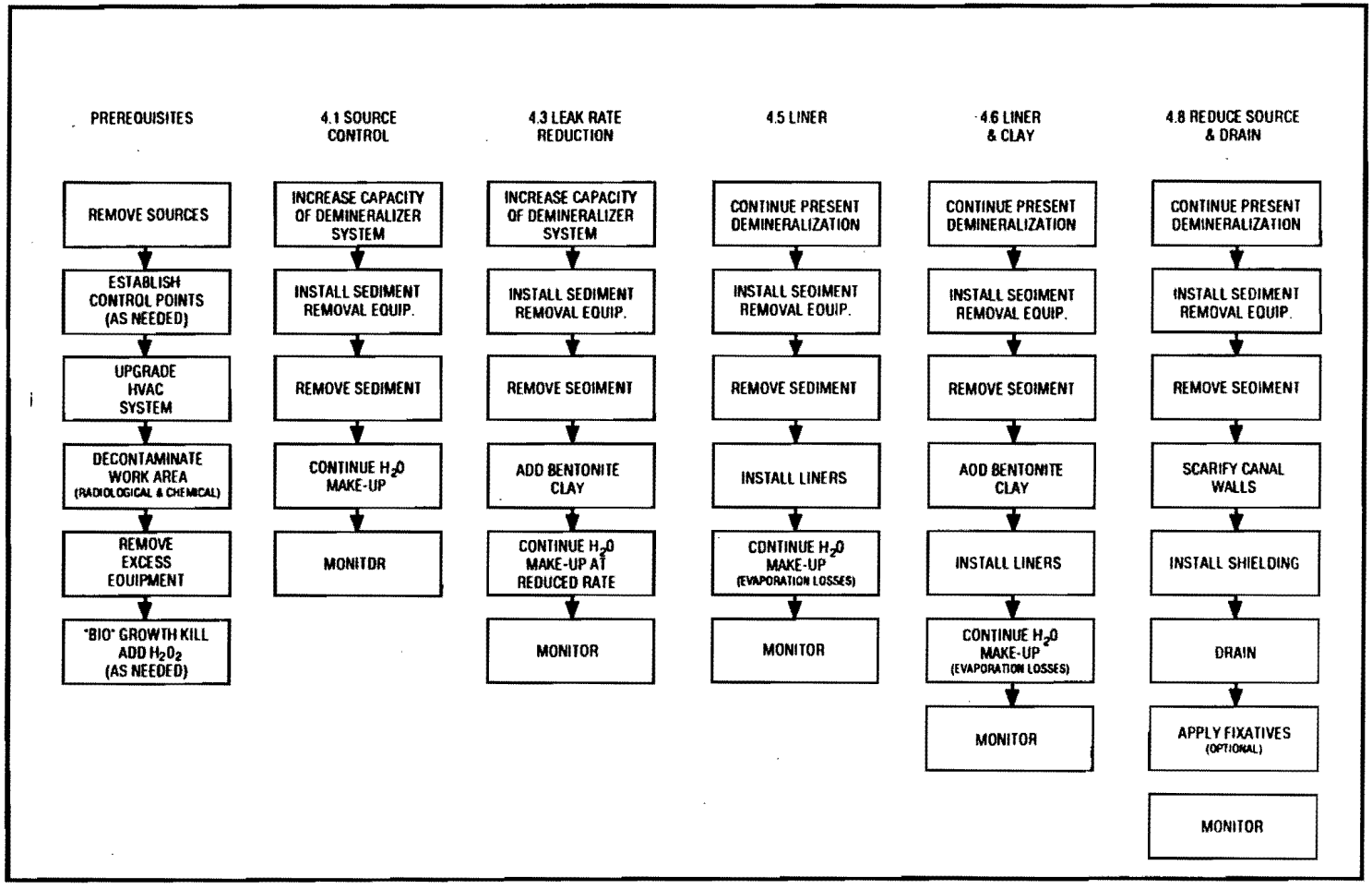

Fig. 9. Interim closure plan logic.

was used for schedule and cost analysis. Activities common to all plans are listed as prerequisites. Conceptual sketches of the five plans, as well as the current condition, are presented in Fig. 10.

5.7 COST AND SCHEDULE EVALUATION

It is assumed that Title I and II engineering will be performed between July and November 1990, and site work will begin on November 1, 1990. Preliminary schedules for site work for the five plans are presented in Figs. 11 through 15. These schedules do not include Title I or II engineering or waste disposal activities.

An order-of-magnitude cost evaluation of each of the five plans was developed based on these schedules and some limited vendor cost information. Table 2 presents a summary of the cost evaluation. The cost estimates include an allowance for engineering as well as 1 year of maintenance costs. They do not include waste disposal costs.

The preliminary durations and costs for site work for the five plans are summarized as follows:

Plan	Name	Duration (Months)	Cost (in millions)
4.1	Source Control	4.5	$0.97
4.3	Leak Rate Reduction	5.0	$1.15
4.5	Line Canal	5.0	$1.06
4.6	Liner and Clay	6.0	$1.12
4.8	Reduce Source and Drain	7.0	$1.55*

* Does not include cost of water treatment/disposal.

These costs and durations are to be considered preliminary, for planning purposes only. The costing is accurate to ±20 percent for the schedules presented.

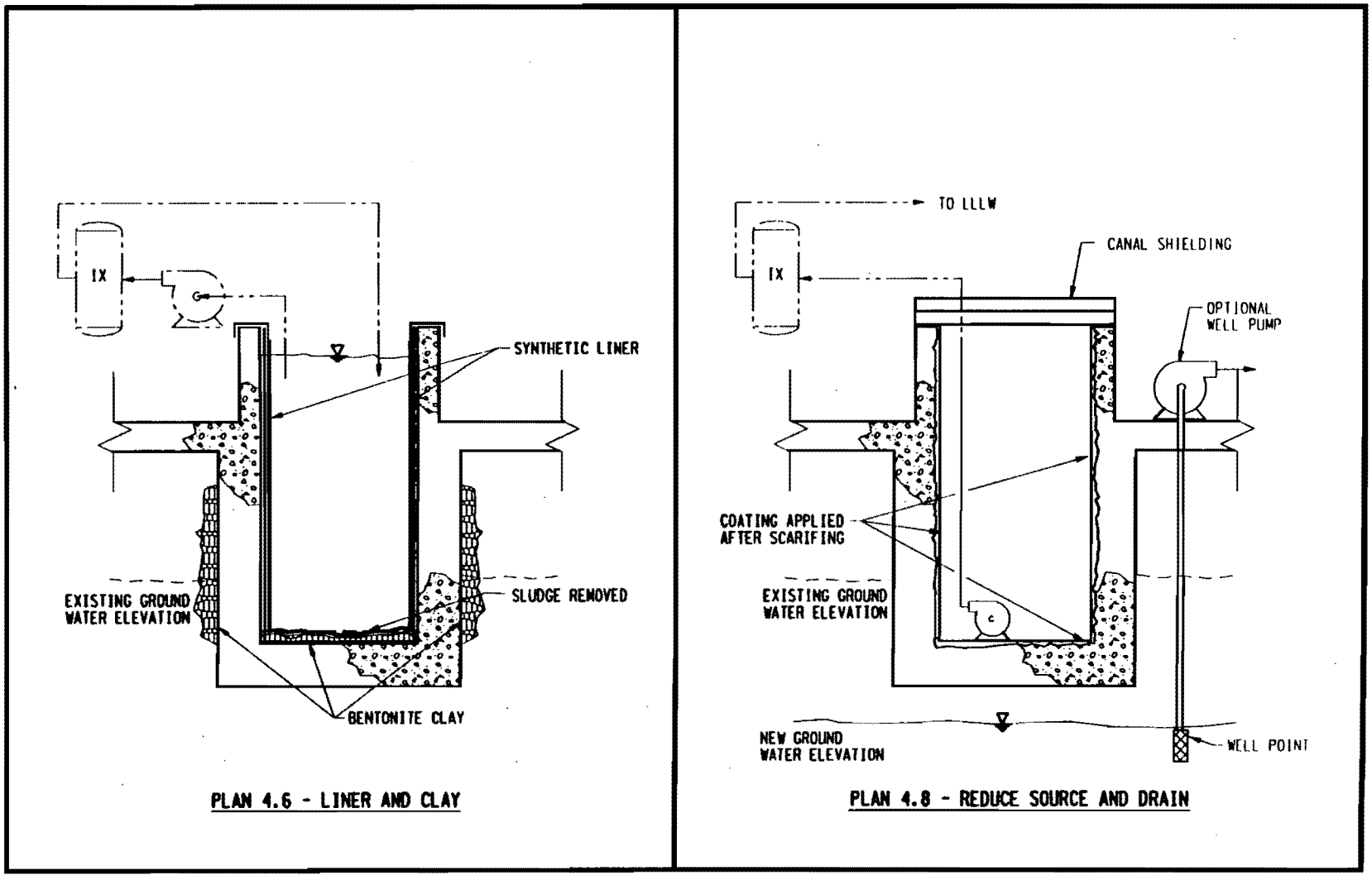

Fig. 10. Canal remediation plans.

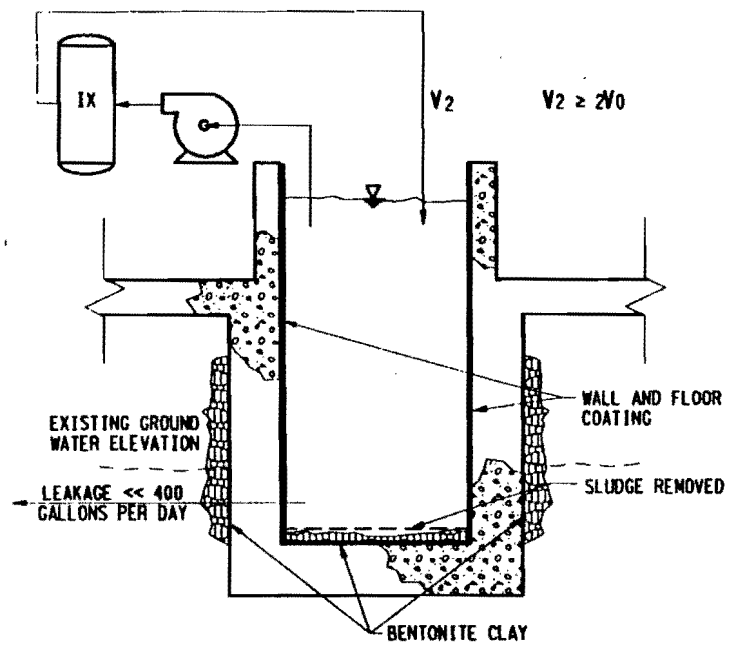

PLAN 4.3 - LEAK RATE REDUCTION

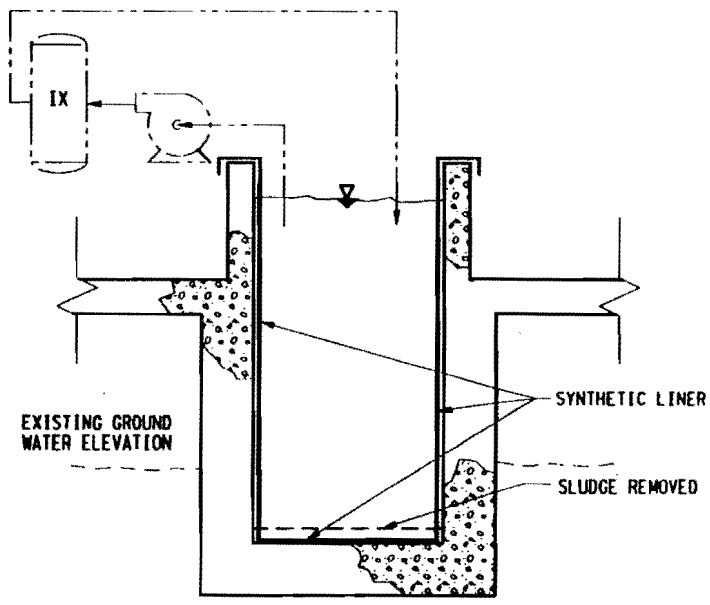

PLAN 4.5 - LINE CANAL

Fig 10. (continued).

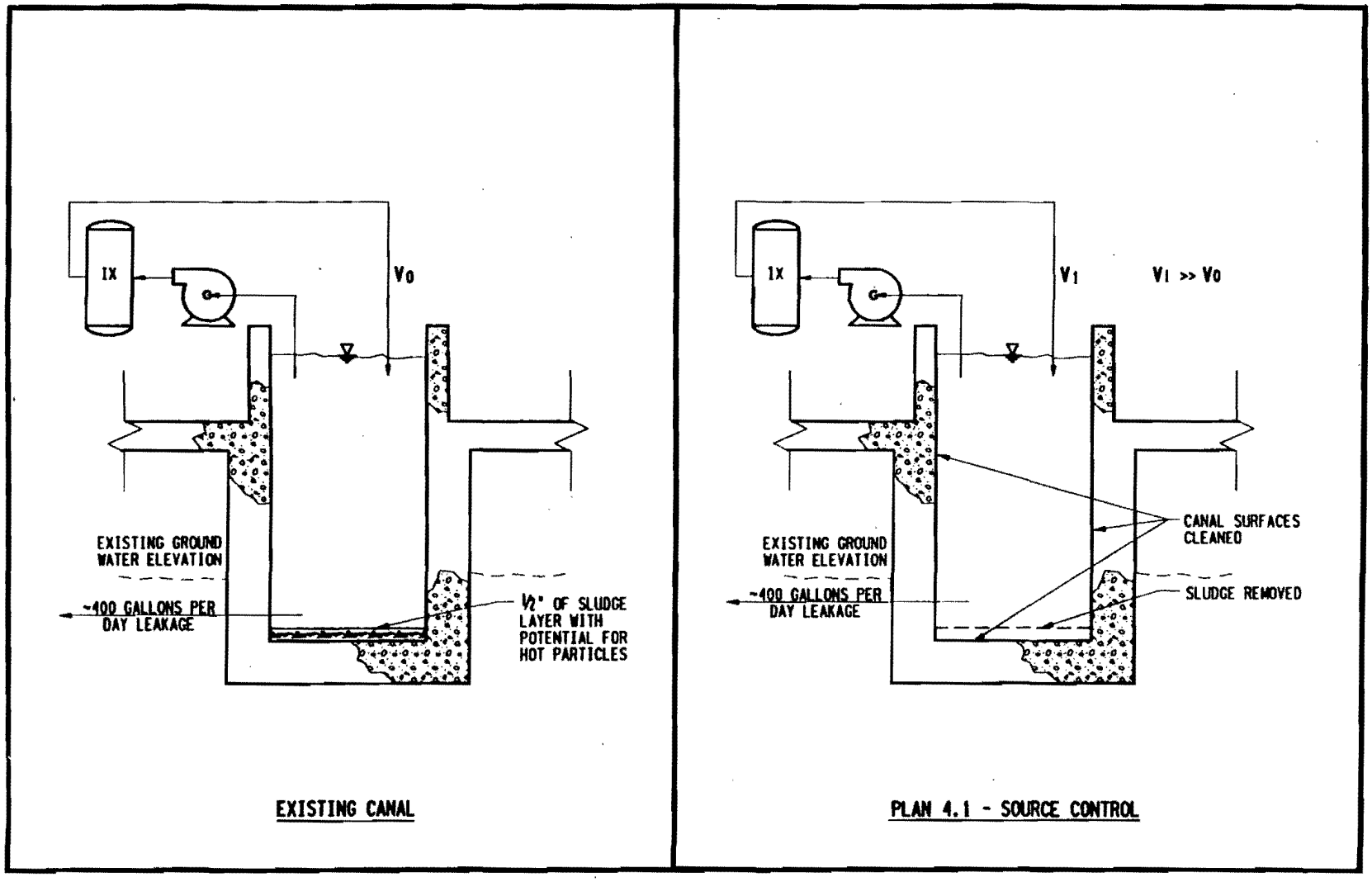

Fig 10. (continued).

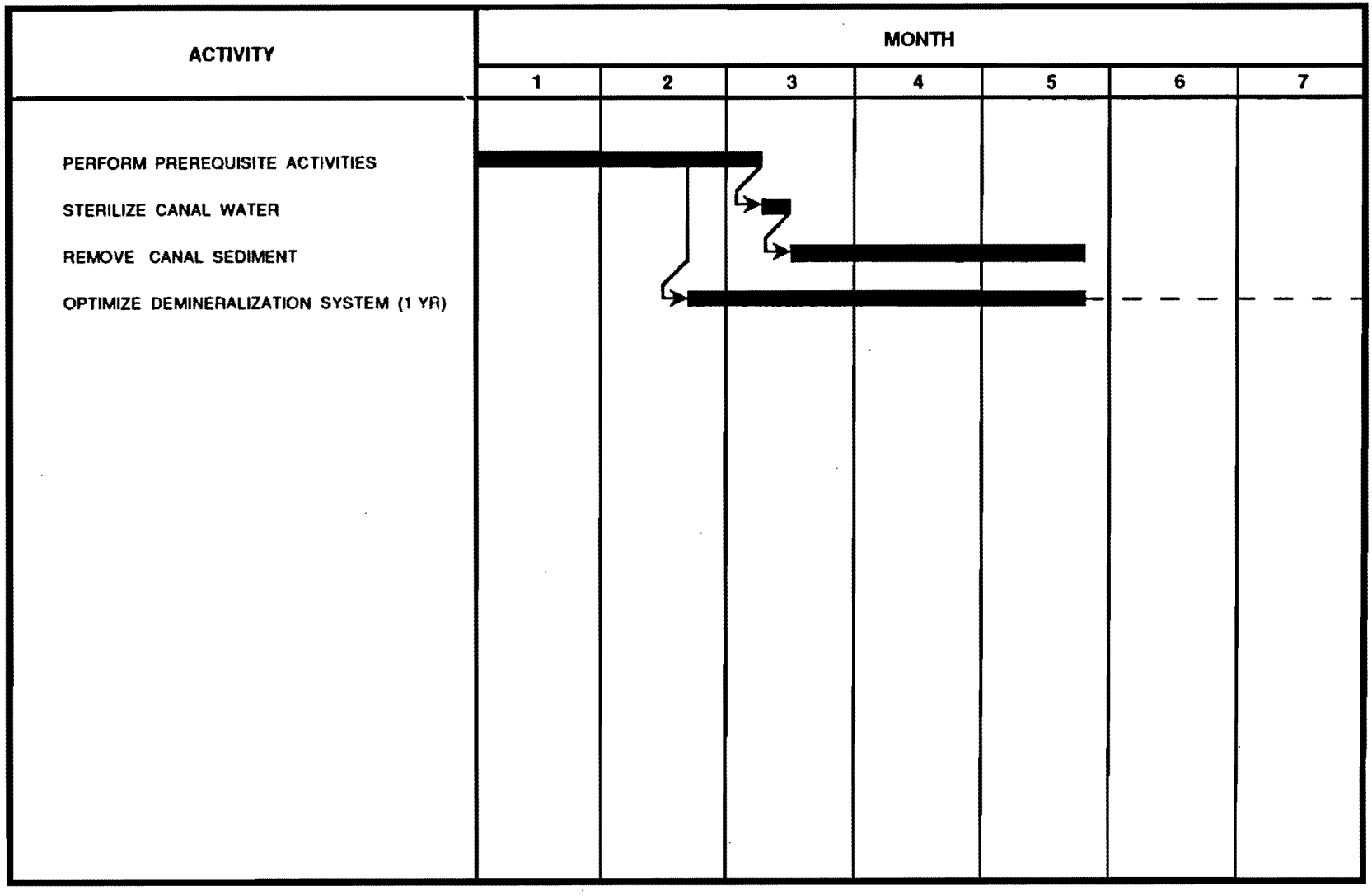

Fig. 11. Plan 4.1 "Source control" schedule.

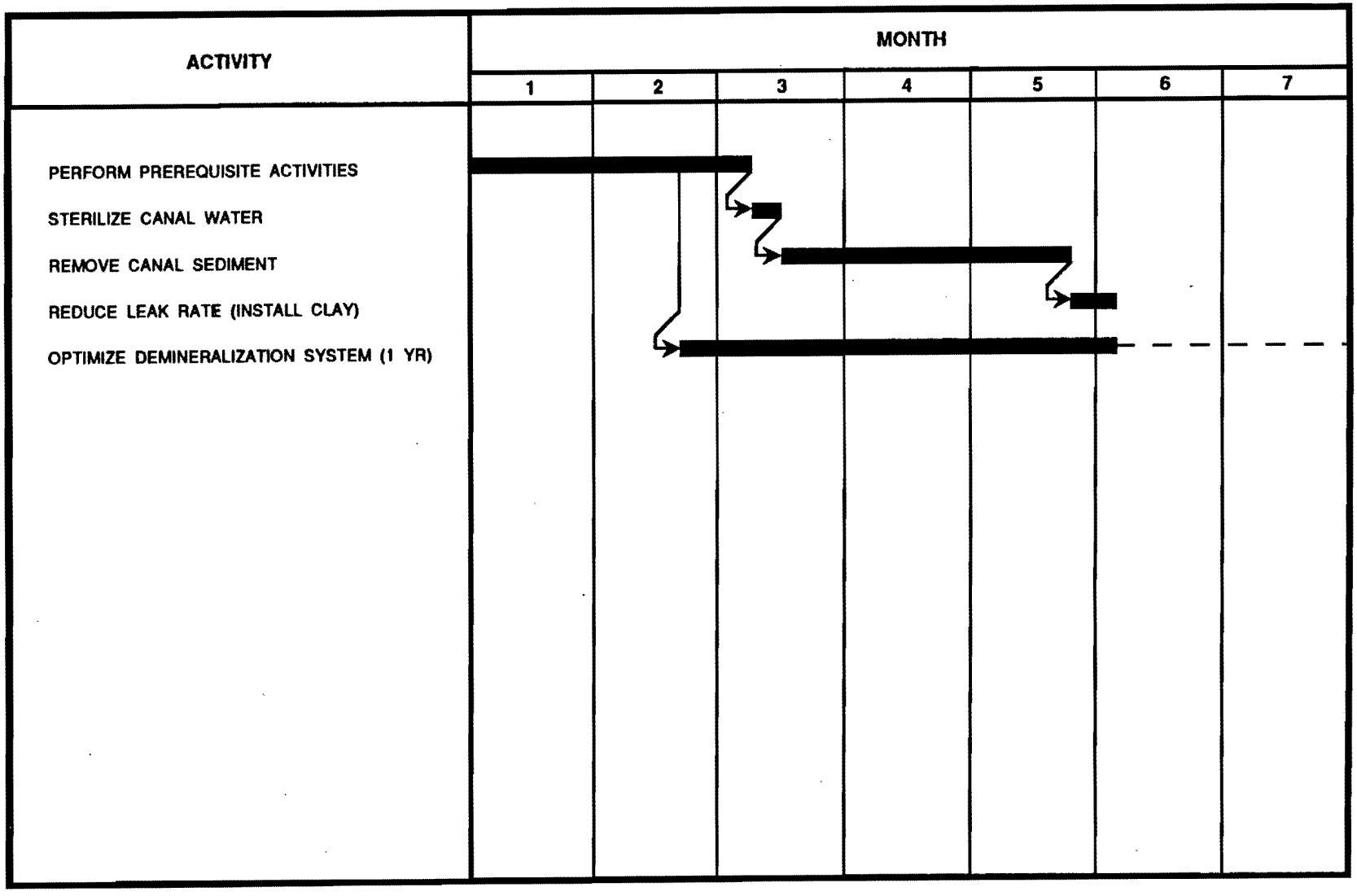

Fig. 12. Plan 4.3 "Leak rate reduction" schedule.

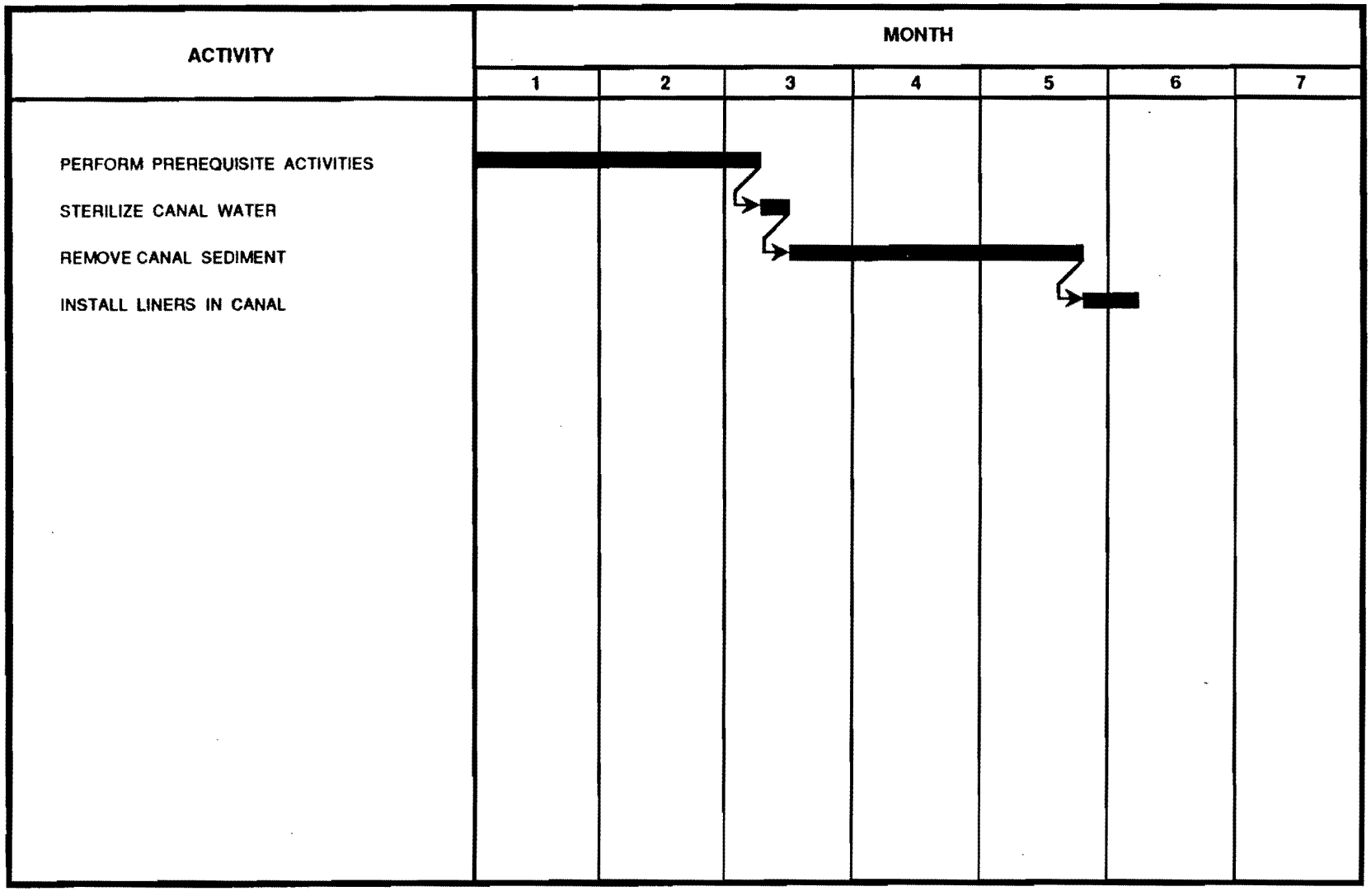

Fig. 13. Plan 4.5 "Line canal" schedule.

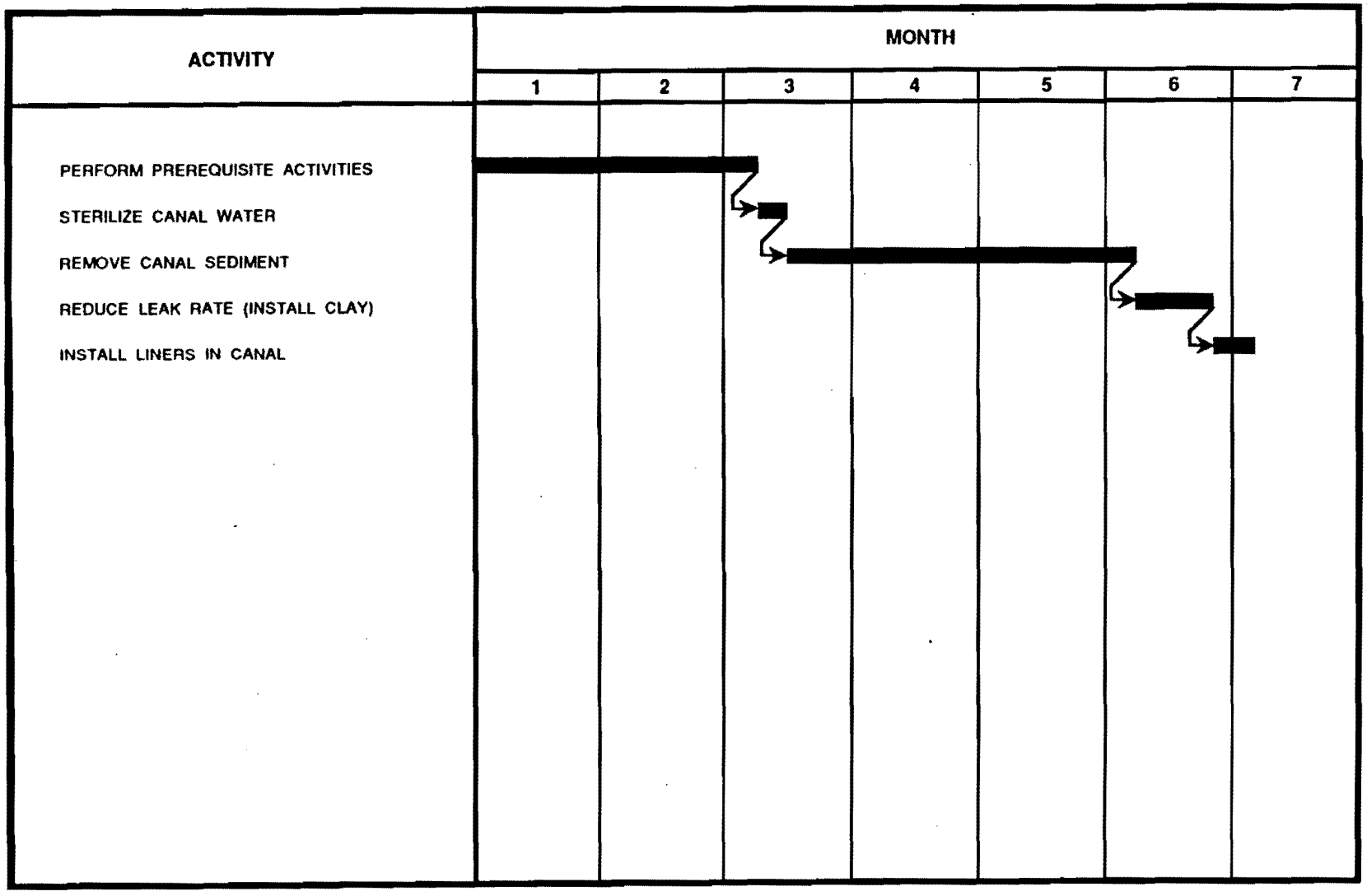

Fig. 14. Plan 4.6 "Liner and clay" schedule.

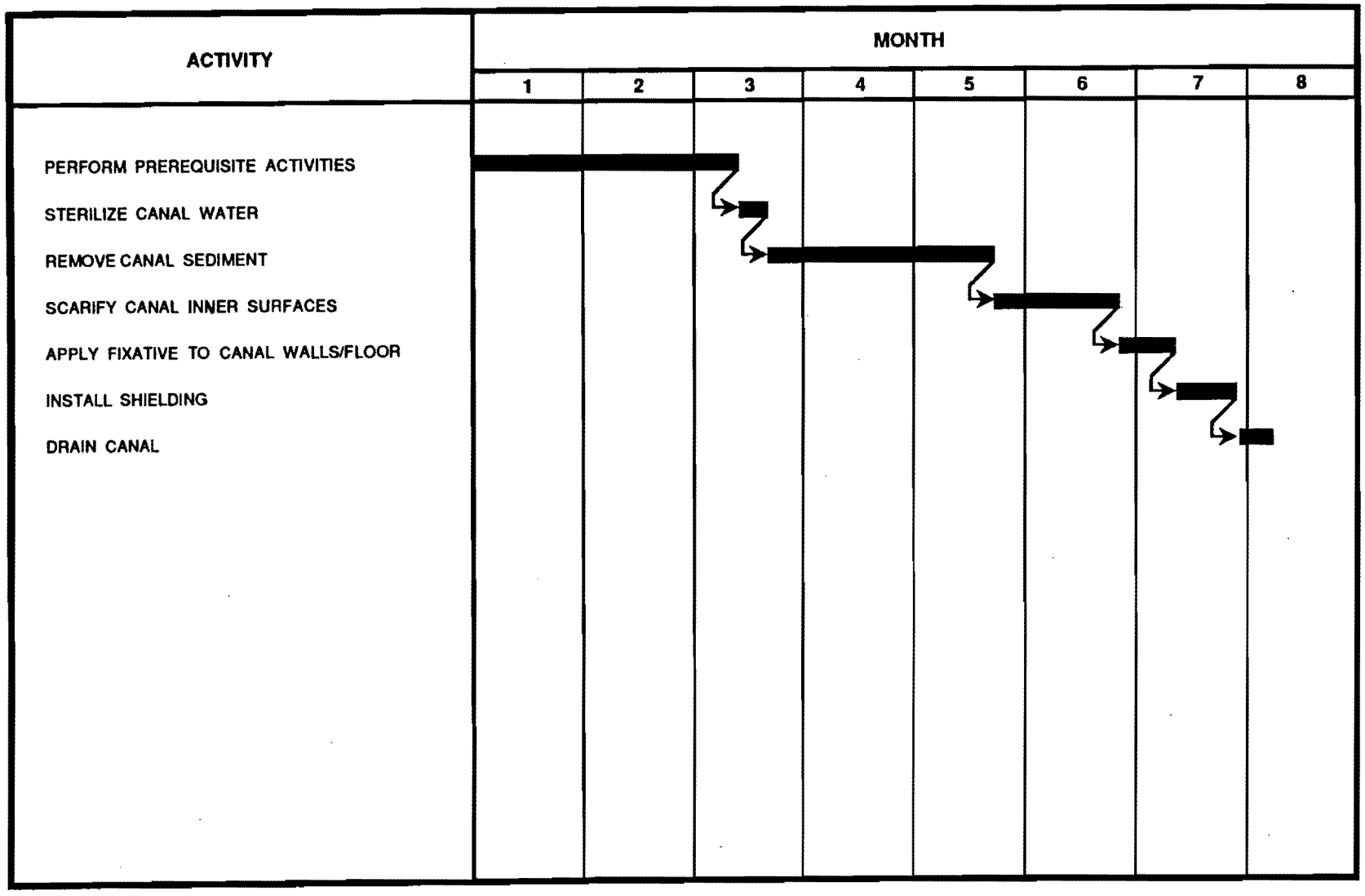

Fig. 15. Plan 4.8 "Reduce source and drain" schedule.

Table 2. Cost evaluation

ACTIVITY NUMBER	ACTIVITY DESCRIPTION	ALTERNATIVE PLAN COST ($)				
		4.1	4.3	4.5	4.6	4.8
1.0	Perform Prerequisite Activities	144,500	144,500	144,500	144,500	144,500
2.0	Sterilize Canal Water	8,200	8,200	8,200	8,200	8,200
3.0	Remove Canal Sediment	190,180	190,180	190,180	190,180	190,180
4.0	Optimize Demin. System	49,000	29,000	24,200	24,200	24,200
5.0	Reduce Leak Rate (Clay)	0	19,120	0	19,120	0
6.0	Install Liners In Canal	0	0	37,600	37,600	0
7.0	Scarify Canal	0	0	0	0	178,400
8.0	Apply Fixative	0	108,000	0	0	108,000
9.0	Install Shielding	0	0	0	0	40,200
10.0	Drain Canal	0	0	0	0	16,400
	SUBTOTAL	391,880	499,000	404,680	423,800	710,080
Construction Nonmanual		280,800	304,200	327,600	351,000	374,400
H&S Materials/Equipment		60,000	65,000	70,000	75,000	80,000
	SUBTOTAL	732,680	868,200	802,280	849,800	1,164,480
Design Engineering @ 10%		73,268	86,820	80,228	84,980	116,448
	SUBTOTAL	805,948	955,020	882,508	934,780	1,280,928
Contingency @ 20%		161,190	191,004	176,502	186,956	256,186
	TOTAL	967,138	1,146,024	1,059,010	1,121,736	1,537,114

6. RECOMMENDED INTERIM REPAIR PLANS

The interim closure plan described in Sect. 4.1, Source Control, is recommended as the most cost-effective and expedient interim repair. While this plan does not stop the leak, it eliminates most of the hazardous substances, including radioactive elements, from the leak. It thereby mitigates the impact of the release to the public and the environment. It also contributes to any potential long-term remedial action, because it removes a major source of contamination. This action is not intended to be the final, long-term remedy. Further investigation of remedial alternatives according to the criteria presented in Sect. 400.430 of the National Contingency Plan(NCP) is necessary.

If DOE/ORNL prefers to undertake an action that stops the leak, the interim closure plan in Sect. 4.6 (a clay and plastic double-liner system) is recommended. This plan provides assurance that the leak will be stopped; it also maintains the same degree of shielding of site workers from radiation because water levels within the canal are maintained. The double-liner design provides a greater certainty for performance, compared with the plans presented in Sects. 4.3 and 4.5, at only a small additional cost.

6.1 BASIS OF SELECTION

The primary basis for selection of the preferred alternative is the degree to which it abates, prevents, minimizes, stabilizes, mitigates, or eliminates the threat to public health or welfare or the environment. A secondary basis is the degree to which the evaluation meets the following nine elements for evaluating remedial action alternatives:

- Overall protection of human health and the environment
- Compliance with ARARs and "To Be Considered" (TBCs) policies such as DOE Orders
- Long-term effectiveness and permanence
- Reduction in toxicity, mobility, and volume through treatment
- Short-term effectiveness
- Implementability
- Cost
- State acceptance
- Community acceptance

Because of the limited time available to develop and evaluate alternatives, state and community acceptance could not be evaluated. Nor could a quantitative assessment of the degree to which risk is reduced by the recommended alternative be performed. Rather, risk is assessed in a qualitative manner.

The alternative in Sect. 4.1, Source Control, is recommended as the best alternative because it has the shortest implementation schedule and the lowest cost. It will allow only relatively clean water to be released from the canal until final closure has eliminated leakage. The major disadvantage of this plan is that the water in the leak will act as a driving force (or "head") behind the material that has already been released from the canal to the subsurface. This may not be politically acceptable to the local community or the State.

If the alternative in Sect. 4.1 is not acceptable, the alternative in Sect. 4.6, Liner and Clay, is recommended. While this alternative is more costly and requires a longer implementation schedule, it will stop water leaks from the canal and removes a major source of contamination (the bottom sediment).

Both alternatives will reduce toxicity, mobility, and volume through treatment. The bottom sediment will be treated within the facility's existing wastewater treatment system, in compliance with NPDES discharge standards. In Plan 4.1, the use of an ion exchange/demineralizer treatment system will reduce the toxicity of the canal water to approximately drinking water standards. Both of the alternatives in Sects. 4.1 and 4.6 contribute to any potential final remedy through the removal and treatment of a major source of contamination (the bottom sediment). However, the alternative in Sect. 4.1 may be more effective because it minimizes the amount of debris that must be ultimately disposed or decontaminated; both the clay and plastic liners under the alternative in Sect. 4.6 would be classified as wastes at the time of final closure and would require final disposition.

7. REFERENCES

Oak Ridge National Laboratory. *RCRA Interim Closure Plan for 3001 Storage Canal.* ORNL/TM-11684. November 1990. Oak Ridge, Tennessee, 1990a.

Oak Ridge National Laboratory. *Release Report and Preliminary Action Plan for the Interim Closure of the 3001 Storage Canal at the Oak Ridge National Laboratory.* May 1990. Oak Ridge, Tennessee, 1990b.

Appendix A

3001 STORAGE CANAL SEDIMENT HANDLING ALTERNATIVES EVALUATION

CONTENTS

1. INTRODUCTION A-5

2. BACKGROUND A-6
   2.1 STATEMENT OF PROBLEM A-6
   2.2 SEDIMENT CHARACTERISTICS A-6
   2.3 ORNL WASTE HANDLING FACILITIES A-6

3. EVALUATION CRITERIA A-8
   3.1 INTRODUCTION A-8
   3.2 LONG-TERM STABILITY OF WASTE FORM A-8
   3.3 COST EFFECTIVENESS A-8
   3.4 RADIOLOGICAL EXPOSURE A-8
   3.5 SAFETY AND ENVIRONMENTAL RISK A-8
   3.6 SCHEDULE IMPACTS A-8
   3.7 HANDLING/TRANSPORTATION REQUIREMENTS A-9
   3.8 PERMIT AND REGULATORY REQUIREMENTS A-9

4. SEDIMENT HANDLING ALTERNATIVES A-10
   4.1 NO ACTION A-10
   4.2 PUMP TO LLLW EVAPORATOR VIA WC-19 ..... A-10
      4.2.1 Long-Term Stability A-10
      4.2.2 Cost Effectiveness A-11
      4.2.3 Radiological Exposure A-11
      4.2.4 Safety and Environmental Risk A-11
      4.2.5 Schedule Impacts A-11
      4.2.6 Handling/Transportation Requirements A-11
      4.2.7 Permits and Regulatory Requirements A-12
   4.3 SOLIDIFY AND STORE/DISPOSE A-12
      4.3.1 Long-Term Stability A-12
      4.3.2 Cost Effectiveness A-12
      4.3.3 Radiological Exposure A-12
      4.3.4 Safety and Environmental Risk A-13
      4.3.5 Schedule Impacts A-13
      4.3.6 Handling/Transportation Requirements A-13
      4.3.7 Permits and Regulatory Requirements A-14
   4.4 DRUM AND STORE IN CANAL A-14
   4.5 STORE IN LINED CANAL, LOOSE A-14
   4.6 TRUCK TO LLLW SYSTEM A-14
      4.6.1 Long-Term Stability A-14
      4.6.2 Cost Effectiveness A-15
      4.6.3 Radiological Exposure A-15
      4.6.4 Safety and Environmental Risk A-15
      4.6.5 Schedule Impacts A-15

4.6.6 Handling/Transportation Requirements A-15
4.6.7 Permits and Regulatory Requirements A-15
4.7 STORE IN CONTAINERS IN WASTE STORAGE AREA A-16

5. ALTERNATIVES EVALUATION A-17

6. CONCLUSIONS A-19

1. INTRODUCTION

Removal of the sediment from the Bldg. 3001 Storage Canal will be performed as part of the interim closure of the canal. This report presents an analysis of the treatment, storage, and disposal (TSD) options for this sediment. The sediment removal/collection process is not directly considered in this analysis.

2. BACKGROUND

2.1 STATEMENT OF PROBLEM

An estimated 275 gal of sediment rests on the bottom of the 3001 Storage Canal. This sediment is classified as a RCRA hazardous waste and a transuranic (TRU) waste, and is contaminated with cobalt-60, strontium-90, and cesium-137. The interim closure plan for the canal requires removal of this sediment. This report evaluates TSD methods for this sediment in light of regulatory requirements, ORNL waste-handling capabilities, and implementability.

2.2 SEDIMENT CHARACTERISTICS

The physical properties and consistency of the sediment on the bottom of the 3001 Storage Canal are unknown but are assumed to be typical of sediments in open pools. Most of the material is thought to be the result of 45 years of dirt, dust, algae, rust, and concrete particles settling to the bottom of the canal.

The sediment is contaminated because of material handling operations in the canal. Sample analyses have shown the sediment to exceed RCRA toxicity limits either under extraction procedure (EP) toxicity or under TCLP. The sediment is approximately 50% above the allowable limits for cadmium and lead. The sediment is also classified as TRU waste, with sample results varying from 2 to 10 times the 100 Nci/g limit for TRU isotopes. Some preliminary dose rate estimates indicate that unshielded waste drums filled with this sediment would measure 1 rem/h, classifying them as remote-handled TRU (RH-TRU) for ORNL waste management purposes. These estimates are conservative and do not take solidification into account. The drums could probably be loaded or shielded so that they are below the 200 mrem/h contact-handled TRU (CH-TRU) limit.

2.3 ORNL WASTE HANDLING FACILITIES

The ORNL waste-handling facilities of concern in this evaluation are the LLLW treatment system, the Melton Valley storage tanks (MVST), and the solid waste storage areas (SWSAs).

The ORNL LLLW treatment system is a RCRA-permitted radioactive waste evaporator. Radioactive liquid waste is generated in various facilities throughout the site and is stored in holding tanks located near the waste sources. The waste is then transferred to the evaporator facility which includes a feed tank, two evaporators, and three tanks to store the concentrated waste from the evaporator. The eight MVSTs are also used to store concentrate from the evaporator. The condensate from the evaporators is discharged to the Process Waste Treatment System (PWTS). The waste acceptance criteria (WAC) for the LLLW system allow it to be used for TRU-contaminated waste as long as the concentration of TRU isotopes in the waste solution is less than 100 Nci/g. The reported TRU content of the sediment is for the solid portion, and dilution with carrier water can be performed to meet this criterion. Much of the sediment already in tanks of this system is classified as TRU waste.

The eight 50,000 gal MVSTs were originally staging tanks for waste to be injected into the ground in the hydrofracture program. Since that program was halted, the tanks have been used

to store concentrated radioactive wastes. The wastes in these tanks are contaminated with various chemicals and radionuclides from ORNL operations. The sludges in the MVSTs are classified as mixed TRU wastes. These wastes are being stored pending construction of the planned Waste Handling and Packaging Plant, which will process and package the waste to be sent to the Waste Isolation Pilot Plant (WIPP) or other TRU disposal facility if WIPP does not open. These tanks are filled to near capacity, and an in-tank evaporation project is planned to make more storage space available.

The SWSAs at ORNL are used for storage or disposal of dry radioactive wastes. The north part of SWSA 5, located in the Melton Valley area, is used for retrievable storage of TRU solid wastes. Buildings 7826 and 7834 are currently used to store CH-TRU wastes, but are scheduled for phase-out and replacement by a new TRU waste storage facility. The new facility will have a capacity of 3,000 55-gal drums. All of these facilities are RCRA permitted and can accept mixed wastes. If TRU waste drums exceed 200 mrem/h, they are classified as RH and would be stored in Bldg. 7855 or one of two planned RH-TRU waste storage bunkers in SWSA 5. These facilities are RCRA-permitted and store RH-TRU wastes in retrievable concrete casks.

If the final waste package is below RCRA hazardous and TRU limits, SWSA 6 may be used for disposal. SWSA 6 is a solid low-level radioactive waste disposal facility located in the Melton Valley area. This facility primarily consists of above-ground tumulus disposal units. It can accept CH-LLW and RH-LLW, but not TRU or mixed wastes. All of the SWSA facilities require waste containers to have no free-standing water, meaning that the sediment would have to be solidified or dewatered.

3. EVALUATION CRITERIA

3.1 INTRODUCTION

The following sections present the criteria used to evaluate proposed TSD options. Though some of the criteria may overlap, it is worthwhile to examine each of the following separately.

3.2 LONG-TERM STABILITY OF WASTE FORM

Long-term stability is a desirable characteristic of the selected TSD alternative. Stability of the waste form can be gauged by the leachability, friability, dryness, and/or isolation from the environment of the waste form. All of these factors influence the probability of release of hazardous constituents, the prevention of which is the objective of all good waste management practices.

3.3 COST EFFECTIVENESS

Cost effectiveness is an important factor when choosing among equally safe TSD alternatives. Funds available for environmental restoration at ORNL are finite and in view of the relatively small quantity of hazardous material involved, should not be over committed to this project.

Note that this criterion is cost effectiveness, and not just total cost. It may be justified to spend more if the final result of the TSD process is superior to other alternatives.

3.4 RADIOLOGICAL EXPOSURE

Minimization of radiological exposure to workers and the public is a DOE policy and should be considered when deciding between TSD alternatives. The radiological characteristics of the collected sediment are expected to present significantly more hazard than the RCRA hazardous chemical components and therefore, this criterion is important.

3.5 SAFETY AND ENVIRONMENTAL RISK

Safety and environmental risks are considered from the aspect of upset conditions. In this particular case, spills of the sediment during TSD operations are the primary concern. Spills may cause workers or the environment to be exposed to radiation and hazardous chemicals, and will certainly require extra effort to clean up. Another consideration under this criterion is industrial safety, though in general it is assumed that all normal safety precautions are followed.

3.6 SCHEDULE IMPACTS

Significant schedule differences between TSD methods can be used to rank alternatives. Longer schedules will generally require a larger commitment of limited resources than shorter schedules and may impact budget, radiological exposure, and the probability of accidental releases to the environment.

3.7 HANDLING/TRANSPORTATION REQUIREMENTS

Handling and transportation of radioactive waste at ORNL is a concern. Recent policy decisions to follow U.S. Department of Transportation (DOT) regulations for on-site transportation of wastes have imposed restrictions on waste package movements. In addition, vehicles for transporting certain forms of waste may not be available at ORNL. There are likely to be restrictions on handling and processing radioactive wastes in the canal area because of space limitations in the canal room and because Bldg. 3001 is used for offices and a museum.

3.8 PERMIT AND REGULATORY REQUIREMENTS

A TSD method must meet all regulatory and permit requirements and may be eliminated from consideration if it cannot be made to meet those requirements. Also, any alternative that will require application for new permits would not be looked on favorably because of the time and effort involved in permitting. DOE will comply with RCRA and other environmental laws and, therefore, TSD alternatives must comply with those regulations.

4. SEDIMENT HANDLING ALTERNATIVES

The following sections present the sediment-handling alternatives considered for this evaluation. Each of the evaluation criteria is discussed for each alternative. A score, consisting of (0), (+), or (-) was assigned to each alternative for each criterion based on these discussions. A (+) indicates that the alternative is thought to be better than most at meeting the criterion. A (-) indicates that the alternative is worse, and a (0) indicates that the alternative is average with respect to the criterion under consideration. These scores are subjective and based on the preliminary information available at the time of this evaluation. The following discussions explain the basis for each assigned score.

4.1 NO ACTION

The no-action alternative assumes that no interim closure is performed and that the sediment remains in place at the bottom of the canal. The canal would remain full of water and would continue to leak approximately 400 gal/d from unknown locations in the canal. This alternative is not considered acceptable, but is included here for completeness. Leaving the sediment in place allows a known hazardous waste to be stored in what is known to be a leaking tank in violation of the RCRA. The no-action alternative is, therefore, ruled out on regulatory grounds.

4.2 PUMP TO LLLW EVAPORATOR VIA WC-19

This alternative assumes that the sediment is slurred to the LLLW system and evaporated. The demineralizer system currently operating in Bldg. 3001 discharges to the LLLW system when the ion exchange resins are regenerated. The sediment removal system could be connected to the LLLW system via the demineralizer intake piping in the canal room. The demineralizers would be bypassed, creating a direct route to the LLLW system. This alternative would require the sediment to be diluted by carrier water to move it through the LLLW system, yielding an estimated 3000 to 6000 gal of wastewater. This compares to the approximately 25,000 gal/month throughput of the LLLW system. The evaporator would then reconcentrate the waste before it goes to a storage tank.

The LLLW holding tank for the Bldg. 3001 area is Tank WC-19; there is no other existing route to the LLLW system from that area. This tank is known to have in-leakage and, therefore, its integrity is suspect. This alternative assumes that Tank WC-19 is available for waste transfer, either under a regulatory interpretation or under a waiver. If Tank WC-19 is not available, this alternative would be ruled out. Transfer via newly-installed piping is also ruled out on cost and practicality considerations.

4.2.1 Long-Term Stability

This alternative does not immediately stabilize the waste. The sediment would be added to the hundreds of thousands of gallons of sludge, sediment, and concentrated liquid already collected in the LLLW system and would be treated when that material is treated. Because it will be temporarily handled and stored in a system designed and permitted for this type of waste, long-term stability is not a significant concern for this alternative.

Long-Term Stability Score: (0)

4.2.2 Cost Effectiveness

Handling this waste in the existing system is expected to be the most cost-effective alternative. In particular, the project-specific work will only consist of one simple piping modification. No other handling of the sediment outside of the canal would be required and no solidification subcontractor would be required.

Cost Effectiveness Score: (+)

4.2.3 Radiological Exposure

This alternative would result in minimal radiological exposure to workers. The sediment would be piped directly from the hydrovacuum system to the LLLW system and would require no handling outside of the canal. A dose assessment was performed for this alternative and the total dose from waste handling was estimated to be only 65 mrem (Appendix C).

Radiological Exposure Score: (+)

4.2.4 Safety and Environmental Risk

There are no specific industrial safety concerns with this alternative. Environmental risk for this alternative is a function of the integrity of the LLLW system. This option assumes that Tank WC-19 is acceptable for use, and that the environmental risk is, therefore, acceptable. From a conceptual standpoint, a brief transfer through a leaking tank to a RCRA-permitted facility should have much less risk than a continuing uncontrolled release from the leaking canal.

Safety and Environmental Risk Score: (+)

4.2.5 Schedule Impacts

The LLLW system is currently operating at near capacity and scheduling of transfers to that system must take advantage of available slack periods. Because of the relatively small volume of waste involved, this is not expected to result in any schedule delays to the canal interim closure.

Schedule Impacts Score: (+)

4.2.6 Handling/Transportation Requirements

This alternative requires no handling or transportation of the sediment outside the canal.

Handling/Transportation Requirements Score: (+)

4.2.7 Permits and Regulatory Requirements

No new permit requirements have been identified for this waste handling alternative. The LLLW system is already a RCRA permit-by-rule facility and its acceptance criteria allow diluted TRU solutions. This alternative is dependent on WC-19 remaining in operation by meeting regulatory requirements.

Permits and Regulatory Requirement Score: (+)

4.3 SOLIDIFY AND STORE/DISPOSE

This alternative involves solidifying the waste followed by transporting the solidified waste to a SWSA for disposal. The solidification process could be any of a number of technologies as long as the final product is a stable, monolithic mass that restricts the mobility of the hazardous constituents and has no free-standing water. Solidification should easily make the waste below RCRA limits because the sediment is only slightly above the EP toxicity characteristic limits in its current form. The waste can then be handled as a radioactive waste without concern for RCRA regulations. Pending final surveys of the drums, the waste may be classified as TRU or as LLW. SWSA 5 can accept TRU solid wastes for retrievable storage. SWSA 6 can accept stabilized, dry, low-level radioactive wastes the solidified product meets those acceptance criteria.

4.3.1 Long-Term Stability

Assuming that the waste is solidified properly, this is the best alternative for immediately producing a long-term stable waste form. The waste will be in a form suitable for final disposal and will be stored in a regulated radioactive waste facility. Depending on final WIPP waste acceptance criteria, the waste may have to be repackaged before final disposal. The same is true for existing TRU wastes stored at ORNL, so this small quantity is relatively insignificant.

Long-Term Stability Score: (+)

4.3.2 Cost Effectiveness

This alternative may present severe problems when considered from a standpoint of cost effectiveness. The fixed costs involved with bringing a solidification contractor on site for less than 20 drums of waste are very high. For example, to assure proper solidification, treatability studies must be performed with waste samples and the contractor's process. These studies cost approximately the same for 300 gal or for 30,000 gal of sediment. The staging, set-up, and tear-down for the solidification equipment is another example of a fixed cost that becomes excessive because it cannot be spread over a large job.

Cost Effectiveness Score: (-)

4.3.3 Radiological Exposure

Radiological exposure to workers from handling of the sediment could be significant with this alternative. Drums of sediment must be staged to the solidification area and the solidified material, also in drums, must be transported to a SWSA. A dose assessment was performed for

this alternative and the total dose from waste handling was estimated to be 2,282 mrem (Appendix C). This assessment was based on a solidification process proposed by Chem-Nuclear Environmental Services. A remote handling system, which could reduce radiation exposures, would not be practical for such a small job. Other solidification scenarios may result in reduced but still significant radiological exposures.

Radiological Exposure Score: (-)

4.3.4 Safety and Environmental Risk

Processing of radioactive sediment in and around Bldg. 3001 presents the possibility of spills and/or exposure and the associated risks to large numbers of personnel who work in the area. Handling of full, radioactive drums must be performed with caution, though this is a fairly common industrial operation. Because the sediment would be solidified before transportation, the environmental risk of a drum spilled during transport would be minimal.

Safety and Environmental Risk Score: (0)

4.3.5 Schedule Impacts

The primary schedule concern under this alternative is the treatability study. These studies can take months and while this is proceeding, completion of the canal work would be hindered by the presence of radiologically hot drums of sediment in the canal area. In addition, some project resources would remain committed until the solidification program was completed, possibly many months after completion of interim closure.

Schedule Impacts Score: (-)

4.3.6 Handling/Transportation Requirements

The solidified waste would have to be handled as radioactive material. Transportation of the drums on the ORNL site will require compliance with DOT regulations. This may require review of ORNL transportation procedures and equipment, though transport of this solidified waste is not expected to be a problem.

This alternative calls for significant processing and handling of the sediment. Because space in the canal area is limited, the staging and setup of a solidification system may be difficult. In addition, this activity is likely to impact ongoing operations in and around Bldg. 3001

Handling/Transportation Requirements Score: (0)

4.3.7 Permit and Regulatory Requirements

The Oak Ridge Reservation (ORR) RCRA permit allows this waste handling and treatment under the corrective action portion of the permit. In addition, SWSA 5 and SWSA 6 are permitted radioactive waste disposal facilities. This alternative would require no new permit or regulatory considerations.

Permit and Regulatory Requirements: (+)

4.4 DRUM AND STORE IN CANAL

This alternative would transfer the sediment to stainless steel drums and store the drums under water in the repaired canal. RCRA Subtitle C regulations (40CFR264.196) state that any tank system that undergoes major repairs (including installation of an internal liner) shall not be returned to service unless it is certified by a qualified, registered, professional engineer that the repaired system is capable of handling hazardous/radioactive materials without release for the intended life of the system. It is not likely that the canal could be certified to hold hazardous or radioactive materials; therefore, this alternative will not be considered further. In addition, use of this canal as a mixed waste storage facility may require modification of the ORR RCRA permit.

4.5 STORE IN LINED CANAL, LOOSE

This alternative assumes that the sediment is returned to a liner that would be installed in the canal. RCRA Subtitle C regulations state that any tank system that undergoes major repairs (including installation of an internal liner) shall not be returned to service unless it is certified by a qualified, registered, professional engineer that the repaired system is capable of handling hazardous/radioactive materials without release for the intended life of the system. It is not likely that this system could be certified to hold hazardous or radioactive materials and, therefore, this alternative will not be considered further. In addition, use of this canal as a mixed waste storage facility may require modification of the ORR RCRA permit.

4.6 TRUCK TO LLLW SYSTEM

In this alternative, the sediment would be transported over land to the LLLW system. The sediment would be transported in drums or a tanker truck and then pumped into a waste tank or header leading to the LLLW evaporator. Because of the relatively small quantity of waste involved, this operation would have minimal impact on ORNL liquid waste management activities.

4.6.1 Long-Term Stability

This alternative would add the sediment to the hundreds of thousands of gallons of waste awaiting final processing in the evaporator condensate tanks and the MVSTs. Because these systems are designed for storage of waste materials before treatment, long-term stability is not a significant concern for this alternative.

Long-Term Stability Score: (0)

4.6.2 Cost Effectiveness

Assuming that there are no unforeseen significant costs associated with transportation on-site, this should be an inexpensive alternative. A neutral score is assigned to allow for transportation contingencies.

Cost Effectiveness Score: (0)

4.6.3 Radiological Exposure

This alternative would result in radiological exposure to workers staging, transporting, and emptying the waste drums. Because there is no processing of the waste, doses are expected to be somewhat less than the solidification alternative. Decontamination of the tanker truck or waste drums may also result in some additional exposure.

Radiological Exposure Score: (-)

4.6.4 Safety and Environmental Risk

Handling and transportation of liquid-filled drums has a higher risk of spills than solidification or pumping the waste to LLLW.

Safety and Environmental Risk Score: (-)

4.6.5 Schedule Impacts

Assuming that there are no administrative delays with transportation across the site, this alternative should have no adverse schedule impacts. The waste could be removed from the canal area almost immediately, thereby ensuring efficient completion of the remainder of the canal interim closure with no measures to mitigate the presence of hot drums.

Schedule Impacts Score: (+)

4.6.6 Handling/Transportation Requirements

Transportation requirements are the greatest potential problem with this alternative. ORNL is currently having difficulty reconciling the proposed Secretary of Energy Notification (SEN) on DOT regulations with their on-site operations. If this continues, transportation of these sediments could be delayed, thereby impacting schedule, budget, and radiological exposure. Special packaging and vehicles, and a significant amount of documentation, may be required.

Handling/Transportation Requirements Score: (-)

4.6.7 Permit and Regulatory Requirements

The only significant regulatory concerns with this alternative are those associated with transportation as discussed above.

Transportation of liquid radioactive materials has more regulatory restrictions than transportation of solids as would be the case under the solidification alternative.

Permit and Regulatory Requirements Score: (0)

4.7 STORE IN CONTAINERS IN WASTE STORAGE AREA

Under this alternative, the sediment would be pumped to drums or other containers and transported to a waste storage facility at ORNL pending final treatment or disposal. However, ORNL currently has no waste storage facility that can accept TRU waste with free-standing water. Construction of such a facility appears to be in contradiction of DOE Order 5820.2A, which states that a TRU waste must be treated to WIPP waste acceptance criteria (WAC) prior to interim storage. If this were done, this option would be equivalent to the solidify and store option discussed above. In addition, this is a mixed waste and under the Land Disposal Restrictions, storage of mixed waste for more than one year is prohibited except, "solely for the purpose of accumulation of such quantities of hazardous waste as necessary to facilitate proper recovery, treatment, or disposal." Because treatment of this waste can be accomplished by solidification or processing / storage with the LLLW system, this type of long-term storage would be difficult to justify. Based on these concerns, this option is ruled out on regulatory grounds.

5. ALTERNATIVES EVALUATION

The sediment TSD alternatives were ranked based on the discussions found in Sect. 4 of this report. The assigned scores were summed, giving a ranking of the alternatives. Figure 1 summarizes the evaluation of the three alternatives that were not ruled out. From Fig. 1, the alternatives can be ranked as follows:

1. Pump to LLLW via Tank WC-19
2. Solidify and Store/Dispose
3. Truck to LLLW

All of these alternatives are dependent on regulatory and permit considerations, and some may be eliminated when these issues are resolved.

EVALUATION CRITERIA	TSD ALTERNATIVES: PUMP TO LLLW	SOLIDIFY / DISPOSE	TRUCK TO LLLW
LONG-TERM STABILITY	0	+	0
COST EFFECTIVENESS	+	-	0
RAD. EXPOSURE	+	-	0
SAFETY & ENV. RISK	+	0	-
SCHEDULE IMPACTS	+	-	+
HANDLING/TRANSPORT	+	0	-
PERMITS/REGS.	+	+	0
TOTAL SCORE	+6	-1	-2

NOTES: STORAGE OF THE SEDIMENT IN THE CANAL (IN DRUMS OR LOOSE) WAS ELIMINATED FROM CONSIDERATION BECAUSE, THIS FACILITY COULD NOT BE CERTIFIED TO HOLD HAZARDOUS AND RADIOACTIVE WASTE AS REQUIRED BY RCRA REGULATIONS.

STORAGE OF SEDIMENT/SLURRY IN CONTAINERS AT ORNL WAS RULED OUT BASED ON WIPP WAC REQUIREMENTS ANDLAND DISPOSAL RESTRICTIONS.

THE NO ACTION ALTERNATIVE WAS ELIMINATED FROM CONSIDERATION BECAUSE FAILURE TO REPAIR THE CANAL WOULD BE IN VIOLATION OF RCRA REGULATIONS.

Fig. 1. 3001 Canal sediment disposition alternatives evaluation.

6. CONCLUSIONS

Sending the sediment as a slurry through the existing piping to the LLLW evaporator has an overwhelming number of advantages over the other alternatives. If a regulatory determination allows Tank WC-19 and its associated piping to remain in service, there is no question that this is the best TSD method for the sediment.

Solidification of the sediment and storing/disposing it (probably in SWSA 5) is only recommended if regulatory determinations prohibit pumping the sediment to LLLW. A solidification campaign will be expensive and can have considerable uncertainty pending the outcome of treatability studies. This can lead to budget and schedule overruns. The radiological exposure involved with this process is expected to be many times that required to pump the waste to LLLW. In defense of this alternative, the end result—a stable waste form suitable for disposal—is superior to the other alternatives (which basically store the waste for later, more economical treatment).

If Tank WC-19 is not available, trucking the sediment to the LLLW system should be further investigated. If the transportation regulations can be met, this is an inexpensive alternative that will meet all regulatory requirements. The biggest disadvantage of this alternative versus pumping the waste to LLLW is the probability of higher radiological exposures.

Appendix B

HEALTH RISK ASSESSMENT FOR THE 3001 STORAGE CANAL

The document originally intended to be included as Appendix B of this report has been published as *Health Risk Assessment for the Building 3001 Storage Canal at Oak Ridge National Laboratory, Oak Ridge, Tennessee,* ORNL/ER-51.

Report No. ORNL/ER-51 has been reproduced directly from the best available copy.

Available to DOE and DOE contractors from the Office of Scientific and Technical Information, P.O. Box 62, Oak Ridge, TN 37831; prices available from 615-576-8401, FTS 626-8401.

Available to the public from the National Technical Information Service, U.S. Department of Commerce, 5285 Port Royal Rd., Springfield, VA 22161.

Appendix C

DOSE ASSESSMENT OF CANAL SEDIMENT DISPOSAL PLANS

Dose Assessment of

Canal Sediment Disposal Plans

August 15, 1990

K. R. Geber, Radiological Engineering Group

J. A. Scircle, Radiological Engineering Group

Approved By:

R. L. Mlekodaj, Supervisor

Dose Assessment of Canal Sediment Disposal Plans

Statement of Work:

The Radiological Engineering Group was asked to screen, on the basis of dose to personnel, two sediment disposal plans associated with closure operations of the underground storage canal between buildings 3001 and 3019. The following disposal plans were considered:

1) Filtration and demineralization of the canal water with subsequent solidification and onsite disposal of all extracted sediment.

2) Separation of the sediment; removal and disposal of coarse particles and transfer of remaining sediment to the existing low level liquid waste (LLLW) process stream.

The intent of this work was to provide a semiquantitative analysis of the two disposal plans for comparative purposes. This document should not, however, be used as the basis for establishing radiation protection controls if and when either plan is implemented.

Evaluations of the two disposal plans were based on meetings with the project manager, G. J. Mandry, reports provided by Mandry and site visits. Specific details of the two plans were generally not available, thus many conservative assumptions and estimates had to be made.

Methodology:

A sediment removal technique common to both plans includes *hydrocloning*, a system similar to pool vacuuming. Whereas Plan 1 specifies collection of all particle sizes in excess of 1 micron (approximately 90% of the sludge) in disposable filters, Plan 2 utilizes a *knockout canister* separating only very large solids (approximately 5-10% of the sludge). The remaining solids are to be resettled in the deep end of the canal. In both plans. disposal of the removed solids (contents of the knockout canister and the disposable filters) is via onsite burial.

Dissimilarities include disposition of the remaining sediment relocated in the deep end of the canal. Plan 1 incorporates a mixed bed demineralizer and a sub-micron filtration unit to treat the remaining suspended and dissolved solids. All sediments removed in Plan 1 are to be solidified in a cement matrix in Type 17H 55 gallon drums. Plan 2 calls for further *hydrocloning* and transfer of the remaining sediment to an existing underground LLLW holding tank.

Estimated Potential Dose to Personnel: Plan 1

The quantities used in calculations reported below are dose and dose rate. Calculated doses are based on the tasks being performed by a single individual. However, collective doses can be divided by the number of individuals performing a particular task.

Details of Plan 1 were provided by G. J. Mandry in the form of a budgetary estimate report prepared by Chem-Nuclear Environmental Services, Inc. (CNES). As described in the CNES report, Plan 1 consists of two stages: removal and solidification of sediment particles in excess of one micron, and removal and solidification of sub-micron size suspended and dissolved particles. The reported mass of sediment in the canal is approximately 595 Kg. At 90% removal, the first stage will generate 149 filters. Stage 2 will generate 34 disposable filters.

Based on expected filter loading of 3.6 Kg for the one-micron rated filters, the calculated dose rate at contact (unshielded) is 0.58 mSv/h. Filter change-outs will be done underwater and spent filters in groups of seven are to be stored in underwater racks. Dose rates from full racks handled above water are estimated at 4.1 mSv/h per rack. 21 racks contact handled approximately five minutes each will be required for the first stage extraction yielding a dose of 7.1 mSv. Divided among a crew of three, each would receive in excess of 2.3 mSv.

Each rack will be solidified in a 55 gallon drum in a cement matrix. The dose rate at contact (unshielded) is calculated at 0.40 mSv/h per drum. 21 drums will be required. Contact handling time per drum is estimated at one hour yielding a dose of 8.4 mSv.

The dose rate at contact (unshielded) of stage 2 filters, at 1.8 Kg loading, is calculated at 0.30 mSv/h per filter. There would be 34 second stage filters used in conjunction with a mixed bed demineralizer and operated on the canal deck without the advantage of a water shield. If five minutes were required to change each filter, the dose would be 0.85 mSv. The racks for these filters are capable of holding 12 filters, thus generating three racks (and subsequently three waste barrels). The estimated dose, given 0.30 mSv/h per filter, 12 filters per rack, and a contact handling time of five minutes is 0.90 mSv.

Each rack will be solidified in a 55 gallon drum in a cement matrix. The dose rate at contact (unshielded) is calculated at 0.057 mSv/h per drum. Three drums will be required. Contact handling time per drum is estimated at one hour yielding a dose of 0.17 mSv.

The demineralizer vessel also requires disposal. When finished processing, the dose rate of the vessel is calculated to be 0.16 mSv/h. If disposed of in the same manner the associated dose is expected to be negligible.

In addition, there will be dose associated with working in the canal area, which has an elevated level of background radiation. The first stage vacuuming effort is expected to require 240 person-hours at a background dose rate of 0.015 mSv/h yields an additional collective dose of 3.60 mSv. Similarly, stage 2 will require 120 person-hours to complete, resulting in 1.80 mSv additional dose.

Estimated Potential Dose to Personnel: Plan 2

Plan 2 also consists of two stages: removal of coarse sediment particles and transfer of the remaining fine sediment into the existing LLLW processing stream.

The first stage will be conducted primarily underwater, but will generate one 30-gallon drum of solid waste. Upon completion, the dose rate of this waste drum at contact (shielded) is assumed to be 0.05 mSv/h. As in Plan 1, the contact handling time for transportation and burial of this drum is estimated at one hour, yielding a dose of 0.05 mSv. Similar to Plan 1, there will be dose associated with working in the canal area, which has an elevated level of background radiation. Assuming that stage one will take 24 person-hours to complete, a collective dose of 0.36 mSv will be received.

The second stage of Plan 2 involves connecting a vacuum line between the canal and the LLLW line, bypassing the demineralizer. This job will require 4 person-hours to complete, resulting in a 0.06 mSv dose from background radiation in the canal area. The remainder of stage 2, transferring the sediment to the LLLW process stream, will be conducted remotely. Operators will not be in close proximity to the waste stream, but will be subject to an additional 0.18 mSv dose from background (12 person-hours). Specific details of LLLW processing were unavailable for analysis. However, these doses are reported to be negligible, and for this report the dose to waste operators subsequently processing the LLLW is considered to be essentially zero.

Comparative Analysis:

The preceding analyses yield the following total collective dose estimates for the two plans being considered:

Plan 1 (solidification)	22.82 mSv	(2,282 mrem)
Plan 2 (LLLW)	0.65 mSv	(65 mrem)

The uncertainties in these dose estimates are considerable. The information available was insufficient to allow calculation of more definite values, several possible dose influencing factors could not be evaluated, and many assumptions had to be made. However, the intent of dose assessment for comparative purposes has been demonstrated. These results should not, however, be used as the basis for establishing radiation protection controls if and when either plan is implemented.

Appendix: Assumptions

General Assumptions (applicable to both plans):

1. Radioactivity in sediment is assumed to be distributed uniformly with respect to particle size and location in canal.
2. Beta skin dose is not included in dose estimates.
3. Neutron dose is not included because an isotopic analysis of transuranic radionuclides has not been performed.
4. Minimum contact handling time estimate per waste drum (one hour) includes transportation and burial.
5. Average background dose rate in the canal area is 0.015 mSv/h.
6. Dose received during dewatering activities is not included.
7. An eight-hour work day is assumed.

Plan 1 Assumptions:

1. Generally, stage 1 spent filters will not be handled above water except in full racks.
2. Minimum contact handling time for per rack is assumed to be 5 minutes.
3. Stage 2 filter change will not done remotely.
4. Stage 2 spent filters will be stored in racks of 12 underwater.
5. The total concentration of suspended or dissolved radioactivity is assumed to be 3000 Bq/L, based on ORNL sample 1WA (4-09-90). The volume of water in the canal is assumed to be approximately 250,000 L.
6. Stage 2 waste drums will include 11.43 cm of concrete shielding.

Plan 2 Assumptions:

1. Dose rate at the surface of the waste barrel (containing coarse sediment) will not exceed 0.05 mSv/h.
2. The knockout canister is maintained underwater during collection to take advantage of the shielding provided by water.
3. Stage 1 will take three persons one day to perform.
4. Stage 2 line connection and demineralizer bypass will take two persons two hours to complete.
5. Stage 2 sediment transfer (6000 gallons) will take three persons four hours to complete.
6. Dose attributable to final processing of LLLW is not included.

DISTRIBUTION

1. L. D. Bates
2. H. M. Braunstein
3. T. W. Burwinkle
4. J. S. Colley
5. K. W. Cook
6. M. F. P. Delozier
7. N. W. Durfee/L. V. Asplund
8. J. T. Etheridge
9. H. R. Gaddis
10. S. B. Garland
11. C. D. Goins
12. J. K. Greer
13. L. D. Hyde
14. L. L. Kaiser
15. A. J. Kuhaida
16. J. R. Lawson
17. V. Legg
18. G. J. Mandry
19. L. E. McNeese
20. C. E. Nix

21–22. P. T. Owen

23. G. E. Rymer
24. T. F. Scanlan
25. P. A. Schrandt
26. K. B. Swain
27. D. W. Swindle
28. D. R. Watkins
29. R. K. White
30. M. L. Whitehead
31. Central Research Library

32–36. ER Document Management Center—RC

37–38. ORNL Laboratory Records

39. ORNL Patent Section
40. Office of Assistant Manager for Energy Research and Development, DOE Oak Ridge Field Office, P.O. Box 2001, Oak Ridge, TN 37831-8600
41. P. H. Edmonds, Radian Corporation, 120 South Jefferson Circle, Oak Ridge, TN 37830

42–45. W. E. Murphie, Department of Energy, Office of Environmental Restoration, Eastern Area D&D Branch, EM-423 (GTN), Washington, DC 20545

46–47. S. S. Perkins, DOE Oak Ridge Field Office, Information Resource Center, 105 Broadway, Oak Ridge, TN 37830

48–49. S. P. Riddle, DOE Oak Ridge Field Office, P.O. Box 2001, Oak Ridge, TN 37831-8540

50–51. R. C. Sleeman, DOE Oak Ridge Field Office, P.O. Box 2001, Oak Ridge, TN 37831-8540

52–53. J. T. Sweeney, DOE Oak Ridge Field Office, P.O. Box 2001, Oak Ridge, TN 37831-8540

54–55. J. R. Kannard, Program Manager, Bechtel National, Inc., P.O. Box 350, Oak Ridge Corporate Center, 151 Lafayette Drive, Oak Ridge, TN 37830

56–67. Office of Scientific and Technical Information, P.O. Box 62, Oak Ridge, TN 37831

Central Research Library
X-4500N, MS-6208