MARTIN MARIETTA ENERGY SYSTEMS LIBRARIES
3 4456 0362925 0

ORNL/CON-335

ornl

OAK RIDGE NATIONAL LABORATORY

MARTIN MARIETTA

ALTERNATIVE NON-CFC MOBILE AIR CONDITIONING

V. C. Mei, F. C. Chen, and D. M. Kyle
Energy Division

OAK RIDGE NATIONAL LABORATORY
CENTRAL RESEARCH LIBRARY
CIRCULATION SECTION
4500N ROOM 175
LIBRARY LOAN COPY
DO NOT TRANSFER TO ANOTHER PERSON
If you wish someone else to see this report, send in name with report and the library will arrange a loan.
UCN-7969 (3 9-77)

September 1992

MANAGED BY
MARTIN MARIETTA ENERGY SYSTEMS, INC.
FOR THE UNITED STATES
DEPARTMENT OF ENERGY

This report has been reproduced directly from the best available copy.

Available to DOE and DOE contractors from the Office of Scientific and Technical Information, P.O. Box 62, Oak Ridge, TN 37831; prices available from (615) 576-8401, FTS 626-8401.

Available to the public from the National Technical Information Service, U.S. Department of Commerce, 5285 Port Royal Rd., Springfield, VA 22161.

This report was prepared as an account of work sponsored by an agency of the United States Government. Neither the United States Government nor any agency thereof, nor any of their employees, makes any warranty, express or implied, or assumes any legal liability or responsibility for the accuracy, completeness, or usefulness of any information, apparatus, product, or process disclosed, or represents that its use would not infringe privately owned rights. Reference herein to any specific commercial product, process, or service by trade name, trademark, manufacturer, or otherwise, does not necessarily constitute or imply its endorsement, recommendation, or favoring by the United States Government or any agency thereof. The views and opinions of authors expressed herein do not necessarily state or reflect those of the United States Government or any agency thereof.

DOE F 1332.15
(10-90)
All other editions are obsolete

U.S. DEPARTMENT OF ENERGY

DOE AND MAJOR CONTRACTOR RECOMMENDATIONS FOR ANNOUNCEMENT AND DISTRIBUTION OF DOCUMENTS

(See Instructions on Reverse Side)

OMB Control No. 1910-1400
Burden Disclosure Statement on back

1. DOE Report No.	2. DOE Contract No.	3. DOE Funding Office	4. OSTI UC or C Category No.
ORNL/CON-335	DE-AC05-84OR21400	EC 01 04 00 0	UC-330

5. Title
ALTERNATIVE NON-CFC MOBILE AIR CONDITIONING

6. Type of Document ("x" one)

a. Scientific and technical report: ☐ monthly ☐ quarterly ☐ annual ☐ final XX topical ☐ special/public interest ☐ other

b. Conference paper: Name of conference (no abbreviations) _____

Location (city/st/ctry) _____
Date (mo/day/yr) _____ Sponsor _____
Contents: ☐ proceedings ☐ viewgraphs ☐ paper ☐ poster sessions

c. Computer Media:
Document is accompanied by ☐ magnetic tape(s) _____
☐ diskette(s) _____
☐ other (specify) _____

d. Other (e.g., journal article, manuscript, manual, etc.) (specify) _____

7. Copies Transmitted to OSTI ("x" one or more). See instructions on Reverse.

☐ a. Copies for unclassified distribution.
XX b. Twelve copies for OSTI processing and NTIS sales.
☐ c. Twenty-five additional copies for special/public interest.
☐ d. Two reproducible copies for OSTI processing.
☐ e. Copies for special distribution.
☐ f. Copies for classified distribution as defined in M-3679.
☐ g. One copy for OSTI classified processing.

8. Document contains information pertaining to any of the following:

☐ Yes ("x" one or more) XX No (If no, unlimited distribution may be made within the U.S. In addition, copies may be made available to foreign requestors through exchange agreements or NTIS sales.)

☐ a. Classified
(Announce to appropriate recipients as listed in M-3679, "Standard Distribution for Classified Scientific and Technical Reports")
☐ b. Export Control/ITAR/EAR
☐ c. Proprietary Data
☐ d. Small Business Innovation Research (SBIR)
☐ e. Unclassified Controlled Nuclear Information (UCNI)
☐ f. Patent Hold
☐ g. Translations of copyrighted material
(Boxes b–g will be announced to Government agencies and their contractors)
☐ h. Cooperative Research and Development Agreement (CRADA)
☐ i. Other (explain) _____
(This designation must be in accordance with written DOE Program Office guidance. Attach copy of guidance.)

Upon demand, OSTI will make distribution of these documents in accordance with existing laws, regulations, and/or written program office guidance.

9. Patent Information

a. Does this information product disclose any new equipment, process, or material? XX No ☐ Yes If so, identify page nos. _____
b. Has an invention disclosure been submitted to DOE covering any aspect of this information product? XX No ☐ Yes
If so, identify the DOE (or other) disclosure number and to whom the disclosure was submitted.
c. Are there any patent-related objections to the release of this information product? XX No ☐ Yes If so, state these objections.

10. Additional information, remarks, and special handling instructions. (*Do not* identify Sigma categories for Nuclear Weapon Data reports, and *do not* provide additional instructions which are inconsistent with item 8 above.) (Continue on separate sheet, if necessary.)

11. Submitted by (Name and Position) (Please print or type)		Phone
R. A. Lawson, Laboratory Records Department Head		574-6764
Organization	**Signature**	**Date**
Oak Ridge National Laboratory	R. A. Lawson	9-28-92

ORNL/CON-335

330
96

Alternative Non-CFC Mobile Air Conditioning

By

V. C. Mei, F. C. Chen and D. M. Kyle
Energy Division
Oak Ridge National Laboratory

Prepared for
Office of Transportation Technologies
U.S. Department of Energy

September 1992

Prepared by the
OAK RIDGE NATIONAL LABORATORY
Oak Ridge, Tennessee 37831
managed by
MARTIN MARIETTA ENERGY SYSTEMS, INC.
for the
U.S. DEPARTMENT OF ENERGY
under
Contract No. DE-AC05-84OR21400

MARTIN MARIETTA ENERGY SYSTEMS LIBRARIES
3 4456 0362925 0

TABLE OF CONTENTS

LIST OF FIGURES v
LIST OF TABLES vii
ACKNOWLEDGMENTS ix
ABSTRACT xi

1. INTRODUCTION 1

2. LITERATURE SEARCH 5

3. MAC COOLING LOAD 9

4. ALTERNATIVE REFRIGERANTS 13
   4.1 R-134a 13
   4.2 TERNARY BLENDS 13
   4.3 OTHER REFRIGERANT BLENDS 14
   4.4 NON-INERT (FLAMMABLE) REFRIGERANTS 14

5. NON-CFC ALTERNATIVE MAC SYSTEMS 15
   5.1 WORK ACTUATED MAC SYSTEMS 15
      5.1.1 Refrigerant Vapor Compression Cycle: Hermetic Systems 15
      5.1.2 Reversed Brayton Air Cycle 17
      5.1.3 Rotary Vane Compressor Air Cycle 20
      5.1.4 Thermoelectric Cooling System 21
      5.1.5 Stirling Cycle Cooling System 24
   5.2 COMPARISON OF WORK-ACTUATED MAC SYSTEMS 25
   5.3 HEAT ACTUATED MAC SYSTEMS 26
      5.3.1 Ejector Cooling System 26
      5.3.2 Absorption Cooling System 28
      5.3.3 Adsorption Cycle (Desiccant) Cooling System 31
      5.3.4 Metal Hydride Cooling System 35
   5.4 COMPARISON OF HEAT-ACTUATED MAC SYSTEMS 39

6. RECOMMENDATIONS FOR FUTURE MAC RESEARCH AND DEVELOPMENT 41
   6.1 NEAR-TERM R&D 41
   6.2 MID-TERM R&D 41
   6.3 LONG-TERM R&D 41

7. CONCLUSIONS 43

8. REFERENCES 45

TABLE OF CONTENTS (continued)

APPENDIX A - COMPUTER CODE FOR BRAYTON CLOSED AIR CYCLE AND SAMPLE INPUT DATA 49

APPENDIX B - ORNL MATHEMATICAL MODEL FOR TE MAC SYSTEM 55

APPENDIX C - ORNL COMPUTER CODE FOR EJECTOR COOLING SYSTEM 69

APPENDIX D - SAMPLE CALCULATION OF A METAL HYDRIDE COOLING SYSTEM 79

LIST OF FIGURES

1. Electric compressor drive system 16

2a. Schematic of Brayton open-cycle system 17

2b. Pressure-volume diagram of Brayton air cycle 18

2c. Schematic of regenerative Brayton closed-cycle system 18

2d. Temperature-entropy diagram of regenerative Brayton closed-cycle system 19

3. ROVAC mobile air conditioning system 20

4a. Schematic of thermoelectric mobile air conditioning system 22

4b. Schematic of thermoelectric liquid-air heat exchanger 22

4c. Coefficient of performance of thermoelectric mobile air conditioning system 23

5. Schematic of Stirling mobile air conditioning system 24

6a. Schematic of ejector cooling system 26

6b. Schematic of ejector mobile air conditioning system in engine cooling and air conditioning mode 27

7. Schematic of single-stage absorption cooling system 29

8. Absorption system cooling capacity vs car speed 30

9. Schematic of truck absorption refrigeration system 30

10. Schematic of truck absorption refrigeration system components 31

11. Schematic of closed-cycle desiccant mobile air conditioning system 33

12a. Schematic of desiccant mobile air conditioning component arrangement 34

12b. Schematic of desiccant bed design 34

13. Adsorption isotherms of typical desiccant materials 35

14a. Schematic of metal hydride cooling system, regeneration mode 36

14b. Schematic of metal hydride cooling system, absorption mode 36

LIST OF FIGURES (continued)

14c. Pressure-temperature diagram of metal hydride cooling system 36

15. Schematic of metal hydride mobile air conditioning system for hydrogen-fueled vehicle 37

16. Hydriding alloy 38

LIST OF TABLES

1. GWPs for fluorocarbons and other trace greenhouse gases 2

2. Predicted automotive cooling load requirements 9

3. Typical glazing characteristics 9

4. Window arrangements 10

5. Comparison of calculated ΔTs. 11

6. Performance comparison of alternative refrigerants 14

7. Reversed Brayton cycle mobile air conditioning calculated performance 19

8. Calculated and actual measured performance data of ROVAC model 30B/45/9.5-4 ... 21

9. Thermoelectric mobile air conditioning coefficient of performance as a function of cooler inlet heat transfer fluid temperature 23

10. Calculated performance of Stirling Thermal Motor STM4-35 SAC model Stirling mobile air conditioning system 25

11. Comparison of work-actuated mobile air conditioning systems 25

12. Comparison of conventional mobile air conditioning and ejector mobile air conditioning 28

13. Summary of advanced absorption cycle analyses for 80,000-Btu/h output 32

14. Comparison of heat actuated-mobile air conditioning systems 39

ACKNOWLEDGMENTS

The authors are indebted to Rogelio Sullivan, Office of Transportation Technologies, Department of Energy, for his support of this effort. The authors are also grateful to Richard W. Murphy for providing the computer codes for the Brayton cycle cooling systems and ejector cooling systems work. Finally, we would like to thank Donna Penland for her skill and patience in preparing the manuscript.

ABSTRACT

Concern about the destruction of the global environment by chlorofluorocarbon (CFC) fluids has become an impetus in the search for alternative, non-CFC refrigerants and cooling methods for mobile air conditioning (MAC). While some alternative refrigerants have been identified, they are not considered a lasting solution because of their high global warming potential, which could result in their eventual phaseout. In view of this dilemma, environmentally acceptable alternative cooling methods have become important. This report, therefore, is aimed mainly at the study of alternative automotive cooling methodologies, although it briefly discusses the current status of alternative refrigerants.

The alternative MACs can be divided into work-actuated and heat-actuated systems. Work-actuated systems include conventional MAC, reversed Brayton air cycle, rotary vane compressor air cycle, Stirling cycle, thermoelectric (TE) cooling, etc. Heat-actuated MACs include metal hydride cooling, adsorption cooling, ejector cooling, absorption cycle, etc. While we are better experienced with some work-actuated cycle systems, heat-actuated cycle systems have a high potential for energy savings with possible waste heat applications. In this study, each alternative cooling method is discussed for its advantages and its limits.

1. INTRODUCTION

While mobile air conditioning (MAC) is still an optional item, its market share has reached 90% in passenger cars and 70% in light trucks in North America. It is estimated that MAC accounts for over 30% of all R-12 consumption in Japan (Ushimaru 1989) and 33% in the United States (Statt 1988). MAC accounts for about 20 gal. of fuel per 10,000 miles driven in the U.S. (Halberstadt 1991). There are about 184.4 million passenger vehicles in the U.S. (Davis and Hu 1991) with an annual driving average of 10,119 miles per car. With 90% of these equipped with MAC systems, annual fuel consumption will be close to 1.68 billion gal of refined fuel if MAC is used for half of the annual mileage driven. Efficient MAC systems, judging from the above figures, are needed. There is also a significant potential for growth in the MAC field as the use of private cars and trucks becomes more common in Asia, Africa, and South and Central America.

Because of the scheduled phaseout of R-12 by the year 2000 (*Montreal Protocol* 1987), MAC alternative refrigerants and cooling methods are urgently needed. While R-134a has been identified as the likely replacement for R-12, it is basically for new car models only. For existing cars, some nonazeotropic refrigerant mixtures have been identified as suitable alternatives. The existing MAC alternative refrigerants may only be short-term solutions, however, because of their high global warming potential (GWP). Table 1 shows the lifetime equivalent CO_2 emissions for the MAC 500-year GWP (Fischer et al.). The table indicates that the GWP of R-134a is about 420 times higher than that of CO_2. Either a different class of refrigerants or alternative cooling technologies, both of which are environmentally safe, will be needed.

A literature search for MAC-related research and development (R&D) work for the past 20 years was performed to look into the history of MAC evaluation. The search provides some intriguing information that indicates that novel alternative MAC cooling technologies were never seriously studied, despite the high potential for saving energy for some of the concepts, and that most of the work was performed before 1985. Since 1987, almost all MAC R&D work was related to R-12 replacement refrigerants because of the Montreal Protocol. A vigorous and massive effort that investigated MAC alternative refrigerants, material compatibility, lubricant oils, and redesigns of the major MAC components, etc., indicates that MAC industry is racing with time to come up with an environmentally acceptable MAC system with performance comparable to or better than conventional MAC systems before the year 2000. Alternative cooling technologies have more or less been abandoned for the time being, even though they have the potential to provide environmentally sound energy saving MAC systems. In this study, the recent development of MAC with alternative refrigerants and of some promising alternative cooling technologies, both work-actuated and heat-actuated, are discussed in detail.

For alternative refrigerants, R-134a has been identified as the most promising replacement for R-12 in this report. The technical problems facing R-134a in retrofitting existing cars are discussed. Some nonazeotropic refrigerant mixtures, such as the ternary blends, are discussed for their advantages and limits in retrofitting the existing cars.

Alternative MAC cooling methods are generally divided into work-actuated and heat-actuated systems. Work-actuated systems are those actuated by engine shaft power or electricity generated through the vehicle electric generating system. Promising work-actuated MAC systems include hermetic cooling systems, reversed Brayton air cycle, rotary-vane compressor air cycle, Stirling cycle,

Table 1. GWPs for fluorocarbons and other trace greenhouse gases[a]

Trace gas[b]	Estimated lifetime (years)	Global warming potential (GWP) integration time horizon[c] (years)	
		100	500
Carbon dioxide		1	1
Nitrous oxide	150	290	190
Methane - indirect	10	21	9
CFC-115	400	6900	7400
CFC-114	200	6900	5500
CFC-12	130	7300	4500
CFC-113	90	4200	2100
CFC-11	60	3500	1500
HCFC-143A	41	2900	1000
HCFC-125	28	2500	860
HCFC-142b	19	1600	540
HCFC-134a	16	1200	420
HCFC-22	15	1500	510
HCFC-141b	8	440	150
HCFC-124	6.6	430	150
HCFC-152a	1.7	140	47
HCFC-123	1.6	85	29
CF_3Br	110	5800	3200
CCl_4	50	1300	3200
CH_3CCl_3	6	100	34

[a] Fischer, S. K., et al., *Energy and Global Warming Impacts of CFC Alternative Technologies,* AFEAS/DOE report, sponsored by the Alternative Fluorocarbon Environmental Acceptability Study and the U.S. Department of Energy, Dec. 1991.

[b] Chlorofluorocarbons (CFCs) and other gases do not include effects through depletion of stratospheric ozone.

[c] Changes in lifetime and variations of radiative forcing with concentration are neglected.

TE cooling, etc. Even though we are well versed in some work-actuated systems, such as hermetic systems, which have been routinely used for residential applications, some technical challenges remain when these systems are used for automotive cooling applications. Each one of them is discussed for its merits and for technical obstacles to be overcome. Because of the possibility of waste heat application for heat actuated MAC cooling systems, their energy saving potential is very good. However, research and development work in this type of MAC is very rare, which presents a great challenge in technology assessment and potential development. In this study, ejector cooling, adsorption (desiccant) cooling, absorption cooling, metal hydride cooling, etc., are identified as the potential candidates for MAC applications. Each one has unique features and technical limits that are discussed in this study. Some information on previous work that can be applied to MAC, such as the Oak Ridge National Laboratory (ORNL) computer codes for ejector cooling, the reversed Brayton cycle, and the mathematical model for the thermoelectric (TE) MAC system, is included in the appendices.

2. LITERATURE SEARCH

A literature search was performed on MAC systems from 1970 to 1990, and 184 articles were identified. Personal contacts, however, proved to be a rich resource for updated information. This search was aimed at finding past work on alternative refrigerants for R-12 and alternative cooling methodologies for MAC systems.

Spauschus (1988) studied the compressor and refrigeration system requirements and information gaps for R-134a application as an R-12 substitute. His main concerns were the chemical stability of R-134a, the lack of a reliable detection method for low concentrations of R-134a, and its solubility with lubricants. A paper by Bivens et al. (1989) discusses in detail the use of ternary blends, such as R-22/R-152a/R-124 (or R-114), as MAC refrigerants. These authors claim that all refrigerants used in the blends are commercially available and that the thermodynamic properties of the blends are close to those of R-12. However, they also mention that the blends are not a drop-in type of R-12 replacement. In fact, some modifications are needed in retrofitting the existing cars, and they could be quite costly (Dieckmann and Bentley). While the report by Dieckmann and Bentley mainly discusses the cost of retrofitting existing cars with R-134a refrigerant, it suggests some component changes that are applicable to the ternary blends as well. An article by Bateman (1989) discusses the transport and thermodynamic properties of R-134a that require special attention. He concludes that a significant amount of development work and system redesign will be required to optimize the use of R-134a for MAC. A more recent paper by Bateman (1990) presents the status of R-134a for MAC. In this study, the environmental impact, refrigerant properties, heat transfer, refrigeration performance, material compatibility, and lubricants for R-134a are discussed in detail.

El-Bourini, Hayashi, and Adachi (1990) investigated MAC performance with R-134a. These authors' finding was that the serpentine condenser needed to be changed to a parallel-flow condenser. Provost and Arrieta (1990) studied the differences between R-12 and R-134a in MAC, which led to new methods of presenting refrigerant data by using computer graphics technology. A paper written by Bateman et al. (1990) discusses the field test results of the ternary blends used for MAC. These authors summarize the requirements for retrofit of the ternary blends to existing vehicles. Struss, Henkes, and Gabbey (1990) experimentally studied both serpentine and parallel condensers for R-12 and R-134a. They found that R-134a generated a higher head pressure. Improvement of condenser performance and refrigerant expansion devices could reduce head pressure for R-134a. El-Bourini, Adachi, and Tajima (1991) experimentally investigated the effect of an expansion valve on R-134a MAC system. They found, from wind tunnel and road tests, that better cooling performance and similar discharge pressures at a lesser refrigerant charge of R-134a could be achieved with a new expansion valve and parallel-flow condenser than with conventional R-12 MAC systems.

Guntly (1990) investigated the use of R-22 as a MAC refrigerant. He concluded that R-22 would not degrade MAC system performance and would require the same level of redesign required by R-134a. It is clear that most MAC alternative refrigerant studies were done after 1988, which shows that alternative refrigerants for MAC were vigorously investigated only after the Montreal Protocol called for the scheduled phaseout of R-12 and some other CFC fluids by the year 2,000.

Bessler and Forbes (1987) studied an electrically driven hermetic MAC system with a brushless dc motor. While their system could reduce refrigerant leakage from the compressor shaft seal, its main purpose was to save energy. Because of the smaller car engines currently used for better mileage, an electrically driven MAC system with variable-speed capability could achieve continuous

control of cooling output independent of the engine drive belt. This design could outperform an MAC system with mechanically controlled compressor displacement. Akabane et al. (1989) evaluated an electrically driven hermetic MAC system with a scroll compressor. They found that the system coefficient of performance (COP) was not as high as that of conventional MAC systems. Extensive change in vehicle electrical system is also needed. A paper by Ikeda, Yashii, and Tamura (1990) discusses a hermetic MAC system for electric vehicles. All findings indicated that for a hermetic electrically driven MAC to work, vehicle cooling load would have to be reduced through window glazing and reduction of fresh air intake. A report prepared by Garrett, Inc., (1977) discussed the possible application of the Brayton air cycle for MAC operation. With realistic assumptions, the COP of a Brayton open air cycle system is around 1.0, which is low compared with that of conventional MAC systems. Brayton air cycle systems have been routinely used for aircraft air-conditioning purposes due to their light weight and compactness (*ASHRAE HVAC Application Handbook* 1991). The rotary vane compressors air cycle (Edwards 1975) employs a rotary van type compressor for air compression and expansion that could be used for MAC. However, little attention has been paid to this cycle by most researchers because of its high power consumption.

There are many publications about the application of TE cooling, but few of them are for MAC. Stockholm, Pujol-Soulet, and Sternat (1982) experimentally investigated TE cooling for a passenger railway coach because of this cooling system's low maintenance requirement. Because of the lack of a major breakthrough in TE materials for the past 30 years or so, the efficiencies of TE cooling systems remain low. Mathiprakasam et al. (1991) studied TE cooling for MAC. Their findings indicate that a TE MAC system could achieve a COP of only 0.43, which is much lower than those of conventional MAC systems.

Lowi (1975) obtained a patent for an ejector MAC system powered by engine waste heat, and he discusses the basic principles of the system in his patent. A paper by Balasubramaniam et al. (1976) extends Lowi's study in indicating that more than 70% of MAC energy consumption could be saved by using this novel concept. A paper by Lowi et al. (1977) emphasized the potential benefits of a lightweight waste-heat-operated ejector MAC system. Hamner (1981) wrote a paper discussing the application of an ejector MAC system with detailed modeling of the ejector. The advantages, limitations, and recommendations for future research and development are given.

Akerman (1971) experimentally investigated the suitability of absorption refrigeration cycles for use in MAC systems. He found that the absorption cycle heat rejection rate is about 2.5 to 3.5 times as large as that of a vapor compression cycle. Charters and Megler (1974) studied the feasibility of an absorption MAC. Their conclusion was that the main problem is selecting the proper refrigerant and absorbent. Ballaney, Grover, and Kapoor (1977) considered absorption MAC feasible. Their study indicates that lithium bromide/water absorption systems provide better results than ammonia/water systems. Data Analysis, Inc., (1980) developed a conceptual absorption MAC model but failed to develop a prototype absorption MAC system. Mei, Chaturvedi, and Lavan (1979) studied truck absorption refrigeration systems and concluded that absorption MAC is probably not feasible for passenger cars because there would not be enough waste heat but that it is feasible for long-haul trucks. A conceptual system design is presented in their paper. Jackson (1987) did a feasibility study of a vehicle waste-heat-operated absorption system. He concluded that the system he analyzed was not feasible because of the high temperature of the engine waste heat, which inhibited the removal of heat from the evaporator. Schaetzle (1982) investigated the solid desiccant adsorption MAC system coupled with waste heat desiccant regeneration. Molecular sieve was selected as the desiccant material. A conceptual design and some preliminary tests on the refrigerant

and the desiccant were conducted, and a prototype system for a truck was constructed with limited test results. Schaetzle's study claims that up to 50% of MAC energy could be saved by his proposed MAC.

Horowitz, Nelson, and Bloomquist (1979) studied a hydrogen conversion and storage system that could be used for MAC, and they present a conceptual system design in their paper. Bernauer and Buchner (1982) looked into a metal hydride heat pump cycle for MAC. Ron, Kleiner, and Navan (1984) hold a patent on the metal hydride MAC concept. This so-called "hydrogen heat pump" was driven by vehicle waste heat. Kreger (1978) patented a Stirling automotive heat pump driven by engine waste heat. However, no follow-up publication surfaced. Stirling Thermal Motor (Chen 1991) looked into a Stirling MAC system. A variable displacement Stirling engine was developed and demonstrated that could lead to the application of the Stirling cycle to MAC. Nartron Corp. (1991) has issued a newsletter about a novel MAC system featuring a compact, variable-speed, two-stage, electrically driven turbine compressor that uses a new low-pressure non-CFC refrigerant. The company claims that the COP of the proposed system would be 30% higher than that of conventional MAC systems.

Most novel MAC concepts, particularly those of heat-actuated systems, were published before 1985, which indicates that because of low fuel cost novel MAC concepts have not been seriously investigated.

3. MAC COOLING LOAD

Several studies of automobile cooling loads have appeared in the literature. Ruth (1975) experimentally validated a simple cooling load model which he derived. His model was used to predict cooling loads for typical subcompact, compact, and standard cars at various temperatures and relative humidities (RHs). Tables 2 and 3 show several of his results.

Table 2. Predicted automotive cooling load requirements

Car type	Ambient condition (°F/RH)	City driving (cool down) no outside air (Btu/h)	City driving 30 mph 100% outside air (Btu/h)	Highway driving 60 mph 100% outside air (Btu/h)
Subcompact	90/50%	12,250	11,910	12,850
	100/20%	11,830	10,930	11,640
	110/ 5%	13,170	12,950	13,940
Compact	90/50%	14,140	14,220	14,120
	100/20%	13,680	12,840	12,730
	110/ 5%	15,100	15,380	15,280
Standard	90/50%	17,270	17,620	17,520
	100/20%	16,770	15,830	15,730
	110/ 5%	18,320	18,950	18,850

Table 3. Breakdown of heat load[a]

Load	Value (Btu/h)	% of Total Load
Solar	4470	34.8
Conductive	1770	13.6
Fresh Air	5400	42.0
Passenger	1000	7.8
Instrument	200	1.6
TOTAL	12840	100.0

[a]Ruth, 1975.

Ruth also applied his load model to the case where tinted windows are used to reduce solar load, and to the case of reduced ventilation while the car is moving. His conclusions show that these measures can significantly reduce the air conditioning cooling load.

Shimizu et al. (1982) have developed a load model which is somewhat more detailed than Ruth's model. They consider the effects that radiative heat transfer processes have on heat entering the vehicle across the roof, doors, and glass. The surface radiation properties that were used were obtained directly from laboratory experiments. They found that heat entering through the roof can account for 28% of the heat which enters a sedan that is parked in direct sunlight, the remaining 72% being due to glass transmittance. When the vehicle is moving, the forced ventilation load can account for 51% of the cooling load, but with minimum outdoor air can be reduced to 12%. Their transient simulations showed that immediately after starting the car, the heat stored during hot soak can account for 75% of the instantaneous cooling load.

Sullivan and Selkowitz (1988) utilized a building thermal-load model called "ESP" which they adapted for automobile load analysis. Their study concentrated on the relative effects of the three radiative properties for glass: absorptance, reflectance, and transmittance, during various hot-soak conditions. Their calculations did not extend to moving vehicles. They concluded that if transmittance is reduced by increasing the reflectance, then internal temperatures can be greatly reduced. If the transmittance is reduced by increasing absorptivity, then the glass will heat up and in turn heat the car, thus limiting the potential for reducing the hot-soak temperature.

Dieckmann and Mallory (1990) composed a numerical model which was very similar in scope to that of Shimizu et al. One significant difference was that their treatment of transient loads was implicit — the user must prescribe the actual rate of cooling — whereas Shimizu et al. treated the transient case explicitly by solving the time-dependent differential equations. Dieckmann and Mallory used the model to simulate a number of load-reducing measures including wavelength-selective glazing, roof and other insulation, ventilation during hot soak, and electrochromic glazing.

Finally, we note that the essential heat transfer processes that are involved in determining the stationary hot soak temperature of an automobile are relatively few in number. The following over-simplified load model illustrates this by considering one representative car body, and by exploiting some of the results of the above authors.

When the car is stationary and positioned in direct sunlight, Shimizu et al., among others have found that heat enters the car by transmission through the body glass, and by conduction through the roof. We denote these heating rates as Q_{glass} and Q_{roof}, respectively. The rate of heat leaving the interior, Q_{body}, is due to conduction across the various body surfaces *except for* the roof. Under steady state hot-soak conditions,

$$Q_{body} = Q_{roof} + Q_{glass} \tag{1}$$

Representative values for Q_{glass} can be found using the "sports model sedan" configuration considered by Sullivan and Selkowitz (1988). The solar loads are calculated using standard formulas (see ASHRAE Fundamentals, 1989). Table 4 summarizes the calculations made for June 21, at 30°N latitude, at 12 o'clock noon.

Table 4. Window arrangements[a]

	Area (ft^2)	Angle (deg)	Radiation transmittance, Btu/(h-ft^2)	Heat transfer (Btu/h)
Front	12.3	31	265	3,260
Rear	20.3	19	300	6,090
Side	8.42	57	150	1,263
			Total	10,613

[a]Sullivan and Selkowitz, 1988.

The heat transfer result, Q_{glass}, is based on a total glass transmittance $\tau_g = 0.83$. For any other τ_g, Q_{glass} can be calculated by the following correlation:

$$Q_{glass} = 10{,}613\ (\tau_g/0.83) \quad . \tag{2}$$

Regarding Q_{roof}, the value calculated by Shimizu et al. for a dark colored sedan under similar outdoor conditions may be used as a representative value:

$$Q_{roof} = 1{,}706 \text{ BTU} \quad . \tag{3}$$

The heat loss rate Q_{body} may by calculated by using the correlation,

$$Q_{body} = C\,\Delta T \quad , \tag{4}$$

where ΔT is the difference in temperature between ambient air and the car interior, and C is a constant which depends only on the car body configuration. For the "sports model sedan" represented in Table 4, Sullivan and Selkowitz found that $\Delta T = 32°C$. Combining eqs. 1–4, and solving for C, we find that for this particular car, C = 385 BTU/h - °C. Now, for any τ_g, the hot soak temperature difference ΔT is given by

$$\Delta T = \frac{1{,}706 + 10{,}613\,(\tau_g/0.830)}{385} \quad . \tag{5}$$

Equation (5) predicts to within 8% the ΔT calculated by Sullivan and Selkowitz for the range $0.23 < \tau_g < 0.83$ for the "sports model sedan."

Finally we note that in Eq. (5) τ_g can be replaced by an "effective transmittance," that is, the fraction of incident radiation reaching the car interior. This is useful in estimating the cooling effect of window shades, for example.

4. ALTERNATIVE REFRIGERANTS

Several alternative refrigerants have been identified as potential R-12 replacements. Some of these are

- R-134a for new cars;
- ternary blend R-22/R-152a/R-114 (or R-124) for retrofit;
- other blends, such as R-22/R-142b and R-22/R-124; and
- non-inert refrigerants, such as R-152a and propanes.

4.1 R-134a

R-134a has many advantages as an R-12 replacement. Its thermodynamic properties are close to those of R-12. Most importantly, it does not contain chlorine, so it will not deplete the ozone. The global warming effect of R-134a is very low compared with that of R-12, and its toxicity (short-term) is also low. However, some changes are required when R-134a is used, such as changes in the oil and desiccant. A list of MAC changes for R-134a follows:

- A parallel flow condenser is needed.
- The thermal expansion valve needs to be changed.
- An oil - polyalkylene glycol (PAG) oil - is needed.
- The desiccant has to be changed from 4A-XH-5* to 4A-XH-7*.
- Nylon lined hoses are needed.

R-134a has also been considered as the refrigerant for retrofitting purposes. While the retrofit could be done technically, the cost at this time could be prohibitively high. The following items are some of the major concerns in using R-134a to retrofit MAC.

- The discharge pressure with R-134a is about 30-40 psi higher than with R-12 if condenser and expansion devices are not changed.
- The refrigerant cost is high ($5.00 per lb).
- The cost of changing refrigerant hoses alone (if the old hoses are not nylon inner-lined) will be around $200 to $300 (Dieckmann and Bentley).
- The existing system must be thoroughly flushed and cleaned to avoid the decomposition of PAG oil.
- The desiccant must be changed at a cost of around $80.

4.2 TERNARY BLENDS

Ternary blends are mixtures of three refrigerants (R-22/R-152a/R-114 or R-124) that have been tested extensively as alternatives to R-12 (Bivens et al. 1989, Bateman et al. 1990). The ternary blends have the following advantages:

---

*Product part number of UOP, Inc.

- Their thermodynamic properties are very close to those of R-12.
- They are nearly azeotropic mixtures.
- There is no oil incompatibility problem.
- Ternary blends have low ozone depleting power and low global warming effects compared with R-12.
- The refrigerants in the blends are all commercially available.
- Ternary blends performance is almost at the R-12 level.

The ternary blends are not drop-in replacements for R-12 MAC systems, however. There are some concerns about the ternary blend retrofitting of MAC:

- The blends could become flammable if R-22 leaks out to a certain level.
- On-site recycling of the blends could be difficult.
- Changing of nitrile hoses to hoses inner-lined with nylon is expensive unless nylon hoses are already in use.
- Desiccant change from UOP, Inc. product part number XH-5 to XH-9 is needed.
- Nitrile elastomer change is needed.

4.3 OTHER REFRIGERANT BLENDS

There are some other binary blends that can be considered as alternatives to R-12, such as R-22/R-124 and R-22/R-142b (Radermacher and Lavelle 1989). The former mixture was patented by Allied-Signal, Inc., which for the time being is not taking any action with this blend. The test results for R-22/R-142b indicate thermal breakdown on the parts (ARI 1991), which could be caused by not using a proper lubricant oil. Little work has been done recently on this blend.

4.4 NON-INERT (FLAMMABLE) REFRIGERANTS

Some non-inert refrigerants, such as R-152a and propanes (Arthur D. Little 1991) could be excellent R-12 replacements. R-152a, for example, has no ozone depleting power, and its global warming effect is even smaller than that of R-134a. The calculated system thermal efficiencies of R-152a are higher than those of R-12. However, concerns about car safety have more or less excluded replacements like these from any further work other than paper studies. Table 6 shows some performance data for the potential R-12 alternative refrigerants (Mei 1991).

Table 6. Performance comparison of alternative refrigerants[a]

Refrigerant	COP[b] (theoretical)	COP (compressor)	COP (system)	Weight (kg)
CFC-12	3.64	2.23	1.90	18.1
HFC-134a	3.54	2.16	1.84	18.1
HFC-134a (enhanced)	3.54	2.40	2.04	unknown
Ternary blends	3.66	2.17	1.84	18.1
HFC-152a	3.68	2.34	1.87	unknown

[a]*Source:* Halberstadt, M., and Dieckmann, J. et al. (see reference list)
[b]Coefficient of performance

5. NON-CFC ALTERNATIVE MAC SYSTEMS

The alternative MAC systems can be divided into work-actuated and thermal energy powered, or heat-actuated, systems. The work-actuated systems include conventional MAC units, air cycle systems, TE cooling systems, and Stirling cycle systems. Heat-actuated systems include metal hydride systems, desiccant MAC, ejector MAC, and absorption systems. We are well versed in some of the work-actuated MAC systems, such as the hermetic MAC system. Heat-actuated systems, however, have an important feature in that it is possible to use automotive waste heat as the heat source to power such systems, which could save up to 70% of the energy consumed, according to some analyses (Lowi 1975). Most of these systems do not use CFC fluids, which means they are environmentally acceptable. With the possible phaseout of R-134a in the future because of its global warming effect, and with the potential of alternative systems for saving energy, R&D work on alternative MAC methodologies is becoming very important. The following MAC operating conditions and compressor efficiency are assumed as a base for comparing different work-actuated systems:

Car interior temperature:	77°F and 60% RH
Ambient air temperature:	100°F.
Refrigerant exit temp. (condenser):	150°F, subcooled to 140°F.
Refrigerant exit temp. (evaporator):	40°F, superheated to 50°F.
Compressor efficiency (isentropic):	0.7.
Thermoelectric material properties:	Seebeck coefficient: 1.8 (2T + 1985) 10^{-7} V/°C; electrical resistance: (6T + 1735) 10^{-6} ohm/cm; thermal conductivity: 0.0324 W/cm/°C.

5.1 WORK ACTUATED MAC SYSTEMS

5.1.1 Refrigerant Vapor Compression Cycle: Hermetic Systems

Hermetically sealed MAC systems minimize refrigerant leakage. However, most previous studies of this type of MAC systems focused on high energy efficiency. Recent efforts to improve fuel efficiency have resulted in smaller automobile engines. The air-conditioning load from a cycling fixed-displacement compressor can significantly affect vehicle drivability and performance with small engines. Variable-displacement compressor MAC systems were developed to remedy this problem. A paper by Bessler and Forbes (1987) discusses the application of dc motors to hermetically sealed MAC systems. Their system uses a variable-speed brushless dc motor to drive a fixed-displacement compressor, thus achieving continuous control of cooling output. Compared with variable-displacement systems, the electrically driven MAC provides the following additional benefits:

- A hermetic motor/compressor assembly means no shaft seal refrigerant leakage.
- The compressor is smaller and less complex.
- The packaging is more flexible (no drive belt).
- Full cooling capacity can be achieved at any engine speed.
- Conditioned air temperature can be controlled without reheat.
- Hermetic MAC can easily be installed on electric cars.

Two 5-hp brushless dc motors were developed with maximum operating speeds of 6000 and 7000 rpm. The researchers found that in order to reduce the system power consumption to a reasonable level, fresh air intake had to be limited to around 30%. A 2-hp motor was considered a reasonable choice with a cooling capacity of about 1.5 ton, which is more efficient than conventional MAC at around 1.9 hp/ton. The electrical MAC system needs at least 48 V of dc to drive the motor. Since the efficiency of the alternator is a direct multiplier on the electric MAC system efficiency, its design is critical, and it must be at least 75% efficient to allow the electric drive to match the efficiency of conventional belt-drive systems. This study indicated that the hermetic MAC system would require a control strategy, compressor, and electrical system that are different from those used in today's automobiles.

Akabane et al. (1989) and Ikeda et al. (1990) discuss a MAC system using a hermetically sealed electrical air-conditioning system with a variable-speed scroll compressor coupled with a brushless dc motor for electric vehicles. Instead of using the engine to measure the power requirement, the researchers designed a test stand to drive either an open end compressor or an alternator. The car was tested in an environmental chamber. Figure 1 shows the function blocks of the electric compressor drive system. A high-performance condenser with a 75% higher coefficient of total heat transfer was used to replace the original condenser. The test results showed that even with the heat flux reduction and the change of condenser, the total efficiency of 39.9% was lower than that of the baseline case (conventional system) of 67%. The electric MAC also has a COP of 1.53, which is lower than the baseline COP of 1.81.

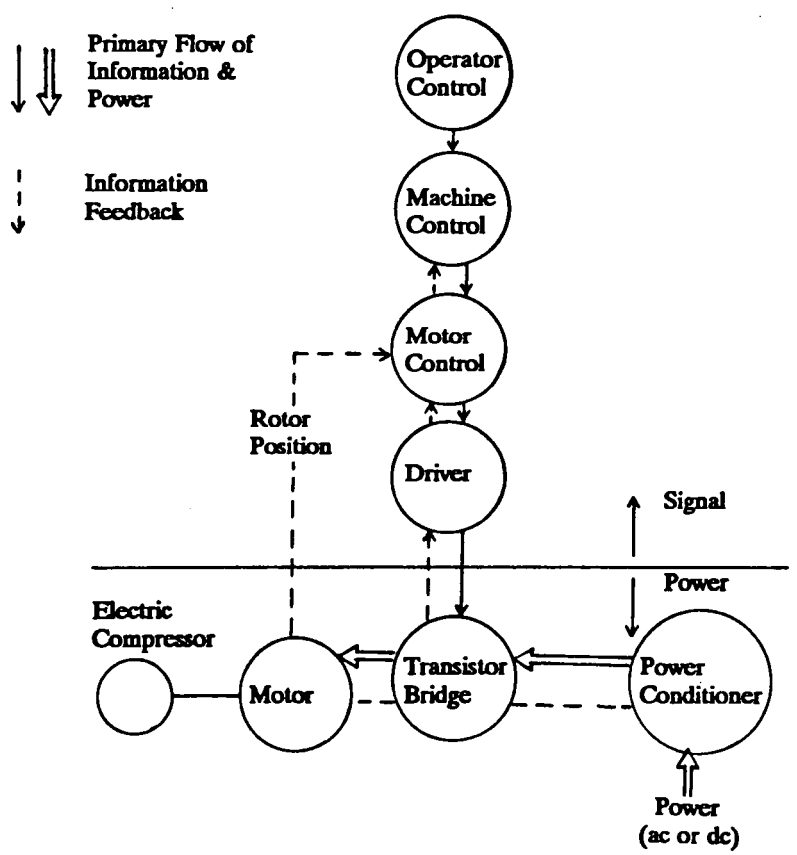

Fig. 1. Electric compressor drive system.

These studies indicate that limiting fresh air intake and reducing cooling load (e.g., by means of window glazing) would be necessary for electrically driven MAC. Substantial modifications on the electrical system are also needed.

A recent newsletter by Nartron Corp. (1991) makes claims for a novel, hermetically sealed MAC system with an electrically driven turbine compressor coupled with a DuPont low-pressure non-CFC refrigerant. The system is compact and variable-speed. The newsletter further claims that the system has a COP about 30% higher than that of conventional R-12 and R-134a MAC systems.

Based on the assumed operating conditions, the hermetic MAC COPs for R-134a and R-22 can be easily calculated at around 2.25 and 2.15, respectively. R-22 will have about 15% more cooling capacity and will be operated close to 400 psia discharge pressure, versus R-134a operation at around 278 psia.

5.1.2 Reversed Brayton Air Cycle

Brayton air cycle air-conditioning systems are commonly used on aircraft because of their light weight, compact size, and the readily available bleed air. Figures 2a and 2b show schematics of a reversed Brayton open-air cycle. The air from the passenger compartment is sucked into a turbine and then expanded, which lowers the air temperature. The cold air exchanges heat with ambient air, and the cooled ambient air is then delivered to the passenger compartment. The warmed air at low pressure is compressed above ambient atmospheric pressure and vented. The turbocompressor would operate at approximately 60,000 rpm, so it would be difficult to drive directly from the automobile engine. The American Society of Heating, Refrigerating and Air-Conditioning Engineers (ASHRAE) Applications Handbook (1991) discusses the basic air cycle, the bootstrap cycle, and the basic three-wheel bootstrap air cycle.

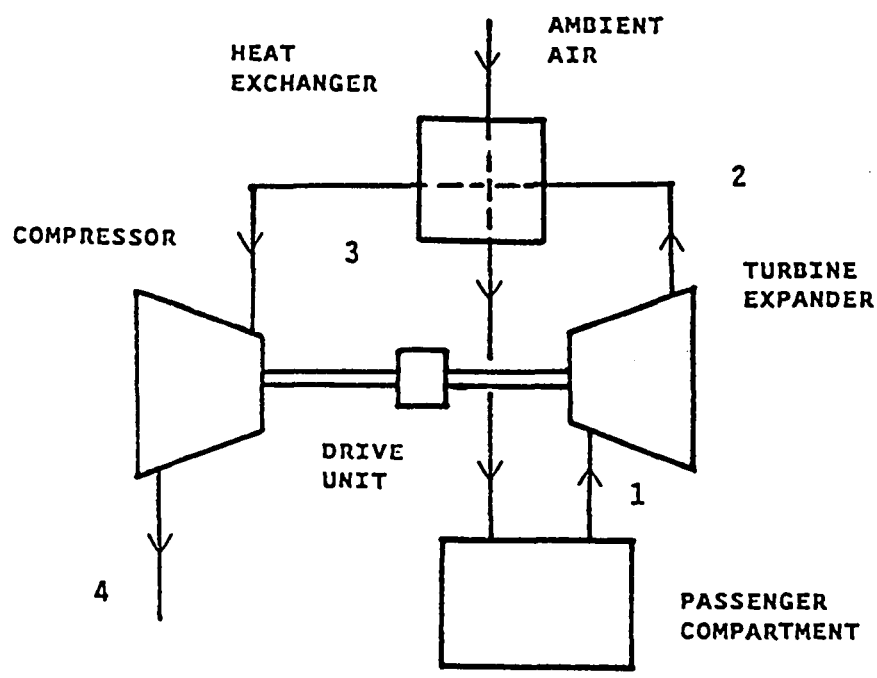

Fig. 2a. Schematic of Brayton open-cycle system.

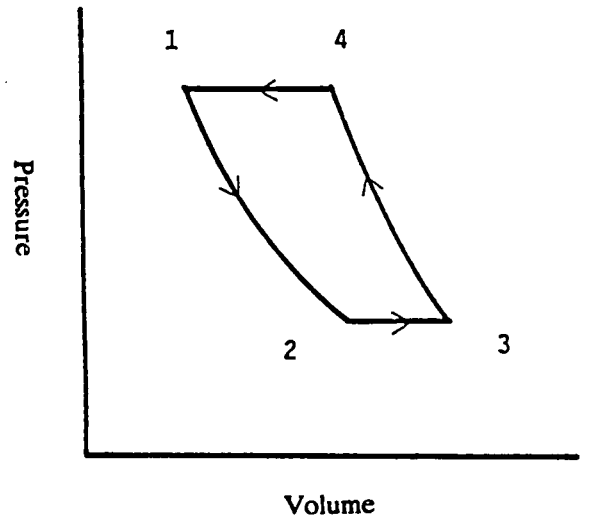

Fig. 2b. Pressure - volume diagram of Brayton air cycle.

The engineering staff of Garrett (1977) also made a study of various kinds of MAC systems. In their Brayton cycle study, they concluded that the MAC system COP was around 1.04. For real applications, a closed Brayton air cycle system with a regenerator is probably more efficient than a simple open cycle. Appendix A shows the ORNL computer code of a Brayton closed air cycle with a regenerator, which can be used to calculate the performance of such a cycle. Based on Figs. 2c and 2d and the following assumptions, two cases were calculated with this computer code at the following conditions.

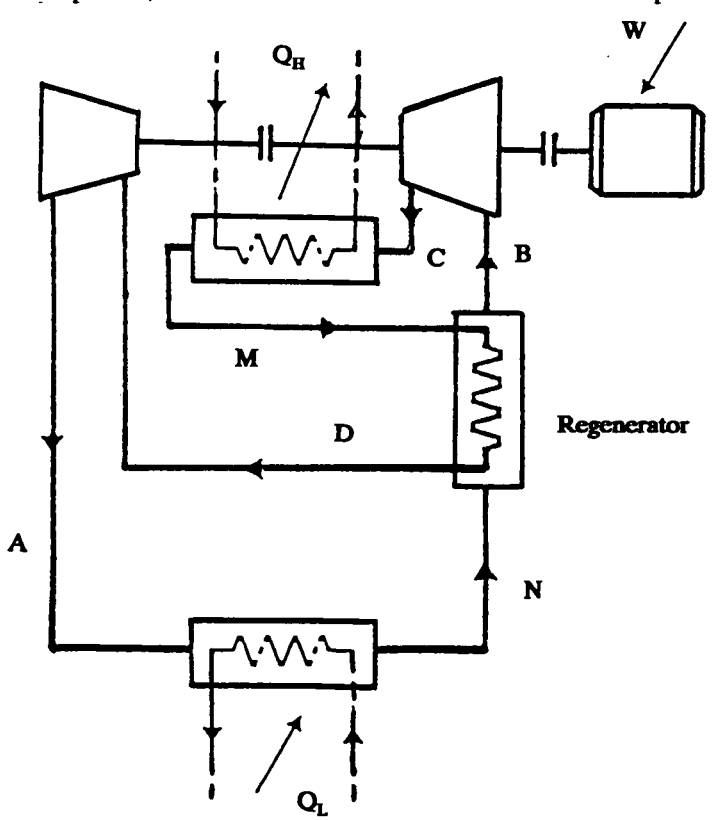

Fig. 2c. Schematic of regenerative Brayton closed-cycle system.

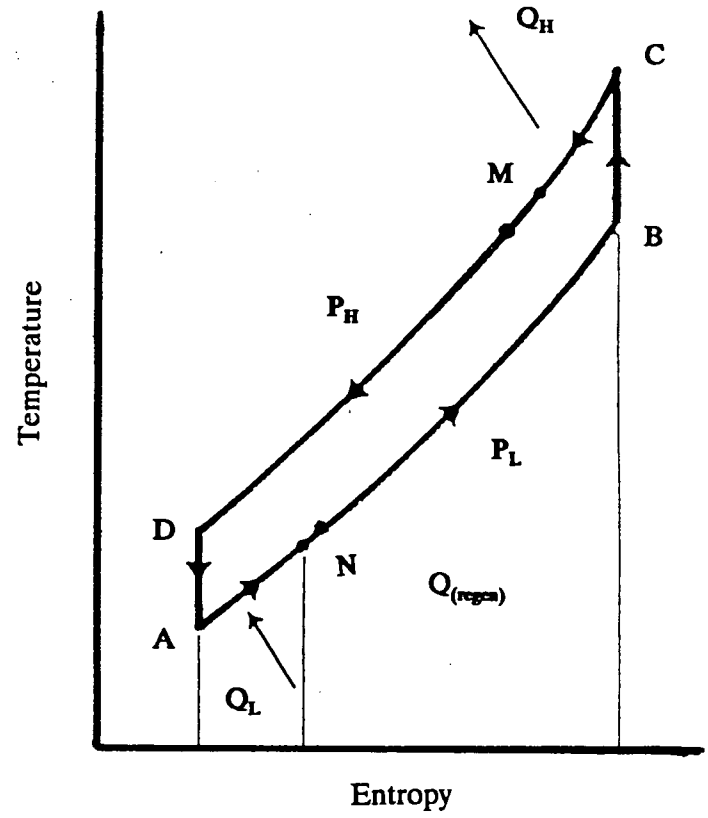

Fig. 2d. Temperature-entropy diagram of regenerative Brayton closed-cycle system.

The results based on the calculations from Figs. 2c and 2d are shown in Table 7:

- ambient temperature: 100°F;
- recirculation temperature: 75°F; and
- supply air temperature: 50°F.

Table 7. Reversed Brayton cycle mobile air conditioning calculated performance

	Case 1	Case 2
Turbine efficiency	0.9	0.9
Compressor efficiency	0.7	0.9
Cold-side heat exchanger temperature difference (°F)	10.0	10.0
Hot-side heat exchanger temperature difference (°F)	10.0	10.0
Regenerator temperature difference (°F)	10.0	10.0
Cooling COP	0.921	1.851

The computer code simulation indicated that the Brayton cycle is sensitive to the compressor efficiency. An increase of compressor efficiency from 0.7 to 0.9 will improve the system cooling COP from 0.921 to 1.851.

5.1.3 Rotary-Vane Compressor Air Cycle

Another type of air cycle MAC system is the rotary-vane air cycle system, called ROVAC in many publications (Edwards 1975), which uses a rotary-vane compressor to compress and expand air simultaneously. Figure 3 shows the schematic of a ROVAC machine. Air from the passenger compartment is compressed and sent to the outdoor heat exchanger. Air from the outdoor heat exchanger is then expanded by the compressor. No phase change of air occurs in either the outdoor heat exchanger or the indoor heat exchanger. Because of the isenthalpic effect during expansion, the air becomes very cold before it is delivered to the passenger compartment. A report by the engineering staff of Garrett (1977) indicates that ROVAC is not energy competitive with other MAC cooling methods. Table 8 shows the calculated and tested performance of the ROVAC model 30B/45/9.5-4.

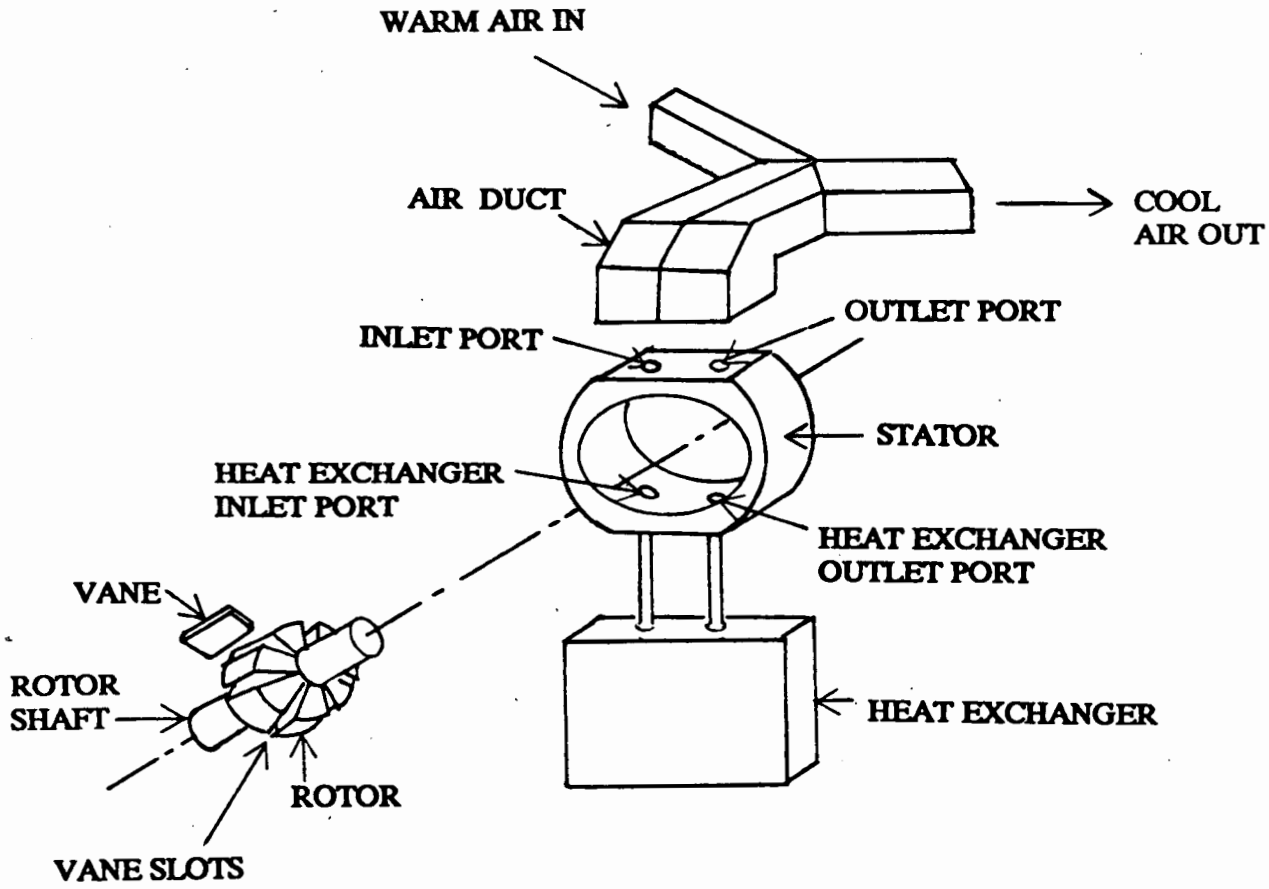

Fig. 3. ROVAC mobile air conditioning system.

Table 8. Calculated and actual measured performance data of ROVAC[a] model 30B/45/9.5-4[b]

Parameter	Computer predicted performance	Actual measured performance
Compressor outlet		
Temperature (°F)	316.0	315.0
Pressure (psia)	47.75	48.2
Expander inlet		
Temperature (°F)	105.5	108.0
Pressure (psia)	47.1	47.5
Expander outlet		
Temperature (°F)	9.0	34.0
Pressure (psia)	14.65	14.65
Rotor speed (rpm)	1510	1510
HP drive	3.875	5.75
Air mass flow rate (lb/hr)	451.0	453.0
Cooling capacity (Btu/h)	29,979	23,284
COP	3.04	1.59

[a] Rotary-vane air cycle.
[b] Garrett, Inc., *Study of Reduction of Accessory Horsepower Requirement,* 11th quarterly progress report to DOE, report 74-310860 (33), 1977.

The major differences between the calculated and tested values are in the air temperature at the exit of the expander and the power required to drive the unit. It looks as if a serious heat leak is in the compressor, yet the calculated air mass flow rate is very close to the measured value, and the calculated compressor outlet temperature is also very close to the measured temperature. Without the ROVAC model or detailed description of the operating conditions of the machine, further analysis of the system is difficult.

5.1.4 Thermoelectric Cooling System

The theory of TE cooling is based on the Peltier Effect of certain materials. A circuit is formed by two dissimilar materials, and a battery is introduced into the circuit to provide a direct current. The junction between the two dissimilar materials is heated or cooled. The heat evolved or absorbed per unit time is proportional to the current flowing. TE modules could, therefore, use dc power directly for cooling. This novel idea for MAC has several important advantages, such as no need for refrigerant, adjustable cooling capacity, fast response, high initial cooling capacity, no moving parts except a fluid circulating pump, and the ability to be operated as a heat pump by reversing the dc current direction. TE cooling systems are also very rugged, which means little maintenance is needed.

Figure 4a shows the schematic of a TE MAC system and Fig. 4b shows the schematic of a TE liquid-to-air heat exchanger. Two TE heat exchangers are needed, one acting as the condenser and the other as the evaporator, with a circulating fluid to transfer heat from evaporator to condenser. While one TE heat exchanger could work theoretically, the efficiency would not be as high as it would be with two TE heat exchangers. Air from the passenger compartment or ambient air, at state

point (SP) 1, flows through the TE evaporator to be cooled and then into the passenger compartment. The TE hot side is then cooled by the circulating fluid, which is pumped to the other TE heat exchanger (condenser), where the circulating fluid is cooled. Ambient air at SP 6 cools the condenser TE hot side. A mathematical model was developed for this application (Mathiprakasam et al. 1991, see Appendix B). Including the input of realistic design factors and the shelf TE module properties, Fig. 4c and Table 9 show the calculated results of the system COP as a function of transfer fluid temperature at the evaporator inlet.

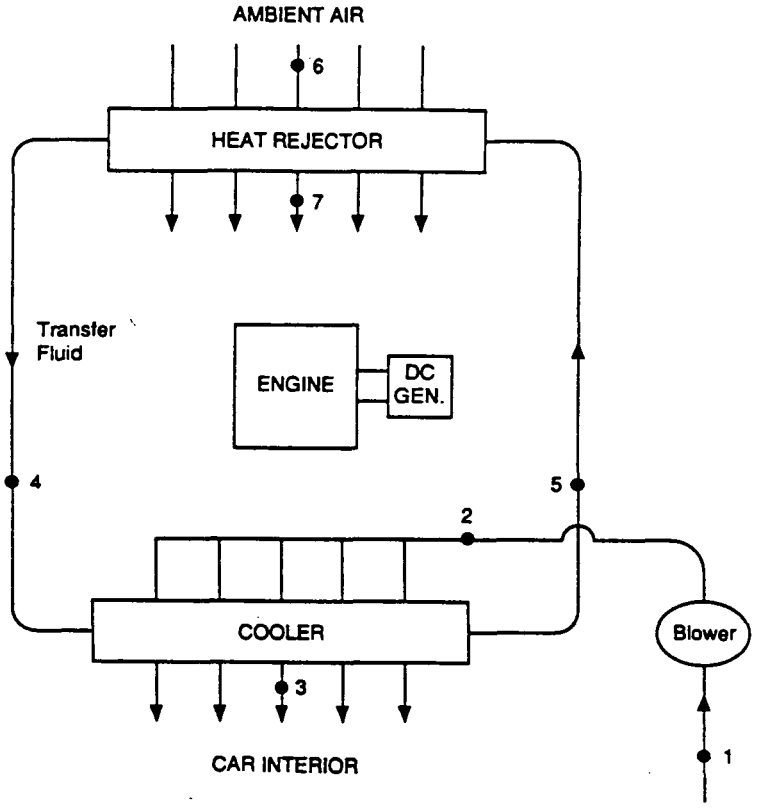

Fig. 4a. Schematic of thermoelectric mobile air conditioning system.

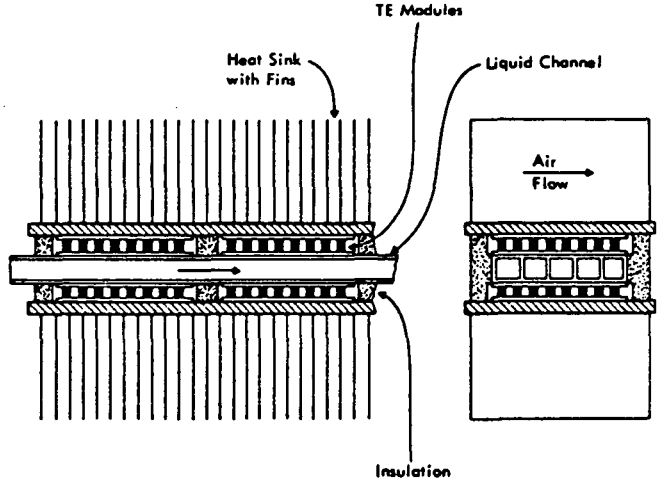

Fig. 4b. Schematic of thermoelectric liquid – air heat exchanger.

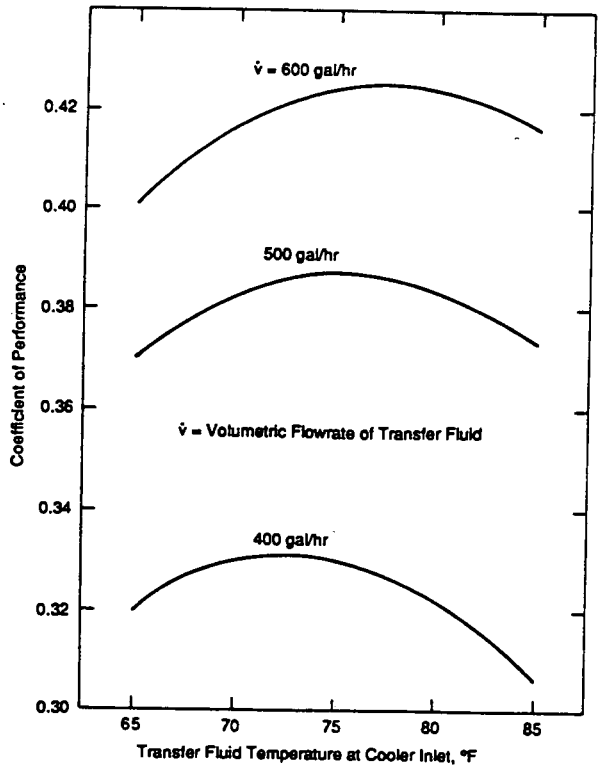

Fig. 4c. Coefficient of performance of thermoelectric mobile air conditioning system.

Table 9. Thermoelectric mobile air conditioning coefficient of performance as a function of cooler inlet heat transfer fluid temperature

Heat transfer fluid				
Flow rate (gal/h)	Cooler inlet temp. (°F)	COP Cooler	COP Rejector	COP Overall
400	65	3.318	0.460	0.3197
	70	2.363	0.546	0.3300
	75	1.781	0.633	0.3303
	80	1.389	0.721	0.3222
	85	1.108	0.806	0.3064
500	65	3.836	0.516	0.3696
	70	2.686	0.613	0.3830
	75	2.009	0.718	0.3872
	80	1.564	0.833	0.3836
	85	1.250	0.958	0.3732
600	65	4.234	0.548	0.4010
	70	2.925	0.653	0.4171
	75	2.173	0.769	0.4241
	80	1.687	0.901	0.4236
	85	1.348	1.050	0.4164

The maximum COP the TE system can achieve is around 0.42 (parasitic power not included). Realistic design factors (see Appendix B), which include TE thermal resistance of off-the-shelf TE modules, resulted in low COPs. For the past 30 years or so, there has been no major breakthrough in TE materials. While state-of-the-art TE modules are about 20% more efficient than off-the-shelf models, the current product has not reflected this technology. Even though the TE MAC COP is low compared with that of conventional MAC systems, TE MAC's unique advantages mentioned previously sometimes outweigh its low efficiency. A passenger railway coach in France adopted a TE air-conditioning system (Stockholm et al. 1982) mainly because of its low maintenance requirement. After a 3.5 year operation, there was no failure of the TE system, which confirmed its ruggedness. TE MAC could also be used on electric cars because of its simplicity. If TE MAC systems were adopted by automobile manufacturers in large volumes, however, there could be a shortage of one of the key elements, tellurium, unless a substitute material could be found.

5.1.5 Stirling Cycle Cooling System

The Stirling cycle theoretically could have high efficiency. It does not use CFC fluids, and it can have modulated cooling capacity. A Stirling cycle heat pump was patented for automotive heating and cooling applications; waste heat was considered as its power source (Kreger 1977). A study by ORNL on the impact of CFC alternatives on energy (Fischer et al. 1991) indicates that the Stirling cycle for MAC could have a system COP of 1.7, which is about 90% that of current MAC with a COP around 1.9. A recent study showed that a kinematic Stirling cycle residential air-conditioning system could have a COP of around 3.2 (Murphy 1991). Kinematic Stirling coolers can be operated by car-engine shaft power if so designed.

Stirling Thermal Motor (STM) has developed and demonstrated a variable-displacement four cylinder Stirling engine (Godett 1991), which could lead to the application of the Stirling cycle to MAC. The computer code performance projection of the Stirling engine MAC COPs was between 1.6 and 2.0, depending on the temperature difference between air temperature and Stirling heat exchangers. Figure 5 shows the schematic of a Stirling cycle MAC system.

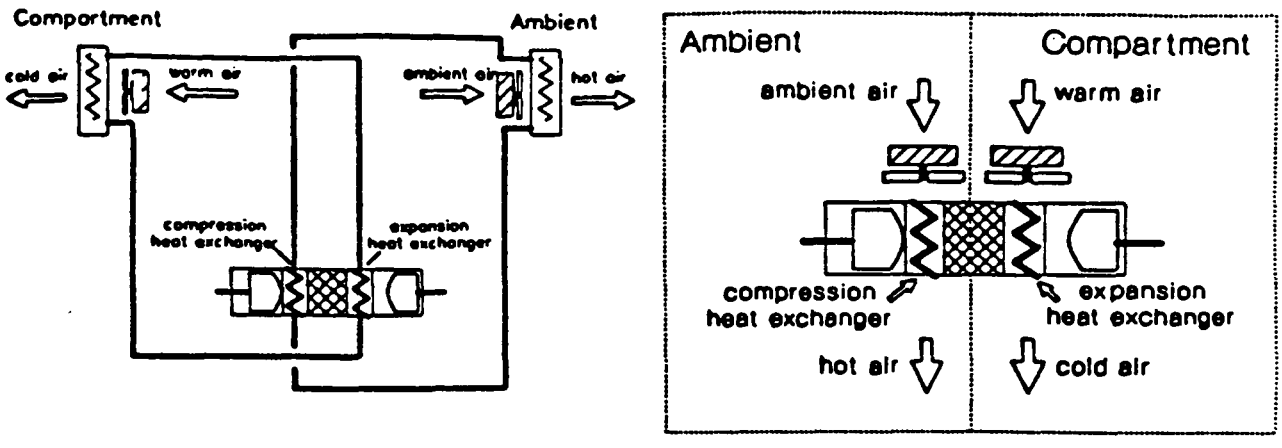

Fig. 5. Schematic of Stirling mobile air conditioning system.

Table 10 displays the performance of the STM model, STM4-35 SAC, by the computer code under the following assumed operating conditions:

- steady-state operation at 50 mph;
- cooling capacity of 30,000 Btu/h;
- evaporator inlet air: 110°F dry-bulb (DB) and 79°F wet-bulb (WB);
- evaporator outlet air: 48°F DB and WB at 285 cfm; and
- condenser inlet air: 110°F DB and 79°F WB at 2500 CFM.

Table 10. Calculated performance of Stirling Thermal Motor STM4-35 SAC model Stirling mobile air conditioning system

Car Engine rpm	Cooling capacity (Btu/h)	Cooling COP
700	15,000	1.80
1600	30,000	1.80
2400	30,000	1.95
3200	30,000	1.90
4000	30,000	1.85

The COPs can go somewhat higher at a lower cooling capacity. Another feature of the Stirling MAC is its capability to provide heat to the passenger compartment. The calculated heating COPs of the same machine ranged from 2.7 to 2.95. The above performance projections are based on a preliminary design and could be further improved.

5.2 COMPARISON OF WORK-ACTUATED MAC SYSTEMS

Even with the above assumptions, comparisons of different alternative cooling methods are quite difficult because some published results have been calculated by proprietary computer models. System COPs are a good indicator of how each system performs, but different MAC systems will have different design factors, which affects the system COPs. In this report, the comparisons will be largely based on the above assumptions and are qualitative only. Table 11 shows the COPs of selected work-actuated MAC systems.

Table 11. Comparison of work actuated mobile air conditioning systems

MAC Systems	COP[a]	Advantages	Limitations	Remarks
R-12 and R-134a conventional	1.8 - 1.9	High COP, matured tech.	R-12 to be phased out soon	R-134a faces future regulatory uncertainty
Hermetic vapor compression	1.53	Minimum refrigerant leakage	Less efficient than conventional MAC	Needs non-CFC refrigerant; needs extensive electric system modification
Brayton air cycle	0.92[b]	Potentially lightweight and compact	Low COP	Needs a high speed compressor and expander driver
ROVAC air cycle	1.59	—	—	Not enough recent data
Thermoelectric (TE) cooling	0.42[b]	Solid-state cooling, heat pump capability	Low COP, currently for special application only	Needs major TE material breakthrough to be practical
Stirling MAC	1.95[b]	High theoretical COP, heat pump capability	Most Stirling models are proprietary.	Inadequate experimental data for MAC application

[a] Coefficient of performance.

[b] Calculated values.

Table 11 indicates that conventional MAC has the highest COPs. Stirling cycle MAC seems to have high efficiency, but there is no quantitative experimental data to back up the calculated results. Much R&D work is needed for the above systems before they become practical.

5.3 HEAT ACTUATED MAC SYSTEMS

5.3.1 Ejector Cooling System

Figure 6a shows the schematic of an ejector cooling system, and Fig. 6b shows the schematic of an ejector MAC system (Balasubramaniam et al. 1976). The system shown in Fig. 6b can be operated in three different modes: engine cooling, engine cooling and passenger compartment cooling, and engine cooling and passenger compartment heating modes. The theory of ejector MAC systems is similar to that of steam jet refrigeration, using high-pressure gas through an ejector to create a low gas pressure on an evaporator partially flooded with refrigerant. The low pressure of the refrigerant causes low-temperature boiling, and the latent heat of vaporization provides the cooling effect. The low-pressure refrigerant is compressed at the divergent part of the ejector where refrigerant velocity is reduced and pressure is increased. After condensing, part of refrigerant is pumped to the boiler to produce high-pressure gas, and part of the gas is delivered to the evaporator.

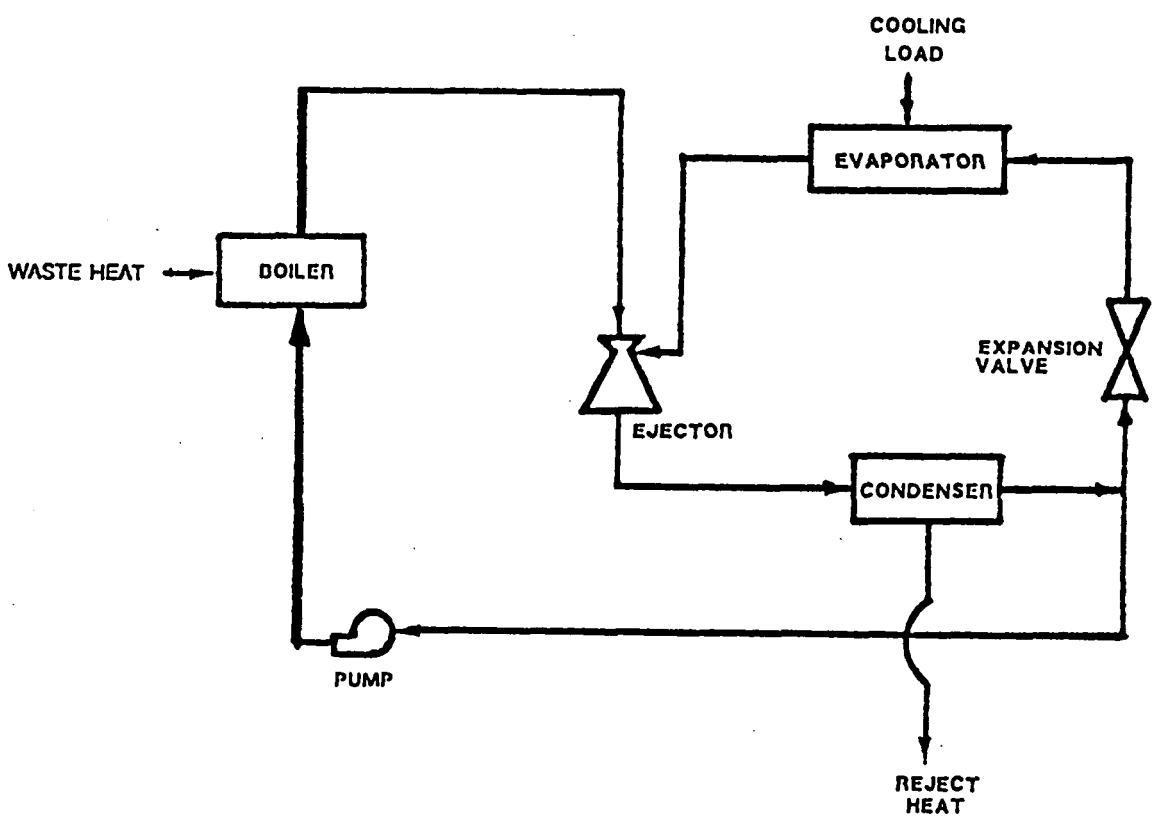

Fig. 6a. Schematic of ejector cooling system.

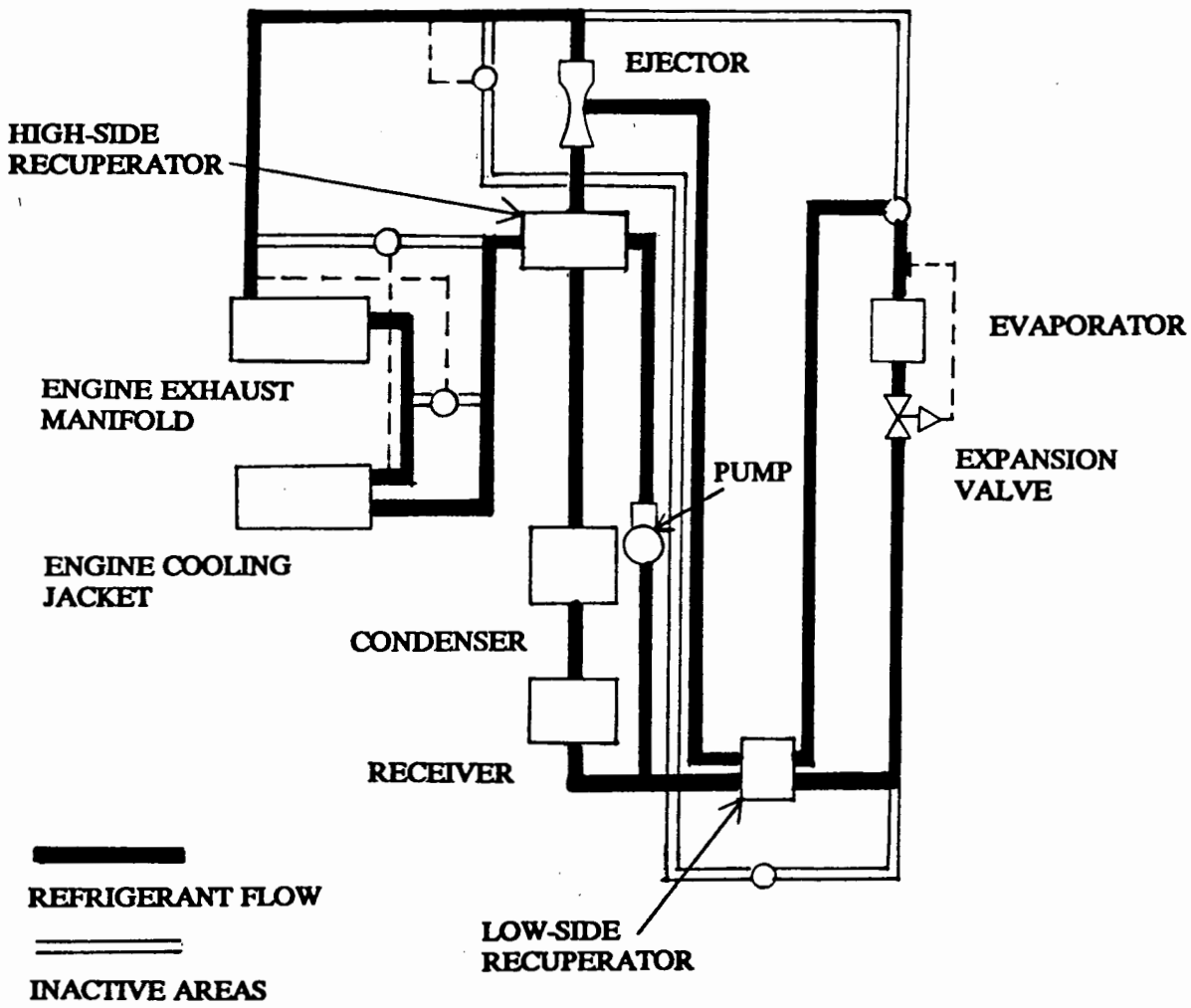

Fig. 6b. Schematic of ejector mobile air conditioning system in engine cooling and air-conditioning mode.

This is an alternative with many attractive advantages, such as a minimum of moving parts, the ability of the system to be actuated with low-temperature waste heat, high reliability, low maintenance cost, etc. There have been several studies of ejector automotive MAC systems utilizing waste heat. Lowi (1975) had a patent on an ejector MAC system. Balasubramaniam et al. (1976) studied the energy impact of such MAC systems on cars. They concluded from their analysis that over 70% of fuel consumption used to run MAC could be saved by using ejector MAC systems together with reducing the system weight. Table 12 shows the calculated performance of an ejector MAC system which indicates that the COP of the ejector system is only around 0.265 with R-11 as the refrigerant. With an alternative refrigerant such as R-134a, the system COP could be even lower. Other analyses indicate that this type of system has a low COP at around 0.3 (Chen 1978). Assuming that city

driving at 30 mph consumes 1.5 gal/h of gasoline, that the heating value of gasoline is equal to Grade 1 fuel at 137,000 Btu/gal., that a car radiator dissipates 1/3 of total heat, and that 60% radiator heat can be collected for ejector use, there will be only 41,000 Btu/h, which is on the borderline for ejector MAC application with only 1 ton of cooling capacity. Because of the low system COP, coupled with better automobile fuel mileage in the future, passenger cars might not have enough waste heat to power an ejector MAC system. Appendix C presents an ORNL ejector model computer code for performance calculation of the ideal case and the case of constant-pressure mixing.

Table 12. Comparison of conventional mobile air conditioning (MAC) and ejector mobile air conditioning[a]

	Conventional MAC	Waste-heat-driven ejector MAC
Cooling capacity (Btu/h)	12,000	12,750
Refrigerant	R-12	R-11
Energy input:		
Shaft (hp)	2.3 (compressor)	0.125 (pump)[b]
Cooling jacket (Btu/h)	-	44,100[c]
Exhaust (Btu/h)	-	4,000
Total (Btu/h)	6,000	48,100
Energy rejected to ambient:		
Refrigerant condenser (Btu/h)	18,000	60,850
Engine radiator (Btu/h)	57,500	-
COP	2.0[d]	0.265
Evaporator:		
Temperature (°F)	40	40
Pressure	52	7
Condenser:		
Temperature (°F)	141	120
Pressure (psia)	224	33
Refrigerant flow rate (lb/h)	190	560

[a]Balasubramaniam et al (1976).
[b]The conventional water pump is eliminated, so there is actually a negative shaft power increment.
[c]Assumed 60% jacket heat utilization.
[d]Based on compressor hp only. The thermal efficiency of the engine is not taken into account.

5.3.2 Absorption Cooling System

The most common heat-driven air-conditioning devices are absorption units. Figure 7 is a schematic of an absorption cooling system. Evaporated refrigerant is absorbed by another fluid, such as ammonia, at the evaporator, and this fluid then is absorbed by water at the absorber, creating a low pressure. The refrigerant-rich fluid is then pumped through heat exchanger to the regenerator, where heat is added to separate the refrigerant from the absorbent. High-pressure refrigerant goes to the condenser, then to the expansion device, and finally to the evaporator. The refrigerant-lean fluid is routed to the absorber to absorb evaporated refrigerant.

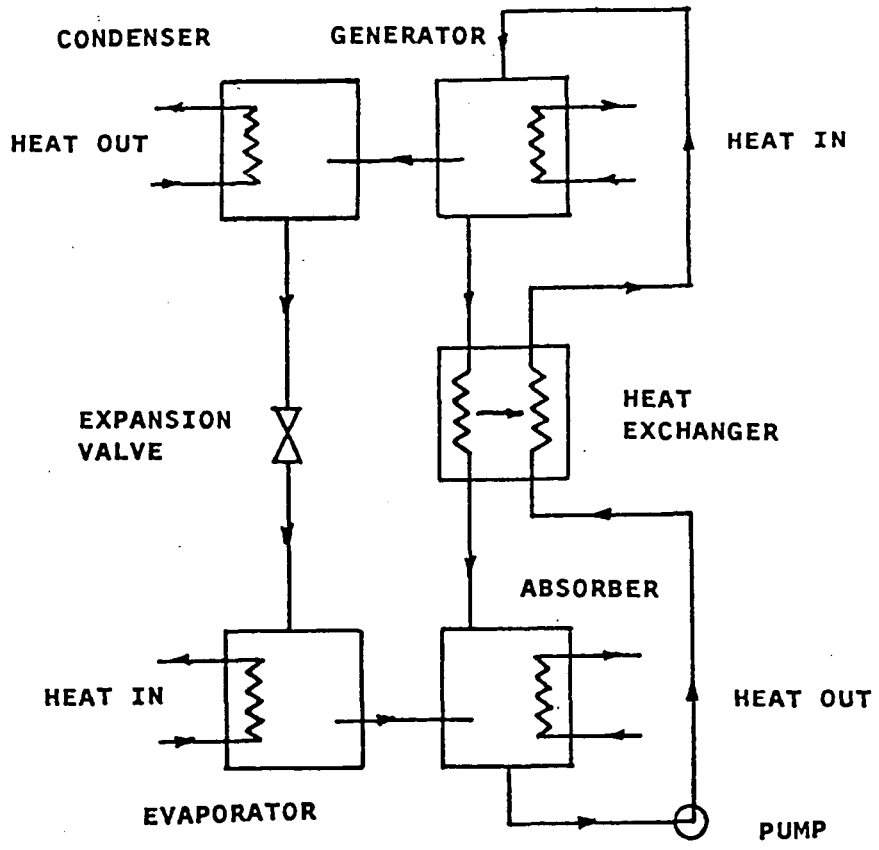

Fig. 7. Schematic of single-stage absorption cooling systems.

The system needs only a fluid circulating pump to work. An absorption system rejects 2.5 to 3.5 times as much heat as a vapor compression system. Usually the heat rejection is at a lower temperature, which results in very large heat exchangers compared with those of conventional MAC systems. Absorption systems need a pair of fluids. The most commonly used fluid pairs are ammonia/water and water/lithium bromide. R-22/dimethyl ether of tetraethylene glycol (DME-TEG) has also been considered. The estimated system cooling COP will be less than 0.3 (Akerman 1972). Because of its low COP, absorption MAC was not considered feasible for passenger cars. Charters and Megler (1974) have also studied an absorption cooling system for passenger cars. They concluded that the main problem is the proper selection of refrigerant and absorbent. Mei, Chaturvedi, and Lavan (1979) concluded that absorption refrigeration systems could be feasible for long-haul trucks. When fully loaded, such trucks usually get 5–7 miles per gallon of diesel fuel. Figure 8 shows that there is not enough waste heat from passenger cars to power such systems, assuming 50% exhaust gas heat collection and 0.5 system COP. Figures 9 and 10 show the schematic of a truck absorption refrigeration system. Assuming 30% of fuel energy to be exhausted at a temperature around 700–800°F, there will be enough energy to power a 3-ton refrigeration system. One of these researcher's concerns is that the exhaust gas pressure drop could possibly affect the truck engine performance. Their calculation shows that with proper design of exhaust gas passage through the generator, the pressure drop can be reduced to a negligible level.

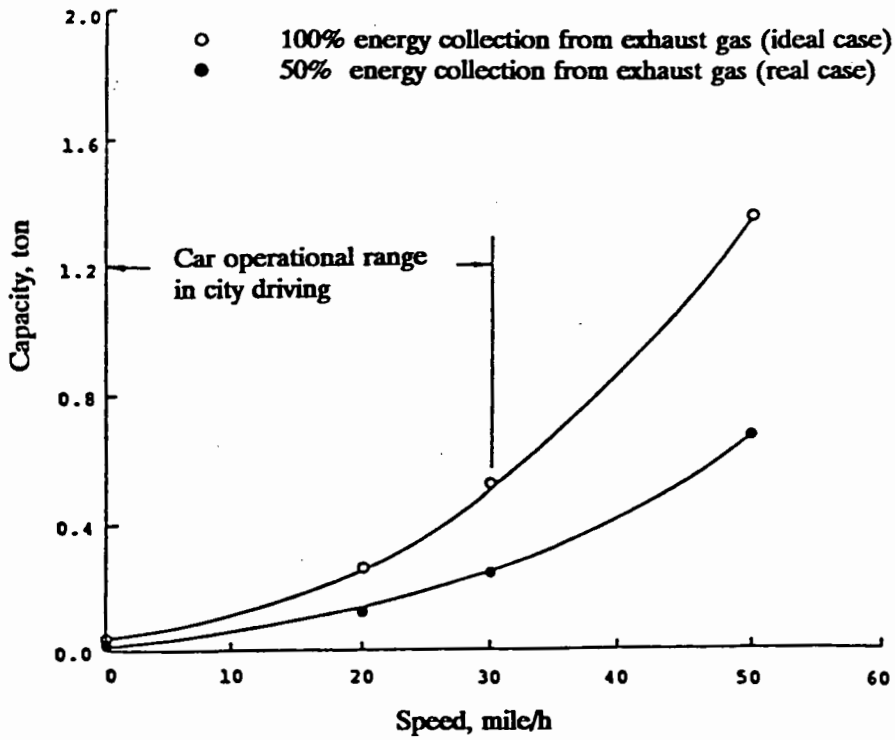

Fig. 8. Absorption system cooling capacity vs. car speed.

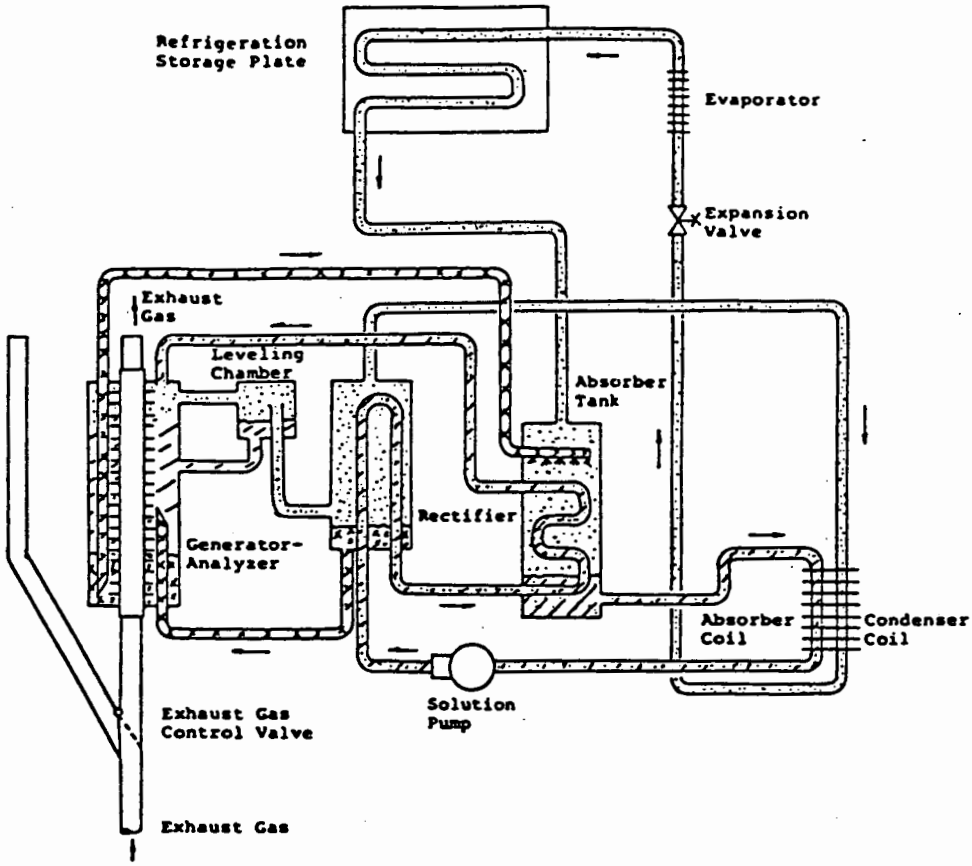

Fig. 9. Schematic of truck absorption refrigeration system.

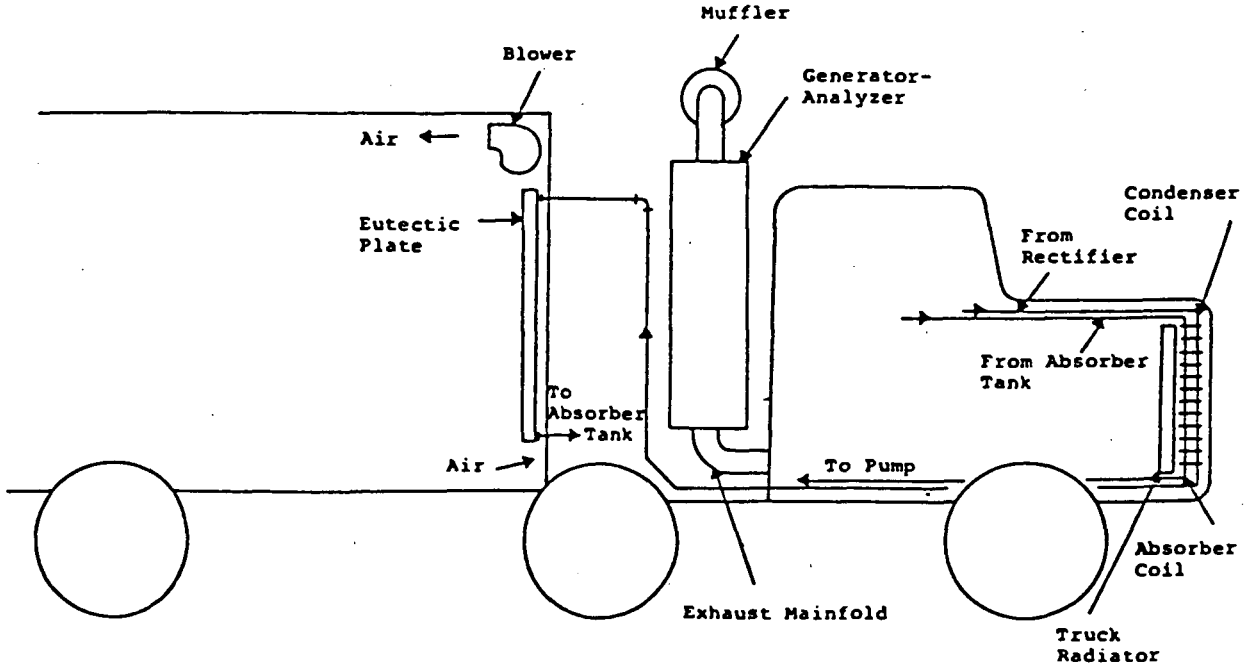

Fig. 10. Arrangement of truck absorption refrigeration system components.

Phillips (1990) has analyzed many advanced absorption cycles at standard Air-Conditioning and Refrigeration Institute (ARI) rated conditions (95°F ambient for summer and 47°F for winter). Table 13 shows the analytical results of some advanced absorption cycles for 80,000-Btu/h output. The one with a generator-absorber heat exchanger (GAX) shows great promise for future development because it has a structure of a single-stage machine yet has the capacity of a double effect unit. This type of system could possibly be used for bus air-conditioning purposes with exhaust gas as the power source.

5.3.3 Adsorption Cycle (Desiccant) Cooling System

Figure 11 shows the schematic of a desiccant cooling system powered by automobile waste heat. When waste heat is applied to a desiccant bed, vapor refrigerant is regenerated, and a high pressure is created. The high-pressure refrigerant vapor is condensed into liquid at the condenser and goes through an expansion device before being evaporated. The other desiccant bed adsorbs refrigerant vapor and creates a low pressure. After the cooling process is completed, the functions of the two desiccant beds are reversed to start another cooling process. In practical design, however, more than two desiccant beds could be needed to insure continuous supply of cooling capacity.

Table 13. Summary of advanced absorption cycle analyses for 80,000-Btu/h output

Cycle	Double effect[a]	Resorber augmented	Absorber heat exchange, low temp. diff.	Generator absorber heat exchange (GAX)	Variable effect	Two-stage GAX	2R
COP cooling	1.11	0.83	0.79	1.03	1.04	1.06	1.03
COP heating	2.11	1.83	1.79	2.03	2.04	2.06	2.03
Theoretical pumping power (watt)	388.4	87.5	39	36	35	45	110
Pressure level (psia)	67/285/1250	15/68/265	68/265	68/265	68/135/265	68/265	68/265 plus 6 intermediate
No. of pumps	2	2	1	1	2	2	2, 1 multistage
No. of major components	8	7	4	5	6	7	8
Cutoff limit (°F)	20	10	-50	5	-15	10	20
Convertibility	Complex	Complex	No need	Automatic	No need	Complex	Complex

[a] Ammonia/water properties uncertain at high pressures.

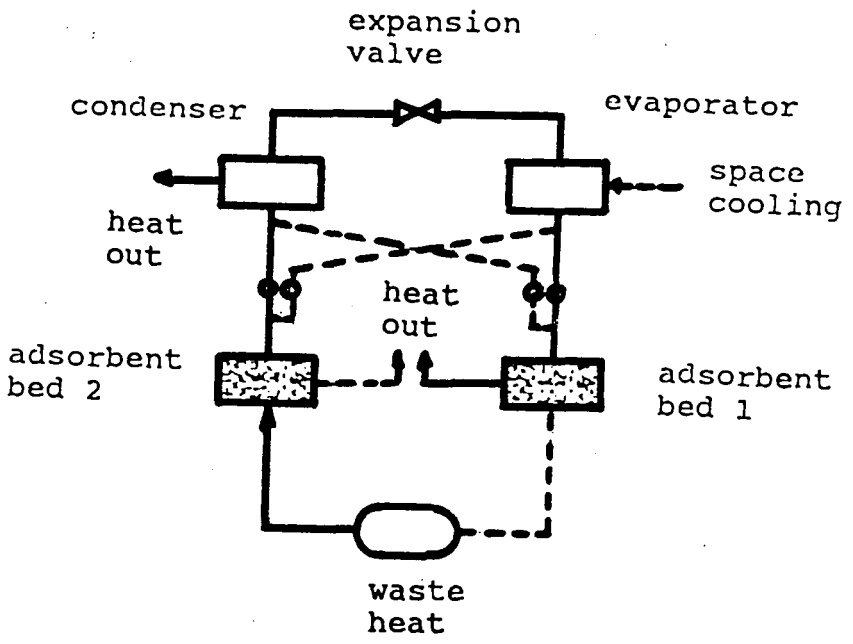

Fig. 11. Schematic of closed-cycle desiccant mobile air conditioning system.

It is possible to use molecular sieves or other solid desiccants to achieve automotive dehumidification and air conditioning. There are several advantages of desiccant cooling systems:

- Solid desiccants are usually low-cost materials.
- The choice of refrigerants is more flexible since solid desiccants can adsorb a number of refrigerant vapors. For example, silica gel can effectively absorb either water vapor or ammonia vapor.
- The cooling COPs (thermal) are higher than those of the absorption systems, on the order of 0.75, as calculated by Shelton, Wepfer, and Miles (1990).
- There are broad choices of solid-fluid pairs.
- The system design is simple.
- The desiccant can be regenerated by waste heat from car exhaust gas.

Schaetzle (1982) also studied desiccant MAC systems. Two closed-cycle engineering units were built with a molecular sieve as the desiccant (see Figs. 12a and 12b) and R-12 as the refrigerant. The system design is described in detail in the report. By simply adding heat to refrigerant-rich desiccant tubes, a high pressure vapor was created when refrigerant was regenerated. The two units were tested for more than 1 year and over 20,000 miles with no sign of fatigue problems. Though the system worked, the heat generated by the adsorption and regeneration processes that heats the desiccant was difficult to dissipate because of its relatively low temperature differential with ambient air, and it thus slowed down the cooling process unless large heat exchangers were used. Open-cycle desiccant MAC systems with water as the cooling medium are possible. Open-cycle systems have the advantage of low operating pressure without using CFC fluid, although water needs to be drained in the winter to avoid freezing, which might damage some of the components. Figure 13 shows the

adsorption isotherms of typical desiccants (Collier 1991). The figure indicates that molecular sieve (4A) is close to the desired desiccant isotherm. Future desiccant MAC designs should have fast absorption heat dissipation in order to achieve a better cooling effect and more frequent cycling for higher cooling capacity.

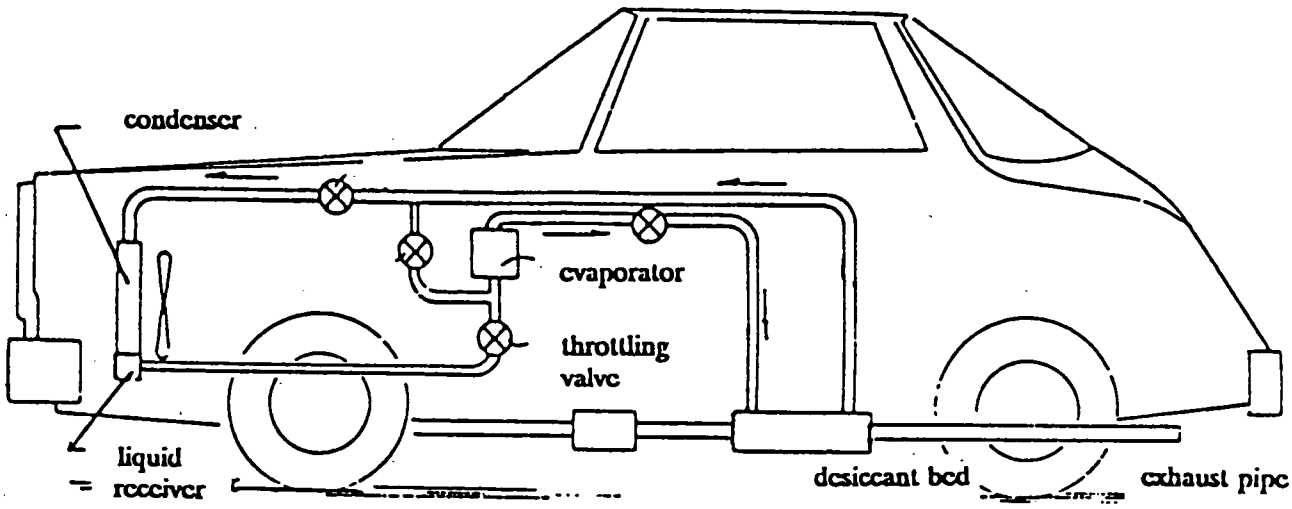

Fig. 12a. Schematic of desiccant mobile air conditioning component arrangement.

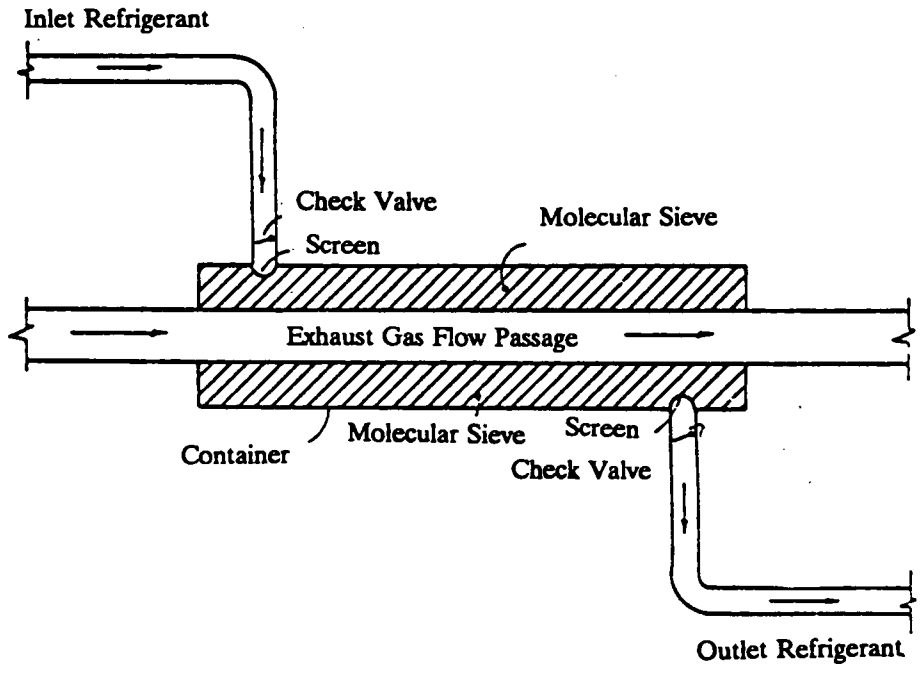

Fig. 12b. Schematic of desiccant bed design.

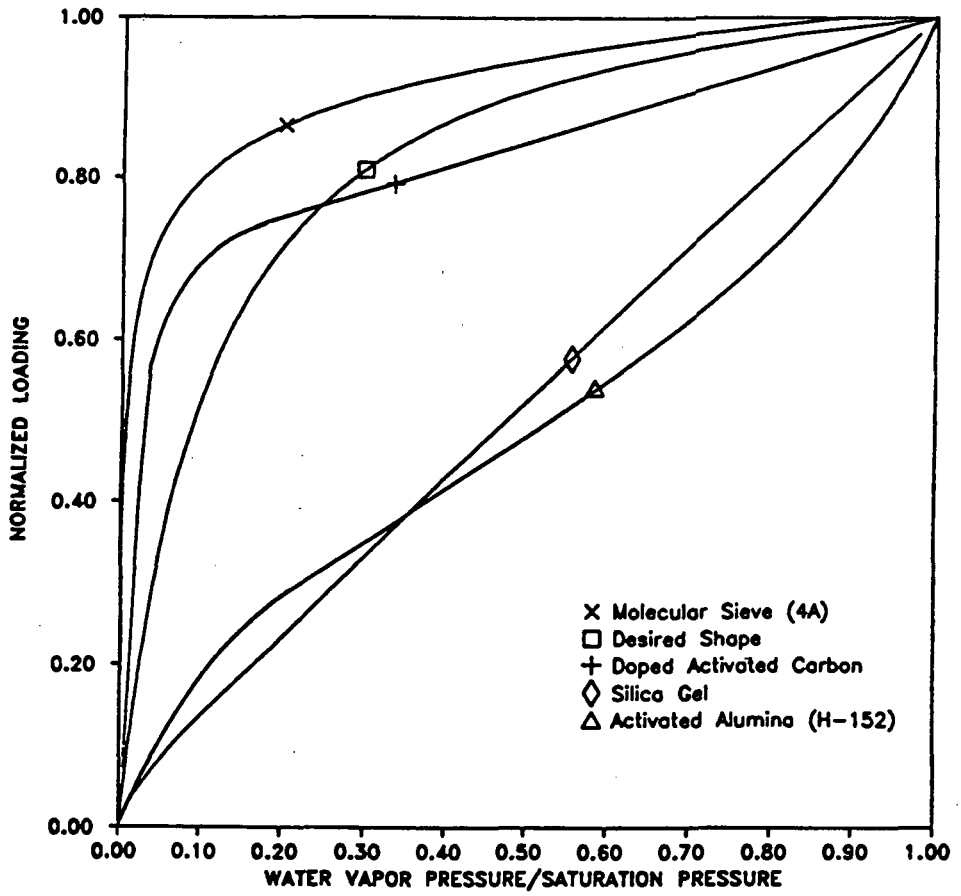

Fig. 13. Adsorption isotherms of typical desiccant materials.

5.3.4 Metal Hydride Cooling System

Hydriding alloys are intermetallic absorbent compounds that can absorb a very large quantity of hydrogen gas, and this process is reversible. The sorption and desorption processes are exothermic and endothermic reactions, respectively. It is during the desorption process that the cooling effect is achieved.

Figures 14a, 14b, and 14c present schematics of a metal hydrate cooling system. Initially it is assumed that the temperature of the MAC system is ambient temperature, T_m (point 2, Fig. 14c). When high-temperature waste heat is added to high-temperature hydride material, M_h, the temperature and pressure increase to T_h (point 3). At point 3, M_h starts desorbing hydrogen. The low-temperature hydride material, M_l, at point 4 starts absorbing hydrogen gas (Fig. 14a). The absorbing heat is dissipated to ambient air. M_h is then cooled down to ambient temperature and coupled with the pressure drop back to point 2. When the lower valve opens (Fig. 14b), M_l starts desorbing hydrogen gas because of the low pressure, and its temperature drops to T_L, which is lower than ambient temperature. The cooling effect is achieved at point 1.

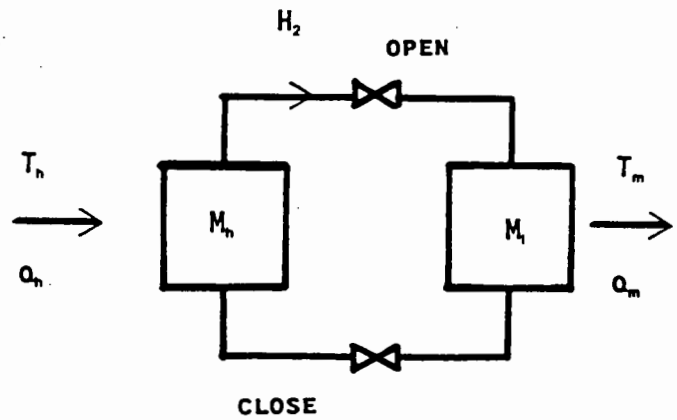

Fig. 14a. Schematic of metal hydride cooling system, regeneration mode.

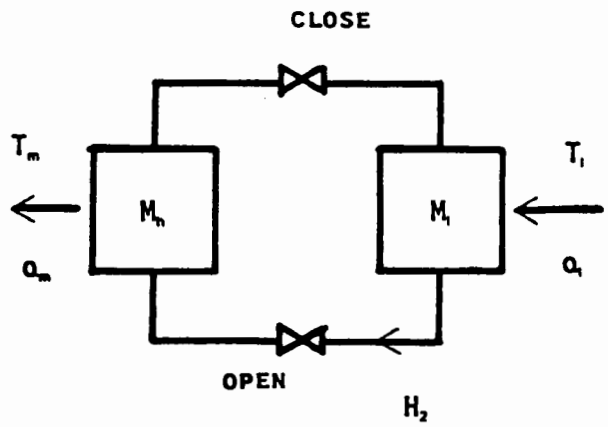

Fig. 14b. Schematic of metal hydride cooling system, absorption mode.

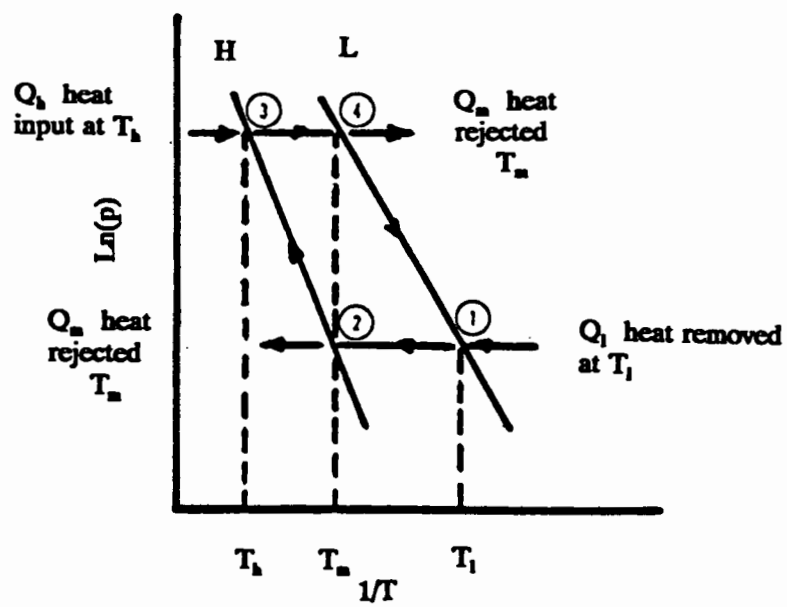

Fig. 14c. Pressure – temperature diagram of metal hydride cooling system.

Metal hydriding MAC systems can potentially be operated with waste heat from engine exhaust gas and can potentially have high COPs. They do not use CFC fluids, and they have a fast response rate. A paper by Horowitz et al. (1979) presents a metal hydride heat pump application concept by using tubes with high and low hydriding materials on each end of the tubes. It claims that this system could be used as a MAC system. Reilly and Sandrock (1980) mentions that Benz has demonstrated a bus running on hydrogen fuel with metal hydride to store hydrogen. MAC can be accomplished simply by taking advantage of the low temperature of the hydriding materials when they are in the desorbing mode. Figure 15 shows the schematic of a hydrogen fuel bus with metal hydride MAC.

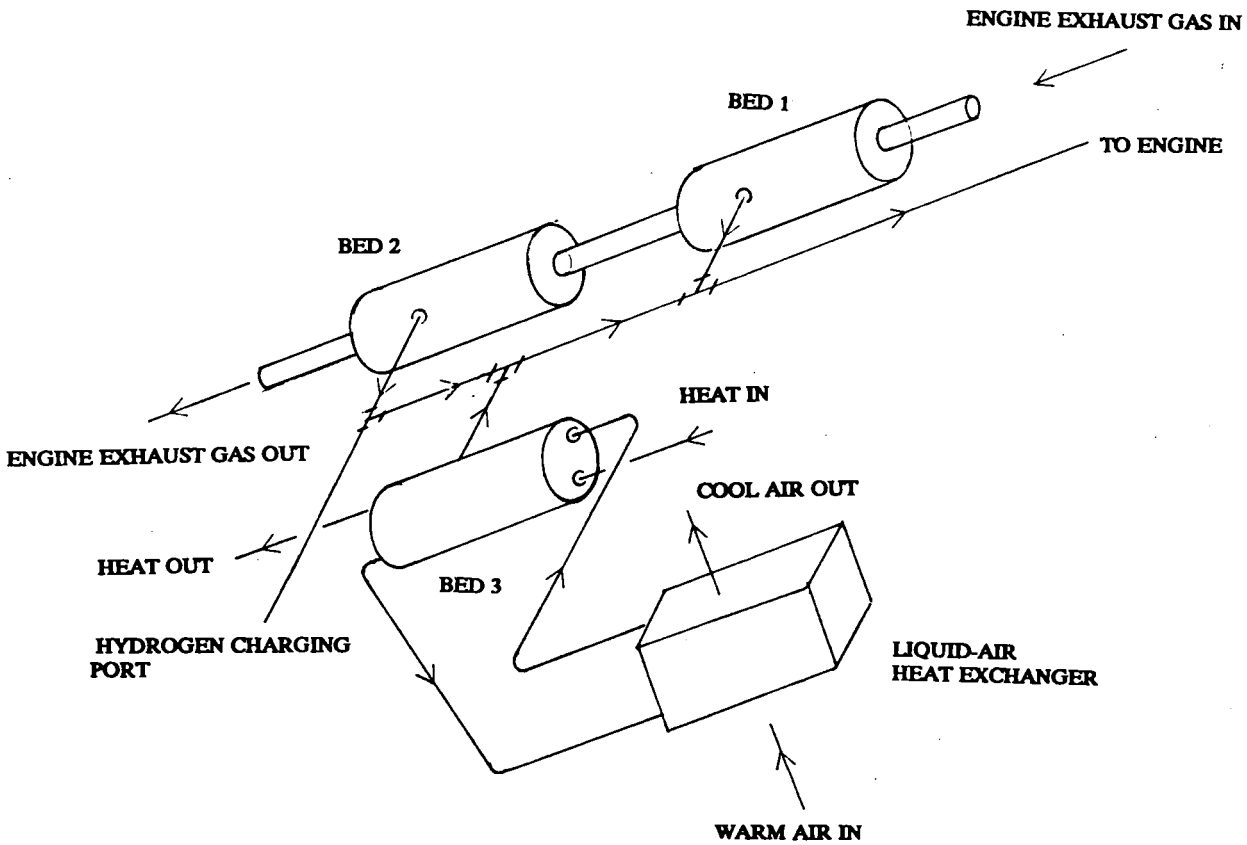

Fig. 15. Schematic of metal hydride mobile air conditioning system for hydrogen-fueled vehicle.

The schematic shows that the bus relies on three metal hydride beds for hydrogen storage, two low-temperature beds (beds 2 and 3, iron-titanium) and one high-temperature bed (bed 1, magnesium-nickel). Bed 1 is heated by the exhaust, mainly steam, from the engine, which is also an auxiliary heater for the bus. Bed 2 is also heated by the engine exhaust, partially condensed steam from bed 1. Bed 3 encloses a liquid heat exchanger to provide air conditioning for the bus. Ron, Kleiner, and

Navan (1984) have suggested, in a patent, that a waste-heat powered "hydrogen heat pump" be used in an air-conditioning system, which could also be used for MAC application, by means of a pair of metal hydriding materials. A paper by Ally, Rebello, and Rosso (1984) provides detailed calculations for metal hydride applications. Figure 16 shows the various promising metal hydriding materials.

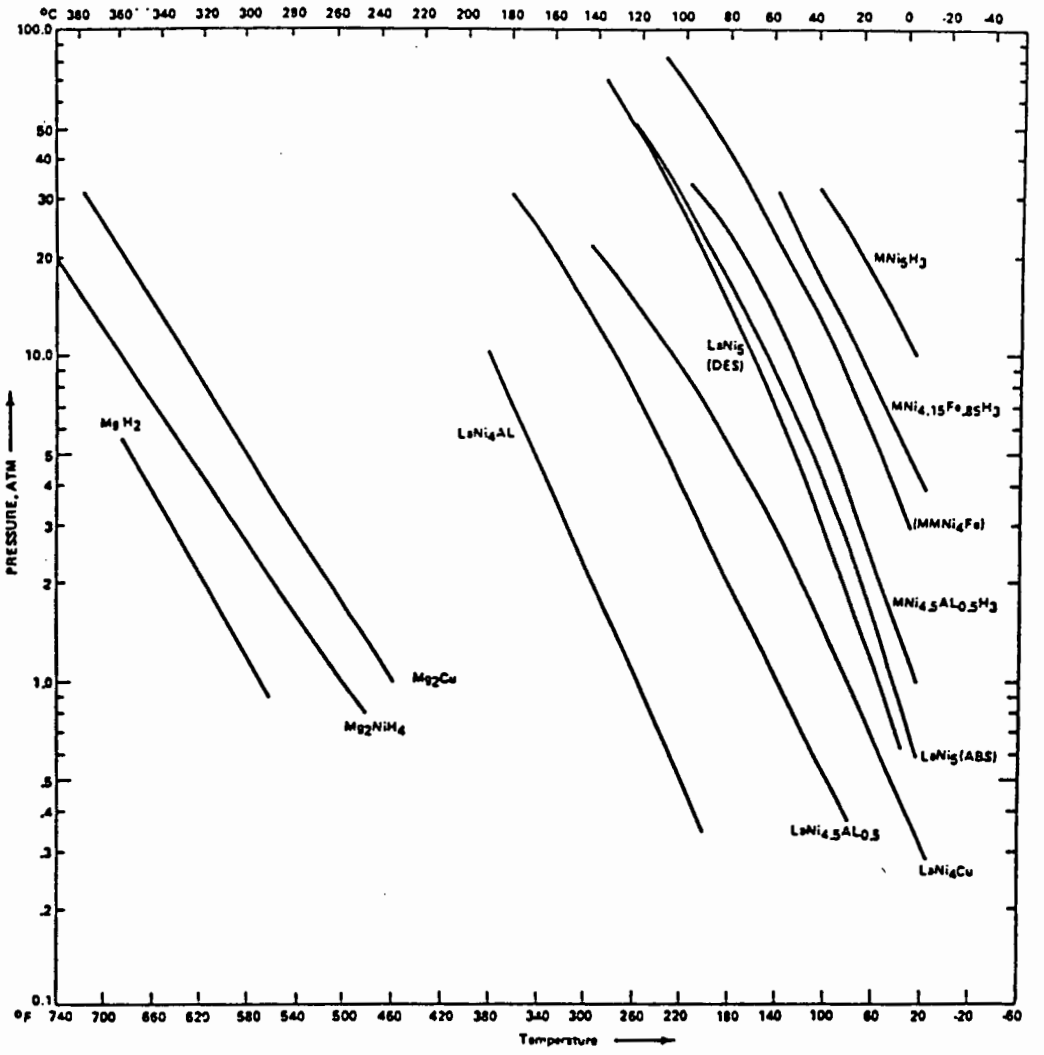

Fig. 16. Hydriding alloys.

Some major design considerations are listed below:

- *Reaction kinetics*. The intrinsic reaction rates of most rechargeable metal hydrides are very high. The maximum rate of charging and discharging hydrogen gas will depend entirely on the effectiveness of the container heat transfer design.

- *Heat transfer characteristics*. Thermal conductivity and specific heat should be considered in the heat exchanger design of hydride beds, since good heat exchange is the most important factor in rapid cycling.

- *Hydride expansion*. Substantial volume changes are associated with hydriding and dehydriding reactions. Typically, $LaNi_5$, for example, expands by about 25% during hydriding and contracts an equal amount up on dehydriding.

Metal hydride materials are not costly, and a system using them could have a fast response. Most hydride materials are very brittle, however, which should also be considered in the system design. It is estimated that a 1- to 1.5- cooling ton system requires 50 lb of hydriding materials. Appendix D shows a sample calculation of a metal hydride cooling system with $LaNi_5Al_{0.5}$ and $LaNi_5$ as the high- and low-temperature hydriding materials. The sample calculation indicates that a metal hydriding cooling system could have a first law COP (thermal) higher than 0.9. However, this COP is less than 19% of its Carnot efficiency.

Metal hydride MAC is definitely feasible for hydrogen fueled cars and buses. This is considered a long-term option only because of the huge investment required for power plants, hydrogen generation facilities, pipelines, and other necessary installations. Certain short-term applications, such as the operation of fleets of hydrogen powered vehicles serviced by central stations (Reilly and Sandrock (1980), are not limited by the above restrictions.

5.4 COMPARISON OF HEAT-ACTUATED MAC SYSTEMS

Each of the four systems selected in this study appears to have unique advantages and limits. Except for absorption systems, others are not well studied. Experimental data are, therefore, lacking. Comparison of the criteria, such as the system cooling COPs**, could be misleading without consideration of other design or operating factors. The comparison presented in Table 14 is qualitative and should be considered for reference only.

Table 14. Comparison of heat-actuated mobile air conditioning systems

MAC system	Estimated COP	Advantages	Limitations	Remarks
Ejector	0.3	Lightweight, compact, reliable	Low COP	Engine cooling capability
Absorption	0.79 - 1.00	Matured technology for conventional machines	Bulky and heavy components	Possible for truck refrigeration and bus MAC
Adsorption	0.75	Low cost materials	Adsorption heat dissipation problem	Experimental data based on R-12
Metal hydride	0.9	Fast response	High thermal expansion, brittle, and heavy	Possible for hydrogen fueled cars

**Thermal COPs

6. RECOMMENDATIONS FOR FUTURE MAC RESEARCH AND DEVELOPMENT

Based on this study, we recommend that MAC R&D work to be implemented in three stages: near-term (within the next 5 years), mid-term (5-15 years), and long-term (15 years and more).

6.1 NEAR-TERM R&D

Because most MAC manufacturers have focused on and invested in R-134a systems for the foreseeable future, they are unlikely to accept a radically changed MAC system for the time being. The near-term R&D work should concentrate on the improvement of R-134a systems. Current development, such as the parallel-flow condensers, has aimed more at matching the performance of R-12 systems. However, an immediate improvement in performance of 10% to 20% in term of system COP is possible without a major change in the system design such as using liquid over-feeding systems or condensate liquid cooling systems. Component development, such as refrigerant expansion devices, is also needed for R-134a systems.

6.2 MID-TERM R&D

There is potential improvement for reversed Brayton air cycle MAC systems if the compressor efficiency can be improved. Other mid-term R&D work includes an efficient high speed driver and the change of vehicle electrical system.

For Stirling cycle systems, their high theoretical COPs and heat pump capabilities are attractive. While most paper studies indicate that Stirling MAC is feasible, little quantitative experimental data are available to prove it. With the rapid advancement in Stirling machine technology in recent years, now is the time to develop the hardware to demonstrate this MAC concept.

For bus air conditioning and truck refrigeration systems, because of their large amount of high-temperature waste heat, it is possible to use this heat to power absorption refrigeration systems, as shown by some previous studies. A prototype unit of a simple single-stage absorption system could be the first realistic step in studying the feasibility of this concept.

6.3 LONG-TERM R&D

Absorption MAC systems with advanced cycles could drastically improve system COP. However, experimental data for advanced cycles are very rare. More fundamental R&D is needed before these cycles can be applied to MAC purposes.

Vehicle-waste-heat-operated desiccant MAC systems provide many advantages. However, closed-cycle systems using an ordinary refrigerant as the working fluid could be impractical because of the high system pressure and low density of most desiccant materials, which result in heavy system components. Open-cycle systems using water as the working medium could drastically reduce the weight. The heat transfer problems caused by desiccant regeneration and adsorption will have to be solved first.

Metal hydride MAC could be feasible if system weight were not a dominating factor. The R&D work will be in the component design areas such as how to deal with the thermal expansion and brittleness of hydriding materials. This concept will be feasible if hydrogen-fueled vehicles are produced.

7. CONCLUSIONS

Almost all automotive manufacturers consider R-134a as the alternative refrigerant for MAC application. Phase-in has been planned for between 1991 and 1995. However, major uncertainty has been associated with possible future regulatory action against R-134a for its GWP. It is therefore prudent to examine the non-CFC alternative cooling technologies. This report studied two types of MACs, work-actuated and heat-actuated.

For work-actuated MACs, some of the technologies are familiar, such as the hermetic system and Brayton air cycle MACs. Current hermetic systems almost exclusively use CFC-, hydrochlorofluorocarbon- (HCFC), or hydrofluorocarbon- (HFC) type fluids. If a non-CFC type refrigerant is developed for MAC application, hermetic MAC could be a viable alternative technology. Brayton cycle systems are desirable because air or other inert gases can be used as working fluids, but the system COPs need to be further improved before these systems are practical. The Stirling cycle MAC is very attractive for its high theoretical COPs and potential long life. Further development, however, is needed to experimentally prove that it is a viable MAC system. Solid-state cooling TE MACs, even with their many advantages, will probably remain for special applications if no major TE material breakthrough is achieved.

For heat-actuated MAC systems, the energy saving potential is high because of the possible use of waste heat. However, most of them have either low system COPs or bulky components. Ejector MAC is reliable and compact, but the calculated system COPs, with CFC fluids as the working medium, are only in the order of 0.3. Further COP reduction is expected if non-CFC fluids are used. With the automobile engines becoming more efficient in the future, it is possible that there would not be enough waste heat for ejector cooling. Absorption machines are a matured technology with bulky and heavy components that are not suitable for MAC applications. However, for long-haul trucks with an enormous amount of waste heat at a temperature around 700 to 800°F, absorption systems might be feasible for low-temperature truck refrigeration application for perishable foods. Adsorption, or desiccant, MACs could possibly use water as the working medium. Fast dissipation of adsorption and desiccant regeneration heat for efficient system operation could be a problem that would lead to large heat exchangers. Metal hydride MAC systems have a fast response and high theoretical COPs, and they need a set of hydriding materials to function. Since hydriding materials are intermetallic compounds, they are quite heavy, and that is not desirable for MAC application. However, if hydrogen is used as the automotive fuel, hydriding materials could be used as the hydrogen storage mediums. Metal hydride MAC comes with hydrogen-fueled cars because the release of hydrogen from hydriding materials will cool the metal hydride beds that can be used for MAC application.

The study indicates that each alternative MAC technology has its merits and limitations. Most of them require further R&D work. With R-134a facing possible future regulatory action and with no suitable non-CFC replacement refrigerant in sight, R&D of selected alternative MAC technologies has become urgent and important because of the long lead time required for such systems to be practical.

8. REFERENCES

Akabane, H., et al., "Evaluation of an Electrically Driven Automotive Air Conditioning System Using a Scroll Hermetic Compressor with a Brushless DC Motor," SAE Paper 890308, presented at the Society of Automotive Engineering International Congress and Exposition, Detroit, February 27–March 3, 1989.

Akerman, J. R., "Automotive Air Conditioning Systems with Absorption Refrigeration," SAE Paper 710037, Society of Automotive Engineers, Warrendale, PA, 1972.

Ally, M. R., W. J. Rebello, and M. J. Rosso, Jr., "Metal Hydride Chemical Heat Pump for Industrial Use," pp. 686–93 in *Symposium of the Sixth Annual Industrial Energy Conservation Technology Conference & Exhibition,* Vol. 2, Intersociety Energy Conversion Engineering Conference 1984, Houston, April 15–18, 1984.

ARI R & T Reference List, Research and Technology Department, Air-Conditioning and Refrigeration Institute, Arlington, VA, January 1991.

ASHRAE HVAC Application Handbook, Ch. 9, American Society of Heating, Refrigerating, and Air-Conditioning Engineers, Inc., Atlanta, 1991.

Balasubramaniam, M., et al., "Fuel Economy Potential of a Combined Engine Cooling and Waste Heat Driven Automotive Air-Conditioning System," pp. 25-32 in *11th Intersociety Energy Conversion Engineering Conference,* State Line, NV, September 12, 1976.

Ballaney, P. L., O. P. Grover, and R. P. Kapoor, "Air-conditioning of Fiat Car From Waste Heat Energy," *J. Inst. Eng.* (India), Mech. Eng. Div. **57**, 342–45 (May 1977).

Bateman, D. J., "Replacement Refrigerant for Automotive Air Conditioners," *Automot. Eng.* **97**, (November 1989).

Bateman, D. J., "Current Development Status of HFC-134a for Automotive Air Conditioning," SAE Paper 900213, presented at the Society of Automotive Engineering International Congress and Exposition, Detroit, February 26–March 2, 1990.

Bateman, D. J., et al., "Refrigerant Blends for the Automotive Air Conditioning Aftermarket," SAE Paper 900216 presented at the Society of Automotive Engineers International Congress and Exposition, Detroit, February 26–March 2, 1990.

Bernauer, O., and H. Buchner, "Use of Metal Hydride in Heat Pump Cycles," pp. 323–38, in *International Symposium on Industrial Application of Heat Pumps, Coventry, England, March 24–26, 1982,* BHRA Fluid Engineering, 1982.

Bessler, W., and F. Forbe, "Electrically Driven Automotive Air Conditioner," SAE Paper 870035, presented at the Society of Automotive Engineers International Congress and Exposition, Detroit, February 23–27, 1987.

Bivens, D. B., et al., "Evaluation of Fluorocarbon Blends as Automotive Air Conditioning Refrigerants," SAE Paper 890306, presented at the SAE International Congress and Exposition, Detroit, MI, February 27–March 3, 1989.

Charters, W. W. S., and V. Megler, "Waste Heat Absorption Systems for Automotive Air Conditioning," pp. 62–65, in *Thermofluids Conf. Paper, Melbourne, December 3–5, 1974,* Inst. of Eng., (Natl. Conf. Publ. no. 74/7), Sydney, 1974.

Godett, E. M., of Stirling Thermal Motor, Inc. personal communication on information regarding Stirling MAC to R. Sullivan, program manager of the Department of Energy, August 1991.

Chen, L. T., "A Heat Driven Mobile Refrigeration Cycle Analysis," *Energy Convers.* 18, 25–29 (1978).

Data Analysis, Inc., *Absorption Air Conditioning for Automobiles. Final Report, August 31, 1979–August 31, 1980,* DOE/R2/05071-T1, U.S. Department of Energy, November 1980.

Davis, S., and P. Hu, *1991 Transportation Energy Data Book: Edition 11,* ORNL-6649, Oak Ridge Natl. Lab., Oak Ridge, TN, 1991, pp. 1–4.

Dieckmann, J., and J. Bentley, *Non-Inert Refrigerant Study for Automotive Applications,* prepared for U.S. Department of Transportation, Transportation Systems Center, to be published.

Dieckmann, J., and D. Mallory, *Study of Long Options for Electric Vehicle Air Conditioning,* draft topical report, prepared by Arthur D. Little, Inc., for Idaho Natl. Eng. Lab., Idaho Falls, Idaho, June 1990.

Edwards, T. C., "ROVAC Automotive Air Conditioning System," SAE Technical Paper 750403, Society of Automotive Engineers, Warrendale, PA, 1975.

El-Bourini, R., K. Hayashi, and T. Adachi, "Automotive Air Conditioning System Performance with HFC-134a Refrigerant," SAE Paper 900214, presented at the Society of Automotive Engineers International Congress and Exposition, Detroit, February 26–March 2, 1990.

El-Bourini, R., T. Adachi, and K. Tajima, "Performance Evaluation of an Automotive Air Conditioner with Expansion Valve Control Using CFC-12 & HFC-134a Refrigerants," SAE Paper 910218, presented at the Society of Automotive Engineers International Congress and Exposition, Detroit, February 25–March 1, 1991.

Fischer, S. K., et al., *Energy and Global Warming Impacts of CFC Alternative Technologies,* draft report, sponsored by the Alternative Fluorocarbon Environmental Acceptability Study and the U.S. Department of Energy, December 1991.

Garrett, Inc., *Study of Reduction of Accessory Horsepower Requirement,* 11th quarterly progress report to DOE, report 74-310860 (33), 1977.

Guntly, L., "Use of HCFC-22 in a Vehicular Air Conditioning System," SAE Paper 900599, presented at the Society of Automotive Engineering International Congress and Exposition, Detroit, February 26–March 2, 1990,

Halberstadt, M., Motor Vehicle Manufacturers Assoc., personal communication to P. D. Fairchild, Oak Ridge Natl. Lab., 1991.

Hamner, R. M., "Use of Waste Heat for Automotive Air Conditioning," SAE Paper 810504, presented at the Society of Automotive Engineering International Engineering Congress and Exposition, Detroit, February 23, 1981.

Horowitz, J. S., P. A. Nelson, and C. A. Bloomquist, "Engineering Development of a HYCSOS Chemical Heat Pump," pp. 371–72, in *2nd Miami International Conference on Alternative Energy Sources, Proceedings of Condensed Papers,* 1979.

Ikeda, S., Y. Yoshii, and Y. Tamura, "Air Conditioning Electric Vehicles with an Electronically Driven Variable Speed Scroll Type Compressor," SAE Paper 901738, presented at the Society of Automotive Engineering International Congress and Exposition, Detroit, September 17–20, 1990.

Jackson, D. D., "Feasibility Study of the Utilization of Residual Engine Heat for the Operation of an Automotive, Absorption-Type, Air Conditioner", Ph.D. thesis, Iowa State University, Ames, IA, 1987.

Kreger, T. C., "Automotive Heat Pump," U.S. patent 4,123,916, July 5, 1977.

Lowi, Jr., A., "Combined Engine Cooling System and Waste-Heat Driven Automotive Air Conditioning System," U.S. patent 4,164,850, November 12, 1975.

Madsen, T. L., B. Olesen, and K. Reid, "New Method for Evaluation of the Thermal Environment in Automotive Vehicles," *ASHRAE Trans.* 92(1B), 38–54 (1986).

Mathiprakasam, B., et al., "Study of Thermoelectric Technology for Automobile Air Conditioning," ASME Symposium Volume AES-Vol. 26 on *Heat Pump Design, Analysis, and Application,* American Society of Mechanical Engineers 1991 Winter Annual Meeting, Atlanta, December 2–6, 1991.

Mei, V. C., Oak Ridge Natl. Lab., Oak Ridge, TN, personal communication with P. D. Fairchild, Oak Ridge Natl. Lab., March 1991.

Mei, V. C., S. Chaturvedi, and Z. Lavan, "A Truck Exhaust Gas-Operated Absorption Refrigeration System," *ASHRAE Trans.* 85(2), 1979.

Montreal Protocol on Substances that Deplete the Ozone Layer — Final Act. United Nations Environmental Programme (UNEP), 1987.

Murphy, R. W., Oak Ridge Natl. Lab., Oak Ridge, TN, personal communication with W. Waldron, Mechanical Technology, Inc., Albany, NY, July 1991.

Nartron Corp., Systems Division, advertisement for TurboCool™ Automotive Climate Control System, Pontiac, MI, 1991.

Phillips, B. A., *Development of a High-Efficiency, Gas-Fired, Absorption Heat Pump for Residential and Small-Commercial Applications, Phase I Final Report: analysis of Advanced Cycles and*

Selection of the Preferred Cycle, ORNL/Sub/86-24610/1, Oak Ridge Natl. Lab., Oak Ridge, TN, 1990.

Provost, M. J., and E. M. Arrieta, "A Thermodynamic Analysis of Alternative Refrigerants in Vapor-Compression Refrigeration Cycles," SAE Paper 900215, presented at the Society of Automotive Engineering International Congress and Exposition, Detroit, February 26–March 2, 1990.

Radermacher, R., and J. P. Lavelle, "Comparison of Refrigerant 12 with the Blend R-22/R-142b," pp. 25–30 in *ASME Symposium Volume on Analysis and Application of Heat Pumps*, AES-VOL. 8, ASME Winter Annual Meeting 1988, Chicago, November 27–December 2, 1988, American Society of Mechanical Engineers, Chicago, 1989.

Reilly, J. J., and G. D. Sandrock, "Hydrogen Storage in Metal Hydrides," *Scientific American*, 118-29 (February 1980).

Ron, M., M. Kleiner, and U. Navon, "Method and Apparatus for Air Conditioning by Means of a Hydrogen Heat Pump," U.S. patent 4,436,539, March 1984.

Ruth, D. W., "Simulation of Modelling of Automobile Comfort Cooling Requirements," *ASHRAE J.*, 53–55 (May 1975).

Shelton, S. V., W. J. Wepfer, and D. J. Miles, "Ramp Wave Analysis of the Solid-Vapor Heat Pump," *J. Energy Resour. Technol.* **112**(1), 69–78 (1990).

Spauschus, H. O., "HFC 134a as a Substitute Refrigerant for CFC 12," *Int. J. Refrig.* **11**, 389–92 (November 1988).

Statt, T., "Use of Chlorofluorocarbons in Refrigeration, Insulation, and Mobile Air Conditioning in the USA," *Int. J. Refrig.* 11(4), 225 (July 1988).

Stockholm, J. G., L. Pujol-Soulet, and P. Sternat, "Prototype Thermoelectric Air Conditioning of a Passenger Railway Coach," pp. 136–41, in *Symposium of Fourth International Conference on Thermoelectric Energy Conversion, the University of Texas at Arlington, March 10–12, 1982*, University of Texas Press, 1982.

Struss, R. D., J. P. Henkes, and L. W. Gabbey, "Performance Comparison of HFC-134a and CFC-12 with Various Heat Exchangers in Automotive Air Conditioning Systems," SAE Paper 900598, presented at the Society of Automotive Engineering International Congress and Exposition, Detroit, February 26–March 2, 1990.

Sullivan, R., and S. Selkowitz, *Effect of Glazing and Ventilation Options on Automobile Air Conditioner Size and Performance*, LBL-26552, Lawrence Berkeley Laboratory, Applied Science Division, Berkeley, CA, December 1988.

Ushimaru, K., "Impact of CFC Curtailment on Refrigeration and Mitigation Research in Japan," p. 113 in *CFCs: Today's Options-Tomorrow's Solutions*, Proceedings of American Society of Heating, Refrigerating, and Air-Conditioning Engineers 1989 CFC Technology Conference, September 27–28, 1989, National Institute of Standards, 1989.

APPENDIX A

COMPUTER CODE FOR BRAYTON CLOSED AIR CYCLE AND SAMPLE INPUT DATA

```
C THIS PROGRAM CALCULATES ENVIRONMENTAL CONTROL SYSTEM PARAMETERS
C FOR
C  A CLOSED BRAYTON CYCLE SYSTEM WITH REGENERATION
C    STATE 1:  DOWNSTREAM OF TURBINE/UPSTREAM OF COLD HEAT EXCHANGER
C          2:  DOWNSTREAM OF COLD SIDE OF REGENERATOR/UPSTREAM OF
C              COMPRESSOR
C          3:  DOWNSTREAM OF COMPRESSOR/UPSTREAM OF HOT HEAT EXCHANGER
C          4:  DOWNSTREAM OF HOT SIDE OF REGENERATOR/UPSTREAM OF
C              TURBINE
C          5:  DOWNSTREAM OF HOT HEAT EXCHANGER/UPSTREAM OF HOT SIDE OF
C              REGENERATOR
C          6:  DOWNSTREAM OF COLD HEAT EXCHANGER/UPSTREAM OF COLD SIDE
C              OF REGENERATOR
      DIMENSION TF(10),TR(10)
      NAMELIST/AUTOCC/TAMB,TSUP,TREC,ETAC,ETAT,DTCL,DTHT,DTRG,QREF,CAY
      OPEN(10,FILE='AUTOCC.DAT')
      READ(10,AUTOCC)
    3 WRITE(6,2000)TAMB,TSUP,TREC,ETAC,ETAT,DTCL,DTHT,DTRG,QREF,CAY
 2000 FORMAT(3F5.0,2F6.3,3F6.2,F8.0,F6.2,/)
      CPA=0.24
      XP=(CAY-1.)/CAY
      TR(1)=TSUP-DTCL+459.67
      TR(5)=TAMB+DTHT+459.67
      TR(6)=TREC-DTCL+459.67
      TR(4)=TR(6)+DTRG
      TR(2)=TR(5)-DTRG
      ER=(1./(1.-(TR(4)-TR(1))/TR(4)/ETAT))**(1./XP)
      TR(3)=TR(2)*(1.+(ER**XP-1.)/ETAC)
      COP=(TR(6)-TR(1))/((TR(3)-TR(2))-(TR(4)-TR(1)))
      WRITE(6,8000)ER,COP
 8000 FORMAT(' PRESSURE RATIO =',F6.3,'  COOLING COP =',F7.3)
      DO 100 I=1,6
      TF(I)=TR(I)-459.67
      WRITE(6,1000)TF(I)
 1000 FORMAT(F8.2)
  100 CONTINUE
      EFFR=(TF(2)-TF(6))/(TF(5)-TF(6))
      EFFC=(TF(6)-TF(1))/(TREC-TF(1))
      EFFH=(TF(3)-TF(5))/(TF(3)-TAMB)
      WRITE(6,3000)EFFR,EFFC,EFFH
 3000 FORMAT(' HEAT EXCHANGER EFFECTIVENESSES:  REC = ',F4.3,'   COLD =
     1',F4.3,'   HOT = ',F4.3)
      WA=QREF/CPA/(TREC-TSUP)
      WAS=WA/3600.
      PWRC=WA*CPA*(TF(3)-TF(2))
      PWRT=WA*CPA*(TF(4)-TF(1))
      PWRN=PWRC-PWRT
      PWRCW=PWRC*0.2928751
      PWRTW=PWRT*0.2928751
```

```
      PWRNW=PWRN*0.2928751
      PWRCH=PWRCW/745.6999
      PWRTH=PWRTW/745.6999
      PWRNH=PWRNW/745.6999
      WRITE(6,4000)WAS
4000 FORMAT(' AIR FLOW = ',F6.4,' LBM/S')
      WRITE(6,5000)PWRC,PWRT,PWRN
5000 FORMAT(' COMPRESSOR POWER =',F7.0,' TURBINE POWER =',F7.0,
     1 ' NET POWER =',F7.0)
      WRITE(6,6000)PWRCW,PWRTW,PWRNW
6000 FORMAT('          IN WATTS  ',F7.0,'                ',F7.0,
     1 '            ',F7.0)
      WRITE(6,7000)PWRCH,PWRTH,PWRNH
7000 FORMAT('     IN HORSEPOWER  ',F9.2,'              ',F9.2,
     1 '          ',F9.2)
      STOP
      END
```

```
&AUTOCC
    TAMB=90.,
    TSUP=40.,
    TREC=75.,
    ETAC=1.,
    ETAT=1.,
    DTCL=0.,
    DTHT=0.,
    DTRG=10.,
    QREF=12000.,
    CAY=1.40
```

APPENDIX B

ORNL MATHEMATICAL MODEL FOR TE MAC SYSTEM

STUDY OF THERMOELECTRIC TECHNOLOGY FOR AUTOMOBILE AIR CONDITIONING

B. Mathiprakasam and P. Heenan
Midwest Research Institute, Kansas City, MO 64110

AND

V.C. Mei and F.C. Chen
Oak Ridge National Laboratory, Oak Ridge, TN 37831

An analytical study was conducted to determine the feasibility of employing thermoelectric (TE) cooling technology in automobile air conditioners. The study addressed two key issues — power requirements and availability of thermoelectric materials. In this paper, a mathematical model was developed to predict the performance of TE air conditioners and to analyze power consumption. Results show that the power required to deliver a cooling capacity of 4 kW (13,80 Btu/h) in a 38°C (100°F) environment will be 9.5 kW electric. Current TE modules suitable for air conditioning are made of bismuth telluride. The element tellurium is expected to be in short supply if TE cooling is widely implemented for auto air conditioning; some options available in this regard were studied and presented in this paper.

Nomenclature

A	=	TE element cross-section area
C_a	=	specific heat of air
C_w	=	specific heat of liquid
COP_c	=	cooling coefficient of performance
H_a	=	product of air-side heat transfer coefficient and area
H_w	=	product of liquid-side heat transfer coefficient and area
h_a	=	enthalpy of air
I	=	electrical current flow
J_a	=	product of air-side mass transfer coefficient and area
k	=	thermal conductivity of a TE couple
l	=	TE element length
L_1	=	characteristic length of liquid channels in the TE heat rejector/cooler
L_2	=	characteristic length air passage in the TE heat rejector/cooler
M_a	=	air mass flow rate
M_w	=	liquid mass flow rate

Nomenclature (cont.)

N	=	total number of thermoelectric couples
P	=	power input to the TE system
NTU	=	number of transfer units
T_a	=	air temperature
T_c	=	TE module cool-side temperature
T_h	=	TE module hot-side temperature
T_w	=	liquid temperature
W_a	=	air moisture content
W_c	=	air moisture content at temperature T_c
X	=	space coordinate in the liquid flow direction
Y	=	space coordinate in the air flow direction
α	=	Seebeck effect of TE couple
ν	=	area/length ratio of TE element
ρ	=	TE couple electric resistivity

Subscripts

A	=	cooler
n	=	TE module negative element
p	=	TE module positive element or pump-side
R	=	heat rejector

Introduction

Increased awareness of the impact of chloroflurocarbons (CFCs) on the global environment has become the impetus in searching for alternative refrigerants and cooling methods for automotive air conditioning. Automotive air conditioning is one industry that heavily uses CFC compounds, and the leakage of CFCs from such air conditioners is substantial compared to that from stationary air conditioners. Therefore, the use of non-CFC air conditioners in automobiles is apparently becoming very important.

There are a number of air conditioning technologies that are not CFC-based. One of them is the well-known thermoelectric (TE) technology. The air conditioners employing this technology use some kind of specialized semiconductors instead of working fluids: thus, the core of a TE air conditioner is a completely solid-state device. In general, TE technology appears to possess characteristics that are favorable for automotive applications. These include (a) a match in power source — dc power is required to operate TE units, and the power system in automobiles is dc; (b) high reliability and easy maintainability — important for consumer products such as automobiles; (c) compact size; (d) quietness; and (e) easy capacity modulation. Factors that are unfavorable to TE technology include (a) relatively low efficiency (TE units' efficiency is lower than that of CFC-based units, yet is very comparable to that of many other non-CFC units) and (b) availability of TE materials to meet the quantity of production required for auto air conditioning.

Program Objectives

The development of TE air conditioners for automobile applications will be a multiphase, multiyear program. This study addressed only the first phase of this effort — a feasibility study. The objectives of this phase of the program were (a) to design a conceptual TE air conditioner suitable for automobiles, (b) to determine a set of design conditions applicable for a typical compact car, (c) to calculate the power requirements to operate the TE air conditioner using the existing computer design tools, and (d) to investigate material availability issues.

The conceptual design of a TE air conditioner included the formulation of a schematic representing various components of the system and the description of the system operation. The determination of a set of design conditions included the review of literature and selection of appropriate values for quantities such as cooling load, ambient temperature, etc. The power requirements portion of the study included the use of the existing computer model to estimate the power required to run the air conditioner. The material availability study included the collection of data on the current rate of production of TE modules and the impact on future production should these modules also be used in automobile air conditioners.

Description of a Conceptual System

The conceptual TE system has four essential components: a dc generator, a blower, a cooler, and a heat rejector. The schematic of the TE air conditioner system is shown in Fig. 1. The dc generator is where the compressor of a conventional freon system would be located. This high-voltage dc generator (voltage depends on the number of TE modules) is driven directly by the engine to supply the necessary dc power to the TE modules. A blower is used, as in the conventional CFC system, to pump the air to be conditioned; this stream of air is called "process air" in this study. The process air is either the returning interior air or a mixture of fresh and interior air. The blower draws process air, pumps it through the cooler, and finally sends it back to the car interior via several vents.

The cooler is located where the evaporator of the current CFC system would be located. This unit is a thermoelectric solid state device having several TE modules. It removes heat and moisture from the process air using dc power, and rejects heat to a transfer fluid to be used in the system. The transfer fluid is a mixture of ethylene glycol and water, which is the same as that used in automobile radiator fluid. The last component is the heat rejector. This unit is located where the condensing unit of the CFC system would be placed. The heat rejector is also a thermoelectric device capable of removing heat from the transfer fluid and rejecting it to the ambient air.

The flow rate of process air and the mix of interior/outside air can be controlled in the same manner as in the existing air conditioning system. The temperature of air exiting the vents, however, controlled by regulating the dc power applied to the cooler and/or the heat rejector.

Mathematical Model

The system schematic is shown in Fig. 1. The cooling system is composed of two cross-flow thermoelectric - liquid (water/ethylene-glycol mixture) heat exchangers, a heat rejector, and a cooler (heat absorber). A liquid circulating pump is also included. Based on the energy balance of the heat transfer medium, air, and liquid (water/ethylene-glycol mixture), the following mathematical model can be formed.

Heat Rejector:

- Liquid side —

$$-M_W C_{WR} L_{1R} \frac{\partial T_{WR}}{\partial X} = H_{WR} (T_{WR} - T_{CR}) , \text{ and} \tag{1}$$

$$-M_W C_{WR} L_{1R} \frac{\partial T_{WR}}{\partial X} = N \left[\alpha T_{CR} I_R - \frac{0.5 I_R^2 \rho}{\nu} - k\nu (T_{hR} - T_{CR}) \right] , \tag{2}$$

where

$$k\nu = k_p A_p / l_p + k_n A_n / l_n , \text{ and}$$

$$\rho / \nu = \rho_p l_p / A_p + \rho_n l_n / A_n .$$

- Air side —

$$M_{aR} C_{aR} L_{2R} \frac{\partial T_{aR}}{\partial Y} = H_{aR} (T_{hR} - T_{aR}) , \text{ and} \tag{3}$$

$$M_{aR} C_{aR} L_{2R} \frac{\partial T_{aR}}{\partial Y} = \left[\alpha T_{hR} I_R + \frac{0.5 I_R^2 \rho_R}{\nu} - k\nu (T_{hR} - T_{CR}) \right] . \tag{4}$$

Cooler (heat absorber):

- Water side —

$$M_W C_{WA} L_{1A} \frac{\partial T_{WA}}{\partial X} = H_{WA} (T_{hA} - T_{WA}) , \text{ and} \tag{5}$$

$$M_W C_{WA} L_{1A} \frac{\partial T_{WA}}{\partial X} = N \left[\alpha T_{hA} I_A + \frac{0.5 I_A^2 \rho}{\nu} - k\nu (T_{hA} - T_{CA}) \right] . \tag{6}$$

- Air side —

$$- M_{aA} C_{aA} L_{2A} \frac{\partial T_{aA}}{\partial Y} = H_{aA} (T_{aA} - T_{cA}) , \tag{7}$$

$$-M_{aA}L_{2A}\frac{\partial h_{aA}}{\partial Y} = n\left[\alpha T_{cA}I_A - \frac{0.5I_A^2\rho_A}{v} - kv(T_{hA} - T_{cA})\right], \text{ and} \tag{8}$$

$$-M_{aA}L_{2A}\frac{\partial W_{aA}}{\partial Y} = J_{aA}(W_{aA} - W_{cA}) . \tag{9}$$

The system cooling COPs can be calculated by the following equation:

$$COP_c = \frac{\text{Cooling Capacity}}{P_A + P_R} . \tag{10}$$

The computer code was based on a previous study (Mei et al, 1989) modified for this application. Realistic TE material properties, as shown below, were used for the simulation.

Seebeck Coefficient

$$\alpha = 1.8 \text{ x } (2T + 1985)\ 10^{-7} \text{ volt/°C.}$$

Electrical Resistance

$$\rho = (6T + 1735)\ 10^{-6} \text{ ohm cm.}$$

Thermal Conductivity

$$k = 0.0324 \text{ watt/cm/°C.}$$

where

$$T = \frac{(T_h + T_c)}{2} .$$

The above TE property figures are for those typical off-the-shelf TE modules, including the Semiconductors, copper straps, and ceramic substrates.

Design Conditions

Based on a literature review of the cooling requirements of a typical automobile, a set of design conditions were selected to estimate the power requirements of the TE air conditioner.

Cooling Load. The paper published by Ruth [1975] contains the cooling requirement data for various car types, ambient weather conditions, driving conditions. His data, shown in Table 1, were considered for selecting the design cooling load. QA compact car was also chosen for this analysis. We considered the worst-case cooling load for ambient conditions of up to 38°C (100°F); the cooling needs at 43°C (110°F) ambient, were not considered for design since it was felt that the probability of an air conditioner operating under such ambient conditions would be extremely low. According to Ruth's data, a cooling requirement of 4.01 kW (13,680 Btu/h) is the worst case at 38°C (100°F) ambient; therefore, it was decided to choose a design cooling load of 4.01 kW (13680 Btu/h) at 38°C (100°F) ambient. The cooling requirement at 32°C (90°F) ambient is up to 4.17 kW (14,220 Btu/h) because TE efficiency increases at a lower ambient temperature, which is more than the chosen design value; however, the TE air conditioner designed to provide 4.01 kW (13,680 Btu/h) at 38°C (100°F) ambient will provide more than 4.17 kW (14,220 Btu/h) in a 32°C (90°F) environment.

State of interior air. Several investigators in the area of car air conditioning have used a design state of 25°C (77°F) at 60% relative humidity (RH) as the design value. This value seems very appropriate from the standpoint of the occupants' comfort. Therefore we decided to use this state as our design state of interior air.

State of process air at stage 1. Again per Ruth's data, a cooling requirement of 4.01 kW (13,680 Btu/h) applies when the system is operating under a 100% recirculating mode. Under this condition, the state of process air at stage 1 (see Fig. 1) should be the same as the state of interior air [25°C (77°F) and 60% RH]. The humidity ratio of this stream is 0.0119 gr water per gr dry air (0.0119 lb water per lb dry air).

State of Process air at stage 2. This is the state of the air at the entrance to the cooler. Because of the blower heat and the heat transmitted from the engine and picked up by the panel, the temperature at stage 2 is expected to be about 8.3°C (15°F) more than at stage 1. As such, we chose a design temperature at stage 2 of 25 + 8.3 = 33.3°C (77 + 15 = 92°F). The humidity ratio at stage 2, however, will be the same as stage 1. The RH of air at 33.3°C (92°F) dry bulb and 0.0119 humidity ratio is 37%; thus, the state of process air at stage 2 will be 33.3°C (92°F) and 37% RH. The enthalpy of process air at stage 2 is 81.97 kJ/kg (35.24 Btu/lb).

Process air flow rate. For current automotive air conditioners, the design man flow rate of process air varies from 386 to 567 kg/h (850 to 1250 lb/h)]. For our design, we have chosen 454 kg/h (1000 lb/h), which seems reasonable for a compact car.

State of process air at stage 3. Having known the total cooling load, the enthalpy of air at stage 1, and the mass flow rate, we calculated the enthalpy of air at stage 3, using

$$\text{Cooling} = \text{Mass flow rate (enthalpy at stage 2 - enthalpy at stage 3)}$$

The enthalpy of process air at stage 3 was thus found to be 50.14 kJ/kg (21.56 Btu/lb). From psychrometrics, this relates to an air state of 11°C (52°F) and 100% RH.

State of ambient air at stage 6. Just as we did while selecting the cooling requirements, we chose an ambient temperature of 38°C (100°F) as the design value at stage 6.

Transfer fluid temperature change is. The fluid used as the transfer fluid is the ethylene-glycol water mixture. This fluid is heated while passing through the cooler and cooled while passing through the heat rejector. Since both of these units will have a cross-flow configuration, first law of thermodynamics dictates that the temperature increase in the cooler (which is also equal to the temperature drop in the heat rejector, assuming no thermal losses in the line) should be as small as possible. Our estimate is that this increase in temperature should be limited to about 3 to 5.5°C (5 to 10°F). An increase of less than 3°C (5°F) will require an excessively large heat exchanger, and an increase of more that 5.5°C (10°F will make the TE system inefficient.

Volumetric flow rate of transfer fluid. The volumetric flow rate of transfer fluid depends on the amount of heat removed from the cooler and the temperature rise in the cooler. For the purpose of power analysis, we used three different flow rate values. 1.51, 1.89 and 2.27 m^3/h (400, 500, and 600 gal/hr). We estimate that we can achieve a COP of 1.5 in the cooler based on our past experience; this means that the heat to be removed in the cooler will be 4.01 kW + 2.67 kW = 6.68 kW (13,680 + 13,680/1.5 = 22,800 Btu/h). The heat capacity of the 50/50 ethylene-glycol/water mixture is about 0.989 $kW/m^3/°C$ (7.11 Btu/gal/°F). At 1.89 m^3/h (500 gal/h) flow rate, the temperature rise in the cooler will be 6.68/0.989/1.89 = 3.6°C (22,800/7.11/500 = 6.4°F), which is well within the acceptable range.

Number of transfer units (NTU) values. NTU is defined as the ratio of the total heat transfer rate (in Btu/h/°F) on any side of a heat transfer device to the heat capacity of the fluid (in Btu/h/°F). At this time, we estimate that we can design the cooler such that the NTU on the process air side will be about 6.0 and that on the transfer fluid side will be about 1.0. We also estimate that we can design the heat rejector such that the NTU on the transfer fluid side will be about 1.0 and that on the ambient air side about 0.9.

Power Analysis

A computer simulation of the TE air conditioner system was performed using the design conditions. The output from the computer included the cooler COP, heat rejector COP, overall COP, temperatures of transfer fluid at stages 4 and 5, and other information pertinent to the selection of TE modules.

The cooler COP is defined as the ratio between the useful cooling delivered to the process air and the electric power applied to the cooler. The heat rejector COP is defined as the ratio between the useful cooling delivered to the transfer fluid and the electric power applied to the heat rejector. The overall COP is defined as the ratio between the useful cooling delivered to the process air and the total electric power applied to both the cooler and the heat rejector.

Table 2 contains the values of different COPs mentioned above. Figure 2 shows the values of overall COP in graphical form. As can be seen from the table values, for a given flow rate of transfer fluid, the cooler COP decreases as the transfer fluid temperature at the cooler inlet is increased; at the same time, the rejector's COP increases. The overall COP attains a maximum value at some optimum value of transfer fluid temperature. In general, this optimum temperature is around 24°C (75°F).

For a given transfer fluid temperature at the cooler inlet, the cooler COP, rejector COP, and overall COP all increase as the flow rate of transfer fluid is increased. This suggests that the flow rate of the transfer fluid should be as high as is practical. This will reduce the temperature change

of the transfer fluid in the cooler (and in the rejector). Theoretically, a fluid with zero temperature change will offer the highest COP values. From this perspective, a phase change fluid (which will evaporate in the cooler and condense in the rejector) might be a better candidate than the chosen ethylene glycol.

At a flow rate of 2.27 m^3/h (600 gal/h) and 24°C (75°F), the analysis shows that an overall COP of 0.424 is achievable employing the TE technology. Based on the limited data available on conventional air conditioning systems, we project the COP of such systems to be in the area of 1.0. As such, the COP of air conditioners using TE technology appears to be low. However, we feel that this COP will still be competitive with other non-CFC-based systems. For a design cooling load of 4.01 kW (13680 Btu/h) at 38°C (100°F) and the associated COP of 0.4241, the power consumption will be 9.451 kW (12.67 hp). In a car with an engine power of, say, 120 to 130 hp, this represents a 10% power draw (CFC system power draw is about 7%).

Materials Availability

In order to produce TE air conditioners in large quantities, it is necessary to evaluate the availability of all of the materials that are required to build these systems. A basic unit consists of thermoelectric modules, aluminum sheets and tubes, and various aluminum fin materials. Since the aluminum parts are similar to those or existing air conditioning components and since aluminum is unlimited in supply for purposes of this evaluation, we need not consider these components. The TE modules, however, have limitations that must be explored in this evaluation.

A number of issues can influence the production ability of TE module fabricators. These key issues include, but are not limited to, raw materials availability, refined materials availability, materials cost, existing module production capacity, and the ability to increase module production capacity. These issues will be presented and discussed below. Much of this information was obtained from Melcor, Inc. (Mathiprakasam, 1991).

Four materials are used to make up the basic TE components. Bismuth and tellurium are the primary ingredients, and small portions of selenium and antimony are added in different proportions to create the N and P polarity of the resulting semiconductor materials. Of these four materials, bismuth, selenium, and antimony are widely available from multiple sources with considerable excess capacity potential at no increase in price. Only tellurium has a finite limit on availability with some cost dependency.

Tellurium is not practical to mine directly and is a by-product of other mining operations. The primary source of tellurium is the refining waste of copper, although tellurium is also present and recoverable from lead, silver, and gold refining wastes. Only copper mining is of significant quantity to be used as a practical source for tellurium. Additional demands for tellurium above that available from these sources will not affect these mining activities. The availability of tellurium is thus tightly keyed to copper industry demands.

The total production of tellurium from these sources amounts to about 363,000 kg (800,000 lb) of usable refined material per year. This amount has been extremely stable, and level of production is not affected significantly by anything known to date. TE and other semiconductor producers consume about 10% of this production with the remainder of the production consumed by steel and other metals industries as well as other minor chemical processes. The 10% consumed for semiconductors is largely for TE material production. The tellurium used for TE production must

be further refined to increase its purity. The other 90% is consumed as is from the initial refining process.

Actual modules produced today widely differ in size and type and use different volumes of materials. To provide numerical estimates of module production capacity, it is assumed that a 9.7-cm^2 (1.5-$in.^2$), 127-couple module is standard for potential use in automotive air conditioning. It is estimated that about 50 of these standard modules are made from about 1 lb of tellurium assuming large amounts of nonrefined copper wastes are generated and accepted. If more care is taken in production and the waste is further refined, it is estimated that this rate could increase to 100 standard modules per pound of tellurium. This increase in modules per pound will result in small but noticeable increases in cost for the end product as a result of increased labor and tellurium refining costs.

The standard module is smaller than the average TE module fabricated and sold today. Because of this, estimates for production rates of these standard modules will seem large when compared with actual production rates for the same consumption rate of tellurium. If we assume that the most efficient method of obtaining tellurium is employed to maximize the modules produced per pound, we can assume that 8 million of the standard modules can be fabricated with the same quantity of tellurium that produces 1.2 million various actual modules using today's methods.

Although the tellurium is available to fabricate as many as 8 million TE modules, the fabricator would need about 6 months to increase production to about 4 million modules a year by hiring, training and adding additional shifts to run the existing facility continuously. At this point, new facilities would have to be built to increase production, which could take as long as another year and would require stable long-term commitments from the end user to make it practical for the fabricator. All of this expansion would not influence TE module price significantly. In fact, if this demand were real, the fabricator would move more quickly to automate the plant, which would increase production with no immediate increase in final TE module cost and no long-term reductions in TE module costs.

If the maximum number of TE modules were limited to the 10% of available tellurium, the number of automotive TE air conditioning units that could be built would be restricted. At this time, it appears that about 400 standard TE modules would be required per vehicle if the TE air conditioner were fabricated to provide the same level of cooling as current vapor-cycle AC units. If all 8 million modules fabricated were exclusively available for this effort, about 20,000 vehicles could be fitted with TE air conditioners per year.

The TE market, however, is not limited to the 10% available tellurium: almost all other tellurium users to date use the least refined product, and other materials could easily be used as a substitute for tellurium. Because extra refining is required for the tellurium used in TE production, it is a value-added process to the refiner. Since refiners make more profit selling to TE producers, TE is a preferred market. Even if TE producers wanted almost all of the tellurium, the refiners would be more than willing to accommodate them. If existing users then still pursued buying tellurium, the price could be driven up, but it would be limited to the cost of substituting another material for their processes. Even if the price of tellurium doubled, the price of TE modules would only be increased by about 25%. Tellurium availability, therefore appears to be a limited problem with easy solutions.

A practical assumption about the maximum amount of tellurium available for TE air conditioner production will allow for about 80% of the mined tellurium to be dedicated. The 10%

currently used will still be used for TE module production, with 10% being left for other non-TE uses. Based upon these assumptions, 290,000 kg (640,000 lb) of tellurium will be available exclusively for producing TE modules for automotive AC application. This means that 64 million modules can be fabricated, which translates to fitting 160,000 vehicles with TE air conditioners.

Finally, fitting TE air conditioners on more than 160,000 vehicles would seem challenging since the tellurium needed is keyed to a potentially required increase in copper production. If this scenario were a reality, tellurium production capacity might be increased, but innovation here would only be possible if the profits were sufficiently high to pursue alternate sources outside of refined mining wastes. At this point, costs for additional tellurium could escalate dramatically. It is not possible to estimate these potential cost impacts at this time with currently available information.

Conclusions

The first phase of the program on the development of TE air conditioners for automobiles — a study of the feasibility of employing TE technology — was completed. Two key issues were addressed in this phase. It was found that a TE air conditioner delivering a total cooling of 4.01 kW (13,680 Btu/h) will require a total dc power of about 9.5 kW, which is equivalent to a cooling COP of 0.42. This power also represents about 10% of the total power of the engine. The power consumption of TE air conditioners seems higher than that of conventional CFC-based air conditioning systems. On the material side, it was found that one of the elements used to make TE modules — tellurium — will have availability problems. Current production of TE modules can be increased by about 10 times without a price impact. Beyond that point, the cost of TE modules will be dependent on the quantity.

Acknowledgments

This work was a part of the Transportation Environmental Control Activities at Oak Ridge National Laboratory sponsored by the CFC Reduction Program of the Office of Transportation Technologies, U.S. Department of Energy, under Contract No. DE-AC05-84OR21400 with Martin Marietta Energy Systems, Inc.

References

Mathiprakasam, B., Midwest Research Institute, Kansas City, MO, personal communication with Melcor, Inc., Trenton, NJ, 1991.

Mei, V. C., Chen, F. C., and Mathiprakasam, B., "Comparison of Thermoelectric and Vapor Cycle Technologies for Ground Water Heat Pump Application," ASME J of Solar Eng. V (III), pp. 353–357, Nov. 1989.

Ruth, D.W., "Simulation Modeling of Automobile Comfort Cooling Requirements," ASHRAE Journal, May (1975), pp. 53-55.

Table 1 - AUTOMOTIVE COOLING REQUIREMENTS

Car Type	Ambient Condition °C (°F) / RH	City Driving (Cool Down) No Outside Air kW (Btu/h)	City Driving 30 mph 100% Outside Air kW (Btu/h)	Highway Driving 60 mph 100% Outside Air kW (Btu/h)
Subcompact	32 (90) / 50%	3.59 (12250)	3.49 (11910)	3.77 (12850)
	38 (100) / 20%	3.47 (11830)	3.20 (10930)	3.41 (11640)
	43 (110) / 5%	3.86 (13170)	3.79 (12950)	4.08 (13940)
Compact	32 (90) / 50%	4.14 (14140)	4.17 (14220)	4.14 (14120)
	38 (100) / 20%	4.01 (13680)	3.76 (12840)	3.73 (12730)
	43 (110) / 5%	4.42 (15100)	4.51 (15380)	4.48 (15280)
Standard	32 (90) / 50%	5.06 (17270)	5.16 (17620)	5.13 (17520)
	38 (100) / 20%	4.91 (16770)	4.64 (15830)	4.61 (15730)
	43 (110) / 5%	5.37 (18320)	5.55 (18950)	5.52 (18850)

TABLE 2 - COEFFICIENT OF PERFORMANCE

Transfer Fluid		Cooler	Rejector	Overall
Flow Rate m^3/h (gal/h)	Cooler Inlet Temperature °C (°F)	COP	COP	COP
1.51 (400)	18 (65)	3.318	0.460	0.3197
	21 (70)	2.363	0.546	0.3300
	24 (75)	1.781	0.633	0.3303
	27 (80)	1.389	0.721	0.3222
	29 (85)	1.108	0.806	0.3064
1.89 (500)	18 (65)	3.836	0.516	0.3696
	21 (70)	2.686	0.613	0.3830
	24 (75)	2.009	0.718	0.3872
	27 (80)	1.564	0.833	0.3836
	29 (85)	1.250	0.958	0.3732
2.27 (600)	18 (65)	4.234	0.548	0.4010
	21 (70)	2.925	0.653	0.4171
	24 (75)	2.173	0.769	0.4241
	27 (80)	1.687	0.901	0.4236
	29 (85)	1.348	1.050	0.4164

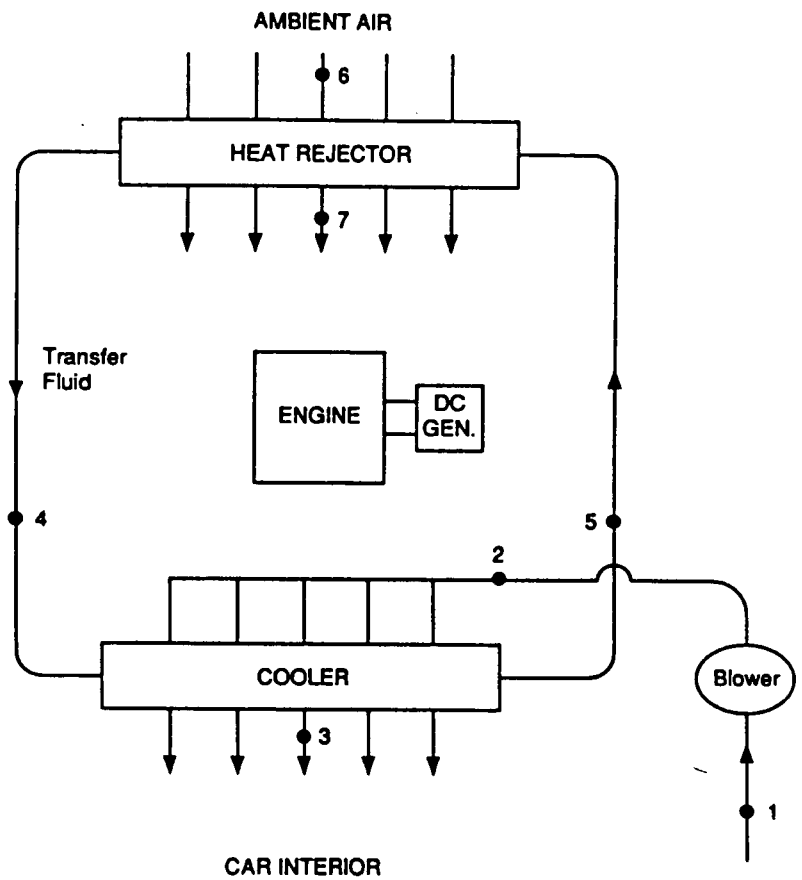

Fig. 1. Schematic of a TE automobile air conditioning system.

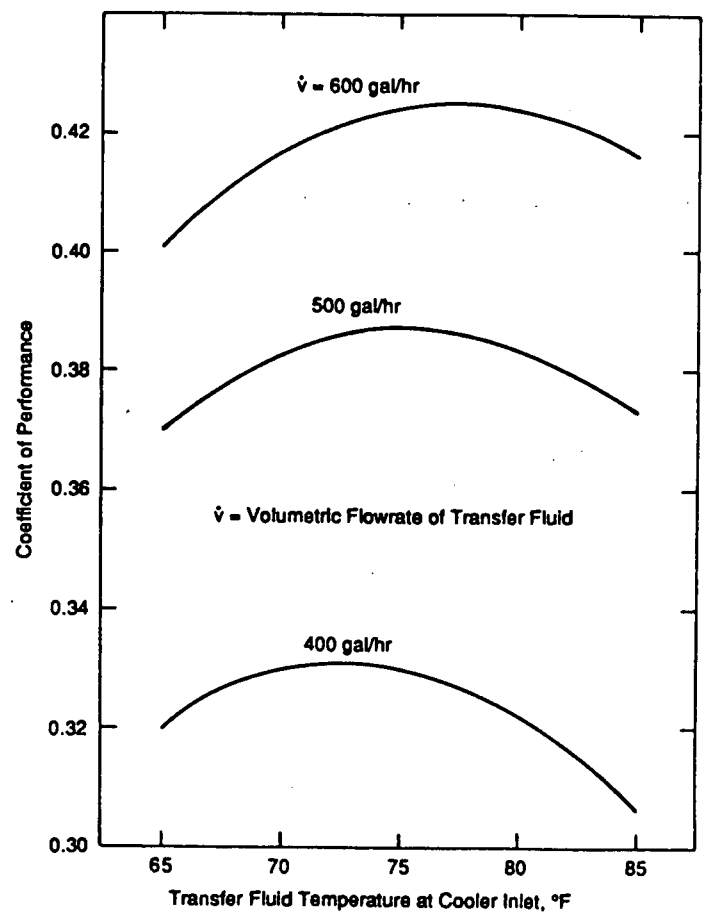

Fig. 2. System perofrmance as a function of transfer fluid cooler inlet temperature.

APPENDIX C

ORNL COMPUTER CODE FOR EJECTOR COOLING SYSTEM

```
C THIS PROGRAM PREDICTS EJECTOR PERFORMANCE USING CERTAIN IDEALIZED
C MODELS FOR PERFECT GAS OR REAL FLUID OBEYING DOWNING PROPERTY
C EQUATIONS (FOR EXAMPLE, MOST FREONS) FOR CARNOT, IDEAL EJECTOR, OR
C CONSTANT PRESSURE MIXING SITUATIONS
      IMPLICIT REAL *8(A-H,O-Z)
      DIMENSION A(43),Z(43,4),R(4)
C
C**********************REFRIGERANT THERMODYNAMIC CONSTANTS****************
C
      DATA(Z(I,1),I=1,43)/459.67D0.42.14702865D0,-4344.343807D0,
     +-12.84596753D0,4.0083725D-3,0.0313605356D0,862.07D0,4.50D0,
     +848.07D0,0.00190D0,580D0,0.078117D0,-35.76999D0,1.318523D-3,
     +-3.126759D0,1.220367D0,4.875121D-5,-0.025341D0,0D0,-1805062D-6,
     +1.687277D-3,-1.478379D-4,2.448303D-8,-2.358930D-5,0D0,-9.472103D4,
     +1.057504D8,0D0,0.023815D0,2.798823D-4,-2.123734D-7,5.999018D-11,
     +-336.80703D0,50.5418D0,-0.0918395D0,34.57D0,57.63811D0,43.6322D0,
     +-42.82356D0,36.70663D0,0D0,0D0,137.38D0/
      DATA(Z(I,2)I=1,43)/459.7D039.88381727D0,-3436.632228D0,
     +-12.47152228D0,4.73044244D-3,0D0,0D0,5.475D0,693.3D0,6.5093886D-3,
     +0D0,8.8734D-2,-56.7627671D0,1.59434848D-3,-3.40972713D0,
     +1.31139908D0,1.87961843D-5,6.02394465D-2,0D0,0D0,-5.4873701D-4,
     +-2.54390678D-5,3.468834D-9,0D0,0D0,0D0,0D0,0D0,0D0,8.0945D-3,
     +3.32662D-4,-2.413896D-7,6.72363D-11,0D0,39.556551D0,-1.6537936D-2,
     +34.84D0,53.341187D0,0D0,18.69137D0,0D0,21.98396D0,-3.150994D0,
     +120.93D0/
      DATA(Z(I,3),I=1,43)/459.6D0,42.7908D0,-4261.34D0,-13.0295D0,
     +3.9851D-3,0D0,0D0,0D0,812.9D0,0D0,0D0,0.10427D0,0D0,4.6421D-3,
     +-7.316D0,0D0,3.593D-4,-0.20382376D0,0D0,0D0,0D0,0D0,0D0,0D0,0D0,0D0,
     +0D0,0D0,0D0,0.0427D0,1.40D-4,0D0,0D0,0D0,76.24708637D0,
     +-0.11061431527D0,116.37962D0,-0.03106808D0,-0.0000501D0,0D0,0D0,
     +0D0,0D0,102.92D0/
      DATA(Z(I,4),I=1,43),459.6D0,33.0655D0,-4330.98D0,-9.2635D0,
     +2.0539D-3,0D0,0D0,0D0,877.0D0,0D0,0D0,0.05728D0,0D0,2.618D-3,
     +-4.035D0,0D0,5.00D-5,-0.0214D0,0D0,0D0,0D0,0D0,0D0,0D0,0D0,0D0,0D0,
     +0D0,0D0,0.07963D0,1.159D-4,0D0,0D0,0D0,25.198D0,-0.40552D0,
     +122.872D0,-0.0128D0,-0.0000636D0,0D0,0D0,0D0,0D0,0D0,187.39D0/
      DATA WB/4H B  /
      DATA WB1S/4H B1S/
      DATA WB1/4H B1 /
      DATA WE/4H E  /
      DATA W2/4H 2  /
      DATA WMS/4H MS /
      DATA W3S/4H 3S /
      DATA W3/4H 3  /
      DATA WC/4H C  /
      DATA R/3H 11,3H 12,3H 21,3H113/
      G=32.174D0
      W=778D0
      NR=4
```

```
      CALL CNST(Z,NR,A)
C     GO TO 901
C     DO 900 N=-40,353
C     T=N
C     P=PSAT(T,A)
C     VL=1D0/DNSL(T,A)
C     VG=VVAP(TP,A)
C     HG=HSUP(T,VG,P,A)
C     HFG=HLAT(T,VG,P,VL,A)
C     HL=HG-HFG
C     SG=SSUP(T,VG,A)
C     SL=SG-HFG/(T+A(1))
C     WRITE(6,9000 T,P,VL,VG,HL,HFG,HG,SL,SG
C9000 FORMAT(F5.0,F7.3,F8.5,F6.3,F6.2,F6.2,F7.2,F7.4,F7.4)
C 900 CONTINUE
C
C**********************TEMPERATUREANDEFFICIENCYINPUTS*******************
C
C 901 TB=200D0
C      TE=50D0
C      TC=110D0
C      ETAB=1D0
C      ETAE=1D0
C      ETAC=1D0
      READ (*,*)PB,TB,TE,TC,ETAB,ETAE,ETAC
C
C********************** SOURCE AND SINK STATE PROPERTIES *******************
C
      IF((TB+A(1)).LT.A(9)) PB=PSAT(TB,A)
C      WRITE(6,9125)
9125 FORMAT(' CALCUALTED ONE VARIABLE')
      PE=PSAT(TE,A)
      PC=PSAT(TC,A)
      VB=VVAP(TB,PB,A)
C      WRITE 6,9125)
      VE=VVAP(TE,PE,A)
      VC=VVAP(TC,PC,A)
      HB=HSUP(TB,VB,PB,A)
C      WRITE(6,9125)
      HE=HSUP(TE,VE,PE,A)
      HC=HSUP(TC,VC,PC,A)
      SB=SSUP(TB,VB,A)
C      WRITE(6,9125)
      SE=SSUP(TE,VE,A)
      SC=SSUP(TC,VC,A)
      WRITE(6,8000) TB,PB,VB,HB,SB
      WRITE(6,8000) TE,PE,VE,HE,SE
      WRITE(6,8000) TC,PC,VC,HC,SC
8000 FORMAT(F7.2,F7.3,F8.5,F7.2,F7.4)
```

```
C
C************************** IDEAL EJECTOR CALCULATION ************************
C
      PMS=PC
      SLBC=(HB-HC)/(SB-SC)
      SLBE=(HB-HE)/(SB-SE)
      IF(SLBC.GT.SLBE) GO TO 80
      TMS=TC
      DO 400 L=1,20
      IF(L.EQ.2) TMS=TC+1D0
      VMS=VVAP(TMS,PMS,A)
      HMS=HSUP(TMS,VMS,PMS,A)
      SMS=SSUP(TMS,VMS,A)
      W1L=(HB-HMS)/(HMS-SE)
      W1R=(SB-SMS)/(SMS-SE)
      FN3=W1L-W1R
      WRITE(6,3000 HB,HE,HMS,SB,SE,SMS,TMS,W1L,W1R
3000 FORMAT(3F7.2,3F7.4,F7.2,2F14.9)
      IF(L.EQ.1) GO TO 390
      IF(DABS(FN3-FN3O).LT.1D-9) GO TO 410
      DER3=(FN3-FN3O)/(TMS-TMSO)
 390 TMSO=TMS
      FN3O-FN3
      IF(L.EQ.1) GO TO 400
      TMS=TMS-FN3/DER3
 400 CONTINUE
      WRITE(6,9903)
9903 FORMAT(' EFFICIENCY ITERATION DID NOT CONVERGE')
 410 CONTINUE
      GO TO 70
  80 TMS=TC
      TCR=TC+A(1)
      SMS=((SE*HB-SB*HE)/(SB-SE)-SC*TCR+HC)/(SLBE-TCR)
      VCL=1D0/DNSL(TC,A)
      HCLV=HLAT(TC,VC,PC,VCL,A)
      SCL=SC-HCLV/TCR
      XMS=(SMS-SCL)/(SC-SCL)
      VMS=XMS*VC+(1D0=XMS)*VCL
      HCL=HC-HCLV
      HMS=XMS*HC+(1D0-XMS)*HCL
      W1L=(HB-HMS)/(HMS-HE)
C
C*************************** NOZZLE EXIT STATE PROPERTIES ********************
C
  70 PB1S=PE
      IF(SB.LT.SE) GO TO 10
      TB1S=TE
      DO 100 I=1,20
```

```
      IF(I.EQ.2) TB1S=TE+1D0
      VB1S=VVAP(TB1S,PB1S,A)
      SB1S=SSUP(TB1S,VB1S,A)
      FN=SB1S-SB
      IF(I.EQ.1) GO TO 90
      IF(DABS(FN-FNO).LT.1D-9) GO TO 110
      DER=(FN-FNO)/(TB1S-TB1SO)
   90 TB1SO=TB1S
      FNO=FN
      IF(I.EQ.1) GO TO 100
      TB1S=TB1S-FN/DER
  100 CONTINUE
      WRITE(6,9900)
 9900 FORMAT(" NOZZLE EXIT ITERATION DID NOT CONVERGE')
  110 CONTINUE
      HB1S=HSUP(TB1S,VB1S,PB1S,A)
      WRITE(6,8000) TB1S,PB1S,VB1S,HB1S,SB1S
      GO TO 20
   10 SB1S=SB
      TB1S=TE
      VEL=1D0/DNSL(TE,A)
      HELV=HLAT(TE,VE,PB1S,VEL,A)
      SEL=SE-HELV/(TE+A(1))
      XB1S=(SB-SEL)/(SE-SEL)
      VB1S=XB1S*VE+(1D0-XB1S)*VEL
      HEL=HE-HELV
      HB1S=XB1S*HE+(1D0-XB1S)*HEL
   20 HB1=HB-ETAB*(HB-HB1S)
      PB1=PE
      IF(HB1.GT.HE) GO TO 30
      TB1=TE
      XB1=(HB1-HEL)/HELV
      VB1=HB1*VE+(1D0-XB1)*VEL
      SB1=HB1*SE+(1D0-XB1)*SEL
      GO TO 40
   30 TSB1=TE
      CALL TSUP(PB1,HB1,TSB1,A,TB1,VB1,SB1)
   40 WRITE(6,8000) TB1,PB1,VB1,HB1,SB1
      WRITE(6,2000) VEL,HELV,SEL,XB1S,XB1,HEL,HB1S,HB1
 2000 FORMAT(8D9.3
C
C********************* CONSTANT PRESSURE MIXING ITERATION *******************
C
      P2=PE
      FLAG2=-0.1D0
      VAR2=TE
  101 IF((VAR2-TE).LT.0D0) FLAG2=0.1D0
      IF(FLAG2.GT.0D0) VAR2=1D0
      DO 200 J=1,20
```

```
      IF(J.EQ.2) VAR2=VAR2-FLAG2
      IF(FLAG2.LT.0D0) CALL VSHFPT(VAR2,P2,A,V2,S2,H2.X2.T2)
      IF(FLAG2.GT.0D0) CALL VSHFPT(VAR2,P2,TE,A,V2,S2,H2,T2)
      P3S=PC
      T3S=TC
      DO 300 K=1,20
      IF(K.EQ.2) T3D=TC+1D0
      V3S=VVAP(T3S,P3S,A)
      S3S=SSUP(T3S,V3S,A)
      H3S=HSUP(T3S,V3S,P3S,A)
      WRITE(6,8000) T3S,P3S,V3S,H3S.S3S
      FN1=S3S-S2
      IF(K.EQ.1) GO TO 290
      IF(DABS(FN1-FN1O).LT.1D-9) GO TO 310
      DER1=(FN1-FN1O)/(T3S-T3SO)
  290 T3SO=T3S
      FN1O=FN1
      IF(K.EQ.1) GO TO 300
      T3S=T3S-FN1/DER1
  300 CONTINUE
      WRITE(6,9901)
 9901 FORMAT(' DIFFUSER COMPRESSION ITERATION DID NOT CONVERGE')
  301 CONTINUE
      SDL=ETAB*ETAC*(HB-HB1S)
      SDR=(H3S-H2)*((HB-HE)/(H2*(1D0-1D0/ETAC)+H3S/ETAC-HE))**2D0
      FN2=SDL-SDR
      IF(J.EQ.1) GO TO 190
      IF(DABS(FN2-FN2O).LT.1D-6) GO TO 210
      DER2=(FN2-FN2O)/(VAR2-VAR2O)
  190 VAR2O=VAR2
      FN2O=FN2
      WRITE(6,5000) VAR2,FN2,DER2,SDL,SDR
 5000 FORMAT(5D10.3)
      IF(J.EQ.1) GO TO 200
      VAR2=VAR2-FN2/DER2
      IF(((VAR2-TE).LT.0D0).AND.(FLAG2.LT.0D0)) GO TO 101
  200 CONTINUE
      WRITE(6,9902)
 9902 FORMAT(' CONSTANT PRESSURE MIXING ITERATION DID NOT CONVERGE')
  210 CONTINUE
C
C************************ STATE 3 PROPERTY CALCULATIONS *********************
C
      H3=H2+(H3S-H2)/ETAC
      P3=PC
      TS3=TC
      CALL TSUP(P3,H3,TS3,A,T3,V3,S3)
C
```

```
C***************************** VELOCITY CALCULATIONS ************************ C
      UB=0D0
      UE=0D0
      UC=0D0
      UB1S=(2D0*(HB-HB1S*G*W)**0.5D0
      UB1=(2D0*(HB-HB1)*G*W)**0.5D0
      U2=(2D0*(H3-H2)*G*W)**0.5D0
      UMS=0D0
      U3S=0D0
      U3=0D0
C
C*************************** SONIC VELOCITY CALCULATIONS ********************
C
      CB1S=SONU(TB1S,VB1S,SB1S,A)
      CB1=SONU(TB1,VB1,SB1,A)
      C2=SONU(T2,V2,S2,A)
      CMS=SONU(TMS,VMS,SMS,A)
      C3S=SONU(T3S,V3S,S3S,A)
      C3=SONU(T3,V3,S3,A)
C
C***************************** MACH NUMBER CALCULATIONS *********************
C
      EMB1S=UB1S/CB1S
      EMB1=UB1/CB1
      EM2=U2/C2
      EMMS=UMS/CMS
      EM3S=U3S/C3S
      EM3=U3/C3
      WRITE(6,6900) R(NR)
6900 FORMAT(' WORKING FLUID IS REFRIGERANT',3A)
      WRITE(6,6800) ETAB
6800 FORMAT(' NOZZLE EFFICIENCY=',F5.3)
      WRITE(6,6700) ETAC
6700 FORMAT(' DIFFUSER EFFICIENCY='F5.3)
      WRITE(6,7100)
7100 FORMAT('    T     P     V     H     S     U     C     M')
      WRITE(6,7000) TB,PB,VB,HB,SB,UB,WB
      IF(HB1S.LE.HE) WRITE(6,7200)TB1S,PB1S,VB1S,HB1S,SB1S,UB1S,WB1S
7200 FORMAT(F7.2,F7.3,F8.5,F7.2,F7.4,F8.2,'    TWO-PHASE   ',A4
      IF(HB1S.GT.HE) WRITE(6,7500)TB1S,PB1S,VB1S,HB1S,SB1S,UB1S,CB1S,&EMB1S,WB1S
      IF(HB1.LE.HE) WRITE(6,7200)TB1,PB1,VB1,HB1,SB1,UB1,WB1
      IF(HB1.GT.HE) WRITE(6,7500)TB1,PB1,VB1,HB1,SB1,UB1,CB1,EMB1,WB1
      WRITE(6,7000) TE,PE,VE,HE,SE,UE,WE
      IF(H2.LE.HE) WRITE(6,7200)T2,P2,V2,H2.S2.U2.W2
      IF(H2.GT.HE) WRITE(6,7500)T2,P2,V2,H2.S2.U2.C2,EM2,W2
      IF(HMS.LE.HC) WRITE(6,7200)TMS,PMS,VMS,HMS,SMS,UMS,WMS
      IF(HMS.GT.HC) WRITE(6,7500)TMS,PMS,VMS,HMS,SMS,UMS,CMS,EMMS,WMS
      WRITE(6,7500) T3S,P3S,V3S,H3S,S3S,U3S,C3S,EM3S,W3S
      WRITE(6,7500) T3,P3,V3,H3,S3,U3,C3,EM3,W3
```

```
      WRITE(6,7000) TC,PC,VC,HC,SC,UC,WC
7000 FORMAT(F7.2,F7.3,F8.5,F7.2,F7.4,F8.2'              ',A4)
7500 FORMAT(F7.2,F7.3,F8.5,F7.2,F7.4,F8.2,F8.2,F6.3,A4)
      ENTR=(ETAC*(HB-H2)-(H3S-H2))/(ETAC*(H2-HE)+(H3S-H2))
      ENTCC=(TB-TC)/(TC-TE)
      WRITE(6,6000)
6000 FORMAT(' SECONDARY/PRIMARY MASS ENTRAINMENT RATIO')
      TBE=(TB+A(1))/(TE+A(1))
      BB=1D0+TBE
      CAY=1.12D0
      EXS=(CAY-1D0)/CAY
      CC=TBE*(1D0-ETAB*(1D0-(PE/PB)**EXS)*(1D0+ETAC/((PC/PE)**EXS-1D0)))
      ENTRI=(-.BB+(BB*BB-4D0*CC)**0.5D0)/2D0
      WRITE*6,6200) ENTCC
6200 FORMAT(' PERFECT GAS CARNOT BASED ON TB, TE, AND TC',F7.4)
      WRITE(6,6300)W1L
6301 FORMAT(' IDEAL EJECTOR BASED ON TB, TE, AND PC       ',F7.4)
      WRITE(6,6302)ENTR
6302 FORMAT(' CONSTANT PRESSURE MIXING CASE AT PE         ',F7.4)
      WRITE(6,6100) ENTRI
6100 FORMAT(' PERFECT GAS MIXING AT CONSTANT PRESSURE PE',F7.4)
      WRITE(6,6101) CAY
6101 FORMAT('    (SPECIFIC HEAT RATIO = ',F4.2,')')
      VLC=1D0/DNSL(TC,A)
      H5=HC-HLAT(TC,VC,PC,VLC,A)
      H9=H5+144D0*VLC*(PB-PC)/778D0
      COP=ENTR*(HE-H5)/(HB-H5)
      COPC=(TB-TC)*(TE+459.67D0)/(TC-TE)/(TB+459.67D0)
      COPI=W1L*(HE-H5)/(HB-H5)
      WRITE(6,4300)
4300 FORMAT(' COOLING COEFFICIENT OF PERFORMANCE')
      WRITE(6,4301)COPC
4301 FORMAT(' CARNOT BASED ON TB, TE, AND TC          ',F7.4)
      WRITE(6,4302)COPI
4302 FORMAT(' IDEAL EJECTOR BASED ON TB, TE, AND PC ',F7.4)
      WRITE(6,4303)COP
4303 FORMAT(' CONSTANT PRESSURE MIXING CASE AT PE   ',F7.4)
      WRITE(6,4400) I,J,K,H5,H9,COP
4400 FORMAT(3I4,2F8.3,F6.3)
4500 CONTINUE
      STOP
      END
```

APPENDIX D

SAMPLE CALCULATION OF A METAL HYDRIDE COOLING SYSTEM

First law efficiency: $\frac{\Delta H_L^L}{\Delta H_H^H}$

where ΔH_L^L represents cooling capacity and ΔH_H^H represents energy input.

Carnot efficiency: $\frac{T_L(T_H - T_M)}{T_H(T_M - T_L)}$

For a metal hydride cooling system operated at:

T_L = 50°F or 510°K	(Evaporator)
T_M = 100°F or 560°K	(Ambient) and
T_L = 700°F or 1,160°K	(Waste Heat)

Carnot Efficiency: $\frac{510\ (600)}{1160\ (50)} = 5.28$

For $LaNi_5Al_{0.5}$, ΔH_H^H = 11,774 Btu/lb-Mole

For $LaNi_5$, ΔH_L^L = 11,664 Btu/lb-Mole

First law efficiency: $\frac{11{,}664}{11{,}774} = 0.99$ (thermal)

% of Carnot cycle: $\frac{0.99}{5.28} = 18.8$

or

First law efficiency is only 18.8% of Carnot efficiency.

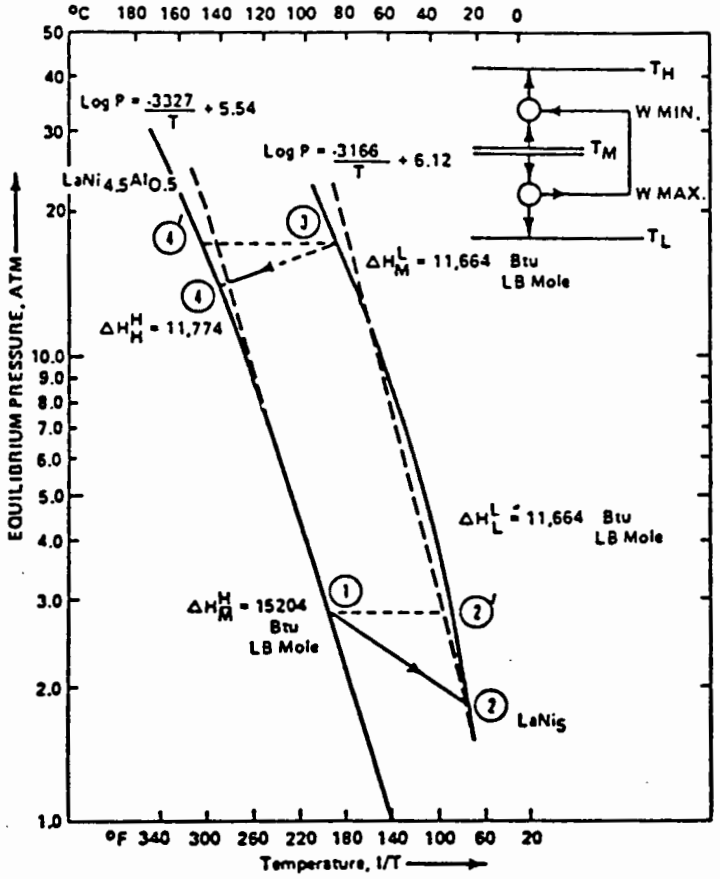

Fig. D1. Metal hydride cooling cycle.

INTERNAL DISTRIBUTION

1.	V. D. Baxter	35.	H. A. McLain
2.	J. B. Cannon	36-45.	V. C. Mei
3.	R. S. Carlsmith	46.	D. E. Reichle
4-13.	F. C. Chen	47.	M. W. Rosenthal
14.	G. E. Courville	48.	M. P. Ross
15.	F. A. Creswick	49.	J. R. Sand
16.	R. C. DeVault	50.	R. E. Saylor
17.	P. D. Fairchild	51.	R. B. Shelton
18.	S. K. Fischer	52.	J. N. Stone
19.	W. Fulkerson	53.	A. W. Trivelpiece
20.	D. L. Greene	54.	J. C. Wang
21.	G. R. Hadder	55.	T. J. Wilbanks
22.	E. L. Hillsman	56.	A. Zaltash
23.	J. O. Kolb	57-58.	Laboratory Records Dept.
24.	M. A. Kuliasha	59.	Laboratory Records - RC
24-33.	D. M. Kyle	60.	ORNL Patent Office
34.	P. J. Lewis	61.	ORNL Public Relations Office

EXTERNAL DISTRIBUTION

62. W. J. Biermann, 45 Foxcroft Drive, Fayetteville, NY 13066
63. B. Bills, Chrysler Corporation, CIMS 463-00-00, 30900 Stephenson Highway, Madison Heights, MI 48071
64. B. G. Buchanan, Computer Science Department, University of Pittsburgh, 206 Mineral Industries Building, Pittsburgh, PA 15260
65. A. Burke, EG&G Idaho, P. O. Box 1625, Idaho Falls, ID 83415-3525
66. V. P. Carey, Department of Mechanical Engineering, University of California, Berkeley, CA 94720
67. D. C. Cassidy, General Motors Technical Center, Engineering Building (E2-HVAC), 30200 Mound Road, Warren, MI 48090-9010
68. N. J. Crateau, Libbey-Owens-Ford Company, 811 Madison Avenue, Toledo, OH 46395
69. J. W. Cooke, DOE-OR
70. T. Davis, Department of Energy, Intellectual Property Counsel, 9800 South Cass Avenue, Argonne, IL 60439
71. P. DePaulis, Chrysler Corporation, CIMS 463-00-00, 30900 Stephenson Highway, Madison Heights, MI 48071
72. J. Dieckman, Arthur D. Little, Inc., 25 Acorn Park, Cambridge, MA 02140

73. T. C. Edwards, Innovation Technologies, Inc., 1426 Gleneagles Way, Rockledge, FL 32955
74. R. L. Egli, DOE-OR
75. R. Elbourini, Calsonic Technical Center, 10232 South 51st Street, Phoenix, AZ 85044
76. A. A. Frank, Professor, Department of Mechanical Engineering, University of California at Davis, Room 111, Everson Hall, Davis, CA 95616
77. R. Goodman, LOF Technical Center, 1701 East Broadway, Toledo, OH 43605
78. K. Hardy, General Motors Technical Center, Engineering Building (W3-EVP), 30200 Mound Road, Warren, MI 48090-9010
79. K. L. Heitner, Electric/Hybrid Propulsion Division, Department of Energy, CE-321, 5G-046/FORSTAL, 1000 Independence Avenue, SW, Washington, DC 20585
80. C. C. Hsieh, Senior Project Engineer, General Motors System Engineering, Systems Analysis and Simulation Department, 1151 Crooks Road, Troy, MI 48084
81. R. O. Hultgren, Deputy Assistant Manager, Energy Research and Development, DOE-OR, ORNL, Building 4500N, MS 6269
82. H. M. Ingram, Director, Udall Center for Studies in Public Policy, The University of Arizona, 803/811 East First Street, Tucson, AZ 85719
83. J. Jewett, Arizona Energy Office, Suite 1200, 3800 North Central Avenue, Phoenix, AZ 85012
84. B. Kelm, Village Plaza, Suite 225, 23400 Michigan Avenue, Dearborn, MI 48124
85. N. M. Khatib, General Motors Technical Center, Engineering Building (E2-HVAC), 30200 Mound Road, Warren, MI 48090-9040
86. S. L. Kwon, Thermo King Corporation, 314 West 90th Street, Minneapolis, MN 55420
87. Z. Lavan, Professor Emeritus, Department of Mechanical Engineering, Illinois Institute of Technology, 3110 South State Street, Chicago, IL 60616
88. W. B. Luzader, Jr., Owner, Quality Car Care, Inc., 103 Midway Lane, Oak Ridge, TN 37830
89. C. D. MacCracken, President, Calmac Manufacturing Corporation, 101 West Sheffield Avenue, P. O. Box 710, Englewood, NJ 07631
90. P. G. Malone, Principal R&D Engineer, Eaton Corporation, Automotive & Appliance Controls Division, 191 East North Avenue, Carol Stream, IL 60188-2090
91. J. W. Nehls, Sr., DOE-OR
92. J. Nelson, Refrigeration Research, 525 North Fifth Street, P. O. Box 869, Brighton, MI 48116

93-102. Office of Scientific and Technical Information, P.O. Box 62, Oak Ridge, TN 37831

103. D. O'Hara, Electric/Hybrid Propulsion Division, Department of Energy, CE-321, 5G-030/FORSTAL, 1000 Independence Avenue, SW, Washington, DC 20585
104. A. Patti, Chrysler Technology Center, 800 Chrysler Drive, CIMS: 484-10-01, Auburn Hills, MI 48326-2757
105. W. G. Phelps, Director, Safeguards and Security Division, DOE-OR
106. T. Potter, National Renewable Energy Laboratory, 1617 Cole Blvd., Golden, CO 80401
107. F. O. Rosaz, R&D Engineer, Eaton Corporation, Automotive and Appliance Controls Division, 191 East North Avenue, Carol Stream, IL 60188-2090
108. M. Rubin, Lawrence Berkeley Laboratory, Building 2, Room 306, University of California, Berkeley, CA 94720

109. J. B. Shrago, Director, Office of Technology Transfer, 405 Kirkland Hall, Vanderbilt University, Nashville, TN 37240

110. A. Stocker, General Motors Harrison Division, A&E Building, 200 Upper Mountain Road, Lockport, NY 14094

111. T. G. Statt, Electric Power Research Institute, 3412 Hillview Avenue, P. O. Box 10412, Palo Alto, CA 94303

112-116. R. A. Sullivan, Program Manager, Advanced Propulsion Division, Department of Energy, CE-322, 5G-046/FORSTAL, 1000 Independence Avenue, SW, Washington, DC 20585

117. L. Topper, Energy Consultants, Inc., 2126 Connecticut Avenue, NW, Washington, DC 20008

118. R. J. Torrence, R&D Manager, Eaton Corporation, Automotive and Appliance Controls Division, 191 East North Avenue, Carol Stream, IL 60188-2090

119. S. Venkateswaran, Energetics, Incorporated, 7164 Gateway Drive, Columbia, MD 21046

120. M. Williams, Professor, Department of Economics, Northern Illinois University, DeKalb, IL 60115

121. W. M. Worek, Associate Professor, Department of Mechanical Engineering, The University of Illinois at Chicago, P. O. Box 4348, Chicago, IL 60680