MARTIN MARIETTA ENERGY SYSTEMS LIBRARIES

3 4456 0366548 8

MARTIN MARIETTA

ORNL/ER/Sub/91-KA931/4

ENVIRONMENTAL RESTORATION PROGRAM

White Oak Creek Embayment Time-Critical CERCLA Removal Action Sediment-Retention Structure

OAK RIDGE NATIONAL LABORATORY
CENTRAL RESEARCH LIBRARY
CIRCULATION SECTION
4500N ROOM 175
LIBRARY LOAN COPY
DO NOT TRANSFER TO ANOTHER PERSON
If you wish someone else to see this report, send in name with report and the library will arrange a loan.
UCN-7969 (3 9-77)

MANAGED BY
MARTIN MARIETTA ENERGY SYSTEMS, INC.
FOR THE UNITED STATES
DEPARTMENT OF ENERGY
UCN-17560 (6 7-91)

ENERGY SYSTEMS
ER

CDM Federal Programs Corporation
Oak Ridge, Tennessee

contributed to the preparation of this document and should not be considered an eligible contractor for its review.

This report has been reproduced directly from the best available copy.

Available to DOE and DOE contractors from the Office of Scientific and Technical Information, P.O. Box 62, Oak Ridge, TN 37831; prices available from 615-576-8401, FTS 626-8401.

Available to the public from the National Technical Information Service, U.S. Department of Commerce, 5285 Port Royal Rd., Springfield, VA 22161.

ORNL/ER/Sub/91-KA931/4

Energy Systems Environmental Restoration Program
ORNL Environmental Restoration Program

White Oak Creek Embayment Time-Critical CERCLA Removal Action Sediment-Retention Structure

Date Issued—September 1992

Prepared by
CDM Federal Programs Corporation
Oak Ridge, Tennessee 37831
under contract 28K-KA931C

Prepared for
U.S. Department of Energy
Office of Environmental Restoration and Waste Management
under budget and reporting codes CD 10 72 and EW 20

OAK RIDGE NATIONAL LABORATORY
Oak Ridge, Tennessee 37831-6285
managed by
MARTIN MARIETTA ENERGY SYSTEMS, INC.
for the
U.S. DEPARTMENT OF ENERGY
under contract DE-AC05-84OR21400

MARTIN MARIETTA ENERGY SYSTEMS LIBRARIES
3 4456 0366548 8

CONTENTS

FIGURES v

ACRONYMS AND ABBREVIATIONS vii

1. INTRODUCTION 1

2. SUMMARY OF EVENTS 2
   2.1 LOCATION OF THE ACTION 2
   2.2 CAUSE OF THE ACTION 2
   2.3 ORGANIZATION OF THE RESPONSE 7
   2.4 RESOURCES COMMITTED 8
   2.5 NOTICE TO NATURAL RESOURCES TRUSTEES 8
   2.6 DETAILS OF THE RESPONSE ACTION 8
   2.7 TREATMENT/DISPOSAL/ALTERNATIVE TECHNOLOGY 11
   2.8 PUBLIC INFORMATION/COMMUNITY RELATIONS ACTIVITIES 12

3. ACTION EFFECTIVENESS AND FOLLOW-UP 18
   3.1 EFFECTIVENESS OF THE ACTIONS 18
   3.2 FOLLOW-UP ACTIONS 18

REFERENCES 19

FIGURES

1 Site Location and White Oak Creek Watershed 3

2 Cesium-137 in Sediment Cores from White Oak Creek Embayment 4

3 Sediment Profile of ^{137}Cs Distribution at Mouth of WOCE 5

4 Location of Historical Core Sampling Sites in White Oak Creek Embayment 6

5 Evaluation of Alternatives 13

6 Plan View of Sediment Retention Structure 14

7 Cross-Section of Sediment Retention Structure 15

ACRONYMS AND ABBREVIATIONS

AIP	Agreement in Principle
CERCLA	Comprehensive Environmental Response, Compensation, and Liability Act
COE	U.S. Army Corps of Engineers
CRM	Clinch River Mile
CX	categorical exclusion
DOE	Department of Energy
DOE-OR	DOE Oak Ridge Field Office
DOI	U.S. Department of the Interior
EPA	Environmental Protection Agency
ER	Environmental Restoration
IAG	interagency agreement
NCP	National Contingency Plan
NEPA	National Environmental Policy Act
NRDA	Natural Resource Damage Assessment
ORNL	Oak Ridge National Laboratory
ORR	Oak Ridge Reservation
TDEC	Tennessee Department of Environment and Conservation
TVA	Tennessee Valley Authority
WOC	White Oak Creek
WOCE	White Oak Creek Embayment
WOL	White Oak Lake

1. INTRODUCTION

Over a 20-month period between September 1990 and April 1992, the Department of Energy (DOE), acting through Martin Marietta Energy Systems, Inc., managing contractor for the DOE Oak Ridge Field Office (DOE-OR), conducted a DOE-lead and DOE-funded time-critical removal action at the White Oak Creek Embayment (WOCE), pursuant to the Comprehensive Environmental Response, Compensation, and Liability Act (CERCLA) as amended by the Superfund Amendments and Reauthorization Act and provisions of the latest version of the National Contingency Plan (NCP), 40 *CFR* 300, March 8, 1990.

The time-critical removal action specifically consisted of the design and construction of a sediment-retention structure across the mouth of WOCE to prevent off-site migration of sediments contaminated by cesium (^{137}Cs) into the Clinch River. Construction of the sediment-retention structure was completed in mid-April 1992.

The purpose of this report is to meet the substantive requirements of 40 *CFR* 300.165 describing "a complete report on the removal operation and the actions taken." This section of the NCP specifically addresses on-scene coordinator reports for the Environmental Protection Agency (EPA) Superfund-lead actions and includes several elements that are not applicable to this DOE-lead action. Only those sections that are pertinent and applicable are addressed in this final report.

2. SUMMARY OF EVENTS

2.1 LOCATION OF THE ACTION

White Oak Creek (WOC) is the primary surface water drainage system for the Oak Ridge National Laboratory (ORNL) area, as shown in Fig. 1. WOC originates north of Bethel Valley Road on the southern slope of Chestnut Ridge and to the northeast of ORNL. WOC flows west through the main ORNL area and then turns southwest and joins Melton Branch before flowing into White Oak Lake (WOL). WOL is a small impoundment that has served as a settling basin for low-level radioactive effluents from ORNL since 1943. The WOL dam is the last controlled ORNL discharge point.

WOCE extends 0.6 mile downstream from the WOL dam to the confluence of WOC and the Clinch River at Clinch River Mile (CRM) 20.8. The WOCE sediments are intermittently inundated. The depth of water in the embayment is determined by the regulated summer and winter water levels of Watts Bar Reservoir and hydropower generation discharges from Melton Hill Dam, located on the Clinch River at CRM 23.1, ~2.3 river miles upstream from the mouth of WOC. The mouth of WOCE is ~120 ft wide at the summer pool water level. The area of the embayment at the summer pool level is ~8.5 acres. At winter pool, the water level is decreased by about 3 ft and the upper portion of the WOCE becomes an exposed mud flat. The sediments in the lower, deeper portion of the WOCE are inundated throughout the year.

2.2 CAUSE OF THE ACTION

The time-critical removal action at WOCE was initiated as a result of the discovery of higher-than-expected levels of ^{137}Cs in near-surface sediments near the mouth of WOC. Core samples collected from WOCE in 1978–79 showed the highest concentrations of ^{137}Cs in sediments at a depth of 63 cm below the surface (Fig. 2). In 1984, a core sample collected at a location farther downstream from that of the previous core samples showed the highest concentration of ^{137}Cs at a depth of 30 cm. In these cores, concentrations of ^{137}Cs in the surface sediments were approximately two orders of magnitude lower than the highest concentrations measured at depth. These historical data indicated that the relatively high concentrations of ^{137}Cs were located well below the sediment surface in WOCE and were unlikely to be transported downstream in the near future.

In late June 1990, a sediment core was collected by Energy Systems personnel from the lower portion of WOCE, ~50 yards upstream from the mouth of WOC, to fulfill the requirements of the *Clinch River RCRA Facility Investigation Plan* (the Phase 1 sampling plan) (Energy Systems 1990). The analytical data revealed that this core sample contained 45,000 pCi/g dry wt of ^{137}Cs near the sediment surface (Fig. 2). These results were verified by collecting and analyzing another core obtained from a location just upstream of the WOC mouth (Fig. 3). The locations of each of these four core samples are shown in Fig. 4.

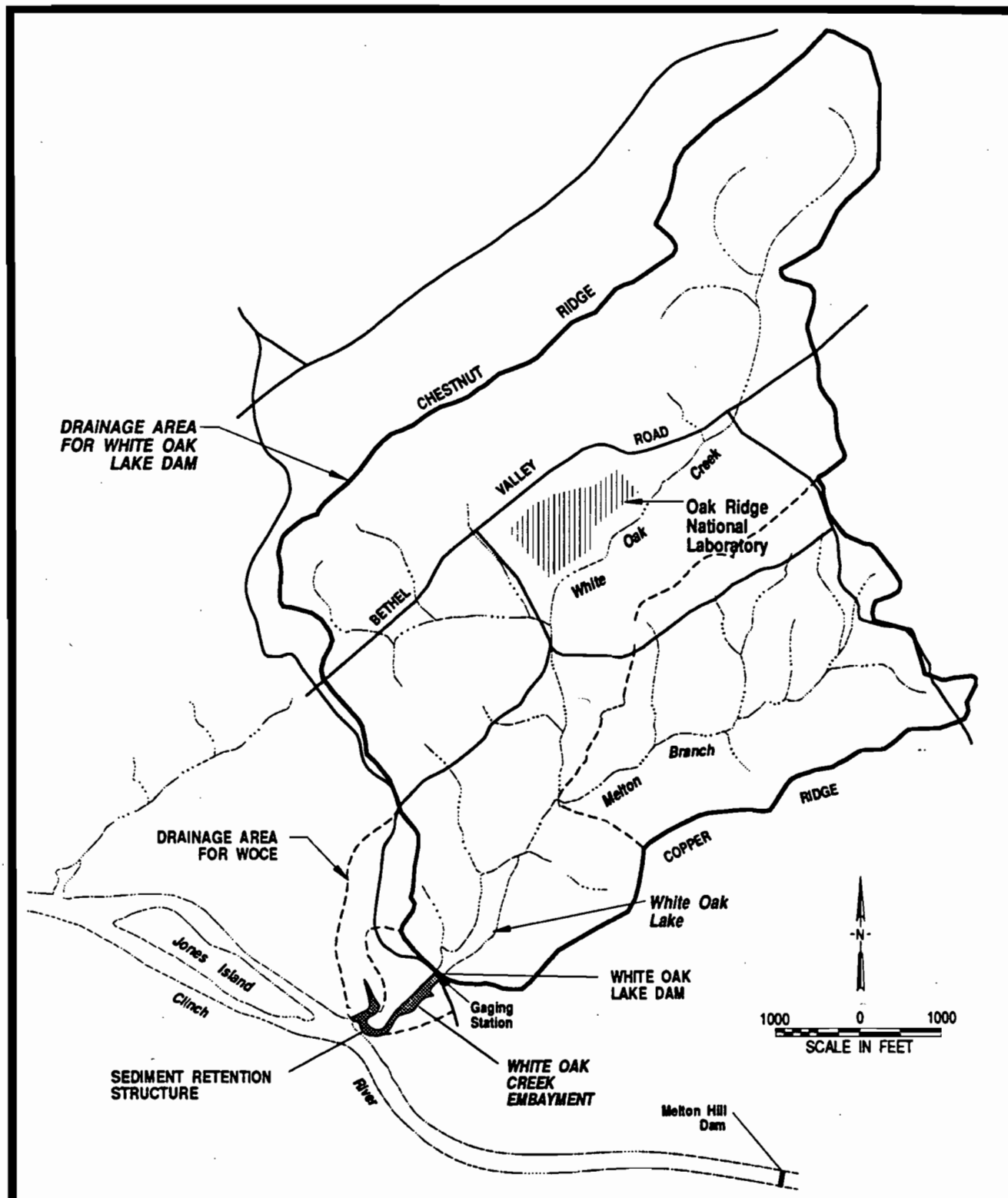

SITE LOCATION AND WHITE OAK CREEK WATERSHED

WHITE OAK CREEK EMBAYMENT

CDM FEDERAL PROGRAMS CORPORATION
a subsidiary of Camp Dresser & McKee Inc.

TIME CRITICAL REMOVAL ACTION

FIGURE No. 1

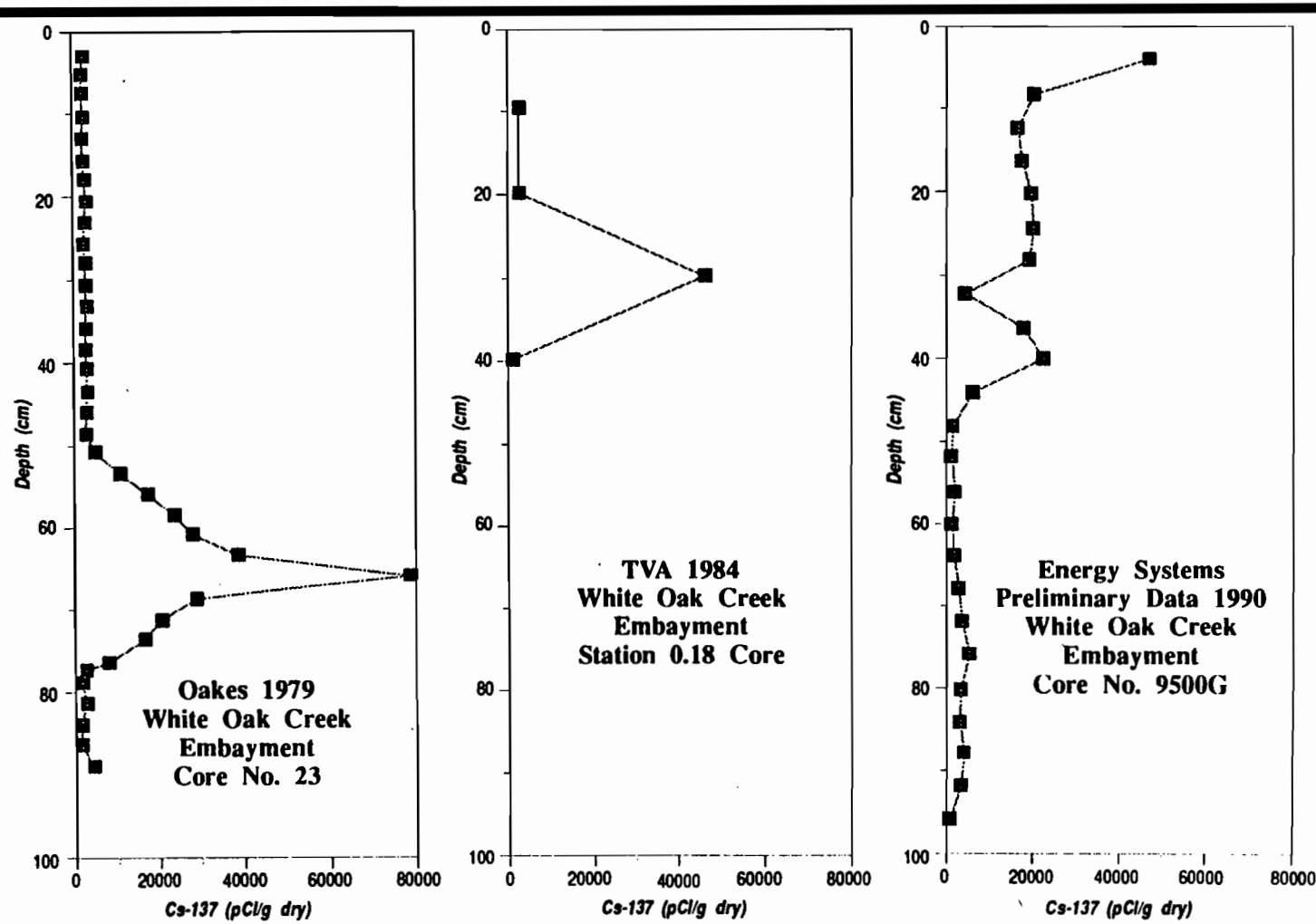

Cs-137 IN SEDIMENT CORES FROM WHITE OAK CREEK EMBAYMENT

WHITE OAK CREEK EMBAYMENT

TIME CRITICAL REMOVAL ACTION

CDM FEDERAL PROGRAMS CORPORATION
a subsidiary of Camp Dresser & McKee Inc.

FIGURE No. 2

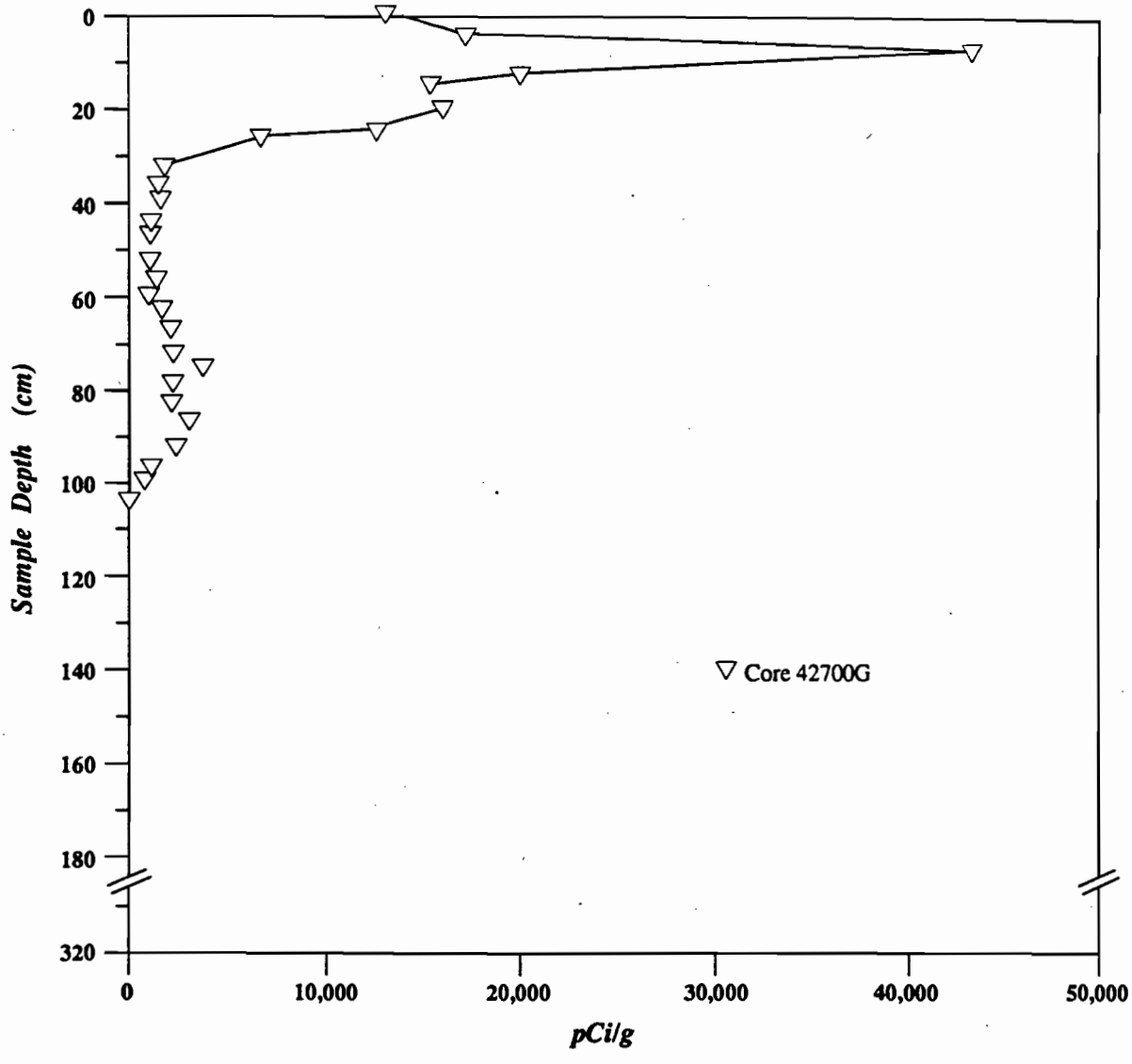

SEDIMENT PROFILE OF ^{137}Cs DISTRIBUTION AT MOUTH OF WOCE

WHITE OAK CREEK EMBAYMENT

CDM FEDERAL PROGRAMS CORPORATION
a subsidiary of Camp Dresser & McKee Inc.

TIME CRITICAL REMOVAL ACTION

FIGURE No. 3

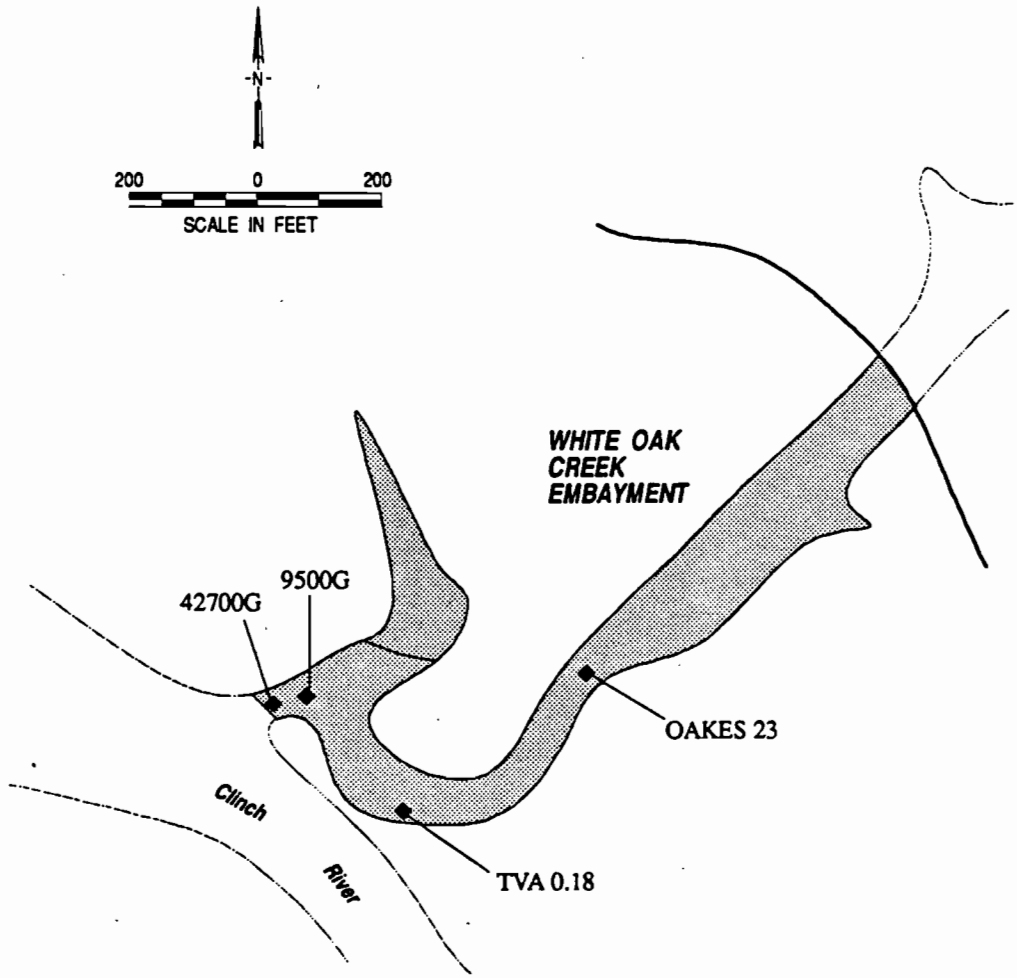

LOCATION OF HISTORICAL CORE SAMPLING SITES IN WHITE OAK CREEK EMBAYMENT

WHITE OAK CREEK EMBAYMENT

CDM FEDERAL PROGRAMS CORPORATION
a subsidiary of Camp Dresser & McKee Inc.

TIME CRITICAL REMOVAL ACTION

FIGURE No. 4

The available data indicate that at least three mechanisms of sediment erosion and transport were operating in the WOCE: (1) the normal upstream erosion and transport of particles from the upper WOCE to lower WOCE, (2) sediment focusing from shallower (upper WOCE) to deeper (lower WOCE) areas, and (3) sediment erosion and transport from lower WOCE enhanced by the movement of water in and out of the WOCE. The erosion of contaminated sediment layers in upper WOCE may have been enhanced by (1) the construction of the WOL discharge weir and (2) WOC discharges during low-water (winter pool) periods. Normal erosion and sediment transport may have been accelerated by the cyclic surging of flow that occurs twice daily in the lower WOCE as a result of operation of the Melton Hill Dam. Melton Hill Dam, a Tennessee Valley Authority (TVA) hydroelectic-power dam, is located on the Clinch River just upstream from the mouth of WOC. This dam, which began operations in 1963, is used as a peaking power unit and usually generates electricity twice each day for 1 to 2 hours. Generation of electricity at the dam results in the release of water downstream that increases the water level at the mouth of WOCE by about 2 ft and results in an upstream surge of water into the lower WOCE. When peaking power production ceases, the water level again drops and water rapidly drains from the lower WOCE into the Clinch River.

Cesium-137 analysis of sediment samples obtained in depositional areas in the Clinch River downstream of the mouth of WOC indicated that little transport of highly contaminated sediment from the WOCE had occurred thus far. However, the 1990 sediment core results raised immediate concern because the contaminated near-surface sediments in the lower WOCE were uncontrolled and potentially susceptible to erosion and downstream transport into the Clinch River and Watts Bar Reservoir.

2.3 ORGANIZATION OF THE RESPONSE

The response action was conducted solely by DOE through its subcontractors, Energy Systems and MK-Ferguson of Oak Ridge Company. Following discovery of the problem, a number of meetings were held with state and federal regulators to evaluate and discuss the appropriate course of action. Agencies participating in these meetings included EPA Region IV, the Tennessee Department of Environment and Conservation (TDEC), the U.S. Army Corps of Engineers (COE), and TVA, as well as DOE and Energy Systems. Additional details of interagency notifications and coordination are included in Sect. 2.6. An accelerated site characterization was conducted to more completely evaluate the nature and extent of the sediment contamination. A detailed report of site characterization activities in WOCE is contained in *White Oak Creek Embayment Site Characterization and Contaminant Screening Report* (Blaylock et al. 1992). Alternatives analysis and design of the sediment-retention structure were conducted by the COE, Nashville District, under an interagency agreement (IAG) with DOE.

Construction of the sediment-retention structure was managed by MK-Ferguson and conducted by their subcontractors. National and regional response teams were not involved in this project. The Tennessee Emergency Management Agency was informed of the action for local planning purposes before construction.

2.4 RESOURCES COMMITTED

All activities associated with site characterization, planning, design, and construction of the sediment-retention structure at the mouth of WOCE were funded by DOE. The latest cost of the action is an estimated $5.9 million.

2.5 NOTICE TO NATURAL RESOURCES TRUSTEES

Notification of national resources trustees concerning the release of contaminants and potential damage to natural resources at WOCE has occurred as part of the overall notification of past releases on DOE's Oak Ridge Reservation (ORR). In letters dated July 30 and November 22, 1991, respectively, DOE-OR, pursuant to Sect. 104(b)(2) of CERCLA, notified potential natural resource trustees of possible injury to natural resources under their respective jurisdictions. The potential trustees that were notified included TDEC, the Tennessee Department of Agriculture, the Tennessee Wildlife Resources Agency, the U.S. Department of the Interior (DOI), and TVA. In the notification, DOE informed all parties of past releases of hazardous substances from environmental restoration sites on the ORR.

On September 11, 1991, an information briefing on the Natural Resource Damage Assessment (NRDA) Rule was held in Nashville, Tennessee, for the ORR natural resource trustees. The agenda included an overview of the NRDA Rule, an overview of the ORR, and a summary of historical releases by DOE. As a result of the meeting, the trustees agreed to institute regular meetings to coordinate trustee activities.

On April 2, 1992, the trustees' representatives held a Natural Resources Trustees Steering Committee meeting in Oak Ridge, Tennessee, at the DOE-OR Information Resource Center. In attendance were representatives for the state of Tennessee, DOI, and DOE. A steering committee was established to pursue the negotiation of an Agreement in Principle (AIP) to help define the trustees' working relationships.

On May 28, 1992, select members of the steering committee and other trustee representatives, including legal counsel, held an NRDA Working Group Meeting in Cookeville, Tennessee, for the purpose of drafting an AIP. In that meeting a first draft of the "Oak Ridge Reservation Natural Resource Trustees Agreement in Principle" was developed. To date, no federal or state trustee damage assessment activities or efforts to replace or restore damaged natural resources have been associated with the WOCE project.

2.6 DETAILS OF THE RESPONSE ACTION

The threat abatement action taken for this project involved the design and construction of a sediment-retention structure across the mouth of WOCE to reduce and/or eliminate the off-site transport of sediments contaminated by ^{137}Cs. The following is a record of major milestones and activities from discovery of the problem through completion of construction.

- *Mid-August 1990*—Results of analyses of core samples collected near the lower WOCE indicated that higher-than-expected levels of ^{137}Cs were present at the sediment surface.

- *August 30, 1990*—Energy Systems collected additional core samples to verify the ^{137}Cs concentrations observed near the mouth of WOC.

- *September 6, 1990*—Energy Systems received confirmational data verifying that high levels of ^{137}Cs were present in surface sediments near the mouth of WOCE.

- *September 7, 1990*—Energy Systems filed an Occurrence Report concerning the presence of higher-than-expected levels of ^{137}Cs in surface sediments of WOCE. The report was transmitted to the standard ORNL Occurrence Report distribution list and included DOE-OR, DOE Headquarters, the National Response Center, TDEC, and EPA Region IV.

- *September 10, 1990*—Energy Systems Environmental Restoration (ER) Division personnel conducted an initial planning meeting concerning an appropriate course of action. The ER Division contacted COE Waterways Experiment Station personnel and scheduled a site visit to assist in initial assessment of the problem.

- *September 20, 1990*—Energy Systems met with EPA and TDEC at the TDEC office in Knoxville where discovery of the ^{137}Cs problem in WOCE was discussed.

- *September 24, 1990*—Representatives from the COE Waterways Experiment Station and the COE Nashville District Office conducted a site visit and met with ER Division personnel.

- *Late September 1990*—Energy Systems installed cables with warning signs across the mouth of WOC to prevent boat access from the Clinch River and posted new warning signs on the fence around the perimeter of the property.

- *October 1, 1990*—DOE conducted a conference call with EPA and TDEC and discussed conducting a time-critical removal action at WOCE.

- *October 17, 1990*—Representatives of EPA, DOE, COE, TVA, Energy Systems, and TDEC met at the TDEC Knoxville office to discuss the current status of the issue. Agency representatives present at this meeting concurred that the project should be conducted as a time-critical removal action and that a permit (Sect. 404, Dredge and Fill) would not be required for this project.

- *October 26–December 17, 1990*—COE performed engineering alternatives evaluation of potential corrective measures at WOCE.

- *November 9, 1990*—DOE (R. C. Sleeman) issued guidance to Energy Systems to continue to interface with COE in developing and implementing the time-critical removal action.

- *November 11–21, 1990*—Energy Systems conducted a geotechnical investigation of the strength and integrity of the lower WOCE bottom sediment for the engineering design/analysis. The sediment was found to be very soft and unconsolidated with little strength.

- *November 19, 1990*—DOE and COE executed an IAG concerning design of the proposed sediment-retention structure. This IAG was subsequently amended.

- *November 21, 1990*—DOE received a letter from EPA (J. H. Scarborough) indicating EPA's full support and agreement with DOE's decision to construct a sediment-retention structure in WOCE.

- *Late November 1990*—DOE/Energy Systems prepared and submitted a categorical exclusion (CX) determination under the National Environmental Policy Act (NEPA) for the WOCE time-critical removal consistent with exemption provisions of CERCLA Sect. 121(e)(1) and the NEPA regulations (40 *CFR* 1500–1508). The CX was approved in June 1991.

- *December 5, 1990*—Energy Systems completed a technical review of the COE alternatives analysis.

- *December 17, 1990*—Energy Systems and COE personnel presented a project status briefing at the DOE/regulator working group (EPA, TDEC, DOE, Energy Systems, and TVA) meeting in Chattanooga. COE presented the results of the alternatives analysis, and Energy Systems presented the results of the geotechnical site characterization.

- *December 17, 1990–February 15, 1991*—COE proceeded with Titles I and II engineering design of a sheet pile coffer cell structure in WOCE, followed by 50% design review on January 15, 1991, and a 90% design review on February 21–22, 1991.

- *February 22–March 27, 1991*—Energy Systems prepared plans and specifications for pile driving and general construction with bids due April 30, 1991.

- *February 22–April 30, 1991*—Energy Systems prepared, reviewed, and finalized plans and specifications for jet grouting with bids due in early June 1991.

- *March 4, 1991*—Energy Systems and MK-Ferguson began initial site preparation activities.

- *May 15, 1991*—MK-Ferguson awarded initial construction subcontract to J. M. Foster, Inc., of Alcoa, Tennessee.

- *June 14, 1991*—Energy Systems completed readiness review for the construction phase.

- *June 20, 1991*—TDEC DOE Oversight Division issued a letter to DOE approving the Water Quality Monitoring and Waste Management Plans for the project.

- *July 26, 1991*—The subcontractor completed sheet pile installation and cell closure across the mouth of WOC, thus achieving control of the contaminated WOCE sediments.

- *September 20, 1991*—MK-Ferguson awarded jet grouting and rock anchor contract.

- *November 4–8, 1991*—HALLIBURTON NUS conducted the first jet grouting demonstration at their Research and Development Center, Duncan, Oklahoma.

- *December 6–13, 1991*—HALLIBURTON NUS conducted a second jet grouting demonstration at their Research and Development Center, Duncan, Oklahoma.

- *January 29-30, 1992*—HALLIBURTON NUS conducted jet grouting bank test and demonstration at the bank of WOCE.

- *February 10-March 9, 1992*—HALLIBURTON NUS performed jet grouting field trial.

- *March 10-27, 1992*—HALLIBURTON NUS completed jet grouting of coffer cells.

- *March 30-April 5, 1992*—J. M. Foster, Inc., completed placement of concrete cap.

- *April 6-10, 1992*—HALLIBURTON NUS completed rock anchor installation.

- *April 11-14, 1992*—J. M. Foster, Inc., completed gabion installation and construction of the sediment-retention structure.

- *April 15-May 22, 1992*—J. M. Foster, Inc., and MK-Ferguson completed demobilization and site cleanup.

The response action included implementation of a water quality monitoring program that included the following activities:

1. Determination of ^{137}Cs activity as a direct indicator of contaminated sediment disturbance and transport at the construction site.

2. Monitoring of ^{137}Cs level at the Oak Ridge K-25 Site water supply intake located at CRM 14.5, which is 5.3 river miles downstream of the mouth of WOC.

3. Continuous nephelometric monitoring of turbidity and daily composite sample determination of suspended sediment concentrations as additional indicators of sediment disturbance and transport (at the confluence of WOC and the Clinch River).

4. Continuous monitoring of standard water quality parameters (pH, specific conductance, water temperature, and dissolved oxygen concentration) (at the confluence of WOC and the Clinch River).

The results of water quality monitoring before, during, and after construction are being compiled and summarized in a separate report that will be subsequently submitted for the record.

During the response action, no noteworthy incidents or problems created any potential threat to human health or the environment.

2.7 TREATMENT/DISPOSAL/ALTERNATIVE TECHNOLOGY

Before initiating design, COE conducted an evaluation in accordance with CERCLA guidance of potential alternative actions or methods of stabilizing the sediments. A summary of the alternatives evaluation is depicted in Fig. 5. Only those approaches/technologies that were implementable at this site, given the severe hydrological and geotechnical constraints, were further considered. Of all the approaches considered and evaluated, sediment retention via a coffer cell-type structure was the only technology that met the CERCLA criteria and

needs of the project. Figures 6 and 7 show a plan view and cross-section of the sediment retention structure, respectively.

Long-term effectiveness and permanence were very important aspects of the analysis because sediment control will be required to finally remediate contaminated sediments in the embayment. Furthermore, the sediment retention structure will provide for containment of both in-place contaminated sediments and contaminated sediments that may be mobilized from the watershed during remediation of other solid waste management units at ORNL over the next few decades.

2.8 PUBLIC INFORMATION/COMMUNITY RELATIONS ACTIVITIES

After discovery of the contamination problem at WOCE, DOE and Energy Systems have regularly provided notification to the public about the problem and on-going activities related to site characterization and corrective action. An administrative record file was established and is maintained at the DOE Information Resource Center in Oak Ridge, Tennessee. The administrative record file includes all of the final documents prepared by DOE/Energy Systems and their subcontractors as described in 40 *CFR* 300.810, Contents of the Administrative Record File. An index of the file is available at the Information Resource Center.

Table 1 presents a list of public notifications regarding the WOCE time-critical removal action. A copy of each of these articles/newsletters/displays is included in the administrative record file.

In addition, DOE/Energy Systems prepared and presented several public displays, including the following:

- *October 1991*—Site-Specific Five-Year Plan public meeting (Oak Ridge); numerous other meetings.
- *August 1992*—Spectrum '92, Boise, Idaho: DOE-OR traveling display, "There's no place like home . . . ."
- *September 1992*—Oak Ridge National Laboratory Graphite Reactor Visitor's Center display (50th anniversary display).

ALTERNATIVES		CERCLA CRITERIA						
		IMPLEMENTABILITY	LONG-TERM EFFECTIVENESS AND PERMANENCE	OVERALL PROTECTION OF HUMAN HEALTH AND THE ENVIRONMENT	REDUCTION OF TOXICITY, MOBILITY, AND VOLUME THROUGH TREATMENT	SHORT-TERM EFFECTIVENESS	COMPLIANCE WITH ARAR's	COST
RETENTION APPROACHES	Gabion Structure	○						
	Rockfill Structure	○						
	Rockfill/ Sheet Pile Structure	○						
	Coffer Cell/ Rockfill Structure	●	●	●	●	●	●	●
	Sheet Pile Wall Structure	○						
	Concrete Structure	○						
	Sunken Caisson Structure	○						
	Silt Curtain	○						
IN-SITU APPROACHES	Gabion Overlay	○						
	Mat Overlay	●	○					
	Fabriform Overlay	●	○					
	Excavate New Channel - Cover Old	●	○					
	Install Pipe Culvert - Cover Old	●	○					
	Dredging/ Removal Within Critical Reach	○						
	Vitrification	●	○					
	No Action	●	○	○	○	○	N/A	●

● Yes ○ No

EVALUATION OF ALTERNATIVES

WHITE OAK CREEK EMBAYMENT

CDM FEDERAL PROGRAMS CORPORATION
a subsidiary of Camp Dresser & McKee Inc.

TIME CRITICAL REMOVAL ACTION

FIGURE No. 5

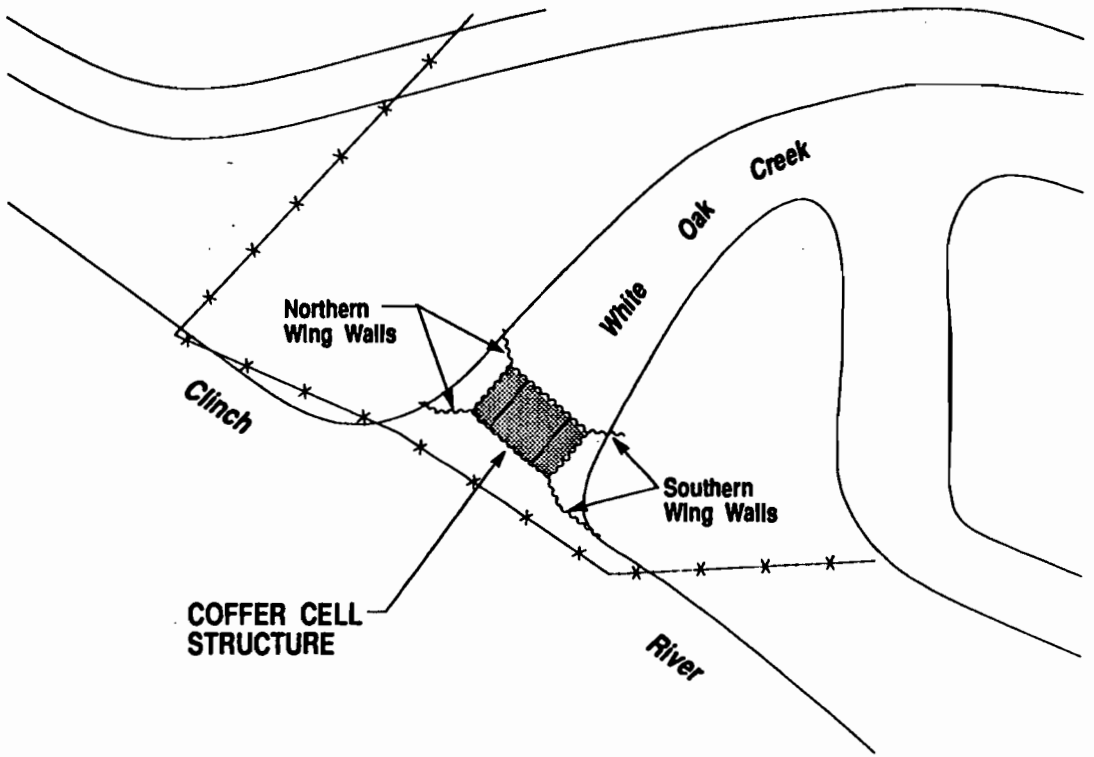

PLAN VIEW OF SEDIMENT RETENTION STRUCTURE

WHITE OAK CREEK EMBAYMENT

TIME CRITICAL REMOVAL ACTION

CDM FEDERAL PROGRAMS CORPORATION
a subsidiary of Camp Dresser & McKee Inc.

FIGURE No. 6

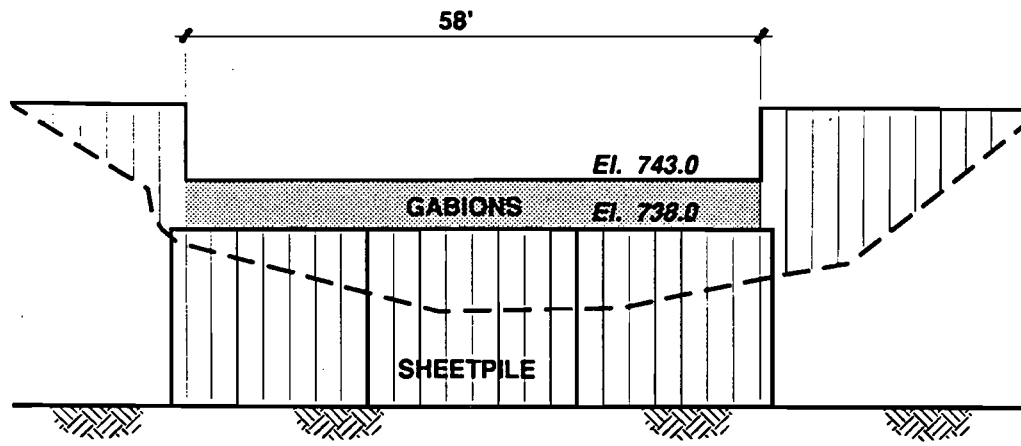

ELEVATION

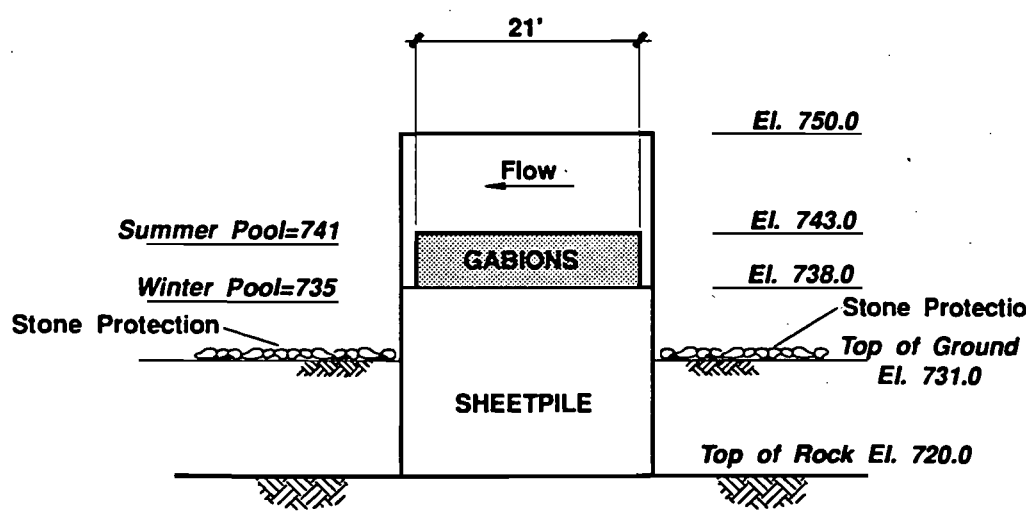

SECTION

CROSS-SECTION OF SEDIMENT RETENTION STRUCTURE

WHITE OAK CREEK EMBAYMENT

CDM FEDERAL PROGRAMS CORPORATION
a subsidiary of Camp Dresser & McKee Inc.

TIME CRITICAL REMOVAL ACTION

FIGURE No. 7

Table 1. Public notices/community relations activities

Source and title	Date
The Knoxville Journal, "Radioactive isotope discovered at site of embayment"	September 25, 1990 (p. 5A)
The Knoxville News-Sentinel, "Retention dam planned at site of radioactivity"	September 25, 1990 (p. 1)
The Oak Ridger, "Cesium-137 discovered in creek embayment no threat—Culver"	September 25, 1990 (p. 1)
The Knoxville News-Sentinel, "Environmentalists doubt DOE cleanup procedures"	September 28, 1990 (p. A3)
The Knoxville News-Sentinel, "DOE may fund TVA studies of Watts Bar"	November 1, 1990
The Knoxville News-Sentinel, "Progress reported in project to stem migration of 'hot spot' near Clinch River"	November 7, 1990 (p. A14)
The Knoxville Journal, "DOE starts work on White Oak cleanup"	November 15, 1990 (p. 6A)
Energy Systems News, "Interim measures under way at embayment"	November 29, 1990
The Oak Ridger, "Corps builds new dam on creek to keep pollutants out of Clinch River"	January 16, 1991
Environmental Update, DOE, "Samples Collected from White Oak Creek Embayment"	February 1991
The Oak Ridger, "More radioactive contaminants leaking into river, because of heavy rainfall during the past week"	February 24, 1991 (p. 1A)
Environmental Update, DOE, "Dam Under Construction to Control Contaminated Sediments"	June 1991
The Oak Ridger, "White Oak Dam should halt drift of radioactive sediment"	June 27, 1991 (p. 1)
Fact Sheet, DOE, "Pollution Control Measures in the White Oak Creek Embayment"	July 1991
The Knoxville Journal, "$4M OR dam targets radioactive sediment"	July 3, 1991 (p. 5A)
The Courier News, "Contaminated sediment program underway"	July 7–8, 1991 (p. A4)
The Roane County News, "Notice of Availability for Public Review"	August 26, 1991
The Oak Ridger, "New embayment holding back contaminants"	September 10, 1991 (p. 1)
Fact Sheet, DOE, "Pollution Control Measures in the White Oak Creek Embayment"	Fall 1991
The Oak Ridger, "Huge tool will be used for environmental restoration"	October 15, 1991 (p. 1)

Table 1 (continued)

Source and title	Date
The Knoxville News-Sentinel, "A look at waste leaks, waste politics and waste reductions"	January 22, 1992
The Knoxville News-Sentinel, "What's not up? Dock"	April 10, 1992
Environmental Update, DOE, "White Oak Creek Construction Begins"	Spring 1992
Fact Sheet, "Pollution Control Measures in the White Oak Creek Embayment"	July 1992

3. ACTION EFFECTIVENESS AND FOLLOW-UP

3.1 EFFECTIVENESS OF THE ACTIONS

The results of the water quality monitoring program conducted throughout the construction period through July 1992 indicate that off-site transport of contaminated sediments has been virtually eliminated under dry weather conditions. The physical process used during construction of the retention structure created minimal sediment disturbance and did not exacerbate the problem. During periods of heavy rainfall, turbidity (a measure of suspended solids) increases due to storm water runoff from the watershed, as well as sediment suspension throughout the WOC system. Sediment suspension in lower WOCE would be expected to account for a small fraction of the sediment load during periods of heavy rainfall.

3.2 FOLLOW-UP ACTIONS

As part of the original agreement with the state of Tennessee, DOE/Energy Systems has included the sediment-retention structure in its regular site inspection program. In addition, a water quality monitoring station will be established at the sediment-retention structure, as part of the ORNL Environmental Restoration Program, to monitor the long-term effectiveness of the action.

REFERENCES

Blaylock, B. G., M. L. Frank, L. A. Hook, F. O. Hoffman, and C. J. Ford. 1992. *White Oak Creek Embayment Site Characterization and Contaminant Screening Report*, ORNL/ER-81, Oak Ridge National Laboratory, Martin Marietta Energy Systems, Inc.

Energy Systems (Martin Marietta Energy Systems, Inc.). *Clinch River RCRA Facility Investigation Plan*, ES/ER-1/D1, Environmental Restoration Division; see also ES/ER-1&D2, *Clinch River RCRA Facility Investigation Plan: Responses to Regulator Comments*, issued April 1991.

DISTRIBUTION

1. L. D. Bates
2. D. T. Bell
3. K. W. Cook
4. M. F. P. DeLozier
5. N. W. Durfee
6. J. T. Etheridge
7. S. B. Garland
8. C. W. Gehrs
9. C. D. Goins
10. P. J. Halsey
11. K. G. Kahl
12. B. L. Kimmel
13. T. M. Koepp
14. F. C. Kornegay
15. E. H. Krieg
16. J. R. Lawson
17. V. D. Legg
18. D. M. Matteo
19. J. R. Merriman
20–21. P. T. Owen
22. F. S. Patton
23. M. W. Rosenthal
24. T. H. Row
25. G. E. Rymer
26. S. D. Van Hoesen
27. R. I. Van Hook
28. D. Watkins
29. R. K. White
30. R. Williams
31. R. O. Hultgren
32. Central Research Library
33. Environmental Sciences Division Library
34–38. ER Document Management Center—RC
39. ORNL Laboratory Records

40. Office of Assistant Manager for Energy Research and Development, Department of Energy Oak Ridge Field Office, P.O. Box 2001, Oak Ridge, Tennessee 37831-8600
41–43. J. Bilyeu, Department of Energy, Office of Environmental Restoration, Eastern Area D&D Branch, EM-423 (GTN), Washington, DC 20545
44–46. M. Ferre, Department of Energy Oak Ridge Field Office, P.O. Box 2001, Oak Ridge, TN 37831-8541
47. Mary Leslie, CDM Federal Programs, 800 Oak Ridge Turnpike, Oak Ridge, TN 37830
48–49. Richard Nace, Branch Chief, Nonenrichment Facilities, Oak Ridge Program Division, Office of Eastern Area Programs, Office of Environmental Restoration, EM-423, Trevion 2, U.S. Department of Energy, Washington, DC 20585
50–52. D. G. Page, Department of Energy Oak Ridge Field Office, P.O. Box 2001, Oak Ridge, TN 37831-8541
53–55. R. C. Sleeman, Department of Energy Oak Ridge Field Office, P.O. Box 2001, Oak Ridge, TN 37831-8541
56–67. J. T. Sweeney, Department of Energy Oak Ridge Field Office, P.O. Box 2001, Oak Ridge, TN 37831-8541
68. D. W. Swindle, Radian Corporation, 120 South Jefferson Circle, Oak Ridge, TN 37830
69–70. H. M. Thron, Chief, Enrichment Facilities, Oak Ridge Program Division, Office of Eastern Area Programs, Office of Environmental Restoration, EM-423, Trevion 2, U.S. Department of Energy, Washington, DC 20585
71–72. Office of Scientific and Technical Information, P.O. Box 62, Oak Ridge, TN 37831