CENTRALIZED EXTERNAL DOSIMETRY SYSTEM (CEDS) NUCLEAR ACCIDENT DOSIMETER

MAY 15, 1992

X-MA-92-3

prepared by the
Oak Ridge National Laboratory
managed by
Martin Marietta Energy System, Inc.
for the
U.S. DEPARTMENT OF ENERGY
under Contract No. DE-AC05-840R21400

[redacted]

CEDS NAD Report

Copy No.: 1

Assigned To:
AHMED,ABU B
BLDG: 2652A MS: 6290

NOTICE TO RECIPIENT

This manual is the property of Martin Marietta Energy Systems, Inc. and you are charged with responsibility for this CONTROLLED COPY of the manual. New pages will be issued from time to time and you are responsible for:

(1) the prompt insertion of new pages,
(2) the destruction of superseded pages, and
(3) return of transmittal receipt.

This manual cannot be reassigned by the assignee. Upon job change or termination of employment with Martin Marietta Energy Systems, Inc., please return this manual to:

Documentation and Status Reporting Group
Oak Ridge National Laboratory
P.O. Box 2008, Building 2024, MS-6045
Oak Ridge, TN 37831

[redacted]

This assignment page to remain with the manual.

CENTRALIZED EXTERNAL DOSIMETRY SYSTEM (CEDS) NUCLEAR ACCIDENT DOSIMETER

Prepared by:

G. T. Mei
W. H. Casson, Sr.

Approved by:

S. W. Croslin

X-MA-92-3

May 15, 1992

Oak Ridge National Laboratory
Oak Ridge, Tennessee 37831

05/26/92

CEDS NAD Report

Distribution List

Copy	Recipient	MS	Bldg
1	ABU B AHMED	6290	2652A
2	R S BOGARD	8105	9711-1
3	M A BUCKNER	6379	7710
4	W H CASSON, SR	6379	7710
5	STEVE W CROSLIN	6494	
6	E DIXON	6105	4500S
7	T C DODD	PGDP	C743
8	DSR OFFICE COPY	6045	2024
9	DSR RECORD COPY	6045	2024
10	R W FIELDS JR	7401	K-1020
11	R J FORBES	6045	2024
12	J B HUNT	8105	9711-1
13	C E MAPLES	7401	K-1020
14	KIMBERLY L MCMAHAN	6290	2652A
15	GLORIA T MEI	6045	2024
16	S E MEINERS	PGDP	C743
17	G L MURPHY	6498	
18	R W OLIVER	7404	K1020
19	B F RUTHERFORD	8105	9711-1
20	C S SIMS	6106	4500S
21	ED SONDER	6290	2652A
22	M L SOULEYRETTE	8105	9711-1

TABLE OF CONTENTS

LIST OF FIGURES. ii

1. INTRODUCTION 1-1

2. DOSIMETER SELECTION 2-1

3. TEST AND EVALUATION OF CEDS DOSIMETERS 3-1
   - 3.1 DOSIMETER COMPONENTS 3-2
     - 3.1.1 Personnel Nuclear Accident Dosimeter 3-2
     - 3.1.2 Fixed Nuclear Accident Dosimeter 3-5
   - 3.2 DOSIMETER TEST 3-6
     - 3.2.1 Response of Dosimeter to Gamma Radiation 3-7
     - 3.2.2 Response of Dosimeter to Neutron Radiation 3-7
     - 3.2.3 Test Conducted at Army Pulse Reactor Facility 3-13

4. SUMMARY AND CONCLUSIONS 4-1
   - 4.1 SUMMARY 4-1
   - 4.2 CONCLUSIONS 4-2

5. ACKNOWLEDGEMENTS 5-1

6. REFERENCES 6-1

7. APPENDICES 7-1

List of Figures

Fig. No.		Page No.
Fig. 1	Diagram of Harshaw beta/gamma dosimeter showing location of TLD chips	3-3
Fig. 2	Diagram of neutron dosimeters showing chip positions	3-4
Fig. 3	Response of beta/gamma dosimeter to high-level gamma radiation	3-8
Fig. 4	Response of neutron dosimeter to high-level neutron radiation	3-9
Fig. 5	Response of neutron dosimeter to high-level gamma radiation showing possible correction for supralinearity	3-10

1. INTRODUCTION

DOE Order 5480.11 requires personnel nuclear accident dosimeters (PNADs) to be capable of processing and evaluating doses due to a nuclear accident. They must be capable of evaluating gamma doses from 10 to 1000 rad* with an accuracy within 20% and neutron doses from 1 rad to 1000 rad* with an accuracy of 30%. The dose assessment system must be independent of fixed dosimeters or monitor data. DOE Order 5480.11 also requires fixed nuclear accident dosimeters (FNADs) to be capable of determining neutron dose from 10 rad to 10,000 rad with an accuracy within 25%. The fixed unit shall be capable of measuring fission gamma radiation from 10 rad to 10,000 rad in the presence of neutrons with an accuracy within 20%.[1]

Martin Marietta Energy Systems (Energy Systems) in 1989 implemented a new dosimetry program, Centralized External Dosimetry System (CEDS), for personnel monitoring based on TLD-600 and TLD-700 dosimeter chips. In this study, the use of the CEDS dosimeter as a nuclear accident dosimeter was evaluated and found to be acceptable. Algorithms which were developed to supplement the current CEDS algorithms and corrections are applied to evaluate the absorbed dose for a variety of nuclear accident spectra to which direct spectra measurements are not practical.

* In keeping with the requirements of 10 CFR 20 and DOE Order 5480.11, the units in this report will be the traditional units of rad and rem. (100 rad = 1 gray, 100 rem = 1 sievert.)

2. DOSIMETER SELECTION

Selection of an accident dosimeter system depends upon the analysis of the needs, cost versus benefit, and practical application.

Many types of dosimeters currently available can be used as Nuclear Accident Dosimeters (NADs). These include activation foils, threshold-detector units, fission foils, track-etch, TLDs, TLD-albedo, film, solid state detectors, and chemical systems. Of these systems, the chemical units were not considered because of their low sensitivity and the difficulty of handling and processing. Also, solid-state units were not considered because of a general lack of positive information and experience and the need for more basic research than the current study assayed. Fission foils were considered, but eliminated because of the large amount of fissionable material required. Of the remaining systems, an evaluation was made based upon data obtained during 22 Nuclear Accident Dosimetry Studies conducted by the Dosimetry Applications Research Group at ORNL, primarily using the Health Physics Research Reactor[2]. These systems are grouped into three categories: 1) threshold detectors and activation foils which involve detecting radiation emitted from an isotope with a known decay rate, 2) foils which are developed and read by optical means or use of a similar effect, and 3) the TLD systems which involve heating the detectors and measuring the photon emission.

Activation foils and threshold detectors have, in the past, been the most popular systems and were used exclusively for accident dosimetry. Such systems do not, in general, have a sensitivity to gamma radiation and, therefore, require a separate gamma dosimeter. The most important advantage of the activation-foil system is the ability to combine different foils in such a manner that information about the neutron-energy spectrum is obtained and used in the evaluation of the neutron dose. The use of threshold units is limited since most of the units are based upon fission foils. A system of combined threshold detector foils and activation foils can be utilized as an effective accident

dosimeter. Because of the modest sensitivity of activation methods, the accuracy and precision of the results deteriorate at lower dose levels.

Special foils have been developed for use in neutron dosimetry to provide higher sensitivity and good spectral response. NTA film has been around a long time and has proven to be an adequate accident dosimeter. The readout method involves reading the track densities and is subject to significant error. Film is also sensitive to environmental effects such as exposure to elevated temperatures. Such a system may not be adequate if there is a possibility of having to process a large number of units. Track-etch detectors are being introduced rapidly, and automated systems may soon increase processing speed to make them competitive with other accident dosimeters. Although these units would provide the ideal supplement to other units with lower energy thresholds such as TLD units, the excessively long processing time currently required limits their application to accident dosimetry.

TLD units, in general, depend upon the secondary particle emission from reactions such as $^{6}Li(n,\alpha)^{3}H$, for neutron detection. As such, the detector response is strongly skewed toward the thermal energy range. Overresponse to thermal neutrons can be reduced by covering the TLDs with cadmium, but the response is still strongest at the lower energies and weakest at the higher energies which contributes most to the total dose. The TLD-albedo, which is a modification of the TLD unit to measure neutrons reflected from the body, increases the sensitivity to high-energy neutrons. These albedo units are in wide-spread use as personnel dosimeters and have been successfully applied to accident dosimetry.

In general, the TLD units and the single foil units give only one measurement of the incident neutrons. No spectral information can be deduced directly from the readings. Therefore, a preprocessing knowledge of the approximate neutron spectrum is required. This is also useful in processing activation foils to reduce errors that may result in spectral unfolding and to provide more-

reliable data at lower dose exposures. Typical activation sets include gold foils to measure thermal and low-energy neutrons and sulfur to measure high-energy neutrons (> 2.8 MeV). Additional foils may be used to fill in between these measurements, but in general are only marginally successful. However, a considerable increase in accuracy can be accomplished if an estimate of the spectrum is available. In addition, other measurements or information may be used to increase accuracy such as bioassay or neutron-to-gamma ratios.

Specifically, the accident dosimetry system employed by CEDS dosimeters must respond to a wide variety of neutron spectra and gamma energies. Both TLD-albedo and activation foils meet these requirements, with the TLD response being more dependent upon estimates of the neutron spectrum, while the activation foils need an extra gamma detector. Both systems provide adequate response, with the activation foils losing both accuracy and precision at lower neutron dose rates. Both systems meet the needs in terms of being well established and in being available in a usable form such as small package size and ease of handling. Both endure reasonable variations in temperature, humidity, and pressure and are rugged enough to withstand normal handling abuse. Although both systems require an extensive readout system with elaborate calibration and quality control, the TLD system benefits from having a usable system already installed and used in Energy Systems. The cost of installing an activation-foil set would include acquisition of appropriate counting equipment and calibration sources, foil sets for each person with a nontrivial risk, computer-interface equipment, and the necessary software. Development of the entire system, including training and record establishment was estimated to require in excess of one year and a cost that could exceed one million dollars. Proper maintenance of the system would require an estimated one man-year effort each year at a minimum. In contrast, the TLD unit is already established and requires only a

minimum amount of modification and training. This can be accomplished from the present status with less than one man-month each year thereafter to review the system and to update the required training.

The selection of the present TLD system for the applications in accident dosimetry is based as much on cost versus benefit as on utility or cost alone. It must be recognized that an accident-dosimeter system has limited importance in both the treatment of overexposed personnel and in legal mitigation stemming from a criticality accident. Analysis of blood-sodium activation, hair-sulfur transmutation, and other biological indicators, such as chromosome-aberration measurements, can be more reliable indicators of absorbed dose and more useful in these applications. Therefore, the cost of implementing a new system should not be excessive since the expected return is both small and improbable.

In addition to the nuclear accident dosimeter system, biological dosimetric systems will be used whenever possible as part of the assessment of accident doses.

3. TEST AND EVALUATION OF CEDS DOSIMETERS

The CEDS dosimeters in use at each of the Energy Systems' plants in Oak Ridge and Paducah have been accredited under the Department of Energy Laboratory Accreditation Program for personnel dosimetry (DOELAP). To use the system currently applied solely to personnel monitoring as an accident dosimetry system, several minor steps were taken. First the dosimeters were tested for neutron and gamma radiations across the range required to ensure that the response was adequate and that the errors expected in these measurements were within the required limits. Second, the response to different neutron spectra expected in a nuclear accident were calculated and the results made available to the system operators. Next, dosimeters were tested in a neutron/gamma field which was representative of an accident-related exposure. These tests were conducted at the Army Pulse Reactor Facility (APRF). After the testing and evaluation, the decision was made for implementation and the appropriate CEDS Standard Operating procedures were developed for processing. Training was provided for the CEDS processing personnel to ensure that they understood the system function. Training was also provided to Radiation Protection personnel to acquaint them with the necessary information regarding the Nuclear Accident Dosimetry program.

3.1 DOSIMETER COMPONENTS

3.1.1 Personnel Nuclear Accident Dosimeter (PNAD)

The routinely issued CEDS dosimeter will be processed as a PNAD following a nuclear accident. Only the beta/gamma unit is necessary to evaluate an accident-level dose. However, additional useful information may be derived from any neutron or other dosimeter the person may be assigned.

The CEDS dosimeters are based on TLD-600 and TLD-700 chips.[3] The TLD-600 is neutron-sensitive with a response mostly in the low energy and thermal region of the neutron spectrum. The TLD-700 is relatively insensitive to neutrons of any energy.

Two types of CEDS dosimeters, the beta/gamma dosimeter and the neutron dosimeter, are currently in use. Filtration for the beta/gamma dosimeter includes one 1-g/cm^2-tissue-equivalent filter, one copper filter, and one thin mylar window for beta transmission each over TLD-700 positions and one 300 mg/cm^2 filter over the TLD-600 position (Figure 1). Application of a complex algorithm allows separation of radiation doses from beta, gamma, and neutrons and allows some photon discrimination for low-energy photons and x-rays. The neutron dosimeter has one TLD-600 and one TLD-700 mounted under 300 mg/cm^2 plastic and one TLD-600 and one TLD-700 mounted under a cadmium filter (Figure 2). This allows discrimination against incident thermal neutrons, to which the TLD-600 characteristically overresponds. Accurate dose measurements with the neutron dosimeter, however, can only be accomplished with knowledge of the neutron spectra or in neutron fields to which the dosimeter has been calibrated. Detailed descriptions of the dosimeter units are available.[3,4]

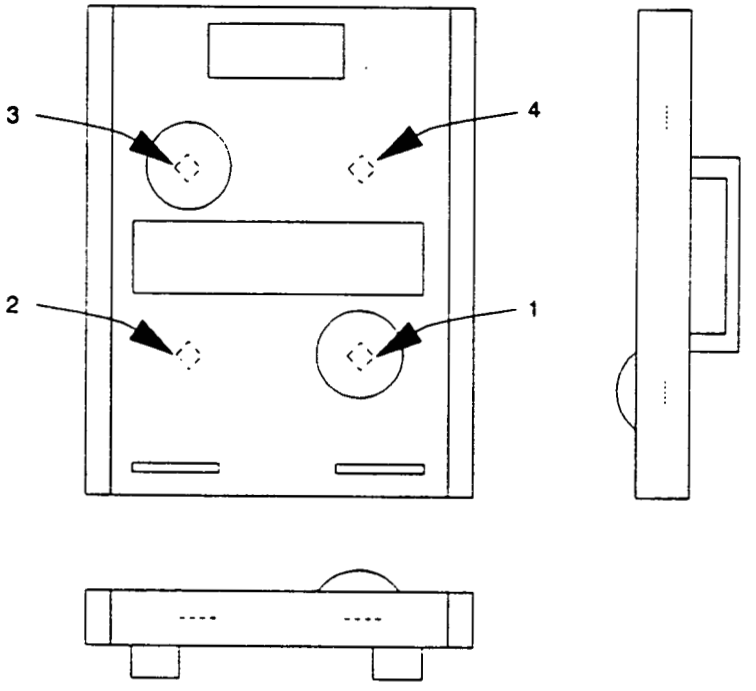

1 - TLD-700 .381 mm thick with 1 g/cm^2 tissue equivalent plastic
2 - TLD-700 .381 mm thick with 242 mg/cm^2 plastic and .1 mm Cu filter
3 - TLD-700 .09 mm thick with mylar covered open window (7.5 mg/cm^2)
4 - TLD-600 .381 mm thick with 300 mg/cm^2 tissue equivalent plastic

Fig. 1. Diagram of Harshaw beta/gamma dosimeter showing location of TLD chips.

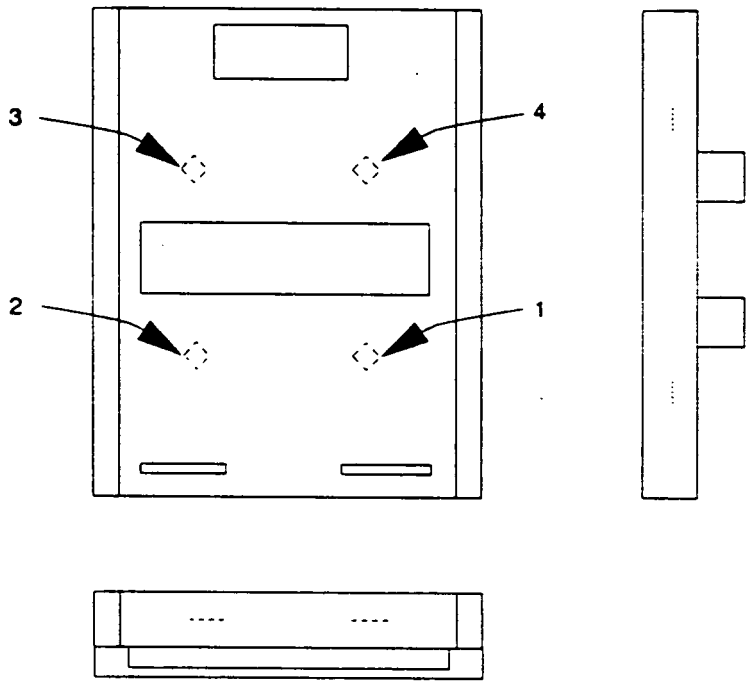

1 - TLD-600 .381 mm thick with 70 mg/cm^2 tissue plastic and .46 mm Cd
2 - TLD-700 .381 mm thick with 70 mg/cm^2 plastic and .46 mm Cd
3 - TLD-700 .381 mm thick with 300 mg/cm^2 plastic
4 - TLD-600 .381 mm thick with 300 mg/cm^2 plastic

Fig. 2. Diagram of neutron dosimeter showing chip positions.

The readout and calibration of both dosimeters is also a complex process. Corrections are made for both the individual response of the TLD chip and the response of the TLD reader as well as application of a dose calibration correction factor.[3,4]

In the case of personnel monitoring for neutron exposures, the reported dose equivalent is also corrected for the spectral response based on measurements with the dosimeter system in the field of exposure. The current neutron algorithm calls for subtraction of the gamma dose and correction of the dosimeter output for chip response and reader response as applied to each TLD-600/TLD-700 pair. If the results for the two pairs differ by more than 20%, the output is flagged for further analysis.

For nuclear accident dosimetry application, the use of an optical filter or adjustment of high voltage on the TLD reader is necessary to limit the output of the reader from very high-dose readings. Results from beta/gamma dosimeter readout are used for the interpretation of both gamma and neutron doses. However, if a neutron dosimeter is worn by personnel, then the neutron dosimeter readout from the cadmium-covered elements is used for the interpretation of the neutron dose. The neutron readings are corrected by applying the calculated spectral correction factor in addition to the dose calibration correction (See Section 3.2.2). Details related to the processing of PNADs are contained in CEDS Procedure 3-1-500, "Personnel Nuclear Accident Dosimetry".

3.1.2 Fixed Nuclear Accident Dosimeter (FNAD)

The FNAD is a combination of the CEDS beta/gamma and neutron dosimeters placed on a Lucite phantom. In order to increase the albedo effect, the loops on the back of the dosimeter holders are removed to get dosimeters closer to the phantom.

Readouts of the beta/gamma dosimeter are used to interpret the gamma dose and readouts from the cadmium-covered elements of the neutron dosimeter are used to interpret the neutron dose. The

same spectral correction factors and dose calibrations as for the PNAD system are used for the FNAD system. Details concerning the processing of FNADs are contained in CEDS Procedure 3-1-505,"Fixed Nuclear Accident Dosimetry".

Because of the weight, physical size, and cost of a standard 40 × 40 × 15-cm phantom, use of other phantom configurations was explored. A phantom of 20 x 20 x 10-cm was chosen for use in the FNAD implementation. A 20 x 15 x 10-cm can be used as an alternative with minimal loss in response if it is deemed necessary due to cost or for convenience. Appendix A summarizes the study of the effects of the phantom size on the response of FNADs.

3.2 DOSIMETER TEST

The Harshaw TLD dosimeter system consists of a beta/gamma dosimeter issued to all personnel who are required by plant procedures to wear a dosimeter and a neutron dosimeter issued to radiation workers who may be exposed to neutrons. Initial preparation involved testing and calibrating 100 dosimeter cards of each type. Calibration included both Cs-137 calibration and D_2O-moderated Cf-252 calibration in holders and on the phantom. The source configurations used in the calibrations are traceable to NBS (National Bureau of Standards now the National Institute of Standards and Technology). Conversions to rads were made using information from ICRP 21[5]. The Cs calibration was carried out using a standard 40×40×15-cm phantom at 1 m from the source. The total exposure was 250 mR. The neutron calibration was also done on a standard phantom. The source-to-phantom distance was 50 cm. A multiplicative calibration factor was then calculated for each dosimeter by dividing the calibration value by the dosimeter response. Results of these measurements are given in Appendices B through E.

3.2.1 Response of Dosimeter to Gamma Radiation

Accident-level gamma doses for both beta/gamma and neutron dosimeters were simulated using the same gamma source that was used for calibration. The source-to-phantom distances were from 1 m to 0.3 m, depending on the required exposure time.

The absorbed-dose levels that were tested were near 0.5, 1, 5, 10, 50, 100, 500, and 1000 rads (Appendices G and H). Results are shown graphically in Figures 3 and 4.

Evaluation of the gamma dosimeter readings were accomplished using the formula:

$$D_\gamma = A \times CF_\gamma ,$$

where D is the absorbed dose in rad, A is the output for the dosimeter reader for chip 1 of the beta/gamma dosimeter in nanocoulomb (nC), and CF is the calibration factor in rads/nC.

3.2.2 Response of Dosimeter to Neutron Radiation

Accident-level doses were simulated by using a bare Cf-252 source. The phantom was mounted at 10 cm from the source position, and the dosimeters, one at a time, were mounted on the front center of the phantom. The absorbed doses delivered were near 0.5, 1, 5, 10, 50, 100, 500, and 1000 rads (Appendix F). Results are shown graphically in Figure 4. Measurements comparing the responses of the dosimeter to 1.0 rad at 0.5 m and at 0.1 m indicate a considerable deviation in the expected $1/r^2$ prediction. A correction factor (AF) was derived from this measurement and applied to all exposures conducted at 0.1 m.

There are three factors that are critical to the measurement of the neutron absorbed dose. The neutron energy spectra, the fluence to absorbed dose conversion factors, and the dosimeter response curve. The neutron energy spectra may be obtained from previous measurements or calculations. The neutron fluence to absorbed dose in any particular energy range can be calculated and is readily

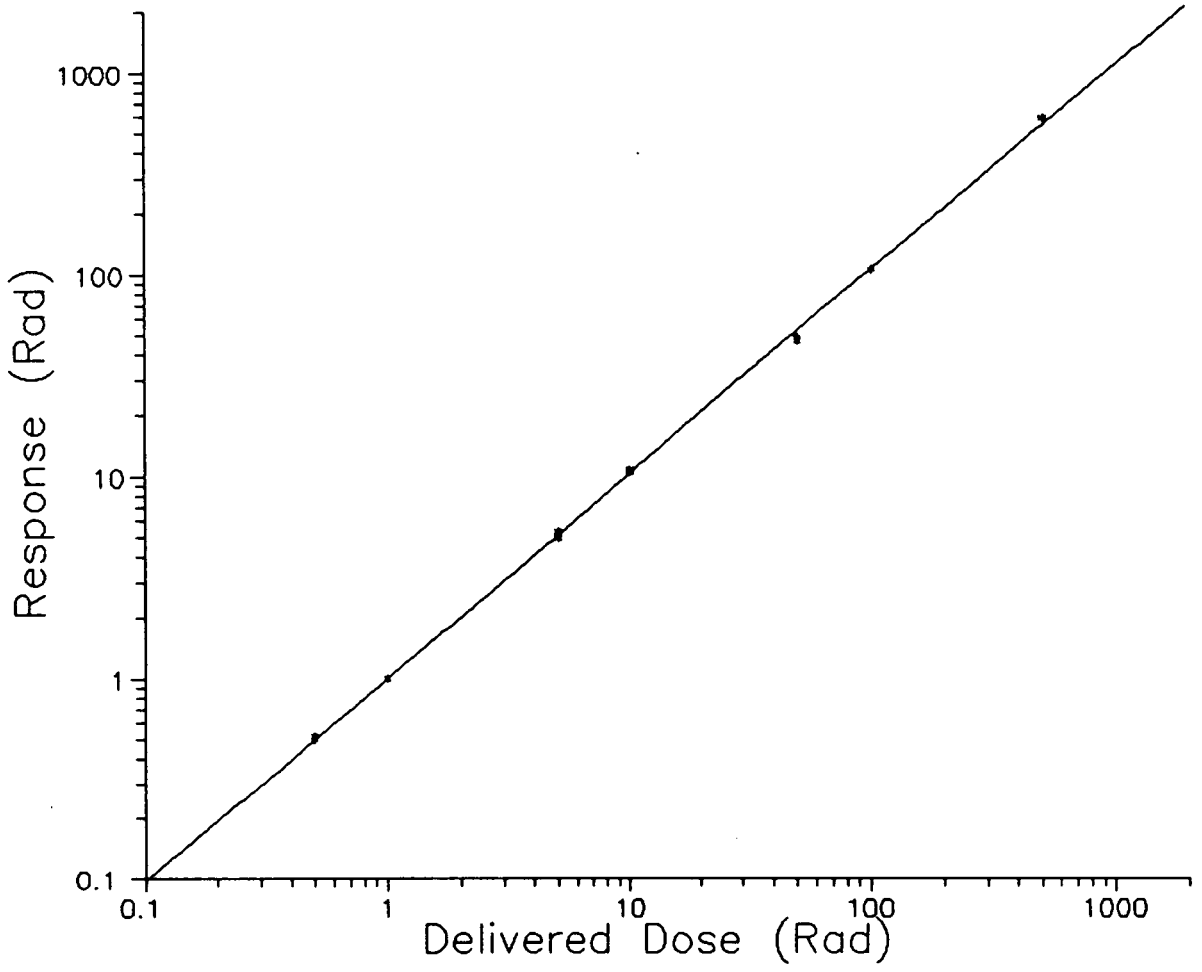

Fig. 3. Response of beta/gamma dosimeter to high-level gamma radiation (Cs-137).

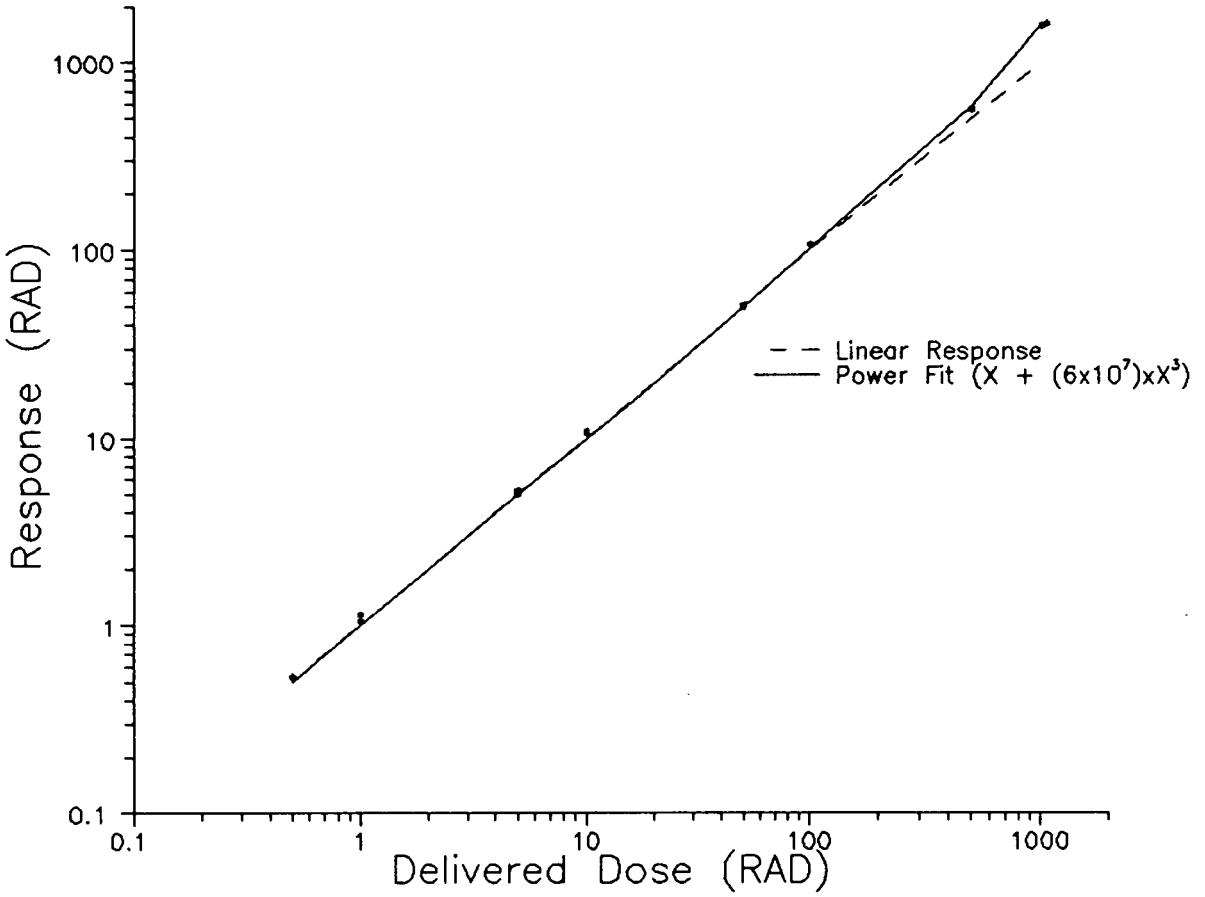

Fig. 4. Response of neutron dosimeter to high-level gamma radiation (Cs-137) showing possible correction for supralinearity.

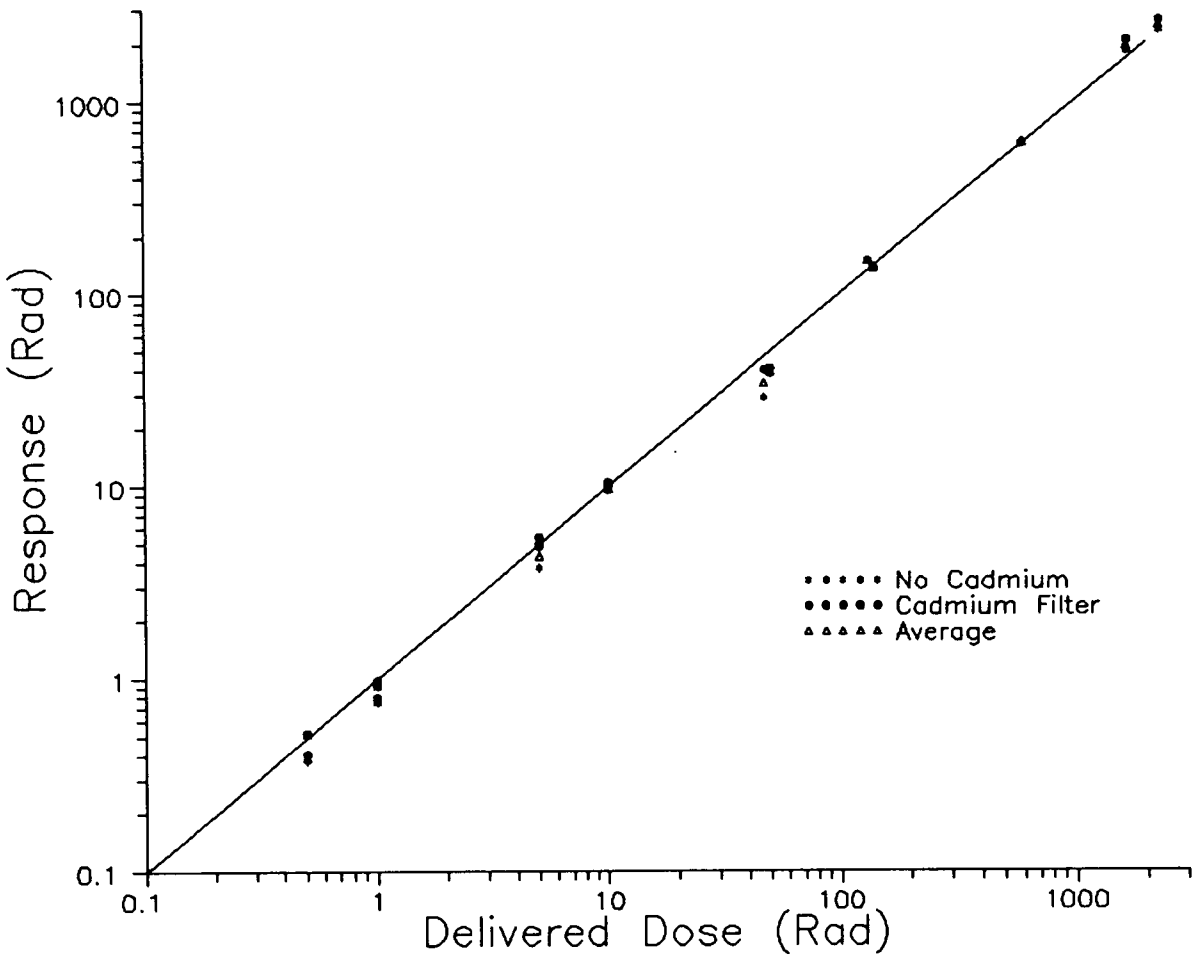

Fig. 5. Response of neutron dosimeter to high-level neutron radiation.

available in publications such as ICRP 21.[5] The response of a neutron dosimeter can be estimated by multiplying the response matrix by the neutron spectral matrix:

$$R = \Sigma\, r_i \times f_i\,,$$

where R is the dosimeter response to the neutron energy spectrum, r_i is the dosimeter response to the ith energy group, and f_i is the fluence in the ith energy group. Likewise, the absorbed dose can be estimated for a given spectrum from the multiplication of the absorbed-dose conversion factor matrix by the neutron spectral matrix:

$$D_n = \Sigma\, c_i \times f_i\,,$$

where D_n is the absorbed dose calculated and c_i is the ith energy group conversion factor matrix element. The neutron spectra of interest consist of modified fission spectra which include effects from scattering and shielding. A close approximation to any credible accident spectrum can be obtained using published neutron spectra calculated with various types of shielding materials and thicknesses.[6] Two problems must first be overcome before these data can be useful. The spectra are published with various divisions between the energy groups. Therefore, the limits, for example, on any specific energy group do not always correspond between matrices of interest. A technique of linear interpolation was used to recalculate the spectral matrix such that the energy-group limits were the same as the response matrix. The second problem concerns the relationship between calibration of the dosimeter and the response matrix. It is not possible with finite resources to calibrate or measure a calibration factor for each spectrum. Likewise, it would be difficult to establish the relationship between the response matrix and the calibrated response of the dosimeter to a gamma field. Therefore, the measured response of each dosimeter to gammas is related to the measured

typical response of the dosimeters to D_2O-moderated Cf-252. This is then related to the response to the specific spectrum of interest. The absorbed dose measured by the neutron dosimeter is calculated by:

$$D_n = \left(\frac{B_1 \times ECC_1}{RCF_1} - \frac{B_2 \times ECC_2}{RCF_2} \right) \times SC \times SF$$

where B_1 and B_2 are the reader outputs from elements 1 and 2 respectively, ECC_1 and ECC_2 are the corresponding element-correction factors, RCF_1 and RCF_2 are the corresponding reader-calibration factors, SC is the conversion factor of neutron absorbed dose to gamma-equivalent exposure for D_2O-moderated Cf-252, and SF is the spectral conversion factor. The spectral-conversion factor is calculated from:

$$SF = (D_{n1} \times R_2) / (D_{n2} \times R_1) ,$$

where D_{n1} is the calculated absorbed dose from the spectrum of interest, D_{n2} is the calculated absorbed dose for D_2O-moderated Cf-252, and R_1 and R_2 are the corresponding calculated dosimeter responses. The corresponding factors and calculations can also be performed for the non-cadmium covered TLD pair (chips 2 and 3) in the same manner.

The spectral conversion factor was calculated for over a hundred spectra taken from Ref. 6. A PC-based computer program was used with the spectra and results entered into a database system. The results of the calculations are presented in Appendices I and J. Additional spectra can be added to the database as necessary.

3.2.3 Test Conducted at Army Pulse Reactor Facility

Two tests were conducted at the Aberdeen Proving Ground's Army Pulse Radiation Facility. The dosimeters were mounted on standard DOELAP 40 x 40 x 15-cm Lucite phantoms at distances of 1.7 to 16.35 meters at the reactor height. Reference dosimetry, as well as calculated neutron doses derived from the calibration run, were provided by the test facility.

The Harshaw 8800 TLD reader at Naval Dosimetry Center was used to ensure the timely processing of the irradiated dosimeters. The neutron-dose measurement from a neutron dosimeter was described in 3.2.2. The neutron dose measured from the beta/gamma dosimeter was using the equation:

$$D_n = \left(\frac{B_4 \times ECC_4}{RCF_4} - \frac{B_1 \times ECC_1}{RCF_1} \right) \times SC \times SF \ ,$$

where B_1, B_4 are the reader outputs from elements 1 and 4 respectively, ECC_1 and ECC_4 are the corresponding element-correction factors, RCF_1 and RCF_4 are the corresponding reader-calibration factors, and SC and SF are defined previously in Section 3.2.2.

The resulting absorbed dose delivered to the dosimeters ranged from about 10 to 1000 rads for neutrons. An attempt was made to analyze the data using neutron spectra supplied by the test facility. However, unlike the spectra used in calculating other spectral-correction factors, the supplied spectra did not extend below 50 keV in neutron energy where the dosimeter has the maximum sensitivity. To fill in the low-energy portion, a bare-HPRR spectrum was normalized to the test-reactor spectrum and the low-energy data from the HPRR spectrum were added to the low-energy end of the test reactor spectral data. The spectral data were then run through the spectrum correction-factor program and the resulting correction factors used to calculate the absorbed dose

as measured by the test dosimeters. An estimate of the additional dose expected due to the low-energy neutrons resulted in a 6% correction to the reference-dose values. The results of the measurements are presented in Appendices K and L.

4. SUMMARY AND CONCLUSIONS

4.1 SUMMARY

The CEDS TLD system has been tested at accident levels with available sealed gamma and neutron radiation sources. The follow-up test with a pulsed reactor has been conducted to further test the system's capability. The system meets the accuracy requirements of DOE Order 5480.11[1] with changes in the TLD processing and dose calculation methods.

The saturation of the TLD reader's photomultiplier tubes or its electronics was identified as a possible problem for readout of accident-level doses. This problem was addressed by the use of optical filters between the TLD and the photomultiplier tube or by adjusting the high voltage of the photomultiplier tubes on the TLD reader.

For accident-level neutron dose calculations,a neutron dose computer program, PNADXPC, has been developed, and includes a menu system that allows the operator to choose the neutron spectrum to be used for each dosimeter.

The cadmium-covered chips in the neutron measurement are more reliable than bare chips, due to the fact that the incident thermal fluence can vary by a significant amount, depending upon local scattering, room return, and source moderation. Since the TLDs are very sensitive to thermal neutrons, it is best to eliminate the direct thermal fluence by use of a cadmium filter. This applies specifically to the use of the beta/gamma unit as a PNAD.

In the test conducted at the APRF, the dosimeters performed in an adequate manner with the exception of the responses at the highest doses, near 1000 rad. One neutron dosimeter and three of the four beta/gamma dosimeters exceeded the 30% performance criterion. The overresponse at high doses is mostly attributable to supralinearity of the TLD. The error at the lower-dose end is

more likely to be due to neutron scattering. This does not take into account the uncertainty and error in the reference-dosimetry values provided by APRF. The minimum uncertainty is estimated to be at least 10%, and the error offset may be larger. Using the DOELAP method of evaluating the dosimeter units, none of the dosimeters failed to respond within the acceptable limits. It should be noted that the majority of the dosimeters overresponded and, therefore, are in error on the conservative side, as is desirable.

4.2 CONCLUSIONS

The CEDS TLD-based dosimeter incorporated with the neutron-spectrum correction provides a rapid, inexpensive, and practical means of determining neutron- and gamma-radiation doses from a nuclear accident. It meets the acceptable limits set by DOE Order 5480.11.

The routinely issued CEDS personnel dosimeter is used for PNAD application. It is referred to as the PNAD, following a nuclear accident. The combination of the CEDS beta/gamma dosimeter and neutron dosimeter mounted on a 20 x 20 x 10-cm Lucite phantom is in use for the FNAD implementation.

The neutron-dose and gamma-dose estimations are performed rapidly by the processing of the dosimeters and the application of the spectral correction factors for neutron-dose analyses.

5. ACKNOWLEDGEMENTS

The authors thank Mr. Mark Buckner for help in the test conducted at the Army Pulse Radiation Facility (APRF), and Dr. Steve Sims for valuable comments. We also thank Commander Joseph DeCicco and Dr. Steve Doremus from the Naval Dosimetry Center for providing TLD readout systems and technical assistance in reading the dosimeters for the APRF test. We appreciate Frances Cinelli's help in preparing this manuscript.

6. REFERENCES

1. U.S. Department of Energy, "Radiation Protection for Occupational Workers," DOE Order 5480.11.

2. Sims, C. S., "Nuclear Accident Dosimetry Intercomparison Studies," Health Physics, 57:439-448, 1989.

3. Harshaw/Filtrol, "Solicitation, Offer, and Acceptance No. BP2-CT290-63," Technical Proposal, July 30, 1987.

4. Liu, C. J.; C. S. Sims; and J. W. Poston, "The Development, Characterization, and Performance Evaluation of a New Combination Type Personnel Neutron Dosimeter," Oak Ridge National Laboratory Report ORNL-6593, 1989.

5. International Commission of Radiological Protection, Data for Protection Against Ionizing Radiation From External Sources: Supplement to ICRP Publication 15, New York: ICRP Publication 21, 1971.

6. International Atomic Energy Agency, Compendium of Neutron Spectra in Criticality Accident Dosimetry, Vienna:IAEA; IAEA Technical Report Series No. 180; 1978.

7. APPENDICES

Appendix A	Initial Study of the Effects of Phantom Size On The Response of a TLD-based Fixed Nuclear Accident Dosimeter
Appendix B	Calibration of beta/gamma dosimeters in a 250-mR gamma field from Cs-137 with calibration factors (CF_y)
Appendix C	Calibration of beta/gamma dosimeters to 250 mrem of ^{252}Cf neutrons moderated by 15 cm of D_20
Appendix D	Calibration of neutron dosimeters in a 250-mR gamma field from Cs-137 with calibration factors (CF_y)
Appendix E	Calibration of neutron dosimeters with 250 mrem ^{252}Cf neutrons moderated by 15 cm of D_2O
Appendix F	Measurement of high-level gamma doses from ^{137}Cs with the beta/gamma dosimeter
Appendix G	Measurement of high-level gamma doses from ^{137}Cs with the neutron dosimeter
Appendix H	Measurement of high-level doses of neutrons from bare ^{252}Cf at 10 cm
Appendix I	Calculated spectral correction factors (SF) for non-cadmium-covered TLDs
Appendix J	Calculated spectral correction factors (SF) for cadmium-covered TLDs
Appendix K	Summary of neutron dosimeter test with pulsed reactor
Appendix L	Summary of beta/gamma dosimeter test with pulsed reactor

Appendix A

Initial Study of the Effects of Phantom Size on the Response of a TLD-based Fixed Nuclear Accident Dosimeter

INTRODUCTION

Efforts are now underway at ORNL to implement a Fixed Nuclear Accident Dosimeter (FNAD) to meet the requirements of DOE Order 5480.11[1]. Results of tests for both Personnel Nuclear Accident Dosimeters (PNAD) and FNADs indicate the units will meet the accuracy standards of Reference 1[2]. Due to a lack of sensitivity, it was recommended that the FNADs be placed on a phantom similar enough to the standard 40x40x15-cm polymethyl methacrylate (PMMA) phantom so that the same conversion and calibration factors can be used as for the PNAD system.

In a test of the criticality dosimeter system at Aberdeen Proving Grounds[2], several important considerations were discovered. The first was that the PNAD system, in general, overresponded to the delivered radiation. Although the reference dosimetry may not be as refined as desired, the results were supportive of a general overresponse. This error is not large enough to prohibit the use of the system in a PNAD application, but indicates that further calculations and measurements of the dosimeter response functions could improve the system. For the test conducted at Aberdeen, the FNAD system used standard neutron and beta/gamma dosimeters mounted free in air. The response of the bare TLD is strongly energy dependent and increases dramatically toward the lower-energy end of the spectrum. Without the phantom backing, the dosimeters seemed to have overresponded to the lower-energy portion of the spectrum, which will vary with dosimeter position in the experimental facility. The observed results were nonlinear with the delivered absorbed dose and in error greater than the specifications stated in Reference 1. It is postulated that the overall effect results from two factors, the overresponse at low energies and the underresponse at high energies. Compensation for the low-energy response is difficult; however, the response to higher energies can be improved by mounting the dosimeter on an appropriate phantom.

Because of the weight, physical size, and cost of a standard 40x40x15-cm PMMA phantom, use of other phantom configurations are being explored for this application. The most direct approach is to reduce the size of the phantom such that the detector response is near to the response when mounted on a full-size phantom, but small enough in size to be practical in application. Other configurations will be explored in the near future.

Phantom Size-Effect Measurements

Twenty-one neutron-type dosimeter cards were characterized by exposing them in holders on the center of a standard phantom at 0.75 meters to a calibrated 200-mrem neutron dose from a bare ^{252}Cf source. Each characterization measurement was repeated so as to establish a good calibration number for each card. Only the Cd-covered pair of TLD chips on each card were used for the final data analysis. In order to increase the phantom effect (the albedo response), the belt loops on the back of each of the holders were removed. This is recommended for field application as well, both for the increase in sensitivity and to differentiate the FNAD holders from those used only for personnel monitoring. Four exposures were made on a standard phantom with the belt loops in place, and the response was averaged. All measurements with the bare ^{252}Cf source were normalized to this average.

Eight different phantom configurations were tested. The base phantom was 10x15x5 cm to which blocks of PMMA could be added to increase the physical dimensions. The dimensions of the phantoms tested are listed in Table 1. Each phantom was tested two or four times with a single dosimeter mounted with the dosimeter holder centered on the front phantom face with the long axis

Table 1 Response of ORNL neutron dosimeter to neutrons mounted on various-sized phantoms.			
Phantom Size (cm)	# of Measurements	Average % Response	% Standard Deviation
10x15x5	4	56	3
15x15x5	2	62	4
10x15x10	4	67	6
15x20x5	4	70	7
20x20x5	4	75	6
15x15x10	2	79	5
15x20x10	4	101	10
20x20x10	4	101	6
20x20x15	0	(107 calc)	
30x30x10	0	(114 calc)	
40x40x15	42	119	4.5

of each parallel to the other. The exposures were the same as with the calibration exposures and at the same distance. Variation from one exposure to the next is expected to be less than 1% with an overall error of less that 5% of the delivered dose equivalent. The dosimeter results were corrected by the previously measured calibration factor, normalized to the standard configuration, multiplied by 100, and divided by the delivered calibration dose to obtain a percent response. The average percent response for each phantom is given in Table 1 along with the standard deviation given as a percent of the delivered dose.

In an attempt to understand the effect of the phantom size on the detector response without using a complicated model, a crude calculation was made. This involved assuming that each element of the phantom potentially contributed the same to the scattered neutron field, including secondary and higher-order scattering. The contribution of each element would then be attenuated by the

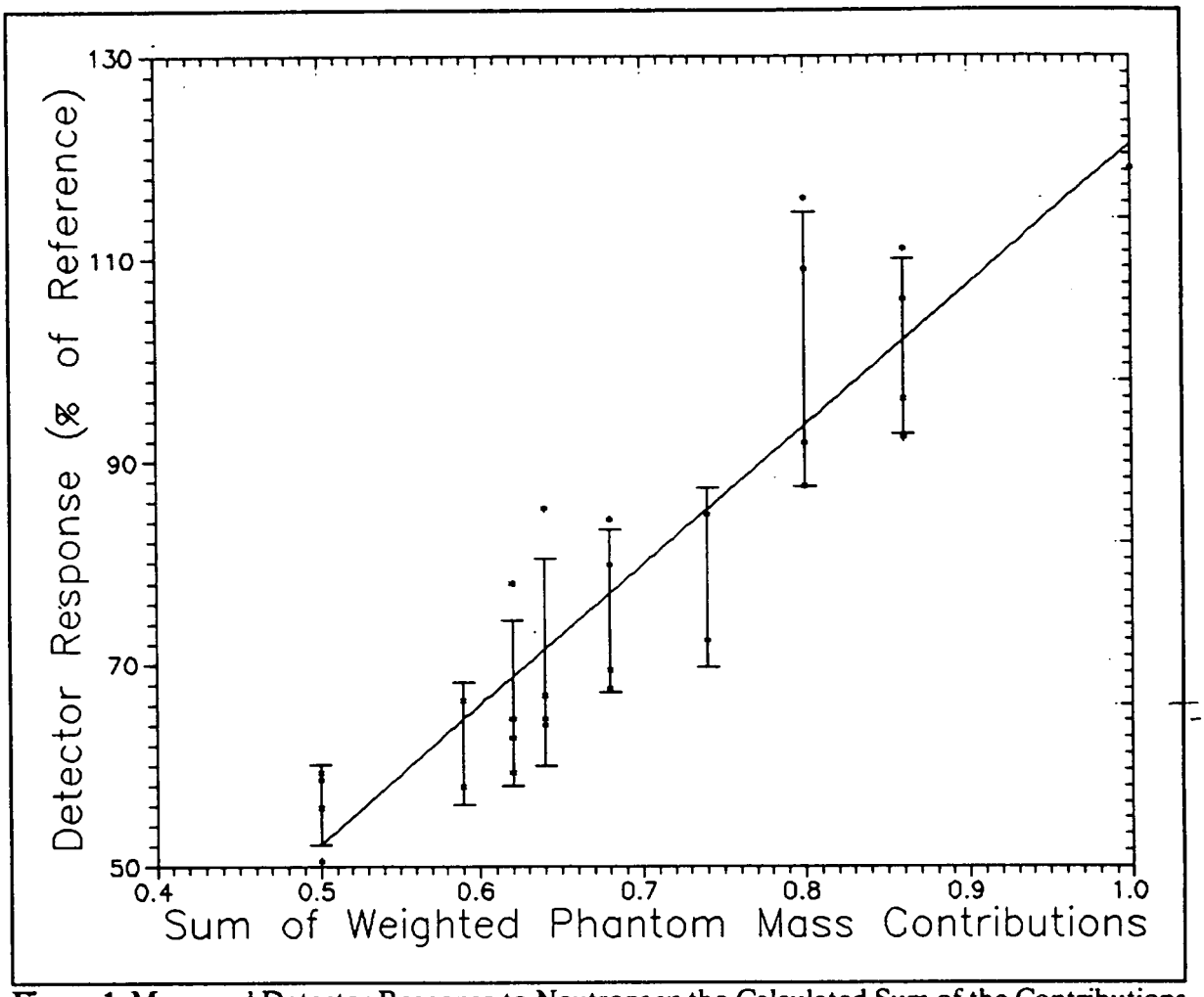

Figure 1 Measured Detector Response to Neutrons vs the Calculated Sum of the Contributions from all Phantom Elements.

material between the volume element and the detector. The major portion of the neutron field of interest to TLD dosimetry is in the low-energy end of the spectrum. The attenuation length was, therefore, assumed to be 2.5 cm. The sum was then taken of all the volume elements' relative contributions and corrected for the attentuation to the detector by a rough numerical integration. The sum for each phantom was then normalized to the sum for a standard 40x40x15-cm phantom. A plot of the sum of the weighted phantom mass contributions vs the detector response is shown in Fig. 1. A linear fit to this plot shows that the calculation is accurate to the limits of the measurement and the error in the calculations. Based on this success, a prediction is made of the response of a

dosimeter mounted on two other-sized phantoms for consideration. The results are given in parentheses in Table 1.

Bare ^{252}Cf was chosen because it represents a hard fission source with an energy distribution in the region of lowest response for a TLD system. Therefore, the response is highly dependent upon the albedo effect. A test was made using D_2O-moderated ^{252}Cf to verify that the response to a softer spectrum is greater than to a hard spectrum. The response of the modified holder on a standard phantom was 125% of the response with an unmodified holder on the same phantom. The response on a 20x20x10-cm phantom was 115% of the standard configuration.

Conclusions

The measurements made during this study resulted in data which can support the recommendation concerning the use of a phantom for FNAD application. It is observed in the data that both the 15x20x10-cm and the 20x20x10-cm phantoms produce results that are near 85% of the response on a standard phantom. The removal of the belt loops on the back of the dosimeter holder improved the response by 15%, thereby giving an effective overall response of 100% of the standard reference configuration. Based on this, it is recommended that a 20x20x10-cm phantom be used in the implementation. The smaller size can be used as an alternative with minimal loss in response if it is deemed necessary due to cost or for convenience. The lower response of the smaller phantom/dosimeter system is offset currently by the aforementioned overresponse. In the future, it will be possible to correct both effects by more-accurate modeling of the dosimeter response functions.

REFERENCES

1. U.S. Department of Energy, "Radiation Protection for Occupational Workers", DOE Order 5480.11.

2. Casson, W. H.; G. T. Mei; and M. A. Buckner, "Test and Recommendations for the Application of the CEDS Dosimeter to Nuclear Accident Dosimetry," Oak Ridge National Laboratory Report, ORNL-6667, 1991.

Appendix B

Calibration of Beta/Gamma Dosimeters in A 250-mR Gamma Field from Cs-137

Appendix B Calibration of beta/gamma dosimeters in a 250 mR gamma field from Cs-137 with calibration factors (CFc)

					CF_γ Values (mrem/nC)			
Card No.	Chip 1 (nC)	Chip 2 (nC)	Chip 3 (nC)	Chip 4 (nC)	Chip 1	Chip 2	Chip 3	Chip 4
160372	158.11	144.26	32.49	204.96	1.581	1.733	7.695	1.220
161300	147.59	149.17	31.51	176.07	1.694	1.676	7.934	1.420
162010	159.44	148.51	45.71	190.18	1.568	1.683	5.469	1.315
162010	164.61	176.12	35.03	182.32	1.519	1.419	7.136	1.371
162010	153.23	172.10	43.97	153.64	1.632	1.453	5.686	1.627
162077	158.38	154.93	47.96	203.26	1.578	1.614	5.213	1.230
162508	153.10	121.91	43.20	193.46	1.633	2.051	5.787	1.292
162529	155.05	160.20	38.55	174.49	1.612	1.561	6.485	1.433
162546	140.47	147.36	40.21	160.97	1.780	1.697	6.217	1.553
162558	140.26	131.71	38.26	174.68	1.782	1.898	6.534	1.431
162575	156.71	153.04	31.88	169.94	1.595	1.633	7.842	1.471
162596	151.53	167.34	45.05	178.19	1.650	1.494	5.549	1.403
162709	161.91	163.17	47.86	193.84	1.544	1.532	5.224	1.290
163038	159.88	164.88	43.14	201.99	1.563	1.516	5.795	1.238
165228	162.03	161.14	33.26	203.05	1.543	1.551	7.517	1.231
165275	161.69	152.15	46.51	162.32	1.546	1.643	5.375	1.540
166323	149.75	159.80	36.59	169.60	1.669	1.564	6.832	1.474
166339	161.89	157.18	34.50	194.28	1.544	1.591	7.246	1.287
166347	157.78	164.10	40.40	156.82	1.584	1.523	6.188	1.594
166370	161.08	160.28	47.40	177.18	1.552	1.560	5.274	1.411
166378	168.83	184.25	42.65	170.11	1.481	1.357	5.862	1.470
166386	157.34	144.23	36.86	140.95	1.589	1.733	6.782	1.774
166761	167.13	177.39	45.08	150.37	1.496	1.409	5.546	1.663
166774	185.08	166.89	33.38	194.06	1.351	1.498	7.490	1.288
166882	159.13	172.05	40.36	155.46	1.571	1.453	6.194	1.608
166898	160.70	162.32	36.97	165.57	1.556	1.540	6.762	1.510
166903	164.42	162.00	42.47	187.02	1.520	1.543	5.887	1.337
166906	161.84	161.30	34.90	182.59	1.545	1.550	7.163	1.369
166914	160.97	168.42	45.14	196.26	1.553	1.484	5.538	1.274
166922	165.03	152.17	48.69	196.94	1.515	1.643	5.135	1.269
166937	160.20	162.77	38.84	163.91	1.561	1.536	6.437	1.525
166945	174.96	184.88	45.58	163.24	1.429	1.352	5.485	1.531
166950	173.66	159.45	38.96	178.33	1.440	1.568	6.417	1.402
166953	159.94	160.99	37.40	178.82	1.563	1.553	6.684	1.398
166968	166.06	149.96	38.28	183.40	1.505	1.667	6.531	1.363
166999	171.78	172.66	35.59	187.03	1.455	1.448	7.024	1.337
167015	165.11	168.46	39.80	168.55	1.514	1.484	6.281	1.483
167023	161.96	161.57	46.98	178.00	1.544	1.547	5.321	1.404

Appendix B Calibration of beta/gamma dosimeters in a 250 mR gamma field from Cs-137 with calibration factors (CFc)

					CF_γ Values (mrem/nC)			
Card No.	Chip 1 (nC)	Chip 2 (nC)	Chip 3 (nC)	Chip 4 (nC)	Chip 1	Chip 2	Chip 3	Chip 4
167029	174.05	170.34	39.96	196.12	1.436	1.468	6.256	1.275
167040	167.24	164.33	33.14	175.30	1.495	1.521	7.544	1.426
167049	177.59	168.79	35.42	175.16	1.408	1.481	7.058	1.427
167057	168.18	160.54	42.73	192.02	1.487	1.557	5.851	1.302
167130	150.55	153.96	42.15	180.02	1.661	1.624	5.931	1.389
167135	145.16	168.72	46.96	177.26	1.722	1.482	5.324	1.410
167139	154.81	155.28	36.44	150.13	1.615	1.610	6.861	1.665
167147	164.15	153.87	43.22	152.58	1.523	1.625	5.784	1.638
167154	155.47	165.49	38.69	173.30	1.608	1.511	6.462	1.443
167155	152.71	147.71	40.39	165.03	1.637	1.693	6.190	1.515
167162	155.54	154.72	55.13	183.07	1.607	1.616	4.535	1.366
167163	150.11	168.26	35.63	177.37	1.665	1.486	7.017	1.409
167171	149.79	154.44	48.07	171.39	1.669	1.619	5.201	1.459
167178	158.73	162.56	38.43	160.50	1.575	1.538	6.505	1.558
167186	143.40	151.98	37.93	174.61	1.743	1.645	6.591	1.432
167205	172.31	175.84	37.73	195.90	1.451	1.422	6.626	1.276
167213	168.03	157.12	46.83	179.80	1.488	1.591	5.338	1.390
167215	168.76	175.79	41.34	185.21	1.481	1.422	6.047	1.350
167221	163.31	159.16	40.04	157.59	1.531	1.571	6.244	1.586
167229	162.86	168.58	57.63	172.35	1.535	1.483	4.338	1.451
167237	164.11	175.38	52.64	172.96	1.523	1.425	4.7492	1.445
167245	154.74	158.30	42.26	164.13	1.616	1.579	5.916	1.523
167260	170.67	167.08	49.24	156.12	1.465	1.496	5.077	1.601
167270	161.84	157.32	36.08	181.46	1.545	1.589	6.929	1.378
167276	156.06	154.67	43.65	170.75	1.602	1.616	5.727	1.464
167278	165.43	155.82	39.56	168.64	1.511	1.604	6.320	1.482
167283	174.13	165.44	44.93	179.03	1.436	1.511	5.564	1.396
167290	159.16	162.49	33.60	172.34	1.571	1.539	7.440	1.451
167298	173.78	153.88	43.20	164.80	1.439	1.625	5.787	1.517
167306	172.67	174.71	44.89	187.22	1.448	1.431	5.569	1.335
167307	160.03	160.22	35.51	147.91	1.562	1.560	7.040	1.690
167315	159.20	159.77	46.39	180.99	1.570	1.565	5.389	1.381
167322	153.12	159.36	41.90	178.31	1.633	1.569	5.967	1.402
167330	161.77	150.95	47.99	186.67	1.545	1.656	5.209	1.339
167338	157.68	150.23	44.25	176.82	1.585	1.664	5.650	1.414
167346	156.32	173.16	37.45	156.30	1.599	1.444	6.676	1.599
167352	170.45	164.80	38.80	162.67	1.467	1.517	6.443	1.537
167353	172.27	162.92	36.47	150.38	1.451	1.534	6.855	1.662

Appendix B Calibration of beta/gamma dosimeters in a 250 mR gamma field from Cs-137 with calibration factors (CFc)

					CF_γ Values (mrem/nC)			
Card No.	Chip 1 (nC)	Chip 2 (nC)	Chip 3 (nC)	Chip 4 (nC)	Chip 1	Chip 2	Chip 3	Chip 4
167357	165.66	170.04	40.06	174.89	1.509	1.470	6.241	1.429
167360	161.97	160.89	43.86	167.59	1.543	1.554	5.700	1.492
167362	155.20	149.81	33.37	162.91	1.611	1.669	7.492	1.534
167363	151.23	158.13	48.76	171.89	1.653	1.581	5.127	1.454
167369	173.57	168.36	31.82	155.29	1.440	1.485	7.857	1.610
167371	169.00	161.22	39.77	152.61	1.479	1.551	6.286	1.638
167378	156.40	166.63	37.72	166.83	1.598	1.500	6.628	1.499
167386	175.08	156.03	40.79	173.85	1.428	1.602	6.129	1.438
167393	175.95	174.01	38.62	148.31	1.421	1.437	6.473	1.686
167401	155.84	154.53	39.57	164.91	1.604	1.618	6.318	1.516
167409	147.50	151.31	41.18	176.19	1.695	1.652	6.071	1.419
167410	153.43	156.63	39.60	164.94	1.629	1.596	6.313	1.516
167418	168.90	154.28	37.68	168.03	1.480	1.620	6.635	1.488
167418	144.44	152.05	36.99	179.36	1.731	1.644	6.759	1.394
167425	155.60	153.99	33.96	171.68	1.607	1.623	7.362	1.456
167433	142.31	159.13	40.65	152.88	1.757	1.571	6.150	1.635
166887	170.44	158.08	43.65	188.64	1.467	1.581	5.727	1.325
Averages	160.83	160.56	40.79	173.55	1.559	1.563	6.229	1.450

Appendix C

Calibration of Beta/Gamma Dosimeters to 250 mrem of ^{252}Cf Neutrons Moderated by 15 cm of D_2O

Appendix C Calibration of beta/gamma dosimeters to 250 mrem of ^{252}Cf neutrons moderated by 15 cm of D_2O

Card No.	Chip 1 (nC)	Chip 2 (nC)	Chip 3 (nC)	Chip 4 (nC)	Chip 4 CF_n (mrem/nC)
160372	29.00	29.73	9.73	1538.53	6.154
161300	43.28	46.42	12.58	1541.29	6.165
162010	40.99	60.95	20.09	1255.35	5.021
162077	46.61	51.84	24.85	1607.38	6.430
162508	32.40	30.98	16.36	1285.96	5.144
162529	32.65	40.59	11.84	1283.66	5.135
162546	35.35	39.15	18.04	1279.45	5.118
162558	31.66	30.13	11.63	1438.61	5.754
162575	36.52	44.64	12.20	1496.69	5.987
162596	35.05	41.17	15.15	1406.97	5.628
162709	38.95	46.59	16.89	1482.26	5.929
163038	35.50	57.80	19.29	1455.95	5.824
165228	33.53	26.55	10.40	1539.06	6.156
165275	34.69	39.07	15.65	1397.09	5.588
166323	38.47	40.43	14.71	1410.00	5.640
166339	35.35	36.50	14.01	1421.11	5.684
166347	35.77	41.70	14.77	1244.67	4.979
166370	35.33	38.73	15.89	1251.07	5.004
166378	37.16	52.33	13.38	1232.06	4.928
166761	46.78	61.32	12.67	1313.44	5.254
166774	54.27	52.48	11.51	1479.56	5.918
166882	38.18	44.43	12.86	1239.63	4.959
166898	36.37	39.10	14.67	1315.75	5.263
166903	35.39	39.07	16.40	1498.68	5.995
166906	36.22	41.06	11.86	1506.76	6.027
166914	34.70	41.86	14.67	1653.61	6.614
166922	34.08	37.36	13.11	1532.47	6.130
166937	41.06	51.51	13.15	1380.55	5.522
166945	38.02	43.33	11.94	1306.40	5.226
166950	42.66	40.17	14.19	1408.28	5.633
166953	34.04	34.94	11.04	1294.78	5.179
166968	43.42	42.85	14.04	1486.87	5.947

Appendix C Calibration of beta/gamma dosimeters to 250 mrem of ^{252}Cf neutrons moderated by 15 cm of D_2O

Card No.	Chip 1 (nC)	Chip 2 (nC)	Chip 3 (nC)	Chip 4 (nC)	Chip 4 CF_n (mrem/nC)
167290	33.36	37.93	10.53	1255.31	5.021
167298	46.26	42.35	11.99	1406.65	5.627
167306	38.42	42.11	14.59	1456.52	5.826
167315	33.94	38.13	16.11	1221.07	4.884
167322	40.38	42.58	13.28	1357.33	5.429
167330	40.38	36.76	17.56	1320.93	5.284
167338	36.90	36.33	11.78	1515.57	6.062
167346	35.47	42.73	9.57	1328.79	5.315
167352	37.90	43.65	9.84	1388.41	5.554
167353	36.04	38.31	14.45	1159.67	4.639
167357	36.56	41.92	14.44	1350.90	5.404
167360	39.77	43.02	12.97	1386.41	5.546
167362	34.89	37.01	9.10	1352.98	5.412
167363	31.78	37.51	14.54	1330.30	5.321
167369	48.08	47.32	12.00	1337.35	5.349
167371	41.39	43.96	11.81	1372.29	5.489
167378	37.04	46.74	12.69	1332.63	5.331
167386	39.27	37.60	10.18	1300.97	5.204
167393	36.48	47.18	12.12	1251.26	5.005
167401	36.50	37.65	14.69	1323.51	5.294
167409	33.68	37.09	13.06	1356.94	5.428
167410	34.10	37.57	9.96	1316.75	5.267
167418	36.77	39.20	12.58	1537.41	6.150
167425	38.37	43.43	11.63	1371.03	5.484
167433	37.18	45.97	14.65	1343.77	5.375
167433	38.35	37.71	16.59	1674.41	6.698
Averages	38.16	42.63	13.74	1368.45	

Appendix D

Calibration of Neutron Dosimeters in A 250-mR Gamma Field From Cs-137 with Calibration Factors (CF_c)

Appendix D Calibration of neutron dosimeters in a 250 mR gamma field from Cs-137 with calibration factors (CF_γ)

Card no.	Chip 1 (nC)	Chip 2 (nC)	Chip 3 (nC)	Chip 4 (nC)	CFγ (mrem/nC) Chip 1	Chip 2	Chip 3	Chip 4
900727	171.77	175.20	168.94	170.48	1.455	1.427	1.480	1.466
900730	166.96	157.22	168.51	163.07	1.497	1.590	1.484	1.533
900735	171.96	170.09	169.21	176.28	1.454	1.470	1.477	1.418
900738	161.91	170.32	160.46	163.63	1.544	1.468	1.558	1.528
900739	165.37	157.97	165.95	159.86	1.512	1.583	1.506	1.564
900743	173.36	174.81	163.04	159.89	1.442	1.430	1.533	1.564
900746	161.87	149.81	162.43	159.44	1.544	1.669	1.539	1.568
900751	158.74	156.01	170.15	156.61	1.575	1.602	1.469	1.596
900754	164.11	158.93	178.41	172.76	1.523	1.573	1.401	1.447
900761	154.23	144.71	145.79	149.13	1.621	1.728	1.715	1.676
900762	165.16	177.12	164.98	166.45	1.514	1.411	1.515	1.502
900769	155.38	153.32	163.58	167.65	1.609	1.631	1.528	1.491
900770	161.71	154.91	160.49	160.48	1.546	1.614	1.558	1.558
900774	162.16	161.63	155.61	169.32	1.542	1.547	1.607	1.476
900777	160.86	177.88	173.71	168.65	1.554	1.405	1.439	1.482
900778	166.21	164.20	167.87	162.63	1.504	1.523	1.489	1.537
900782	162.17	160.28	162.02	198.47	1.542	1.560	1.543	1.260
900790	170.64	176.10	167.83	181.08	1.465	1.420	1.490	1.381
900793	170.70	163.58	169.29	186.87	1.465	1.528	1.477	1.338
900797	186.04	166.63	169.25	184.91	1.344	1.500	1.477	1.352
900798	151.60	149.33	164.61	0.00	1.583	1.644	1.484	1.609
900798	164.32	154.79	172.32	310.66				
900799	151.46	159.86	163.18	155.84	1.651	1.564	1.532	1.604

Appendix D Calibration of neutron dosimeters in a 250 mR gamma field from Cs-137 with calibration factors (CF_γ)

Card no.	Chip 1 (nC)	Chip 2 (nC)	Chip 3 (nC)	Chip 4 (nC)	CFγ (mrem/nC) Chip 1	Chip 2	Chip 3	Chip 4
900800	185.49	169.06	167.19	155.89	1.348	1.479	1.495	1.604
900803	167.10	162.55	169.32	166.14	1.496	1.538	1.476	1.505
900804	165.88	159.82	164.21	188.55	1.507	1.564	1.522	1.326
900805	176.08	158.97	153.73	191.54	1.420	1.573	1.626	1.305
900806	159.98	149.80	158.96	162.04	1.563	1.669	1.573	1.543
900807	153.53	161.23	156.18	157.10	1.628	1.551	1.601	1.591
900808	151.58	153.32	176.11	169.61	1.649	1.631	1.420	1.474
900811	163.08	150.10	169.65	165.42	1.533	1.666	1.474	1.511
900812	177.98	148.12	153.15	191.75	1.405	1.688	1.632	1.304
900813	150.55	160.84	140.59	158.25	1.661	1.554	1.778	1.580
900814	163.84	157.31	155.62	151.59	1.526	1.589	1.606	1.649
900815	164.39	151.04	166.41	154.06	1.521	1.655	1.502	1.623
900816	146.95	148.26	150.95	149.55	1.701	1.686	1.656	1.672
900819	158.50	166.13	170.50	166.47	1.577	1.505	1.466	1.502
900820	156.67	154.13	150.69	177.00	1.596	1.622	1.659	1.412
900821	182.06	160.82	171.46	192.81	1.373	1.555	1.458	1.297
900822	173.09	166.61	162.25	159.69	1.444	1.501	1.541	1.566
900823	142.88	146.62	159.16	151.75	1.750	1.705	1.571	1.647
900824	160.55	159.49	170.35	164.02	1.557	1.567	1.468	1.524
900827	168.05	144.06	159.79	159.89	1.488	1.735	1.565	1.564
900828	148.12	181.16	159.79	166.97	1.688	1.380	1.565	1.497
900829	172.71	159.39	160.39	197.27	1.448	1.568	1.559	1.267
900830	147.12	148.28	150.67	152.29	1.699	1.686	1.659	1.642

Appendix D Calibration of neutron dosimeters in a 250 mR gamma field from Cs-137 with calibration factors (CF_γ)

Card no.	Chip 1 (nC)	Chip 2 (nC)	Chip 3 (nC)	Chip 4 (nC)	CFγ (mrem/nC) Chip 1	Chip 2	Chip 3	Chip 4
900831	171.87	159.80	160.67	161.44	1.455	1.564	1.556	1.549
900832	164.79	163.95	148.97	157.33	1.517	1.525	1.678	1.589
900835	152.97	157.51	161.19	149.84	1.634	1.587	1.551	1.668
900836	178.39	166.80	169.43	173.75	1.401	1.499	1.476	1.439
900837	165.18	154.24	156.73	141.89	1.514	1.621	1.595	1.762
900838	147.70	159.69	159.90	174.98	1.693	1.566	1.563	1.429
900839	141.21	181.61	147.80	151.50	1.770	1.377	1.691	1.650
900843	176.16	159.92	183.33	164.25	1.419	1.563	1.364	1.522
900844	174.44	157.31	163.84	194.80	1.433	1.589	1.526	1.283
900845	167.40	155.50	161.01	166.90	1.493	1.608	1.553	1.498
900846	164.82	157.78	157.38	166.39	1.517	1.584	1.589	1.502
900847	184.67	172.55	179.92	168.22	1.354	1.449	1.390	1.486
900848	175.22	160.95	157.66	168.62	1.427	1.553	1.586	1.483
900851	161.07	175.21	170.30	180.18	1.552	1.427	1.468	1.388
900852	162.04	149.49	162.58	174.87	1.543	1.672	1.538	1.430
900853	170.02	143.22	161.70	163.36	1.470	1.746	1.546	1.530
900854	153.71	158.17	149.40	163.48	1.626	1.581	1.673	1.529
900855	148.45	168.00	187.55	178.22	1.684	1.488	1.333	1.403
900856	169.30	149.74	154.08	193.61	1.477	1.670	1.623	1.291
900859	159.76	154.24	149.41	177.00	1.565	1.621	1.673	1.412
900860	167.16	166.33	162.41	173.64	1.496	1.503	1.539	1.440
900861	185.44	0.00	171.16	169.85	1.333	1.608	1.454	1.448
900861	189.67	310.92	172.83	175.54				

Appendix D Calibration of neutron dosimeters in a 250 mR gamma field from Cs-137 with calibration factors (CF_γ)

Card no.	Chip 1 (nC)	Chip 2 (nC)	Chip 3 (nC)	Chip 4 (nC)	CFγ (mrem/nC) Chip 1	Chip 2	Chip 3	Chip 4
900862	161.45	156.53	170.97	166.24	1.548	1.597	1.462	1.504
900863	178.27	175.29	156.55	160.75	1.402	1.426	1.597	1.555
900864	188.28	143.04	155.06	188.37	1.328	1.748	1.612	1.327
900866	149.78	157.93	178.45	150.65	1.669	1.583	1.401	1.659
900867	171.61	183.18	173.29	182.22	1.457	1.365	1.443	1.372
900868	165.79	173.63	152.88	184.88	1.508	1.440	1.635	1.352
900869	175.55	164.11	172.86	183.44	1.424	1.523	1.446	1.363
900870	153.44	143.67	153.59	160.99	1.629	1.740	1.628	1.553
900871	178.22	176.07	166.68	162.45	1.403	1.420	1.500	1.539
900874	154.04	173.56	161.51	154.28	1.623	1.440	1.548	1.620
900875	177.39	167.49	175.49	192.35	1.409	1.493	1.425	1.300
900876	152.46	165.72	152.88	173.14	1.640	1.509	1.635	1.444
900957	154.15	163.50	167.20	160.36	1.622	1.529	1.495	1.559
900965	173.74	169.16	173.81	169.57	1.439	1.478	1.438	1.474
900972	171.68	145.59	176.70	187.59	1.456	1.717	1.415	1.333
900973	184.99	161.90	190.74	162.63	1.351	1.544	1.311	1.537
900981	172.51	164.56	167.24	169.15	1.449	1.519	1.495	1.478
900982	155.58	154.85	153.66	166.23	1.607	1.614	1.627	1.504
900988	161.86	150.04	167.71	166.72	1.545	1.666	1.491	1.500
900989	154.29	156.71	164.12	160.68	1.620	1.595	1.523	1.556
900996	161.61	163.75	169.08	176.44	1.547	1.527	1.479	1.417
900997	154.94	159.08	173.38	170.43	1.614	1.572	1.442	1.467
901004	169.17	172.47	154.05	177.77	1.478	1.450	1.623	1.406

Appendix D Calibration of neutron dosimeters in a 250 mR gamma field from Cs-137 with calibration factors (CF_γ)

Card no.	Chip 1 (nC)	Chip 2 (nC)	Chip 3 (nC)	Chip 4 (nC)	CFγ (mrem/nC) Chip 1	Chip 2	Chip 3	Chip 4
901005	176.61	163.52	166.46	166.70	1.416	1.529	1.502	1.500
901012	184.30	156.81	161.18	165.93	1.356	1.594	1.551	1.507
901013	165.65	157.96	169.12	153.12	1.509	1.583	1.478	1.633
901021	158.45	174.36	155.28	158.55	1.578	1.434	1.610	1.577
901121	165.28	190.42	174.05	164.21	1.513	1.313	1.436	1.522
901137	170.47	148.67	188.37	178.66	1.467	1.682	1.327	1.399
901145	168.06	161.21	168.08	171.62	1.488	1.551	1.487	1.457
901153	180.05	169.06	171.23	179.59	1.389	1.479	1.460	1.392
901169	170.00	171.16	164.35	187.25	1.471	1.461	1.521	1.335
Averages	165.41	161.09	164.36	168.68				

Appendix E

Calibration of Neutron Dosimeters with 250 mrem ^{252}Cf Neutrons Moderated by 15 cm of D_2O

Appendix E Calibration of neutron dosimeters with 250 mrem ^{252}Cf neutrons moderated by 15 cm of D_2O

					Gamma Subtraction		CF_n	
Card No.	Chip 1	Chip 2	Chip 3	Chip 4	1 - 2	4 - 3	Cd Covered	No Cd
	(nC)	(nC)	(nC)	(nC)	(nC)	(nC)	(mrem/nC)	(mrem/nC)
900727	1043.74	50.22	39.53	1327.42	993.52	1287.89	0.2516	0.1941
900730	1120.49	39.95	38.05	1419.67	1080.54	1381.62	0.2314	0.1809
900735	1144.07	47.17	35.68	1460.64	1096.90	1424.96	0.2279	0.1754
900738	1065.07	44.06	50.41	1367.54	1021.01	1317.13	0.2449	0.1898
900739	1060.92	39.76	39.11	1292.24	1021.16	1253.13	0.2448	0.1995
900743	1065.40	47.01	36.73	1315.91	1018.39	1279.18	0.2455	0.1954
900746	1133.64	39.75	36.25	1399.06	1093.89	1362.81	0.2285	0.1834
900751	1155.17	41.95	39.33	1446.78	1113.22	1407.45	0.2246	0.1776
900754	840.25	35.28	38.28	1296.64	804.97	1258.36	0.3106	0.1987
900761	1028.12	36.73	32.37	1334.24	991.39	1301.87	0.2522	0.1920
900762	1072.27	45.91	38.79	1351.08	1026.36	1312.29	0.2436	0.1905
900769	1070.09	40.46	40.40	1438.82	1029.63	1398.42	0.2428	0.1788
900770	1080.39	41.06	34.04	1355.18	1039.33	1321.14	0.2405	0.1892
900774	1098.08	43.72	35.85	1452.35	1054.36	1416.50	0.2371	0.1765
900777	1075.02	52.71	39.31	1430.75	1022.31	1391.44	0.2445	0.1797
900778	1136.93	42.11	38.71	1454.40	1094.82	1415.69	0.2283	0.1766
900782	1086.76	40.83	37.55	1577.88	1045.93	1540.33	0.2390	0.1623
900788	1112.76	37.92	37.81	1420.04	1074.84	1382.23	0.2326	0.1809
900790	1141.67	46.26	40.54	1548.62	1095.41	1508.08	0.2282	0.1658
900793	1111.51	48.79	37.53	1528.58	1062.72	1491.05	0.2352	0.1677
900797	1277.80	54.72	45.51	1653.94	1223.08	1608.43	0.2044	0.1554
900799	1090.69	46.07	35.10	1498.22	1044.62	1463.12	0.2393	0.1709
900800	1176.75	53.86	46.87	1333.70	1122.89	1286.83	0.2226	0.1943
900803	1153.25	45.34	38.43	1474.74	1107.91	1436.31	0.2257	0.1741

Appendix E Calibration of neutron dosimeters with 250 mrem ^{252}Cf neutrons moderated by 15 cm of D_2O

					Gamma Subtraction		CF_o	
Card No.	Chip 1	Chip 2	Chip 3	Chip 4	1 - 2	4 - 3	Cd Covered	No Cd
	(nC)	(nC)	(nC)	(nC)	(nC)	(nC)	(mrem/nC)	(mrem/nC)
900804	1146.14	49.65	40.50	1672.31	1096.49	1631.81	0.2280	0.1532
900805	1228.72	45.79	38.26	1646.53	1182.93	1608.27	0.2113	0.1554
900806	1039.64	39.74	33.22	1392.09	999.90	1358.87	0.2500	0.1840
900807	963.90	40.51	32.12	1290.95	923.39	1258.83	0.2707	0.1986
900808	1041.41	36.52	46.87	1422.61	1004.89	1375.74	0.2488	0.1817
900811	1301.37	41.44	41.17	1573.59	1259.93	1532.42	0.1984	0.1631
900812	1157.99	38.13	33.91	1556.84	1119.86	1522.93	0.2232	0.1642
900814	1343.98	45.06	36.65	1561.75	1298.92	1525.10	0.1925	0.1639
900816	1067.02	34.94	31.02	1319.52	1032.08	1288.50	0.2422	0.1940
900820	1098.12	39.35	32.85	1397.33	1058.77	1364.48	0.2361	0.1832
900822	1189.26	45.10	39.64	1395.67	1144.16	1356.03	0.2185	0.1844
900823	1015.05	38.55	31.52	1347.86	976.50	1316.34	0.2560	0.1899
900827	1130.41	37.42	36.47	1392.58	1092.99	1356.11	0.2287	0.1844
900828	992.64	47.08	35.18	1395.55	945.56	1360.37	0.2644	0.1838
900829	1201.18	43.98	38.01	1673.07	1157.20	1635.06	0.2160	0.1529
900830	1016.69	36.49	36.04	1350.87	980.20	1314.83	0.2550	0.1901
900831	1022.13	36.98	31.07	1213.52	985.15	1182.45	0.2538	0.2114
900835	1086.50	45.06	38.76	1382.35	1041.44	1343.59	0.2401	0.1861
900836	1191.87	52.18	45.19	1484.59	1139.69	1439.40	0.2194	0.1737
900837	1055.96	35.96	36.02	1148.61	1020.00	1112.59	0.2451	0.2247
900838	1078.50	47.11	39.00	1621.13	1031.39	1582.13	0.2424	0.1580
900843	1200.06	45.76	49.79	1425.75	1154.30	1375.96	0.2166	0.1817

Appendix E Calibration of neutron dosimeters with 250 mrem ^{252}Cf neutrons moderated by 15 cm of D_2O

					Gamma Subtraction		CF_n	
Card No.	Chip 1	Chip 2	Chip 3	Chip 4	1 - 2	4 - 3	Cd Covered	No Cd
	(nC)	(nC)	(nC)	(nC)	(nC)	(nC)	(mrem/nC)	(mrem/nC)
900844	1105.89	63.82	61.96	1463.86	1042.07	1401.90	0.2399	0.1783
900845	1070.25	41.77	38.99	1325.62	1028.48	1286.63	0.2431	0.1943
900847	1166.24	55.90	50.84	1433.09	1110.34	1382.25	0.2252	0.1809
900848	1045.32	34.16	32.24	1273.04	1011.16	1240.80	0.2472	0.2015
900851	1120.86	53.13	39.37	1569.35	1067.73	1529.98	0.2341	0.1634
900852	1097.71	49.04	40.27	1501.05	1048.67	1460.78	0.2384	0.1711
900853	1096.92	37.49	37.85	1352.91	1059.43	1315.06	0.2360	0.1901
900854	1088.36	42.95	32.37	1413.40	1045.41	1381.03	0.2391	0.1810
900855	1067.16	50.54	56.31	1491.00	1016.62	1434.69	0.2459	0.1743
900856	1097.71	42.07	34.12	1484.68	1055.64	1450.56	0.2368	0.1723
900860	1201.84	49.53	40.38	1471.89	1152.31	1431.51	0.2170	0.1746
900861	1177.11	41.50	36.70	1415.39	1135.61	1378.69	0.2201	0.1813
900862	1052.34	40.37	35.74	1422.03	1011.97	1386.29	0.2470	0.1803
900863	1153.00	61.80	35.38	1389.77	1091.20	1354.39	0.2291	0.1846
900864	1273.42	41.66	36.28	1588.02	1231.76	1551.74	0.2030	0.1611
900866	1012.10	37.98	44.86	1311.92	974.12	1267.06	0.2566	0.1973
900868	1116.84	43.25	32.40	1618.66	1073.59	1586.26	0.2329	0.1576
900869	1068.99	49.50	47.80	1465.59	1019.49	1417.79	0.2452	0.1763
900870	985.34	34.17	31.30	1292.62	951.17	1261.32	0.2628	0.1982
900871	1223.03	47.14	38.54	1369.94	1175.89	1331.40	0.2126	0.1878
900874	1020.65	41.65	34.87	1227.49	979.00	1192.62	0.2554	0.2096
900875	1192.06	44.03	44.82	1584.99	1148.03	1540.17	0.2178	0.1623

Appendix E Calibration of neutron dosimeters with 250 mrem ^{252}Cf neutrons moderated by 15 cm of D_2O

					Gamma Subtraction		CF_n	
Card No.	Chip 1	Chip 2	Chip 3	Chip 4	1 - 2	4 - 3	Cd Covered	No Cd
	(nC)	(nC)	(nC)	(nC)	(nC)	(nC)	(mrem/nC)	(mrem/nC)
900876	1056.62	56.28	38.12	1535.71	1000.34	1497.59	0.2499	0.1669
900957	1060.96	41.37	37.51	1445.29	1019.59	1407.78	0.2452	0.1776
900965	1021.73	54.34	47.92	1397.89	967.39	1349.97	0.2584	0.1852
900972	1198.02	41.96	37.07	1588.05	1156.06	1550.98	0.2163	0.1612
900973	1028.02	42.01	47.47	1133.73	986.01	1086.26	0.2535	0.2301
900981	1213.45	44.05	36.19	1548.51	1169.40	1512.32	0.2138	0.1653
900982	1107.40	38.29	33.93	1489.10	1069.11	1455.17	0.2338	0.1718
900988	1079.88	38.24	36.13	1354.24	1041.64	1318.11	0.2400	0.1897
900989	908.68	33.87	30.75	1211.82	874.81	1181.07	0.2858	0.2117
900996	1081.57	41.05	35.98	1530.74	1040.52	1494.76	0.2403	0.1673
900997	999.75	36.33	36.47	1404.52	963.42	1368.05	0.2595	0.1827
901004	1088.87	43.25	31.49	1452.58	1045.62	1421.09	0.2391	0.1759
901005	1194.32	44.93	41.26	1416.34	1149.39	1375.08	0.2175	0.1818
901012	1180.79	37.43	35.80	1313.74	1143.36	1277.94	0.2187	0.1956
901013	1051.51	43.57	36.91	1217.45	1007.94	1180.54	0.2480	0.2118
901021	1174.19	49.47	39.47	1481.85	1124.72	1442.38	0.2223	0.1733
901121	1003.11	54.56	37.34	1311.99	948.55	1274.65	0.2636	0.1961
901137	1042.51	35.86	44.48	1408.69	1006.65	1364.21	0.2483	0.1833
901145	1247.73	45.15	36.42	1571.25	1202.58	1534.83	0.2079	0.1629
901153	1129.02	43.35	39.45	1373.11	1085.67	1333.66	0.2303	0.1875
901169	1162.89	43.74	35.33	1579.02	1119.15	1543.69	0.2234	0.1619
Averages	1105.32	43.79	38.59	1427.81				

Appendix F

Measurement of High-Level Doses of Neutrons from Bare ^{252}Cf at 10 cm

Appendix F Measurement of high level doses of neutrons from bare ^{252}Cf at 10 cm

Card No.	Chip 1	Chip 2	Chip 3	Chip 4	Ref Dose	Meas Dose	Meas Dose	Avg	Error
	(nC)	(nC)	(nC)	(nC)	(rad)	1-2(rad)	4-3(rad)	(rad)	(%)
900874	151	18.5	17.4	165	0.5	0.407	0.376	0.391	-22
900739	203	24.1	25.0	240	0.5	0.526	0.520	0.523	4.5
900870	188	22.0	23.7	238	0.5	0.524	0.516	0.520	4.1
900808	299	32.3	40.7	382	1	0.796	0.751	0.774	-23
900972	414	40.1	46.7	513	1	0.970	0.911	0.941	-5.9
900996	379	44.8	45.7	491	1	0.964	0.903	0.933	-6.7
900813	2289	414	592	2626	5	4.853	3.769	4.31	-14
901013	2017	198	226	2205	5	5.408	5.078	5.24	4.9
901121	1952	245	230	2384	5	5.392	5.119	5.25	5.1
900811	4837	454	548	5748	10	10.422	10.278	10.3	3.5
900814	4716	491	485	5266	10	9.744	9.498	9.62	-3.8
900819	20286	2323	2465	26439	47	39.868	28.672	34.2	-27
900746	16319	1601	1778	18903	50	40.310	38.067	39.1	-22
900997	53114	5893	6492	73327	132	146.846	148.001	147	12
900861	57164	5673	5696	66666	140	135.846	133.970	134	-3.6
900811	273965	23510	29044	335186	596	595.558	605.204	600	0.74
900828	731481	85193	79364	884256	1659	2047.75	1792.411	1920	16
900727	969788	111225	113149	1094857	2281	2589.02	2309.198	2450	7.4

Appendix G

Measurement of High-Level Doses from ^{137}Cs with the Beta/Gamma Dosimeter

Appendix G Measurement of high level gamma doses from ^{137}Cs with the beta/gamma dosimeter

Card No.	Chip 1	Chip 2	Chip 3	Chip 4	Ref Dose	Calc Dose	Error
	(nC)	(nC)	(nC)	(nC)	(rad)	(rad)	(%)
162010	327.41	348.38	78.33	302.18	0.5	0.50	0.32
167155	326.77	310.69	68.55	316.76	0.5	0.52	-3.87
167171	620.19	607.90	177.70	625.37	1	1.00	-0.50
167290	68.14	69.12	15.93	95.11	1	1.04	-3.91
167221	3598.90	3511.74	720.70	2825.90	5	5.35	-6.98
166347	3331.52	3439.53	671.23	2901.28	5	5.12	-2.50
166882	3261.24	3492.17	656.39	2844.14	5	4.97	0.51
166887	3472.25	3202.08	812.29	3825.80	5	4.94	1.11
167057	7254.23	6745.16	1430.74	7086.62	10	10.47	-4.69
167393	7796.42	7407.20	1337.25	5961.32	10	10.75	-7.55
162529	31027.86	31578.79	5881.59	28002.27	50	48.57	2.86
162558	27002.46	26544.89	6112.00	30729.65	50	46.73	6.55
167352	74054.33	69830.68	14970.01	63656.47	100	105.45	-5.45
166378	6553.47	6818.77	1691.95	5553.64	100	94.22	5.78
166914	387600.5	405438.9	95655.2	404525.4	500	584.44	-16.89
167338	382279.3	364441.7	90823.0	370360.8	500	588.45	-17.69
166999	84060.74	82197.31	17783.53	76363.03	1000	1187.75	-18.77
166945	98321.00	98930.40	20639.84	68332.14	1000	1363.99	-36.40

Appendix H

Measurement of High-Level Gamma Doses from ^{137}Cs with the Neutron Dosimeter

Appendix H Measurement of high level gamma doses from ^{137}Cs with the neutron dosimeter

Card No.	Chip 1	Chip 2	Chip 3	Chip 4	Ref Dose	Meas Dose	Error
	(nC)	(nC)	(nC)	(nC)	(rad)	2 (rad)	(%)
900804	338.75	349.11	359.47	378.20	0.5	0.53	5.5
900856	331.63	327.61	339.10	358.35	0.5	0.53	5.5
900793	780.38	769.26	784.02	849.60	1	1.14	14
900812	707.63	642.68	672.89	745.08	1	1.05	5.2
900821	3682.04	3431.96	3513.57	3806.49	5	5.17	3.5
900875	3577.83	3600.65	3667.81	3526.80	5	5.21	4.3
900868	3059.32	3603.93	3194.80	3446.89	5	5.03	0.66
900864	3443.07	2946.37	3216.08	3390.88	5	4.99	-0.11
900820	6481.09		6718.91	6356.31	10		
900860	6696.09	7315.62	7106.85	6419.49	10	10.67	6.7
900844	31539.30	32427.27	33769.26	35312.59	50	49.98	-0.03
900838	28896.02	33467.21	33358.43	33933.21	50	50.82	1.6
900805	70741.19	69650.11	67607.53	72093.73	100	106.24	6.2
900797	388403.8	385225.8	399489.7	390966.9	500	560.59	12
900836	375262.3	383429.1	404816.6	363998.1	500	557.40	11
900813	102110.3	104273.8	93985.0	107357.2	1000	1572.04	57
900829	204847.3	106081.2	107292.5	240260.3	1052	1613.83	53

Appendix I

Calculated Spectral Correction Factors (SF) for Non-cadmium-covered TLDs.

Appendix I Calculated spectral correction factors (SF) for non-cadmium covered TLDs

SF	Spectrum Type and Shielding
7.20	UNCOLLIDED FISSION SPECTRA
4.90	FISSILE SOLUTION, 2 CM RADIUS SPHERE, H2O
3.98	FISSILE SOLUTION, 5 CM RADIUS SPHERE, H2O
3.43	FISSILE SOLUTION, 10 CM RADIUS SPHERE, H2O
3.24	FISSILE SOLUTION, 30 CM RADIUS SPHERE, H2O
3.20	FISSILE SOLUTION, 50 CM RADIUS SPHERE, H2O
6.05	FISSILE SOLUTION, 2 CM RADIUS SPHERE, D2O
4.57	FISSILE SOLUTION, 5 CM RADIUS SPHERE, D2O
3.01	FISSILE SOLUTION, 10 CM RADIUS SPHERE, D2O
1.73	FISSILE SOLUTION, 30 CM RADIUS SPHERE, D2O
1.42	FISSILE SOLUTION, 50 CM RADIUS SPHERE, D2O
3.61	UNSHIELDED HPRR SPECTRUM (NEUTRON FLUENCE AT 3 METERS FROM HPRR OPERATED TO 1X10+17 FISSIONS (N/CM SQ))
1.58	CONCRETE SHIELDED HPRR SPECTRUM (NEUTRON FLUENCE AT 3 METERS)
1.71	PLEXIGLAS SHIELDED HPRR SPECTRUM (NEUTRON FLUENCE AT 3 METERS FROM HPRR OPERATED TO 1X10+17 FISSIONS (N/CM SQ))
2.63	STEEL SHIELDED HPRR SPECTRUM (NEUTRON FLUENCE AT 3 METERS FROM HPRR OPERATED TO 1X10+17 FISSIONS (N/CM SQ))
4.96	FISSION SPECTRUM THROUGH 2 CM H2O
3.46	FISSION SPECTRUM THROUGH 5 CM H2O
3.71	FISSION SPECTRUM THROUGH 10 CM H2O
2.34	FISSION SPECTRUM THROUGH 30 CM H2O
5.37	FISSION SPECTRUM THROUGH 50 CM H2O
4.42	FISSION SPECTRUM THROUGH 2 CM H2O AT SURFACE
5.72	FISSION SPECTRUM THROUGH 2 CM D2O
1.87	FISSION SPECTRUM THROUGH 5 CM D2O

Appendix I Calculated spectral correction factors (SF) for non-cadmium covered TLDs

SF	Spectrum Type and Shielding
0.76	FISSION SPECTRUM THROUGH 10 CM D2O
0.61	FISSION SPECTRUM THROUGH 30 CM D2O
0.55	FISSION SPECTRUM THROUGH 50 CM D2O
5.32	FISSION SPECTRUM THROUGH 2 CM D2O AT SURFACE
6.24	FISSION SPECTRUM THROUGH 5 CM GRAPHITE (0.25X10-1 EV WAS ASSIGNED FOR TH (THERMAL ENERGY) LOWER LEVEL)
7.47	FISSION SPECTRUM THROUGH 10 CM GRAPHITE (0.25X10-1 EV WAS ASSIGNED FOR TH (THERMAL ENERGY) LOWER LEVEL)
3.10	FISSION SPECTRUM THROUGH 20 CM GRAPHITE (0.25X10-1 EV WAS ASSIGNED FOR TH (THERMAL ENERGY) LOWER LEVEL)
0.81	FISSION SPECTRUM THROUGH 40 CM GRAPHITE (0.25X10-1 EV WAS ASSIGNED FOR TH (THERMAL ENERGY) LOWER LEVEL)
0.31	FISSION SPECTRUM THROUGH 60 CM GRAPHITE (0.25X10-1 EV WAS ASSIGNED FOR TH (THERMAL ENERGY) LOWER LEVEL)
2.05	FISSION SPECTRUM THROUGH 5 CM POLYETHYLENE (0.25X10-1 EV WAS ASSIGNED FOR TH (THERMAL ENERGY) LOWER LEVEL)
1.01	FISSION SPECTRUM THROUGH 10 CM POLYETHYLENE (0.25X10-1 EV WAS ASSIGNED FOR TH (THERMAL ENERGY) LOWER LEVEL)
0.72	FISSION SPECTRUM THROUGH 20 CM POLYETHYLENE (0.25X10-1 EV WAS ASSIGNED FOR TH (THERMAL ENERGY) LOWER LEVEL)
0.85	FISSION SPECTRUM THROUGH 40 CM POLYETHYLENE (0.25X10-1 EV WAS ASSIGNED FOR TH (THERMAL ENERGY) LOWER LEVEL)
1.15	FISSION SPECTRUM THROUGH 60 CM POLYETHYLENE (0.25X10-1 EV WAS ASSIGNED FOR TH (THERMAL ENERGY) LOWER LEVEL)
3.45	FISSION SPECTRUM THROUGH 5 CM OF 1% BORATED POLYETHYLENE (0.25X10-1 EV WAS ASSIGNED FOR TH (THERMAL ENERGY) LOWER LEVEL)
3.46	FISSION SPECTRUM THROUGH 10 CM OF 1% BORATED POLYETHYLENE (0.25X10-1 EV WAS ASSIGNED FOR TH (THERMAL ENERGY) LOWER LEVEL)
5.51	FISSION SPECTRUM THROUGH 20 CM OF 1% BORATED POLYETHYLENE (0.25X10-1 EV WAS ASSIGNED FOR TH (THERMAL ENERGY) LOWER LEVEL)
4.14	FISSION SPECTRUM THROUGH 40 CM OF 1% BORATED POLYETHYLENE (0.25X10-1 EV WAS ASSIGNED FOR TH (THERMAL ENERGY) LOWER LEVEL)
4.58	FISSION SPECTRUM THROUGH 60 CM OF 1% BORATED POLYETHYLENE (0.25X10-1 EV WAS ASSIGNED FOR TH (THERMAL ENERGY) LOWER LEVEL)
6.65	FISSION SPECTRUM THROUGH 2.5 CM OF 1% BERYLLIUM (0.25X10-1 EV WAS ASSIGNED FOR TH (THERMAL ENERGY) LOWER LEVEL)
5.55	FISSION SPECTRUM THROUGH 5 CM BERYLLIUM (0.25X10-1 EV WAS ASSIGNED FOR TH (THERMAL ENERGY) LOWER LEVEL)
2.39	FISSION SPECTRUM THROUGH 10 CM BERYLLIUM (0.25X10-1 EV WAS ASSIGNED FOR TH (THERMAL ENERGY) LOWER LEVEL)
0.75	FISSION SPECTRUM THROUGH 20 CM BERYLLIUM (0.25X10-1 EV WAS ASSIGNED FOR TH (THERMAL ENERGY) LOWER LEVEL)

Appendix I Calculated spectral correction factors (SF) for non-cadmium covered TLDs

SF	Spectrum Type and Shielding
0.29	FISSION SPECTRUM THROUGH 30 CM BERYLLIUM (0.25X10-1 EV WAS ASSIGNED FOR TH (THERMAL ENERGY) LOWER LEVEL)
7.30	FISSION SPECTRUM THROUGH 2.5 CM ALUMINUM (0.25X10-1 EV WAS ASSIGNED FOR TH (THERMAL ENERGY) LOWER LEVEL)
7.03	FISSION SPECTRUM THROUGH 5 CM ALUMINUM (0.25X10-1 EV WAS ASSIGNED FOR TH (THERMAL ENERGY) LOWER LEVEL)
6.23	FISSION SPECTRUM THROUGH 10 CM ALUMINUM (0.25X10-1 EV WAS ASSIGNED FOR TH (THERMAL ENERGY) LOWER LEVEL)
4.42	FISSION SPECTRUM THROUGH 20 CM ALUMINUM (0.25X10-1 EV WAS ASSIGNED FOR TH (THERMAL ENERGY) LOWER LEVEL)
2.01	FISSION SPECTRUM THROUGH 40 CM ALUMINUM (0.25X10-1 EV WAS ASSIGNED FOR TH (THERMAL ENERGY) LOWER LEVEL)
3.81	FISSION SPECTRUM THROUGH 10 CM CONCRETE
2.07	FISSION SPECTRUM THROUGH 20 CM CONCRETE
1.53	FISSION SPECTRUM THROUGH 30 CM CONCRETE
1.46	FISSION SPECTRUM THROUGH 40 CM CONCRETE
1.64	FISSION SPECTRUM THROUGH 60 CM CONCRETE
5.98	FISSION SPECTRUM THROUGH 5 CM CONCRETE WITH 10% IRON (0.25X10-1 EV WAS ASSIGNED FOR TH (THERMAL ENERGY) LOWER LEVEL)
3.84	FISSION SPECTRUM THROUGH 10 CM CONCRETE WITH 10% IRON (0.25X10-1 EV WAS ASSIGNED FOR TH (THERMAL ENERGY) LOWER LEVEL)
1.54	FISSION SPECTRUM THROUGH 20 CM CONCRETE WITH 10% IRON (0.25X10-1 EV WAS ASSIGNED FOR TH (THERMAL ENERGY) LOWER LEVEL)
0.70	FISSION SPECTRUM THROUGH 60 CM CONCRETE WITH 10% IRON (0.25X10-1 EV WAS ASSIGNED FOR TH (THERMAL ENERGY) LOWER LEVEL)
0.39	FISSION SPECTRUM THROUGH 100 CM CONCRETE WITH 10% IRON (0.25X10-1 EV WAS ASSIGNED FOR TH (THERMAL ENERGY) LOWER LEVEL)
5.98	FISSION SPECTRUM THROUGH 5 CM CONCRETE WITH 50% IRON (0.25X10-1 EV WAS ASSIGNED FOR TH (THERMAL ENERGY) LOWER LEVEL)
3.44	FISSION SPECTRUM THROUGH 10 CM CONCRETE WITH 50% IRON (0.25X10-1 EV WAS ASSIGNED FOR TH (THERMAL ENERGY) LOWER LEVEL)
0.91	FISSION SPECTRUM THROUGH 20 CM CONCRETE WITH 50% IRON (0.25X10-1 EV WAS ASSIGNED FOR TH (THERMAL ENERGY) LOWER LEVEL)
0.79	FISSION SPECTRUM THROUGH 60 CM CONCRETE WITH 50% IRON (0.25X10-1 EV WAS ASSIGNED FOR TH (THERMAL ENERGY) LOWER LEVEL)
0.69	FISSION SPECTRUM THROUGH 100 CM CONCRETE WITH 50% IRON (0.25X10-1 EV WAS ASSIGNED FOR TH (THERMAL ENERGY) LOWER LEVEL)
0.60	FISSION SPECTRUM THROUGH 100 CM OF 100% IRON (0.25X10-1 EV WAS ASSIGNED FOR TH (THERMAL ENERGY) LOWER LEVEL)
5.68	FISSION SPECTRUM THROUGH 5 CM IRON

Appendix I Calculated spectral correction factors (SF) for non-cadmium covered TLDs

SF	Spectrum Type and Shielding
4.57	FISSION SPECTRUM THROUGH 10 CM IRON
3.13	FISSION SPECTRUM THROUGH 20 CM IRON
2.39	FISSION SPECTRUM THROUGH 30 CM IRON
1.84	FISSION SPECTRUM THROUGH 50 CM IRON
5.09	FISSION SPECTRUM THROUGH 5 CM COPPER
3.70	FISSION SPECTRUM THROUGH 10 CM COPPER
2.20	FISSION SPECTRUM THROUGH 20 CM COPPER
1.48	FISSION SPECTRUM THROUGH 30 CM COPPER
1.10	FISSION SPECTRUM THROUGH 50 CM COPPER
6.44	FISSION SPECTRUM THROUGH 5 CM LEAD
5.75	FISSION SPECTRUM THROUGH 10 CM LEAD
4.54	FISSION SPECTRUM THROUGH 20 CM LEAD
3.65	FISSION SPECTRUM THROUGH 30 CM LEAD
2.44	FISSION SPECTRUM THROUGH 50 CM LEAD
4.79	FISSION SPECTRUM THROUGH 5 CM URANIUM-238
3.50	FISSION SPECTRUM THROUGH 10 CM URANIUM-238
2.66	FISSION SPECTRUM THROUGH 20 CM URANIUM-238
1.76	FISSION SPECTRUM THROUGH 30 CM URANIUM-238
1.38	FISSION SPECTRUM THROUGH 50 CM URANIUM-238
0.44	FISSION SPECTRUM, H2O MODERATED THROUGH 2.5 CM BERYLLIUM (0.25X10-1 EV WAS ASSIGNED FOR TH (THERMAL ENERGY) LOWER LEVEL)
1.28	FISSION SPECTRUM, H2O MODERATED THROUGH 5 CM BERYLLIUM (0.25X10-1 EV WAS ASSIGNED FOR TH (THERMAL ENERGY) LOWER LEVEL)
0.88	FISSION SPECTRUM, H2O MODERATED THROUGH 10 CM BERYLLIUM (0.25X10-1 EV WAS ASSIGNED FOR TH (THERMAL ENERGY) LOWER LEVEL)
0.37	FISSION SPECTRUM, H2O MODERATED THROUGH 20 CM BERYLLIUM (0.25X10-1 EV WAS ASSIGNED FOR TH (THERMAL ENERGY) LOWER LEVEL)

Appendix I Calculated spectral correction factors (SF) for non-cadmium covered TLDs

SF	Spectrum Type and Shielding
1.33	FISSION SPECTRUM, H2O MODERATED THROUGH 2.5 CM ALUMINUM (0.25X10-1 EV WAS ASSIGNED FOR TH (THERMAL ENERGY) LOWER LEVEL)
1.26	FISSION SPECTRUM, H2O MODERATED THROUGH 5 CM ALUMINUM (0.25X10-1 EV WAS ASSIGNED FOR TH (THERMAL ENERGY) LOWER LEVEL)
0.93	FISSION SPECTRUM, H20 MODERATED THROUGH 10 CM ALUMINUM (0.25X10-1 EV WAS ASSIGNED FOR TH (THERMAL ENERGY) LOWER LEVEL)
1.04	FISSION SPECTRUM, H2O MODERATED THROUGH 20 CM ALUMINUM (0.25X10-1 EV WAS ASSIGNED FOR TH (THERMAL ENERGY) LOWER LEVEL)
1.65	FISSION SPECTRUM, H2O MODERATED THROUGH 10 CM CONCRETE
1.33	FISSION SPECTRUM, H2O MODERATED THROUGH 20 CM CONCRETE
1.31	FISSION SPECTRUM, H2O MODERATED THROUGH 30 CM CONCRETE
1.72	FISSION SPECTRUM, H2O MODERATED THROUGH 40 CM CONCRETE
1.04	FISSION SPECTRUM, H2O MODERATED THROUGH 60 CM CONCRETE
1.87	FISSION SPECTRUM, H2O MODERATED THROUGH 2 CM IRON (THREE COLUMNS OF QUANTITY VALUES ARE LISTED IN THE ORIGINAL SOURCE FOR 5, 10, 20, 30 & 50 CM. THE CORRESPONDING DISTANCE, 2, 20 & 50 CM WERE DETERMINED FROM THE GRAPHICAL DATA IN THE ORIGINAL
1.88	FISSION SPECTRUM, H2O MODERATED THROUGH 20 CM IRON (THREE COLUMNS OF QUANTITY VALUES ARE LISTED IN THE ORIGINAL SOURCE FOR 5, 10, 20, 30 & 50 CM. THE CORRESPONDING DISTANCE, 2, 20 & 50 CM WERE DETERMINED FROM THE GRAPHICAL DATA IN THE ORIGIN
1.21	FISSION SPECTRUM, H2O MODERATED THROUGH 50 CM IRON (THREE COLUMNS OF QUANTITY VALUES ARE LISTED IN THE ORIGINAL SOURCE FOR 5, 10, 20, 30 & 50 CM. THE CORRESPONDING DISTANCE, 2, 20 & 50 CM WERE DETERMINED FROM THE GRAPHICAL DATA IN THE ORIGIN
2.14	FISSION SPECTRUM, H2O MODERATED THROUGH 5 CM COPPER
1.70	FISSION SPECTRUM, H2O MODERATED THROUGH 10 CM COPPER
1.51	FISSION SPECTRUM, H2O MODERATED THROUGH 20 CM COPPER
1.22	FISSION SPECTRUM, H2O MODERATED THROUGH 30 CM COPPER
0.77	FISSION SPECTRUM, H2O MODERATED THROUGH 50 CM COPPER
1.98	FISSION SPECTRUM, H2O MODERATED THROUGH 5 CM LEAD
1.65	FISSION SPECTRUM, H2O MODERATED THROUGH 10 CM LEAD
1.49	FISSION SPECTRUM, H2O MODERATED THROUGH 30 CM LEAD

Appendix I Calculated spectral correction factors (SF) for non-cadmium covered TLDs

SF	Spectrum Type and Shielding
1.22	FISSION SPECTRUM, H2O MODERATED THROUGH 50 CM LEAD
7.50	Cf-252 BARE
1.00	CF-252 D2O MODERATED
2.17	SHEBA: A SOLUTION CRITICAL ASSEMBLY
4.40	ABERDEEN REFERENCE SPECTRUM AT 10 FEET
4.69	SPECTRUM AT 5 FT FROM ABERDEEN REACTOR
4.42	SPECTRUM AT 10 AT ABERDEEN REACTOR
3.81	SPECTRUM AT 30 FT FROM ABERDEEN REACTOR
3.41	COMBINATION OF ABERDEEN REF SPECTRUM AND HPRR

Appendix J

Calculated Spectral Correction Factors (SF) for Cadmium-covered TLDs.

Appendix J Calculated spectral correction factors (SF) for cadmium covered TLDs

SF	Spectrum Type and Shielding
7.09	UNCOLLIDED FISSION SPECTRUM
4.79	FISSILE SOLUTION, 2 CM RADIUS SPHERE, H2O
3.93	FISSILE SOLUTION, 5 CM RADIUS SPHERE, H2O
3.38	FISSILE SOLUTION, 10 CM RADIUS SPHERE, H2O
3.21	FISSILE SOLUTION, 30 CM RADIUS SPHERE, H2O
3.17	FISSILE SOLUTION, 50 CM RADIUS SPHERE, H2O
5.92	FISSILE SOLUTION, 2 CM RADIUS SPHERE, D2O
4.46	FISSILE SOLUTION, 5 CM RADIUS SPHERE, D2O
2.96	FISSILE SOLUTION, 10 CM RADIUS SPHERE, D2O
1.72	FISSILE SOLUTION, 30 CM RADIUS SPHERE, D2O
1.41	FISSILE SOLUTION, 50 CM RADIUS SPHERE, D2O
3.61	UNSHIELDED HPRR SPECTRUM (NEUTRON FLUENCE AT 3 METERS FROM HPRR OPERATED TO 1X10+17 FISSIONS (N/CM SQ))
1.69	CONCRETE SHIELDED HPRR SPECTRUM (NEUTRON FLUENCE AT 3 METERS)
1.91	PLEXIGLAS SHIELDED HPRR SPECTRUM (NEUTRON FLUENCE AT 3 METERS FROM HPRR OPERATED TO 1X10+17 FISSIONS (N/CM SQ))
2.61	STEEL SHIELDED HPRR SPECTRUM (NEUTRON FLUENCE AT 3 METERS FROM HPRR OPERATED TO 1X10+17 FISSIONS (N/CM SQ))
4.88	FISSION SPECTRUM THROUGH 2 CM H2O
3.47	FISSION SPECTRUM THROUGH 5 CM H2O
3.68	FISSION SPECTRUM THROUGH 10 CM H2O
2.35	FISSION SPECTRUM THROUGH 30 CM H2O
5.33	FISSION SPECTRUM THROUGH 50 CM H2O
4.35	FISSION SPECTRUM THROUGH 2 CM H2O AT SURFACE
5.59	FISSION SPECTRUM THROUGH 2 CM D2O
1.84	FISSION SPECTRUM THROUGH 5 CM D2O
0.76	FISSION SPECTRUM THROUGH 10 CM D2O
0.62	FISSION SPECTRUM THROUGH 30 CM D2O
0.56	FISSION SPECTRUM THROUGH 50 CM D2O
5.20	FISSION SPECTRUM THROUGH 2 CM D2O AT SURFACE
6.10	FISSION SPECTRUM THROUGH 5 CM GRAPHITE (0.25X10-1 EV WAS ASSIGNED FOR TH (THERMAL ENERGY) LOWER LEVEL)
7.33	FISSION SPECTRUM THROUGH 10 CM GRAPHITE (0.25X10-1 EV WAS ASSIGNED FOR TH (THERMAL ENERGY) LOWER LEVEL)
3.05	FISSION SPECTRUM THROUGH 20 CM GRAPHITE (0.25X10-1 EV WAS ASSIGNED FOR TH (THERMAL ENERGY) LOWER LEVEL)
1.01	FISSION SPECTRUM THROUGH 40 CM GRAPHITE (0.25X10-1 EV WAS ASSIGNED FOR TH (THERMAL ENERGY) LOWER LEVEL)
0.49	FISSION SPECTRUM THROUGH 60 CM GRAPHITE (0.25X10-1 EV WAS ASSIGNED FOR TH (THERMAL ENERGY) LOWER LEVEL)
2.49	FISSION SPECTRUM THROUGH 5 CM POLYETHYLENE (0.25X10-1 EV WAS ASSIGNED FOR TH (THERMAL ENERGY) LOWER LEVEL)
1.50	FISSION SPECTRUM THROUGH 10 CM POLYETHYLENE (0.25X10-1 EV WAS ASSIGNED FOR TH (THERMAL ENERGY) LOWER LEVEL)
1.18	FISSION SPECTRUM THROUGH 20 CM POLYETHYLENE (0.25X10-1 EV WAS ASSIGNED FOR TH (THERMAL ENERGY) LOWER LEVEL)
1.40	FISSION SPECTRUM THROUGH 40 CM POLYETHYLENE (0.25X10-1 EV WAS ASSIGNED FOR TH (THERMAL ENERGY) LOWER LEVEL)
1.80	FISSION SPECTRUM THROUGH 60 CM POLYETHYLENE (0.25X10-1 EV WAS ASSIGNED FOR TH (THERMAL ENERGY) LOWER LEVEL)
3.46	FISSION SPECTRUM THROUGH 5 CM OF 1% BORATED POLYETHYLENE (0.25X10-1 EV WAS ASSIGNED FOR TH (THERMAL ENERGY) LOWER LEVEL)
3.50	FISSION SPECTRUM THROUGH 10 CM OF 1% BORATED POLYETHYLENE (0.25X10-1 EV WAS ASSIGNED FOR TH (THERMAL ENERGY) LOWER LEVEL)
5.55	FISSION SPECTRUM THROUGH 20 CM OF 1% BORATED POLYETHYLENE (0.25X10-1 EV WAS ASSIGNED FOR TH (THERMAL ENERGY) LOWER LEVEL)

Appendix J Calculated spectral correction factors (SF) for cadmium covered TLDs

SF	Spectrum Type and Shielding
4.17	FISSION SPECTRUM THROUGH 40 CM OF 1% BORATED POLYETHYLENE (0.25X10-1 EV WAS ASSIGNED FOR TH (THERMAL ENERGY) LOWER LEVEL)
4.60	FISSION SPECTRUM THROUGH 60 CM OF 1% BORATED POLYETHYLENE (0.25X10-1 EV WAS ASSIGNED FOR TH (THERMAL ENERGY) LOWER LEVEL)
6.53	FISSION SPECTRUM THROUGH 2.5 CM OF 1% BERYLLIUM (0.25X10-1 EV WAS ASSIGNED FOR TH (THERMAL ENERGY) LOWER LEVEL)
5.44	FISSION SPECTRUM THROUGH 5 CM BERYLLIUM (0.25X10-1 EV WAS ASSIGNED FOR TH (THERMAL ENERGY) LOWER LEVEL)
2.41	FISSION SPECTRUM THROUGH 10 CM BERYLLIUM (0.25X10-1 EV WAS ASSIGNED FOR TH (THERMAL ENERGY) LOWER LEVEL)
0.98	FISSION SPECTRUM THROUGH 20 CM BERYLLIUM (0.25X10-1 EV WAS ASSIGNED FOR TH (THERMAL ENERGY) LOWER LEVEL)
0.48	FISSION SPECTRUM THROUGH 30 CM BERYLLIUM (0.25X10-1 EV WAS ASSIGNED FOR TH (THERMAL ENERGY) LOWER LEVEL)
7.18	FISSION SPECTRUM THROUGH 2.5 CM ALUMINUM (0.25X10-1 EV WAS ASSIGNED FOR TH (THERMAL ENERGY) LOWER LEVEL)
6.92	FISSION SPECTRUM THROUGH 5 CM ALUMINUM (0.25X10-1 EV WAS ASSIGNED FOR TH (THERMAL ENERGY) LOWER LEVEL)
6.12	FISSION SPECTRUM THROUGH 10 CM ALUMINUM (0.25X10-1 EV WAS ASSIGNED FOR TH (THERMAL ENERGY) LOWER LEVEL)
4.32	FISSION SPECTRUM THROUGH 20 CM ALUMINUM (0.25X10-1 EV WAS ASSIGNED FOR TH (THERMAL ENERGY) LOWER LEVEL)
1.97	FISSION SPECTRUM THROUGH 40 CM ALUMINUM (0.25X10-1 EV WAS ASSIGNED FOR TH (THERMAL ENERGY) LOWER LEVEL)
3.75	FISSION SPECTRUM THROUGH 10 CM CONCRETE
2.05	FISSION SPECTRUM THROUGH 20 CM CONCRETE
1.53	FISSION SPECTRUM THROUGH 30 CM CONCRETE
1.46	FISSION SPECTRUM THROUGH 40 CM CONCRETE
1.64	FISSION SPECTRUM THROUGH 60 CM CONCRETE
5.88	FISSION SPECTRUM THROUGH 5 CM CONCRETE WITH 10% IRON (0.25X10-1 EV WAS ASSIGNED FOR TH (THERMAL ENERGY) LOWER LEVEL)
3.91	FISSION SPECTRUM THROUGH 10 CM CONCRETE WITH 10% IRON (0.25X10-1 EV WAS ASSIGNED FOR TH (THERMAL ENERGY) LOWER LEVEL)
1.85	FISSION SPECTRUM THROUGH 20 CM CONCRETE WITH 10% IRON (0.25X10-1 EV WAS ASSIGNED FOR TH (THERMAL ENERGY) LOWER LEVEL)
1.11	FISSION SPECTRUM THROUGH 60 CM CONCRETE WITH 10% IRON (0.25X10-1 EV WAS ASSIGNED FOR TH (THERMAL ENERGY) LOWER LEVEL)
0.65	FISSION SPECTRUM THROUGH 100 CM CONCRETE WITH 10% IRON (0.25X10-1 EV WAS ASSIGNED FOR TH (THERMAL ENERGY) LOWER LEVEL)
5.87	FISSION SPECTRUM THROUGH 5 CM CONCRETE WITH 50% IRON (0.25X10-1 EV WAS ASSIGNED FOR TH (THERMAL ENERGY) LOWER LEVEL)
3.41	FISSION SPECTRUM THROUGH 10 CM CONCRETE WITH 50% IRON (0.25X10-1 EV WAS ASSIGNED FOR TH (THERMAL ENERGY) LOWER LEVEL)
1.30	FISSION SPECTRUM THROUGH 20 CM CONCRETE WITH 50% IRON (0.25X10-1 EV WAS ASSIGNED FOR TH (THERMAL ENERGY) LOWER LEVEL)
0.96	FISSION SPECTRUM THROUGH 60 CM CONCRETE WITH 50% IRON (0.25X10-1 EV WAS ASSIGNED FOR TH (THERMAL ENERGY) LOWER LEVEL)
0.86	FISSION SPECTRUM THROUGH 100 CM CONCRETE WITH 50% IRON (0.25X10-1 EV WAS ASSIGNED FOR TH (THERMAL ENERGY) LOWER LEVEL)
0.60	FISSION SPECTRUM THROUGH 100 CM OF 100% IRON (0.25X10-1 EV WAS ASSIGNED FOR TH (THERMAL ENERGY) LOWER LEVEL)
5.58	FISSION SPECTRUM THROUGH 5 CM IRON
4.47	FISSION SPECTRUM THROUGH 10 CM IRON
3.03	FISSION SPECTRUM THROUGH 20 CM IRON
2.31	FISSION SPECTRUM THROUGH 30 CM IRON
1.77	FISSION SPECTRUM THROUGH 50 CM IRON
4.99	FISSION SPECTRUM THROUGH 5 CM COPPER
3.60	FISSION SPECTRUM THROUGH 10 CM COPPER
2.13	FISSION SPECTRUM THROUGH 20 CM COPPER
1.44	FISSION SPECTRUM THROUGH 30 CM COPPER
1.07	FISSION SPECTRUM THROUGH 50 CM COPPER
6.34	FISSION SPECTRUM THROUGH 5 CM LEAD
5.65	FISSION SPECTRUM THROUGH 10 CM LEAD
4.45	FISSION SPECTRUM THROUGH 20 CM LEAD

Appendix J Calculated spectral correction factors (SF) for cadmium covered TLDs

SF	Spectrum Type and Shielding
3.56	FISSION SPECTRUM THROUGH 30 CM LEAD
2.36	FISSION SPECTRUM THROUGH 50 CM LEAD
4.68	FISSION SPECTRUM THROUGH 5 CM URANIUM-238
3.39	FISSION SPECTRUM THROUGH 10 CM URANIUM-238
2.56	FISSION SPECTRUM THROUGH 20 CM URANIUM-238
1.68	FISSION SPECTRUM THROUGH 30 CM URANIUM-238
1.32	FISSION SPECTRUM THROUGH 50 CM URANIUM-238
0.76	FISSION SPECTRUM, H2O MODERATED THROUGH 2.5 CM BERYLLIUM (0.25X10-1 EV WAS ASSIGNED FOR TH (THERMAL ENERGY) LOWER LEVEL)
1.66	FISSION SPECTRUM, H2O MODERATED THROUGH 5 CM BERYLLIUM (0.25X10-1 EV WAS ASSIGNED FOR TH (THERMAL ENERGY) LOWER LEVEL)
1.20	FISSION SPECTRUM, H2O MODERATED THROUGH 10 CM BERYLLIUM (0.25X10-1 EV WAS ASSIGNED FOR TH (THERMAL ENERGY) LOWER LEVEL)
0.59	FISSION SPECTRUM, H2O MODERATED THROUGH 20 CM BERYLLIUM (0.25X10-1 EV WAS ASSIGNED FOR TH (THERMAL ENERGY) LOWER LEVEL)
1.58	FISSION SPECTRUM, H2O MODERATED THROUGH 2.5 CM ALUMINUM (0.25X10-1 EV WAS ASSIGNED FOR TH (THERMAL ENERGY) LOWER LEVEL)
1.51	FISSION SPECTRUM, H2O MODERATED THROUGH 5 CM ALUMINUM (0.25X10-1 EV WAS ASSIGNED FOR TH (THERMAL ENERGY) LOWER LEVEL)
1.05	FISSION SPECTRUM, H20 MODERATED THROUGH 10 CM ALUMINUM (0.25X10-1 EV WAS ASSIGNED FOR TH (THERMAL ENERGY) LOWER LEVEL)
1.14	FISSION SPECTRUM, H2O MODERATED THROUGH 20 CM ALUMINUM (0.25X10-1 EV WAS ASSIGNED FOR TH (THERMAL ENERGY) LOWER LEVEL)
1.64	FISSION SPECTRUM, H2O MODERATED THROUGH 10 CM CONCRETE
1.33	FISSION SPECTRUM, H2O MODERATED THROUGH 20 CM CONCRETE
1.32	FISSION SPECTRUM, H2O MODERATED THROUGH 30 CM CONCRETE
1.72	FISSION SPECTRUM, H2O MODERATED THROUGH 40 CM CONCRETE
1.05	FISSION SPECTRUM, H2O MODERATED THROUGH 60 CM CONCRETE
1.86	FISSION SPECTRUM, H2O MODERATED THROUGH 2 CM IRON (THREE COLUMNS OF QUANTITY VALUES ARE LISTED IN THE ORIGINAL SOURCE FOR 5, 10, 20, 30 & 50 CM. THE CORRESPONDING DISTANCE, 2, 20 & 50 CM WERE DETERMINED FROM THE GRAPHICAL DATA IN THE ORIGINAL
1.84	FISSION SPECTRUM, H2O MODERATED THROUGH 20 CM IRON (THREE COLUMNS OF QUANTITY VALUES ARE LISTED IN THE ORIGINAL SOURCE FOR 5, 10, 20, 30 & 50 CM. THE CORRESPONDING DISTANCE, 2, 20 & 50 CM WERE DETERMINED FROM THE GRAPHICAL DATA IN THE ORIGIN
1.19	FISSION SPECTRUM, H2O MODERATED THROUGH 50 CM IRON (THREE COLUMNS OF QUANTITY VALUES ARE LISTED IN THE ORIGINAL SOURCE FOR 5, 10, 20, 30 & 50 CM. THE CORRESPONDING DISTANCE, 2, 20 & 50 CM WERE DETERMINED FROM THE GRAPHICAL DATA IN THE ORIGIN
2.12	FISSION SPECTRUM, H2O MODERATED THROUGH 5 CM COPPER
1.67	FISSION SPECTRUM, H2O MODERATED THROUGH 10 CM COPPER
1.48	FISSION SPECTRUM, H2O MODERATED THROUGH 20 CM COPPER
1.19	FISSION SPECTRUM, H2O MODERATED THROUGH 30 CM COPPER
0.76	FISSION SPECTRUM, H2O MODERATED THROUGH 50 CM COPPER
1.97	FISSION SPECTRUM, H2O MODERATED THROUGH 5 CM LEAD
1.63	FISSION SPECTRUM, H2O MODERATED THROUGH 10 CM LEAD
1.48	FISSION SPECTRUM, H2O MODERATED THROUGH 30 CM LEAD
1.20	FISSION SPECTRUM, H2O MODERATED THROUGH 50 CM LEAD
7.38	Cf-252 BARE
1.00	CF-252 D2O MODERATED
2.50	SHEBA: A SOLUTION CRITICAL ASSEMBLY
4.29	ABERDEEN REFERENCE SPECTRUM AT 10 FEET
4.58	SPECTRUM AT 5 FT FROM ABERDEEN REACTOR

Appendix J Calculated spectral correction factors (SF) for cadmium covered TLDs

SF	Spectrum Type and Shielding
4.30	SPECTRUM AT 10 AT ABERDEEN REACTOR
3.70	SPECTRUM AT 30 FT FROM ABERDEEN REACTOR
3.66	COMBINATION OF ABERDEEN REF SPECTRUM AND HPRR

Appendix K

Summary of Neutron Dosimeter Test with Pulsed Reactor

Appendix K Summary of Neutron Dosimeter Test with Pulsed Reactor

Card #	Chip 1	Chip 2	Chip 3	Chip 4	Ref Dose	Cd Covered Response	Bare Response	Average Response	Percent Error
900001	402	8.00	4.44	523	14.3	17.7	17.0	17.4	22
900002	392	7.74	4.05	485		17.3	15.8	16.5	16
900007	416	8.15	4.40	535		18.3	17.4	17.9	25
900015	383	8.00	4.19	471		16.9	15.3	16.1	12
900016	2460	50.5	26.7	3090	104	108	100	104	0
900017	2850	50.8	28.3	3620		126	118	122	17
900019	2860	52.0	27.4	3480		126	113	120	15
900020	2610	50.1	26.2	3110		115	101	108	4
900021	15200	231	128	17900	558	673	585	629	13
900024	15300	246	134	18700		677	608	642	15
900026	15100	246	136	18900		666	615	641	15
900028	14500	234	132	17400		639	566	603	8
900034	32800	494	278	38800	1145	1450	1260	1360	19
900036	349	6.75	3.82	442	13.2	15.4	14.4	14.9	13
900040	345	7.13	3.98	458		15.2	14.9	15.0	14
900054	354	6.93	4.05	470		15.6	15.3	15.4	17
900056	341	6.62	3.95	422		15.0	13.7	14.4	9
900067	2350	42.0	25.0	2950	95.1	104	96.1	100	5
900074	2350	45.9	26.0	3020		104	98.1	101	6
900077	2460	44.1	25.1	3140		109	102	106	11
900079	2190	43.8	23.8	2850		96.4	92.8	94.6	0
900091	13100	202	119	16200	497	580	529	554	12
900095	14000	220	130	18400		619	601	610	23
900148	12900	204	124	17000		570	554	562	13
900167	13700	224	127	17300		608	565	586	18
900173	30200	463	270	38700	1026	1340	1260	1300	26
900296	33200	496	284	40300		1470	1310	1390	36
900331	29800	494	283	36900		1320	1200	1260	23
900338	29300	473	268	34200		1300	1110	1200	17
							AVERAGE ERROR -		15

Appendix L

Summary of Beta/Gamma Dosimeter Test with Pulsed Reactor

Appendix L Summary of Beta/Gamma Dosimeter Test with Pulsed Reactor

Card #	Chip 1	Chip 2	Chip 3	Chip 4	Ref Dose	Response	Percent Error
1001	4.25	4.24	4.85	483	14.3	15.7	10
1003	4.45	4.64	5.61	533		17.4	21
1004	4.14	4.22	5.30	535		17.4	22
1006	4.53	4.61	5.30	534		17.4	22
1020	28.5	27.5	33.1	3412	104	111	7
1026	28.4	29.3	32.7	3557		116	11
1029	29.9	30.3	36.6	3516		114	10
1030	27.5	28.5	34.7	3288		107	3
1033	139	136	158	18066	558	588	5
1034	148	147	178	18916		616	10
1036	141	145	165	18636		607	9
1037	136	133	162	17716		577	3
1039	299	294	354	41002	1145	1336	17
1040	306	302	339	42741		1393	22
1041	313	310	373	42558		1387	21
1043	288	286	337	43493		1418	24
1044	4.07	4.05	5.23	487	13.2	15.9	20
1045	4.18	4.20	5.60	502		16.4	24
1046	4.15	4.27	5.06	480		15.6	18
1048	3.94	4.06	4.76	468		15.2	15
1049	25.9	25.2	31.9	2976	95.1	96.8	2
1050	26.7	27.3	32.6	3149		102	8
1051	26.0	26.2	30.9	3050		99.3	4
1053	24.6	26.1	32.5	3237		105	11
1054	126	121	145	15237	497	496	0
1057	126	126	154	17114		558	12
1066	117	122	154	14826		483	3
1074	272	268	341	41198	1026	1343	31
1075	281	270	356	41101		1340	31
1078	276	275	366	43750		1427	39
1079	274	274	329	35439		1154	13