MARTIN MARIETTA ENERGY SYSTEMS LIBRARIES

3 4456 0377012 2

ORNL-6771

ornl

OAK RIDGE NATIONAL LABORATORY

MARTIN MARIETTA

A METHODOLOGY FOR ASSESSING THE MARKET BENEFITS OF ALTERNATIVE MOTOR FUELS

Paul N. Leiby

OAK RIDGE NATIONAL LABORATORY
CENTRAL RESEARCH LIBRARY
CIRCULATION SECTION
4500N ROOM 175
LIBRARY LOAN COPY
DO NOT TRANSFER TO ANOTHER PERSON
If you wish someone else to see this report, send in name with report and the library will arrange a loan.
UCN-7969 (3 9-77)

MANAGED BY
MARTIN MARIETTA ENERGY SYSTEMS, INC.
FOR THE UNITED STATES
DEPARTMENT OF ENERGY

This report has been reproduced directly from the best available copy.

Available to DOE and DOE contractors from the Office of Scientific and Technical Information, P.O. Box 62, Oak Ridge, TN 37831; prices available from (615) 576-8401, FTS 626-8401.

Available to the public from the National Technical Information Service, U.S. Department of Commerce, 5285 Port Royal Rd., Springfield, VA 22161.

This report was prepared as an account of work sponsored by an agency of the United States Government. Neither the United States Government nor any agency thereof, nor any of their employees, makes any warranty, express or implied, or assumes any legal liability or responsibility for the accuracy, completeness, or usefulness of any information, apparatus, product, or process disclosed, or represents that its use would not infringe privately owned rights. Reference herein to any specific commercial product, process, or service by trade name, trademark, manufacturer, or otherwise, does not necessarily constitute or imply its endorsement, recommendation, or favoring by the United States Government or any agency thereof. The views and opinions of authors expressed herein do not necessarily state or reflect those of the United States Government or any agency thereof.

DOE F 1332.15
(03-93)
Combines previous version of DOE F 1332.15 and .16. All other editions are obsolete.

U. S. DEPARTMENT OF ENERGY
RECOMMENDATIONS FOR THE ANNOUNCEMENT AND DISTRIBUTION OF DEPARTMENT OF ENERGY (DOE) SCIENTIFIC AND TECHNICAL INFORMATION (STI)

(See instructions on reverse side. Use plain bond paper if additional space is needed for explanations.)

OMB Control No. 1910-1400
OMB Burden Disclosure Statement on reverse side

PART I *(DOE, DOE Contractors, Grantees, and Awardees complete)*

A. Product/Report Data

1. (Award) Contract No. DE-AC05-84OR21400

2. Title A Methodology for Assessing the Market Benefits of Alternative Motor Fuels

3. Product/Report Description

☒ a. Report *(Complete all that apply)*
(1) ☒ Print ☐ Nonprint *(specify)*
(2) ☐ Quarterly ☐ Semiannual ☐ Annual ☐ Final
☒ Topical ☐ Phase I ☐ Phase II
☐ Other *(specify)*
Dates covered _____ thru _____

☐ b. Conference/Meeting/Presentation *(Complete all that apply)*
(1) ☐ Print ☐ Nonprint *(specify)*
☐ Published proceedings
☐ Other *(specify)*
(2) Conference Title *(no abbreviations)*
Location *(city/state/country)*
Date(s) *(m/d/y)* / / thru *(m/d/y)* / /
Sponsor

☐ c. Software—Additional forms are required. Follow instructions on the back of this form.
☐ d. Other *(Provide complete description)*

B. Patent Information

Yes No
☐ ☒ Is any new equipment, process, or material disclosed? If yes, identify page numbers
☐ ☒ Has an invention disclosure been submitted? If yes, identify the disclosure number and to whom it was submitted. Disclosure number
Submitted to
☐ ☒ Are there patent-related objections to the release of this STI product? If so, state the objections.

C. Contact *(Person knowledgeable of content)*

Name
Phone
Position
Organization

PART II *(DOE/DOE Contractors complete/or as instructed by DOE contracting officer)*

A. DOE Identifiers

1. Product/Report Nos. ORNL-6771

2. Funding Office(s) *(NOTE: Essential data)* PE 01 00 00 0

B. Copies for Transmittal to AD-21 (OSTI)

(STI must be of sufficient quality for microfilming/copying.)

☐ 1. One for classified processing
☐ 2. *(number)* for standard classified distribution
☒ 3. Two unclassified for processing
☐ 4. *(number)* for program unclassified distribution
☒ 5. UC/C Category 334
☐ 6. Additional instructions/explanations

(Do not identify Sigma categories for Nuclear Weapons Data reports, and do not provide additional instructions that are inconsistent with C below.)

C. Recommendation *("X" at least one)*

☐ 1. Program/Standard Announcement/Distribution *(Available to U.S. and foreign public)*
☐ 2. Classified *(Standard Announcement only)*
☐ 3. Special Handling *(Legal basis must be noted below.)*
☐ a. Unclassified Controlled Nuclear Information (UCNI)
☐ b. Export Control/ITAR/EAR
☐ c. Temporary hold pending patent review
☐ d. Translations of copyrighted material
☐ e. Small Business Innovation Research (SBIR)
☐ f. Commercializable information
☐ (1) Proprietary
☐ (2) Protected CRADA information
Release date / /
☐ (3) Other *(explain)*
☐ 4. Program Directed Special Handling *(copy attached)*

D. Releasing Official

A. Patent Clearance *("X" one)*
☐ Has been submitted for DOE patent clearance
☒ DOE patent clearance has been granted

B. Released by
(Name) D.R. Hamrin
(Signature) D. R. Hamrin
(Phone) (615) 574-6752
(Date) September 30, 1993

ORNL-6771

334

ENERGY DIVISION

A Methodology for Assessing the Market Benefits of Alternative Motor Fuels

The Alternative Fuels Trade Model

Paul N. Leiby
Oak Ridge National Laboratory

September 1993

Prepared for the
Office of Energy Demand Policy
Office of Policy, Planning and Program Evaluation
U.S. Department of Energy

Prepared by the
OAK RIDGE NATIONAL LABORATORY
Oak Ridge, Tennessee 37831
managed by
MARTIN MARIETTA ENERGY SYSTEMS, INC.
for the
U.S. DEPARTMENT OF ENERGY
under contract DE-AC05-84OR21400

MARTIN MARIETTA ENERGY SYSTEMS LIBRARIES

3 4456 0377012 2

TABLE OF CONTENTS

LIST OF TABLES v

LIST OF FIGURES vi

ACKNOWLEDGEMENTS vii

1. INTRODUCTION 1
    1.1 Analytical Framework 1
    1.2 Issues Addressed 2
    1.3 Potential Consequences of Alternative Fuels Introduction 2
    1.4 Scenarios Considered 4
    1.5 Plan of Report 4

2. ANALYTICAL FRAMEWORK: THE AFTM MODEL 5
    2.1 General Approach of Alternative Fuels Trade Model 5
        2.1.1 Interrelated World Energy Markets for Competing Fuels 5
        2.1.2 Static Long-run Equilibrium in 2010 6
        2.1.3 Regional Detail 6
        2.1.4 Multiple Hydrocarbon Fuels 7
    2.2 Mathematical Structure of AFTM 8
        2.2.1 The Supply-Demand Balance Constraint 8
        2.2.2 The AFTM Optimization Problem Yielding a Competitive Equilibrium 9
        2.2.3 Primary Resource Supply Curves 11
        2.2.4 Conversion Activities 13
            2.2.4.1 A Compact Refinery Characterization 13
            2.2.4.2 Non-Petroleum Conversion Processes 14
        2.2.5 Transportation Activities 14
        2.2.6 Energy Product Demands by Region 15
        2.2.7 Fuel Substitution 16
        2.2.8 U.S. Transportation Service Demand and Passenger Motor Vehicle Choice 20
        2.2.9 Overall Structure of the AFTM 21

3. NUMERICAL ASSUMPTIONS ABOUT MARKETS AND PROCESSES, AND DATA SOURCES 28
    3.1 Benchmarking to 1993 AEO Base Case, Year 2010 28
    3.2 Assumptions Regarding Primary Resource Supplies 28
        3.2.1 Regional Crude Oil Supplies 28
        3.2.2 Regional Natural Gas Supplies 30
            3.2.2.2 Gas Supply From Developed Reserves in Main AFTM Regions 30
            3.2.2.3 Natural Gas Supply From Undeveloped Nonassociated Gas in Remote Foreign Regions 30
        3.2.3 Biomass Feedstock Supply for Ethanol 31
    3.3. Assumptions Regarding Selected Conversion Processes 31
        3.3.1 Ethanol Production from Corn 31
        3.3.2 Crude Oil Refining 31

3.3.3 Conversion of Electricity for Electric Vehicles 33
3.3.4 Motor Fuel Markup Processes 33
3.4 Assumptions Regarding Fuel Substitution 33
3.5 Assumptions Regarding Vehicle Cost and Choice 34

4. MARKET CONSEQUENCES OF INTRODUCING ALTERNATIVE FUELS 37
4.1 Scenarios Considered 37
4.2 Base Case Results 38
4.3 The Multifuel Scenario 42
4.4 Relationship Between Gasoline and Alternative Fuel Retail Prices 42
4.5 The Level of Each Vehicle and Motor Fuel Use 44
4.6 Net Displacement of Oil Consumption and Oil Imports 45
4.7 Net Effect on U.S. Energy Imports 48
4.8 Effect of a U.S. Oil Demand Reduction on World Oil and Gas Prices 50
4.9 Geographical Sources of Alternative Fuels 52
4.10 Measuring the Net Benefits of an Alternative Fuel Vehicles Program 52

5. SUMMARY OF MODEL CAPABILITIES AND PRELIMINARY INSIGHTS FROM MODEL EXPERIMENTS 54
5.1 Limits of These Illustrative Analyses 54
5.2 Preliminary Insights From Experiments 54
5.3 Summary of Model Capabilities 55

APPENDIX A: ESTIMATING AND USING THE MONOPOLISTIC BEHAVIORAL REPRESENTATION OF OPEC CORE 57

APPENDIX B: IMPLEMENTING THE MULTINOMIAL LOGIT THROUGH THE UTILIZATION COST FUNCTION 59

APPENDIX C: LISTING OF AFTM FUELS AND CONVERSION PROCESSES 63

APPENDIX D: LISTING OF ACRONYMS USED 67

REFERENCES 68

LIST OF TABLES

Table 2.1 AFTM Regions 8

Table 2.2 FFV and Dual Fuel Vehicle Choice Reference Values 18

Table 3.1 OPEC Reference and Maximum Supplies 30

Table 3.2 Motor Fuel Distribution and Retail Markups 33

Table 3.3 Reference Consumer Costs and Equal Price Shares for Each Vehicle Type 35

Table 4.1 Base Scenario for the Year 2010 39

Table 4.2 AFTM Fuel Flow Accounting 41

Table 4.3 Multifuel Scenario for the Year 2010 43

Table 4.4 Estimated Motor Fuel Prices for All Cases 44

Table 4.5 Transportation Services Demand Met by Motor Vehicle Type 46

Table 4.6 Shares of Substitutable Vehicle Types 47

Table 4.7 Estimated Gasoline Displacement and Alternative Fuel Use 48

Table 4.8 Factors Offsetting Gasoline Displacement in the Multifuel Scenario 49

Table 4.9 Summary of Imports, Oil Price Changes and Benefits Estimated 53

Table C.1 Fuels Included in AFTM 64

Table C.2 Conversion Processes in AFTM 65

LIST OF FIGURES

Fig. 1. Boiler Fuel Logistic Functions 16

Fig. 2. Vehicle and Fuel Choice in AFTM 22

Fig. 3. Part A of AFTM Structural Diagram 23

Fig. 4. Crude Oil Supply Curves for AFTM Regions 29

Fig. 5. Low-Cost Undeveloped, Nonassociated Gas Reserves Are Concentrated in a Few Countries 32

Fig. 6. Estimated Supply Curves for Undeveloped Nonassociated Gas 36

ACKNOWLEDGEMENTS

The author greatly appreciates the support of the Office of Energy Demand Policy, Office of Policy, Planning and Program Evaluation, U.S. Department of Energy. Benton Massell and Barry McNutt of that Office provided valuable assistance and data. Useful suggestions were offered along the way by David Greene, Alan Manne, Thomas Teisberg, Phil Tseng, Harry Vidas. Brenda Cleaves of ORNL assisted with the production of this document.

1. INTRODUCTION

This report describes a modeling methodology for examining the prospective economic benefits of displacing motor gasoline use by alternative fuels. The approach is based on the Alternative Fuels Trade Model (AFTM). AFTM development was undertaken by the U.S. Department of Energy (DOE) as part of a longer term study of alternative fuels issues. Some of the details of this longer term study have been documented in earlier reports [e.g. DOE 1988, 1989, 1990, 1991]. The AFTM is intended to assist with evaluating how alternative fuels may be promoted effectively, and what the consequences of substantial alternative fuels use might be. Such an evaluation of policies and consequences of an alternative fuels program is being undertaken by DOE as required by Section 502(b) of the Energy Policy Act of 1992.

Interest in alternative fuels is based on the prospective economic, environmental and energy security benefits from the substitution of these fuels for conventional transportation fuels. The transportation sector is heavily dependent on oil. Increased oil use implies increased petroleum imports, with much of the increase coming from OPEC countries. Conversely, displacement of gasoline has the potential to reduce U.S. petroleum imports, thereby reducing reliance on OPEC oil and possibly weakening OPEC's ability to extract monopoly profits.[1] The magnitude of U.S. petroleum import reduction, the attendant fuel price changes, and the resulting U.S. benefits, depend upon the nature of oil-gas substitution and the supply and demand behavior of other world regions. The methodology applies an integrated model of fuel market interactions to characterize these effects.

1.1 ANALYTICAL FRAMEWORK

The underlying logic of the analysis is that the energy decisions taken in the United States have to be viewed in the context of global energy markets. Petroleum is an internationally traded commodity, so changes in U.S. consumption patterns have an impact on prices, consumption, and production throughout the world. Natural gas is currently traded on a more limited basis than petroleum but our analysis is conducted on the premise that a world natural gas market is likely to emerge over the next two decades, particularly if the U.S. becomes a major importer of either LNG or methanol made from natural gas. Furthermore, natural gas and petroleum products will substitute for one another in each region, for example in boiler fuel markets or motor fuel markets (if gas-based alternative fuels are available). These market relationships are characterized in the Alternative Fuels Trade Model, which was originally developed for DOE by Alan Manne of Stanford University and was substantially revised by Paul Leiby of Oak Ridge National Laboratory.

[1]By "monopoly profit" we refer to what economists call "rent," or the extra profit that a monopolist can gain by limiting its production and maintaining a market price above the competitive level. Under free competition, price will tend toward the marginal cost of the last unit of production from each supplier.

1.2 ISSUES ADDRESSED

The report demonstrates the use of the AFTM methodology to explore the following issues:

- What is the effect of alternative fuel use on world oil and natural gas markets, including fuel prices, production, and consumption?
- What are the comparative prices at the pump of gasoline and alternative fuels?
- What are the indirect and offsetting effects of alternative fuel use, which may diminish the ability of alternative fuels to displace oil use or imports?
- What countries/regions are the likely sources of alternative fuel supply? What is the net displacement of U.S. oil and energy imports?
- What mix of vehicles (by fuel type) would likely be chosen without specific incentives? What are the effects of requirements or incentives on vehicle mix, and what are the implied consumer costs associated with changing the vehicle mix?
- What are the market economic gains and losses to the U.S. from alternative fuel use?

1.3 POTENTIAL CONSEQUENCES OF ALTERNATIVE FUELS INTRODUCTION

The motivations for alternative motor fuels are three-fold:

i. Alternative fuels <u>may</u> provide economic benefits to the U.S. by partially substituting for oil imports. Depending on alternative fuel prices, alternative vehicle efficiencies, and the resulting shifts in other fuel prices, the introduction of alternative fuels <u>could</u> satisfy transportation energy demand at lower total cost to society.

ii. Alternative fuels <u>may</u> provide environmental benefits, by reducing the automotive emissions of selected pollutants.

iii. Alternative fuels <u>may</u> provide energy security benefits, such as undermining the power and cohesion of cartelized oil suppliers, reducing the motivation for and likelihood of oil market disruptions, improving our ability to respond to disruptions, and increasing U.S. foreign policy flexibility by lessening dependence on particular fuel supply regions.

Of these factors, the AFTM methodology focuses on the first, market economic consequences. We use it to look at the effects on oil use and imports, total energy imports, and economic gains or losses.

In subsequent analyses, being undertaken for Section 502b of the Energy Policy Act of 1992, the AFTM will track emissions of greenhouse gases from fossil fuel combustion. This will be done with a simple accounting framework indicating emissions of GHGs per unit of each fuel used. While possible

benefits associated with reduced GHG emissions will not be estimated by the model, the effect of alternative fuel policy on GHG emissions and the possible role of constraints on GHG emissions may be considered. Alternative fuels may also improve local air quality in urban areas by reducing emissions of carbon monoxide, particulates, nitrogen oxides, and volatile organic hydrocarbons. However, the emissions of such non-GHG "criteria pollutants" will not be monitored by AFTM.

As a long-run equilibrium approach, the AFTM provides only partial information on potential energy security benefits. Energy security concerns may be subdivided into two parts: the long-run costs of importing energy at cartelized prices and the short-run costs of potential energy disruptions and price volatility. The AFTM can provide an estimate of long-run normal market gains, but does not address the effects of alternative fuel use on short-run oil market dynamics. It is worth noting that the energy security implications do not hinge solely on whether the motor fuels are labeled as domestic or imported. On one hand, some apparently "domestic" motor fuels may simply be recategorized or transformed versions of imported fuels. Or they may displace other domestic uses for those fuels, and lead to added imports by other sectors of the economy. On the other hand, even if the alternative fuels are imported, some energy security benefits may derive from a greater diversification of U.S. fuel sources and fuel-types. The use of alternative fuels will also affect the price responsiveness of fuel demand and supply, and the pattern of fuel trade. These effects can be estimated from a long-run market model. The long-run comparative statics approach, however, does not assess potential geo-political and dynamic energy security implications such as:

a) the increased flexibility of U.S. petroleum demand, possibly improving the country's ability to weather oil supply shocks;[2]
b) the increased (or decreased) flexibility of the U.S. crude supply and refinery system;
c) a possible reduction in the likelihood of oil supply shocks, given the reduced "tightness" of the world oil market, possible reduced cohesion of cartelized suppliers, and the greater preparedness of the U.S. to respond flexibly; and
d) the strategic and foreign policy benefits of a more diversified U.S. energy supply, both in terms of the range of resources used and the geographical variety of suppliers.

These energy security and environmental aspects of the alternative fuels program merit further scrutiny, and present substantial analytical challenges.

[2]This flexibility will depend in part on whether alternative fuel vehicles are flexibly-fueled or dedicated to a single fuel use. Taking advantage of FFV flexibility during an energy shock will require either surge production capability in the undisrupted fuel or the ability to reduce potentially more-elastic demands for the undisrupted fuel in non-transportation sectors. Demand flexibility will also increase to the extent that alternative fuels displace (comparatively inelastic) gasoline demand in favor of (highly price-responsive) heavy oil use in industrial boilers.

1.4 SCENARIOS CONSIDERED

Two illustrative scenarios are presented to indicate the capabilities of the methodology. The scenarios are a Base case and a Multifuel case. The AFTM model provides the capability to analyze many alternative motor fuels. In these illustrative scenarios, four alternative fuels are analyzed: methanol, ethanol (from grain), compressed natural gas (CNG), and electric vehicles. Subsequent work will extend this analysis to include cellulosic ethanol, liquified petroleum gases (LPG) and low-petroleum gasoline. The study's "Base case" scenario corresponds to the mid-case Annual Energy Outlook [U.S. DOE/EIA 1993] projections for 2010, with limited use of alternative motor fuels based on existing regulations and fleet requirements.

As a comparison to the base-case scenario, the study examines a "Multifuel" scenario for the year 2010. This scenario is not a forecast but is merely illustrative of one possible alternative fuel future. It is dictated in part by the availability of data. For example, both LPG and cellulosic ethanol are omitted because the analytical framework for these fuels is still being developed. In the Multifuel scenario, a mix of alternative fuel vehicles consume about 2.0 million barrels-per-day (MMBD) of fuel (details are in Section 4). This scenario might correspond to an incentive or mandate to produce a sufficient number of alternative fuel vehicles (dedicated and flexible fuel) to achieve the specified volume of gasoline displacement. The Multifuel scenario assumes that a fraction of motor vehicles are flexible fuel vehicles (FFVs), for which the fuel choice is left to the vehicle owner. Each flexible vehicle owner's choice between, for example, gasoline, ethanol (E85) and methanol (M85) depends upon fuel convenience, vehicle performance using each fuel, fuel price, and other considerations. These factors are implicitly embedded in a relation where the market share of each fuel varies with relative fuel prices, as described in Chapter 2. Thus, while the number of vehicles selected is consistent with the target level of gasoline displacement in 2010, the actual volume of gasoline displaced depends on market forces and the price advantage of alternative fuels.

1.5 PLAN OF REPORT

Chapter 2 describes the analytical framework, including the manner in which markets and processes are represented, and the approach to determining the market equilibrium. Chapter 3 is more explicit about numerical assumptions regarding supplies and processes, and notes the data sources. Chapter 4 presents a set of results from the two scenarios, based on the assumption that OPEC behaves essentially as a competitive supplier of crude oil. Chapter 5 summarizes the preliminary insights gained from the methodology.

2. ANALYTICAL FRAMEWORK: THE AFTM MODEL

2.1 GENERAL APPROACH OF ALTERNATIVE FUELS TRADE MODEL

The Alternative Fuels Trade Model (AFTM) focuses on the production and consumption of alternative motor fuels which may substitute for gasoline. The AFTM model emphasizes the interrelationships between oil and gas markets. The use of alternative fuels will displace gasoline demand, initiating a series of adjustments which ultimately may lower both U.S. oil imports and the world price of oil. These changes will ripple through the energy-economy, providing a variety of costs and benefits, only some of which are measurable in economic terms. The market interactions and the ultimate consequences for energy supply, demand, prices, and U.S. economic welfare may be partially assessed by examining the long-run market balances with an integrated model such as AFTM. This approach is often called "long-run comparative statics." It compares long-run static pictures of the energy-economy under alternative policies, without explicit consideration of the intermediate adjustment process needed to reach those long-run balances. The approach focuses on:

the prospects for fuel substitutions (which may modify the impacts of alternative fuels);
the long-run effects of alternative fuel use on oil and gas conversion activities, imports and costs; and
the ramifications of possible monopolistic responses by oil and gas exporters.

The AFTM determines prices and quantities which balance the inter-related world oil and gas markets. It characterizes the long-run market equilibrium in a selected year. The production of primary raw materials (crude oils and natural gas) is governed by price-responsive supply curves. Processes which convert crude oil or natural gas to industrial and consumer fuels are represented. The transportation of primary fuels and final products between regions is monitored. AFTM models the final demand for each end-product fuel by downward-sloping constant-elasticity demand curves. It permits fuel substitution in motor vehicles and in industrial and utility boilers.

The AFTM model provides information on the market effects of introducing alternative transportation fuels. It estimates changes in the prices, supplies and demands of conventional fuels. It reports the levels of alternative fuel use, and tracks the geographic sources of U.S. energy supplies. The market costs and benefits of introducing these substitute fuels are also assessed, based on a standard "social surplus" analysis. Social surplus [e.g. Varian 1978:207-15, Willig 1976] measures the net U.S. economic benefits of a particular market outcome as the total benefits of fuel consumption minus the costs of domestic fuel production, fuel conversion and fuel imports. The incremental capital cost of alternative fuel vehicles is also subtracted. The entire U.S. is treated as a single AFTM region, so the distribution of costs and benefits within U.S. subregions is not determined.

2.1.1 Interrelated World Energy Markets for Competing Fuels

AFTM estimates the effects of a fuel market equilibrium. Spatially disaggregated markets for competing fuels achieve an equilibrium as prices adjust, and fuels are transported to new locations and converted to forms with the highest value. This is a market-based balancing process. It results from cost minimization and profit maximization by the various economic agents (producers, transporters, refiners, distributors, etc.). Consequently, the market equilibrium may be calculated with an optimization

framework, following Samuelson [1952]. A standard modeling and optimization system, GAMS [Brooke, Kendrick and Meeraus 1988], was used to define and solve AFTM.[3] The resulting model includes both linear and non-linear components. The non-linear equations describe primary resource supplies and final fuel demands (which vary with the price of the fuel), and describe substitutions between close-substitute fuels (which vary with the price differential between the substitutes). The remainder of the model is linear, connecting the non-linear supplies and demands with linear transportation links and linear fuel conversion processes (such as crude oil refining). In keeping with the optimization approach to solution, a (non-linear) model objective is defined which embodies supply, demand and fuel substitution behavior. AFTM solves for competitive market clearing prices and quantities for all regions. This is achieved by maximizing a measure of net benefit to the world, subject to constraints on transportation, refining and conversion. Net benefit is given by the consumers' valuation of their levels of final demand, minus all the costs of fuel production, transportation and conversion.[4]

2.1.2 Static Long-Run Equilibrium in 2010

While the model is disaggregated in terms of physical commodities and geographical regions, each model run refers to a single year. Runs for the year 2010 are considered in this study. There are no explicit dynamics governing the time lags in consumers' responses to changing prices, and there are no explicit dynamics governing producers' incentives for exploration to convert undiscovered hydrocarbon resources into proven reserves. In the absence of these dynamics, the AFTM market outcomes are best viewed as long-run balances, which would occur if market conditions persist long enough (or have been changing slowly enough) for all adjustments to complete. For the gradual introduction of alternative fuels considered in this report, the use of AFTM long-run equilibria to approximate the single-year outcomes in 2010 seems reasonable.

2.1.3 Regional Detail

There are six main supply-demand regions in AFTM: USA, Canada, Japan, Western Europe, OPEC, and the Rest-of-World (ROW). The ROW excludes formerly-planned economies.[5] The AFTM main supply-demand regions are identical to those used by the U.S. Department of Energy in its International Energy Outlook [U.S. DOE/EIA 1993]. Each main supply-demand region may produce, convert, export and consume most of the principal fuels. For simplicity, detailed motor fuel conversion and consumption is represented only in the U.S. Demand for light petroleum products is more aggregated in the other main regions, but these regions may produce and ship alternative fuels or their components to the U.S.

---

[3]GAMS (the General Algebraic Modeling System) is a commercially available modeling language that eases the specification of linear and non-linear supply curves, demand curves, and conversion processes. Regions and fuels of interest are specified in tables, as are the basic model data. GAMS automates the solution of these equations. It is widely used for economic modeling, of both partial and general equilibrium problems.

[4]Maximizing this measure of net benefit is identical to maximizing the sum of producers' and consumers' surplus, i.e. the social surplus.

[5]Net oil trade with the Former Soviet Union, Eastern Europe and China is handled as an exogenous input, while natural gas, LNG and methanol trade is endogenous.

Recognizing that OPEC member countries differ in terms of their oil resource bases and possibly in their supply behavior, OPEC is subdivided into two crude supply regions: OPEC-Core and OPEC-NonCore. For the NonCore portion of OPEC, supply increases with price along a competitive supply curve. OPEC-Core behavior may be modeled through either a competitive supply curve (which increases with price) or a monopolistic supply response function. Under the monopoly assumption the OPEC Core is assumed to collectively determine its production rate, in order to maximize its joint net revenue from oil production. When making this decision, the cooperating members of OPEC are assumed to consider both the long-run effect of their production on world oil prices, and the implications of their current production for the future value of their reserves.[6]

Alternative motor fuels based on natural gas may utilize new gas resources which are currently undeveloped due to high transportation costs or insufficient demand. To investigate this possibility, AFTM includes natural gas supply from several foreign countries with a significant base of low-cost natural gas, and with low domestic demands. The remote foreign natural gas supply regions are listed in Table 2.1. They provide greater detail for important sub-regions of the six main multifuel supply-demand regions, have no explicit demand, and may only supply gas or gas-products. The remote foreign gas locations offer the greatest potential for new methanol or LNG exports.

2.1.4 Multiple Hydrocarbon Fuels

There are more than 30 distinct commodities (mostly hydrocarbon fuels) monitored in AFTM (see the Appendix for a listing). The primary resources are natural gas, light and heavy crude oil, and grain biomass feedstock for ethanol.[7] Natural gas is either converted to methanol, CNG or LNG, or consumed directly as a final product.[8] Petroleum-based products include residual fuel oil, distillate fuel oil, liquified petroleum gases (LPG), gasoline and reformulated gasoline. The total final demands by consumers who may substitute between oil and gas products are satisfied by an endogenously-determined mixture of fuels. For the purposes of the model, substitutable final demand is specified as demand for an aggregate or "composite" fuel. The three flexible composite fuels are: "Boiler fuel" (an aggregate of residual fuel oil and gas); fuel for alcohol FFVs (an aggregate of M85, E85 and Gasoline); and fuel for CNG FFV's (an aggregate of CNG and gasoline. Note that only two (average) types of crude oil are specified. The model's primary purpose is to provide an overall view of the long-term interdependence between oil and gas markets. Detailed petroleum quality attributes such as gravity, sulfur or octane are of secondary importance.

---

[6]Using the approach of von Stackelberg, the monopolist's supply depends on the elasticity of net demand for its product, and may actually move in the opposite direction to price. For the static monopolist, the profit-maximizing price implies a proportional markup over marginal cost which is inversely related to the elasticity of net demand: $(P\text{-}MC)/P = 1/\epsilon$. This is called the inverse elasticity rule, and the proportional markup is called the "Lerner index" (see, for example, Tirole 1989:66). In the monopoly version of AFTM the monopolist follows the static pricing rule, but includes a shadow cost associated with foregone future profit in the marginal cost computation. See the Appendix for further details.

[7]Cellulosic feedstock supply will be added when development is complete.

[8]Natural Gas Liquids (NGLs) are currently merged with the crude stream sent to refineries, but will be subdivided when LPG flows are more completed represented.

Table 2.1: AFTM Regions

Multifuel Supply-Demand Regions
- USA
- Canada
- Japan
- W. Europe
- OPEC
- ROW (Rest-Of-World, Market Economies)

Crude Supply-Only Sub-Regions
- OPEC Core
- OPEC NonCore

Remote Foreign Gas Supply Regions (Produce Natural Gas, LNG, or Methanol)

W. Europe:	Norway (Norwegian Arctic)
OPEC Core:	Abu Dhabi, Iran, Iraq, Kuwait, Libya, Qatar, Saudi Arabia, UAE
OPEC NonCore:	Algeria, Nigeria, Indonesia, Venezuela/Ecuador
ROW:	Argentina, Chile, Mexico, Trinidad, Canadian Arctic, China, Malaysia, Australia, New Zealand, Oman, Yemen Bangladesh, Egypt, India, Pakistan, Peru, Papua/New Guinea, Formerly USSR-West, Formerly USSR-East

Not all regions include the full set of possible hydrocarbon fuels. Specifically, only the U.S. has explicit demand for final motor fuels such as gasoline, CNG, M100 and E85. Methanol production and supply is feasible in all natural gas supply regions, but methanol demand is only modeled in the U.S. CNG and Ethanol supply and demand are only modeled in the U.S.. Gasoline and reformulated gasoline may be produced elsewhere and imported by the U.S.

2.2 MATHEMATICAL STRUCTURE OF AFTM

2.2.1 The Supply-Demand Balance Constraint

A supply-demand balance constraint accounts for all the flows and conversions in the world oil and gas markets. It ensures that sufficient supply is produced, shipped, and converted to cover demand for each fuel in each region.[9]

[9]The supply-demand balance constraint is:

$$s_{fr}^{exog} + s_{fr} + \sum_{c} A_{fc} a_{rc} + \sum_{p} (x_{fpr} - x_{frp}) \geq d_{fr} \text{ for all } f,r$$

2.2.2 The AFTM Optimization Problem Yielding a Competitive Equilibrium

The AFTM objective function is constructed so that its minimum occurs at a global equilibrium of oil and gas markets. The optimization identifies that pattern of regional supplies, shipments, conversions and demands which satisfies the above market balance constraint at minimum cost. Hence there is no (market) incentive to reallocate goods, and the balancing allocation is an equilibrium.[10]

The objective is to maximize total world net consumption benefits subject to the supply-demand balance constraint. To compute total net benefits, producers' costs, conversion costs, transportation costs and consumers' utilization costs are all subtracted from consumers' benefits.

Net Benefits = Consumption Benefits - Resource Supply Costs - Conversion Costs

- Transportation Costs - Consumer Utilization Costs[11]

---

for the AFTM variables:

s_{fr}	*supply of raw materials f in region r*
a_{rc}	*activity levels of conversion processes c in region r*
$x_{fr\rho}$	*quantities of fuel f shipped from r to ρ*
d_{rf}	*demand for end products f in region r*

and parameters

s_{fr}^{exog}	*exogenous supply of fuel f in region r*
A_{fc}	*conversion process output of fuel f per unit activity c.*

The index c refers to conversion processes; indices r and ρ refer to region names; and the index f refers to the various hydrocarbon fuels (primary inputs and final products). In words, this equation means that for each region r and fuel f, exogenous supplies plus local supply plus net conversion outputs plus net imports must equal or exceed demand.

[10]By no market incentive for reallocation, it is meant that under prevailing prices no individual firm or consumer could gain by producing or consuming a different amount. However, there may be incentives for large groups of agents, such as all U.S. petroleum consumers, to alter their choices in a way which influences the market price (through joint monopsony or monopoly power), or reduces environmental or energy security external costs. These are possible motivations for programs such as alternative motor fuels.

[11]Formally, the maximization problem is:

$$\underset{d,s,a,x}{Max} \sum_r \left\{ \sum_f \left[\int_0^{d_{fr}} D_{fr}^{-1}(q)dq - \int_0^{s_{fr}} S_{fr}^{-1}(q)dq \right] - \sum_c a_{rc}C_{rc} - \sum_f \sum_\rho x_{fr\rho}T_{fr\rho} - \sum_{f\epsilon F_s} C_f^u(\vec{d}^f) \right\}$$

$$s.t.\ \ d_{fr} - s_{fr} - s_{fr}^{exog} - \sum_c A_{fc}a_{rc} - \sum_\rho (x_{f\rho r} - x_{fr\rho}) \le 0 \quad \forall f,r$$

(and non-negativity conditions)

where:

r,ρ	index regions

The primary resource supply costs are determined from the area under the inverse-supply (marginal cost) curves, and the consumer benefits are determined from the area under the inverse-demand (marginal consumption benefit) curves. Unit conversion costs and unit transportation costs are fixed. For composite goods with substitutable inputs, "Consumers' Utilization Costs" are determined from a sharing cost function C^u which is a discrete-choice analogue of consumer surplus [Small and Rosen 1981, Leiby and Greene 1993] but depends on input shares σ^f. The inclusion of consumer utilization costs reflects the welfare effects of non-price attributes of substitutable inputs. It also assures that equilibrium shares for substitutable goods are consistent with the desired sharing function (in this case, a logit function, as described in Section 2.2.7).

At the optimum for the above problem, a competitive market equilibrium is achieved: supplies and demands balance; and prices for final goods reflect the marginal costs of input supply, conversion costs and transportation costs in expected ways.

The introduction of flexible fuel vehicles creates competition between gasoline derived from crude oil and alcohol derived from biomass or natural gas. Long-run substitution between oil and natural gas also occurs when CNG is used in vehicles. The introduction of electric vehicles also provides an opportunity for substitution.[12] This competition between ethanol, methanol, natural gas and gasoline results in altered crude oil prices and gas prices. Since demands for various energy products are highly inter-related, the changing primary energy prices create ripple effects throughout world energy markets. Thus the prices of most other energy products change, many declining with the fall in crude prices caused by the introduction of alternative fuel vehicles. There are a variety of other second-order implications of the changes in energy prices.

The objective function above accounts for the costs and benefits associated with each of these changes resulting from alternative fuels introduction. Net Cost is reported for each region and for the

f	indexes fuels and other commodities
c	indexes conversion processes
d_{fr}, s_{fr}	demand and supply levels for fuel f in region r
D_{fr}^{-1}, S_{fr}^{-1}	are inverse demand (marginal benefit) and supply (marginal cost) functions
a_{rc}	activity level for conversion process c
A_{fc}	fuel f output (input) per unit process c
C_{rc}	process c unit conversion cost, in region r
$x_{f\rho r}$	shipment of fuel f from region ρ to r
$T_{f\rho r}$	unit transport costs for fuel f from region ρ to r
F_c	is the set of composite fuels/commodities with substitutable inputs
$C_f^u(\sigma^f)$	is the consumer utilization/sharing cost for composite fuel f with input shares σ^f

[12]Other than substitution between gas and oil in boilers, the AFTM does not explicitly represent substitution in other sectors of the economy. Some substitution is implicit in the price-elasticities of demand. The focus of AFTM is on transportation fuels, and only those interactions most directly related to motor fuel use are represented.

world as a whole. The measure of net benefits to the U.S. is obtained from the U.S. contribution to the AFTM objective function, after subtracting the cost of U.S. net imports.[13]

2.2.3 Primary Resource Supply Curves

All supply curves in AFTM follow a simple functional form. This supply form implies a decreasing elasticity with price. For each region, the supply curve passes through the associated price-quantity point from the DOE AEO midcase forecast. Letting Q_s denote the quantity supplied and P_s the associated price, all other points are extrapolated with the following nonlinear marginal cost function:

$$P_s = a + \frac{b}{c - Q_s} \tag{1}$$

The model user provides three points along the supply curve for each raw material (crude oil or natural gas) and region. These points determine the supply parameters, a, b and c. Note that this form implies high elasticities at low levels of supply - and low elasticities at high levels. The parameter c imposes an upper bound upon supplies. As Q_s approaches this value, the supply price increases indefinitely. Conversely, parameter a represents the minimum price required for supply to be positive.

There are about 35 natural gas supply regions, covering virtually all significant prospective suppliers from developed and remote undeveloped resources. The supply curves followed the standard, but fairly flexible functional form given above. The supply curve parameters for each region were fitted to detailed marginal production cost figures developed by Energy and Environmental Analysis Inc. on a field-by-field basis [U.S. DOE/EEA 1993].

A supply curve was also included for grain-based ethanol feedstock materials in the U.S. The feedstock for grain-based ethanol production consists of corn, whose cost reflects the land, labor and capital involved in corn production. The oil and gas used in corn production and ethanol distillation are accounted separately in the ethanol-from-corn conversion process.[14] A simple supply curve for corn feedstock was estimated from the results of McGartland et al. [1991], who used the large agricultural model AGSIM. The corn feedstock supply curve is upward sloping in price, reflecting competing demands for corn and the competing uses for agricultural land and labor [Turhollow and Leiby 1992]. Due to the limited information currently available [Tyson 1990, Turhollow and Leiby 1992], the supply curve (marginal production cost) for non-grain feedstocks to cellulosic ethanol production is not yet represented.

---

[13]In the absence of trade restrictions, the world market equilibrium corresponds to the maximization of world consumption benefit minus production and transport costs, without regard to the net import costs of any particular region. In fact, the net import costs of one region correspond to the net export gains of another, and cancel out in the maximization of world benefit. For this reason, the AFTM appropriately treats foreign oil and gas as costing only its production and transportation cost, in determining how much foreign vs. U.S. domestic oil and gas would be produced in the competitive equilibrium. However, a net benefit measure from the U.S. perspective should account for the transfer of wealth abroad due to energy imports.

[14]Coal use is assumed for the distillation of corn, and its costs are reflected in the conversion process. Coal flows are not monitored in AFTM.

To allow for two crude types, supply curves are included for light (sweet) and heavy (sour) crude types in each major supply region. The supply curves where benchmarked to produce an aggregate crude supply equal to the reference DOE/EIA projection at the reference DOE/EIA price. The projected fraction of light and heavy crude production, and the reference light-heavy price differential for each region was determined from datasets developed by DOE for the Oil Trade Model (OTM).

For the purposes of this study, OPEC is subdivided into the central OPEC Core countries, which possess most of the excess capacity and market power, and a competitive fringe of Non-Core countries. The benefits of methanol fuels introduction are evaluated considering two possible characterizations of OPEC Core supply behavior: competitive and monopolistic. In the competitive version of AFTM, the OPEC Core supplies oil along a long-run competitive supply curve. Alternatively, OPEC Core supply approximates Stackelberg monopolistic behavior. Specifically, the countries in the Core subset of OPEC behave jointly as a price leader in the international crude oil market. This means that they coordinate production decisions among themselves, and that the total production of the group as a whole is set with full consideration of the anticipated responses of oil consumers, non-OPEC oil producers, and non-Core OPEC oil producers. Each of the latter groups are then in a similar role of responding passively to the price leadership of the Core OPEC producers.

The monopolistic price leader maximizes its profit, that is its revenue less its cost. Its revenue is the quantity it produces times the market price it receives for its oil. Because of its large size, the monopolistic price leader recognizes that its production decisions influence the market oil price. The market oil price response is given by the "net demand" function for OPEC Core oil. The crude oil net demand function facing the OPEC Core derives from the sum of all regional demand functions for oil-based products (representing the responses of consumers to price) less the crude oil supply functions of all other producers. Included in the net demand function is the potential for consumers to substitute between oil and gas in response to the OPEC core pricing decisions. Because of its size, the monopolistic price leader can influence price. The price responsiveness of AFTM net demand is discussed further in section 3.5.

The monopolistic profit maximization described above is essentially a static, long-run representation. Dynamic OPEC models are generally concerned with either the time path of (net) demand response [Pindyck 1978, 1979, Hnyilicza and Pyndyck 1976, Wirl 1985, 1990] or the depletion of finite OPEC oil resources [Hotelling 1931, Devarajan and Fisher 1981]. AFTM focuses on long run demand and supply behavior, so net demand dynamics are omitted. However, long run oil depletion considerations are introduced by including a component in the monopolistic cost function to approximate the opportunity cost of producing oil earlier rather than later (see Appendix A for details).[15] At the profit maximum, the price leader chooses its price (or equivalently, its quantity) so that its marginal revenue is equal to its full marginal cost. This monopolistic price leader solution is identical to the standard monopoly solution, except that the market demand function (of the single monopoly problem) is replaced by the net demand function (of the price leadership problem).

The monopolistic assumption requires a clear definition of the Core group within OPEC, and the estimation of its net demand function and its cost function. In the past, Saudi Arabia, Kuwait, and the United Arab Emirates have often been seen as the Core players within OPEC [e.g., Hnyilicza and

[15]In the literature on depletable resources, this opportunity cost is also known as the shadow cost or user cost.

Pindyck 1976:140, or Daly, Griffin and Steele 1982:153].[16] These countries together control over 40 percent of EIA projected OPEC capacity in 2010, and they have similar population densities, ethnic backgrounds, religion, geography, and culture. However, since only the OPEC Core countries exercise market power in our approach, it may be reasonable to expand somewhat the total amount of capacity that is assumed to be controlled by the Core. Thus, without being specific about which countries would actually participate in monopolistic pricing decisions in the year 2010, we simply assume that the Core controls about half of total OPEC production.[17]

Under the monopolistic Core assumption, the net demand for OPEC Core oil was estimated from repeated experiments with AFTM. A curve was fitted to the variation of net demand behavior versus price, and the relationship was found to be nearly linear. The marginal cost of OPEC Core production was assumed to be constant, at least over the range of supply variation induced by the alternative fuel programs. This marginal cost was benchmarked to the EIA International Energy Outlook 1993 forecast, by assuming that forecasted OPEC production is optimal at the forecasted price. Given the parameters of the linear approximation to net demand (which vary when alternative fuels are introduced), and the estimate of Core marginal production cost, profit-maximizing OPEC Core production levels may be calculated for scenarios with and without alternative fuels.[18] Optimal monopolistic production levels were substituted back into AFTM to determine the implied market balances and the net benefits to the U.S.

2.2.4 Conversion Activities

The conversion activities included in AFTM are linear process with fixed input-output coefficients. That is, each conversion process uses fixed proportions of one or more input fuels to produce one or more products. Each process also incurs a fixed cost per unit of activity. Most conversion activities are unconstrained, and may be operated at any positive level.[19] The Appendix provides a listing of AFTM conversion processes.

2.2.4.1 A Compact Refinery Characterization

A refinery submodel was estimated from experiments with the large and detailed Refinery Yield Model (ORNL-RYM, see Hadder and Leiby [1992]). The AFTM refinery submodel converts two crude types into 6 products. It has 3 levels of refinery complexity and up to 16 sub-modes of operation within

---

[16]Libya is often included in the cartel core.

[17]This approach only approximates the reality of OPEC, since we are effectively assuming that OPEC cooperation is perfect within the Core of OPEC, and nil for the rest of OPEC. The reality is of course more complex, with the extent of OPEC members' cooperation waxing and waning over time as members' individual situations change, and as the key producers within OPEC are more or less effective in obtaining the cooperation of others whose stake in the outcome may be less than their own. However, cooperation within OPEC is never perfect, nor is it ever totally absent.

[18]See the Appendix for details on the estimation of the Core net demand function, Core marginal production cost, and the manner in which optimal Core production is calculated.

[19]One exception is LNG regasification in the U.S., which is limited to constrain U.S. LNG imports (see section 2.2.5). Also, refinery activity in the OPEC region is constrained to reflect the historical product mix.

each complexity. Production of reformulated gasoline is represented, and methanol use and LPG production are tracked. Despite this effort to include realistic details, the AFTM refinery is still only a very simple extreme-point characterization of the many complicated refinery processes.

2.2.4.2 Non-Petroleum Conversion Processes

Other processes describe the physical conversion of gas to LNG, CNG and methanol. The parameters used in these conversion processes are based in part on a study by Chem Systems, Inc. [DOE 1989]. This study considered the capital costs, operating costs, and feedstock requirements of methanol and LNG facilities in some detail. While the operating parameters of such facilities were estimated to vary with plant scale and design [U.S. DOE 1989:viii], only one set of conversion input-output coefficients was used for each process in AFTM. A large-scale plant in a representative area was chosen to estimate the fuel conversion parameters.[20] However, since costs will vary substantially by plant location (with some remote foreign locations being far more expensive [U.S. DOE 1989:8]), a separate set of conversion cost parameters is used for each region.[21]

Many processes were added to explicitly track the set of alternative motor fuels. Included are processes producing methanol and ethanol-based products, processes tracking the use of residual fuel and gas in the production of electricity for vehicles, and processes for producing and blending MTBE and ETBE with gasoline. Ethanol may be produced only from grain (corn), with a process to be added later for ethanol from cellulosic biomass. Detailed processes tracking LPG from natural gas plants and representing competing demands for LPG are also under development.

2.2.5 Transportation Activities

While each AFTM region is comprised of one or more countries, for the purposes of transportation analysis each is treated as a single point. There are no intra-regional transportation costs. This practical simplification means that there are no transportation costs for trade between member countries of the large "ROW" region. However, AFTM does distinguish between "wholesale" fuel prices at U.S. ports, wellheads or plant gates and "retail" prices for final products after distribution to the consumer.[22] Thus some intro-U.S. transportation costs are accounted, while the U.S. is treated as a single demand market.

---

[20] LNG and methanol input-output and cost coefficients are based upon Chem Systems Technical Report Three, "Assessment of Costs and Benefits of Flexible and Alternative Fuel Use in the U.S. Transportation Sector", November 1989. For LNG, the study employed a 20% capital charge rate and the production cost equations shown on p. 33. For methanol, the study employed an advanced scheme technology to produce fuel-grade methanol from natural gas, at 10,000 MT/day, with a 20% fixed charge rate (Table I-15, p. 17). Chemical-grade methanol production at smaller scale (2500 MT/day) would have capital and other variable costs (excluding fuel and feedstock) of about 30%-50% higher, depending upon the region and technology. Total cost of smaller-scale chemical-grade methanol production could be about 15%-20% above large-scale fuel grade methanol production (Table I-13, p. 16).

[21] Across regions, capital and operating costs of methanol production (excluding feedstock and fuel costs) are estimated to vary by about a factor of two ($0.16/gal) [U.S. DOE 1989:16].

[22] The average costs of transportation and distribution of motor fuels (gasoline, M100, CNG, etc.) are reflected in an special markup process which adds to the cost of feedstock fuels.

Transportation links are defined between the principal expected trading partners. All feasible transportation activities, except one, have no upper limits. It is assumed that in the 2010 long-run equilibrium, sufficient tanker, pipeline and terminal capacity would be built to allow unrestricted fuel shipments, in situations where it is cost-effective. The exception is the U.S. importation of LNG. Under the standard model assumptions, U.S. LNG imports are limited to 1.1 TCF/year.[23] This constraint reflects the base assumption (for the purposes of this study[24]) that a significant expansion in U.S. LNG imports is unlikely by 2010, given the difficulties in siting LNG terminal facilities.

The only explicit gas pipeline links are between the U.S. and Canada. An implicit gas trade link exists between Western Europe and the USSR (implemented as an exogenous supply source for Western Europe). The possibility that remote undeveloped gas from the western formerly-soviet republics may be piped to Western Europe is allowed as an optional transportation link (not included in the cases presented here). Petroleum trade is possible between OPEC or ROW and the four main demand regions (U.S., Canada, Japan, and Western Europe). Petroleum can be traded either as crude oil, distillate fuel, gasoline, or residual fuel oil. OPEC, ROW and the fifteen remote foreign gas regions can export LNG to the U.S., Japan, or Western Europe. Methanol trade between the remote foreign gas regions and the U.S. is modeled. LPG trade will be represented, but is not competed for this report. Foreign ethanol production and trade is omitted.

The estimated costs of transportation are fixed on a per-unit basis. They are calculated based on the transportation mode and the shipping distance. Oil and gas trade between the U.S. and Canada is by pipeline. Petroleum product trade requires special tankers, and is two-or-more times more expensive than crude shipping. LNG and methanol transport costs are based on a detailed analysis of the capital and operating costs of the associated tankers, and reflect bunker fuel costs and the mileage between closest major port cities [U.S. DOE/Chem Systems Inc. 1989, British Petroleum 1976].

2.2.6 Energy Product Demands by Region

AFTM models the final demand for each end-product fuel by downward-sloping constant-elasticity demand curves, with the form:

---

[23]As a technical matter it was simpler to implement the U.S. LNG import constraint as a limit on U.S. regasification of LNG. This yields the same material balances as a joint constraint on the sum of all LNG shipments to the U.S.. It also implies that the benefits of access to the limited foreign LNG are gained by U.S. terminal and regasification facility owners, not LNG shippers. When imports are constrained, e.g. by a quota, the exporter's price is depressed and the importer's price is raised. It is ambiguous who receives the "rent" associated with the price difference, the exporter or the importer. The benefits calculation in AFTM assumes that the rent (amounting to about $13/BOE) is gained by U.S. LNG terminals and regasification facilities. That is, the U.S. LNG importing facilities pay the lower world price for LNG, which is regasified and ultimately resold at the higher domestic gas price. The regulation of such facilities as common carriers may cause the rent to be passed on to gas consumers. The social cost of a U.S. LNG import constraint would be much greater if the associated rent were gained by foreign parties, e.g. if the LNG terminal or regasification facility were foreign-owned.

[24]National Petroleum Council's Natural Gas Study now underway makes a similar assumption regarding prospective LNG imports.

$$Q_d = Q_{dRef}\left(\frac{P}{P_{Ref}}\right)^e \tag{2}$$

2.2.7 Fuel Substitution

For each region and end product, the user indicates a reference price-quantity pair, and also an elasticity. These three parameters are sufficient to define all other points along each demand curve.

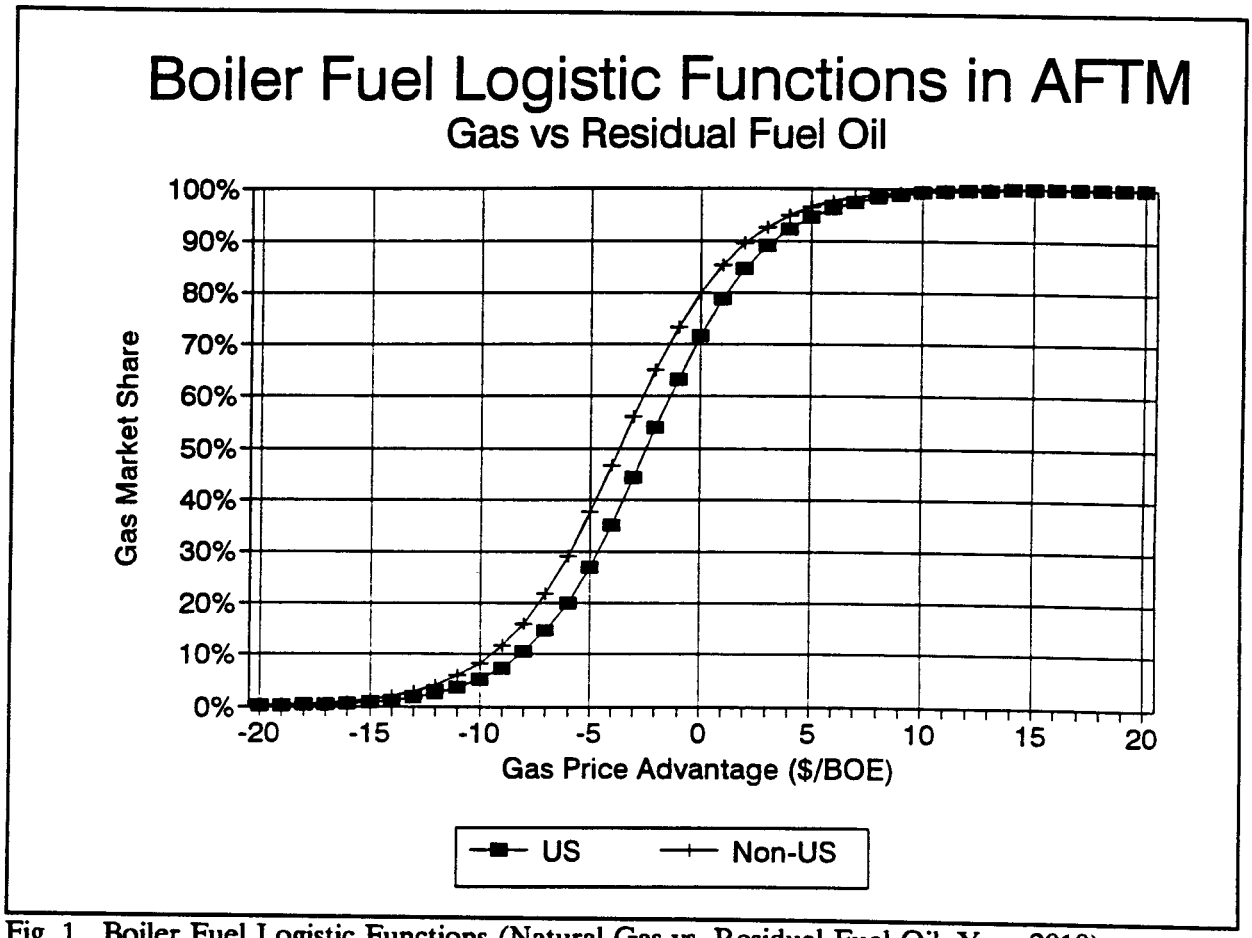

Fig. 1. Boiler Fuel Logistic Functions (Natural Gas vs. Residual Fuel Oil, Year 2010)

AFTM considers the opportunities for fuel substitution through vehicle type choice, fuel choice by flexible-fuel vehicles, and fuel choice in industrial or utility boilers. These substitutions reflect both

long-term investments and short-term fuel switching. In each substitutable market, two or more close substitute goods compete for market share. The substitutable goods are combined to satisfy demand for a composite good. The substitutable markets are:

Passenger Motor Vehicles:	Conventional Gasoline Vehicles vs. FFVs vs. AFVs.
Industrial and Utility Boilers:	Natural Gas vs. Residual Fuel Oil
Alcohol Flexible-Fuel Vehicles:	Methanol (M85) vs Ethanol (E85) vs. Gasoline
CNG Flexible-Fuel Vehicles:	Compressed Natural Gas vs Gasoline

Substitution between oil and gas in the industrial/utility boiler market establishes an important connection between the prices of petroleum products and gas-based products. The degree of switching by flexible-fuel vehicles determines the market penetration and success of alternative transportation fuels such as methanol. For substitutable-fuel markets, a logit function relates the market share of one fuel to its price advantage the others. The logit function follows the commonly used "S-shaped" curve for market penetration (shown in Figure 1), where small changes in the price advantage lead to only small changes in market shares. The logit model avoids the "penny-switching" assumption that is otherwise inherent in least-cost linear programming. Furthermore, the logistic market share is consistent with the aggregate outcome of least-cost fuel choices by numerous individuals, each facing slightly different fuel prices and valuing the fuels somewhat differently, provided the distribution of fuel prices follows a particular form [Boyd, Phillips and Regulinski 1982, McFadden 1974, Train 1986].

Boilers may substitute between natural gas and residual fuel oil, with natural gas being the preferred fuel if prices are close. Figure 1 shows the two-input (binomial) logit function used by AFTM to define the share of natural gas consumed in boiler fuel markets. According to the parameters used, when natural gas is at a significant price disadvantage (-$8/Barrel Oil Equivalent), its market share in the U.S. is about 10%, and its market share in other regions is about 15%. Gas achieves 50% market share when it is at a $2.5 price disadvantage in the U.S. and when it is at a $3.5 price disadvantage in other regions.[25]

Alcohol flexible-fuel vehicles and CNG dual-fueled vehicles may substitute between alternative fuels and gasoline, according to the relative fuel prices at the pump. The fuel choices of multiple-fuel vehicle owners depend upon fuel availability, vehicle performance, range, refueling convenience, and fuel price [Greene 1990,1993, Golob et al. 1992]. For example, methanol and ethanol fuels may be generally

[25]The boiler fuel price differentials are based on the industrial price of residual fuel oil and the delivered utility price or natural gas (about $1.4 MCF above wellhead). There is no explicit final demand for boiler fuels in non-U.S. regions, so the foreign boiler markets (and foreign opportunities for fuel substitution) are limited to the boiler fuel requirements of the refining industry.

less convenient than gasoline since they offer a shorter range, yet they have a positive impact on vehicle performance.[26] They also may be perceived by consumers as environmentally attractive. In the AFTM, the attitudes of consumers toward these non-price attributes of flexible fuels are represented in the parameters of the logistic market share function. Fuel availability is essentially a transitory concern, expected to be resolved for fuels in significant demand by the year 2010 equilibrium. Our approach is to assume that fuel availability is not a problem, but to recognize that the AFTM may over-estimate the market share of little-used fuels whose penetration are on the order of one percent.

Under current assumptions [Greene 1993], the important non-price attributes of poorer range and improved performance roughly cancel each other for alcohol fuels, with methanol coming out slightly less desirable than gasoline, and ethanol coming out slightly more desirable. This implies a great deal of switching and price sensitivity when the price of methanol or ethanol is near the price of gasoline. The fuel shares assumed for equal fuel prices are shown in Table 2.2.

Table 2.2
FFV and Dual Fuel Vehicle Choice Reference Values

Alcohol Flexible Fuel Vehicles			CNG Dual Fuel Vehicles		
Fuel Input	Equal-Price Shares	Price Elasticity of Share at 50% Share	Fuel Input	Equal-Price Shares	Price Elasticity of Share at 50% Share
Gasoline	40%	-12.5	Gasoline	85%	-5
E85	42%	-12.5	CNG	15%	-5
M85	18%	-12.5			

Refueling with CNG may require additional time and effort, and range under CNG may be reduced by about two-thirds [Greene 1993]. Accordingly, at equal prices, CNG dual-fuel vehicle owners may choose CNG as little as 15% of the time. As the price advantage of the alternative fuel over gasoline increases, an increasing proportion of consumers will accept the inconveniences of the alternative in order to save money. However, since CNG and gasoline are more dissimilar than alcohol fuels and gasoline, a lower price-elasticity of share is used for CNG dual-fueled vehicles than alcohol FFVs.

Let σ_i represent the quantity-based market share of a substitutable input i, q_i its quantity, and P_i its price (or its price advantage over some reference product, since only price differences matter). A logit function with n inputs is governed by n+1 constants α_i and β.[27] The offset parameters α_i determine the input i market share when all input prices are equal. The steepness parameter β

[26]Methanol and ethanol provide less driving range than an equal volume of gasoline, hence requires more frequent refueling, and a potentially longer search to find a refueling station. Both offer some performance advantages, with their higher octane allowing approximately 8% more power [U.S. Department of Energy 1988:19].

[27]Of the n offset parameters α_i, only n-1 are independent due to the constraint that shares must add to 1.0.

determines the slope of the logistic function with respect to price at that point. Therefore, the multinomial logit (MNL) sharing relationship is:

$$\text{for } \sigma_i = \left[\frac{q_i}{\sum_k q_k}\right]$$

$$\sigma_i = \frac{e^{\alpha_i+\beta P_i}}{\sum_k e^{\alpha_k+\beta P_k}} = \frac{1}{1+\sum_{k\neq i} e^{(\alpha_k-\alpha_i)+\beta(P_k-P_i)}} \tag{3}$$

To impose this market share relationship on the equilibrium outcome generated by the AFTM optimization approach, a sharing cost C^s is imposed. For each composite good, the sharing cost depends on the vector of all its inputs q, or rather their relative shares σ. It reflects the costs of adjusting input shares toward an unbalanced mix, or may be seen as the benefit of maintaining a diversified input mix [Anderson, DePalma and Thisse 1988]. The sharing cost function used assures that the competitive equilibrium market shares for substitutes vary with price differences in a manner that conforms to the desired (MNL) sharing function (Eq 27).[28] Furthermore, this sharing cost function has three desirable properties [Leiby and Greene 1993]:

1. At the equilibrium solution, relative input and output prices depend only on shares;
2. The equilibrium price P_a of the composite good to which the shared inputs contribute is equal to the share-weighted input prices plus the unit sharing or utilization cost $U(\sigma)$.
3. The sharing costs estimated by the model at the equilibrium are consistent with a widely used and theoretically justifiable technique for measuring the welfare effects of price and quality changes in discrete choice situations [Small and Rosen 1981]. Thus the estimated sharing costs are properly included in the assessment of total economic benefits and costs resulting from the introduction of alternative fuels.

---

[28]To define the sharing cost function, we begin by defining the unit utilization or unit sharing cost $U(\sigma)$. This is the sharing cost imposed for every unit of sharing activity (i.e. per unit composite good produced), when the input shares are σ:

$$U(\vec{\sigma}) = -\frac{1}{\beta}\sum_k ([\ln\sigma_k - 1 - \alpha_k]\sigma_k) + \gamma$$

The arbitrary integration constant γ may be used to set unit sharing cost equal to zero at its minimum. This follows the approach adopted by Manne [1990], for the binomial logit case. The multinomial logit sharing cost approach here reproduces Manne's results in the special case where n = 2. The total sharing cost function for each composite good (which is a particular solution to the representation of the multinomial logit in the optimization framework) is then:

$$C^s(\vec{q}) = U(\vec{\sigma})\sum_{k=1}^{n} q_k$$

$$C^s(\vec{q}) = \left(-\frac{1}{\beta}\sum_k ([\ln\sigma_k - 1 - \alpha_k]\sigma_k) + \gamma\right)\sum_{k=1}^{n} q_k$$

In AFTM, the composite mix of fuels resulting from a sharing function is treated like any other good. For example, the total fuel demand by flexible-fuel vehicles which can switch between alcohol fuels and gasoline is associated with a demand for the composite fuel "AlcG. The demands for the composite goods are like any other demand function in AFTM, exhibiting a constant elasticity with respect to its price. Thus the demand curve for the composite transport fuel AlcG determines the total fuel consumed by alcohol flexible-fuel vehicles, and the logit functions determine the actual mix of fuels which is chosen to meet that aggregate demand level. Accordingly, the consumer surplus calculated from a composite fuel demand curve is used to calculate the welfare effects of a change in price of the composite fuel (from a change in the average price of inputs), while the consumer utilization cost function $C^{u}(\sigma)$ is used to calculate the welfare effects of a change in the relative prices of inputs (as reflected in input shares σ).

2.2.8 U.S. Vehicle Service Demand and Passenger Motor Vehicle Choice

The AFTM is driven by final demand curves for vehicle services in various categories, rather than by final demand curves for specific motor fuels. Motor fuel demands and vehicle demands are both derived from the vehicle services demands. By vehicle services demand, we mean nothing more than the equivalent of Vehicle-Miles Traveled, which translates into vehicle demand based on the assumed miles traveled per vehicle per year, and translates into fuel demand based on the assumed efficiency (Miles Per Gallon) of each vehicle category. Vehicle services demands are differentiated by whether they occur in a reformulated gasoline region or a conventional gasoline region, since the competitiveness of AFVs depends strongly on which type of gasoline they displace.

To allow easy specification of vehicle services demand in a fashion consistent with the Annual Energy Outlook projections, the AFTM uses units comparable with the fuel demands in non-transportation sectors. Specifically, rather than stating the final demands for vehicle services in annual vehicle-miles traveled, they are stated in units of Barrels of Gasoline Equivalent (BGE) consumed in travel per day. In each scenario the reference quantity of vehicle-services demand for all vehicle types adds up to the AEO93 passenger motor fuel demand projection (8.52 MMBGE/Day). The flows of vehicle services are produced from a set of conversion processes, each of which takes in one BGE of the fuel appropriate for a particular vehicle type, adds the amortized vehicle capital charge per barrel for that vehicle type, and produces one BGE of transportation services. Differences in vehicle energy efficiency are accounted in the amount of energy for each fuel type required to produce one BGE of that fuel. The amortized vehicle charge per barrel is determined given an assumed vehicle cost, vehicle lifetime, annual miles-traveled per vehicle, and vehicle MPG.

The AFTM includes an option for making long-run passenger vehicle choice an endogenous market outcome. Vehicle services final demands may be expressed as composite demands, which are satisfied by some endogenously determined mix of vehicle-specific service flows. For example, composite demand in a reformulated gasoline region may be satisfied by any AFV or by a CV using reformulated gasoline). In this case, the mix of vehicles chosen to satisfy a composite vehicle services demand is governed by a logit equation. Alternatively, particular vehicle-type services demands may be specified directly (e.g. demand for electric vehicle services). In characterizing endogenous vehicle choice, we restrict attention to the comparatively homogeneous demands for private passenger vehicles and

passenger vehicle services (transportation). Fuel use by commercial fleets and heavy-duty vehicles are accounted in separate fuel demand curves, which are modestly price-sensitive but offer no mechanism for direct vehicle or fuel substitution.

For simplicity, passenger vehicle types are differentiated only by their fuel use capabilities, and their associated range, fuel economy, environmental and performance attributes. The consumers' discrete choices among alternative vehicle types are represented with a multinomial logit sharing function. Since this is a long run model, we abstract from questions of vehicle vintaging and scrappage rates. The time period elapsing between now and the modeled year (17 years) is long enough for the static equilibrium approach to be reasonable, provided alternative vehicle penetration is not dominant. If the AFTM scenarios suggest that alternative vehicles dominate, then omitting vintaging may be questionable.

For each scenario, the AFTM calculates the number of AFVs implied by the equilibrium levels of demand, and reports the total incremental cost of AFVs. Note that both the vehicle production costs and the sharing costs associated with vehicle choice are included in the total cost objective minimized during model solution of the market balances. Achieving a certain mix of vehicle types may require market incentives or extra-market incentives (the latter represented by constraints on the model). If a particular mix of vehicles is imposed, rather than selected as a market outcome, then the AFTM objective function will reflect any implied vehicle costs and consumer utilization/sharing costs.

In the vehicle choice analysis, a distinction is made between dedicated and multi-fueled AFVs, since the consumer may view these vehicles differently, depending on relative fuel prices. Substitution between gasoline and alternative fuels can occur both in the selection of vehicle types and in the selection of fuels by FFVs. The AFTM approach to vehicle and motor fuel use is illustrated in Figure 2, showing the nested choices of first vehicles and then the fuels for multi-fuel vehicles. The resulting derived motor fuel demands are matched against the motor fuel supplies flowing from the rest of the model. Additional numerical detail on vehicle attributes and choice behavior is provided in section 3.5.

2.2.9 Overall Structure of the AFTM

The overall structure of the AFTM is depicted in Figures 3a through 3e (a five-part diagram). The ovals label commodity flows, for each of the fuels included. The boxes at the top of the diagram depict primary resource supply, and are inscribed with supply curves. Conversion activities are depicted as rectangles, with lines entering and leaving the rectangles representing inputs and products.[29] Fuel substitution is shown as triangles, inscribed with a logistic curve. At the bottom are boxes depicting the demand for final products. This structure is replicated in each main supply-demand region, with somewhat less detail in non-U.S. regions. The transportation of fuels between regions is not represented in the diagram.

[29]The small numbers written outside each conversion rectangle indicate the process's input/output coefficients. For example, the natural gas liquefaction process LNG-S uses 1.1 BOE of natural gas to produce 1.0 BOE of LNG, after accounting for energy used by refrigeration.

Vehicle and Fuel Choice in AFTM

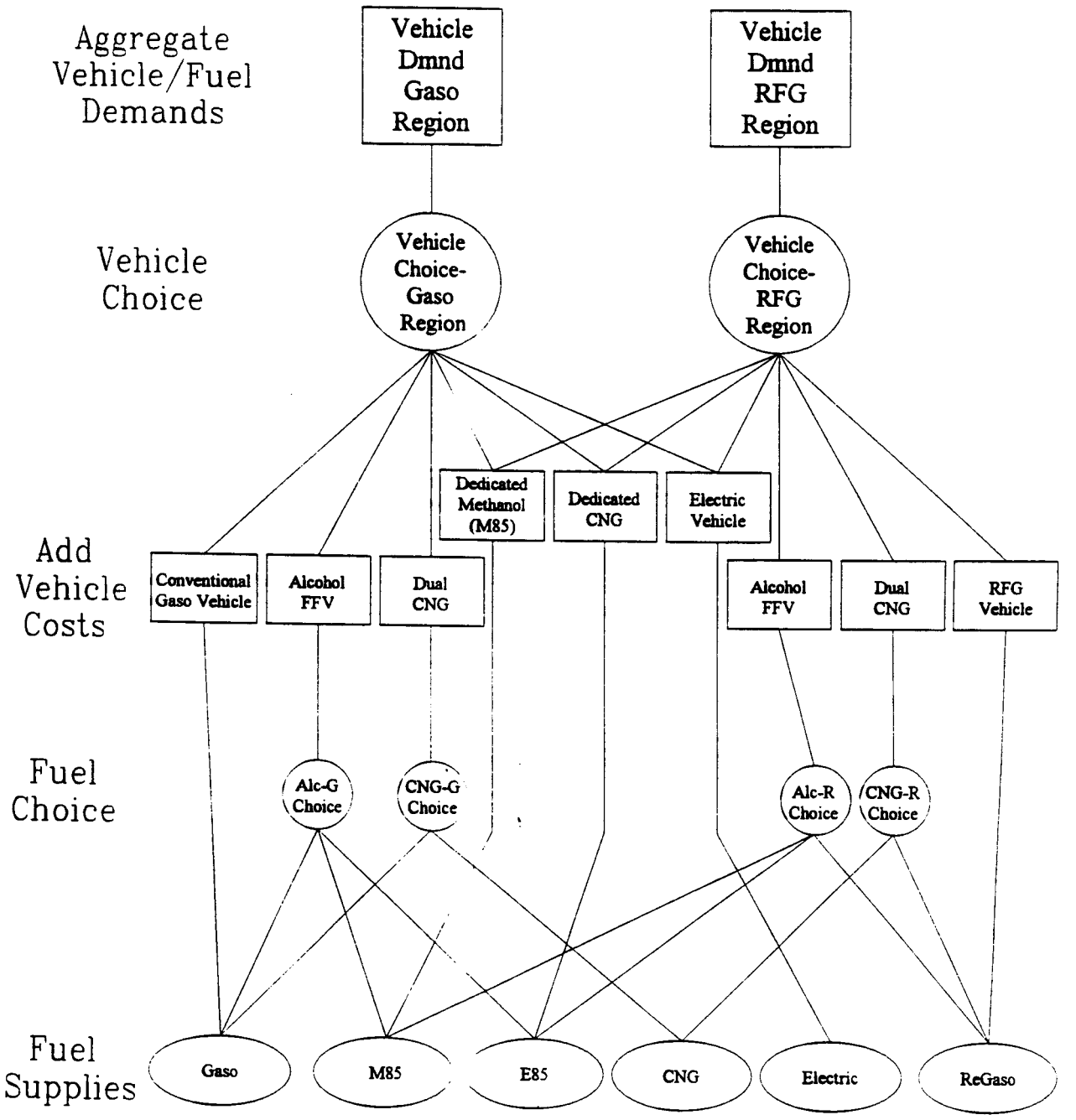

[AFTMVEHC.DRW]

Fig. 2.

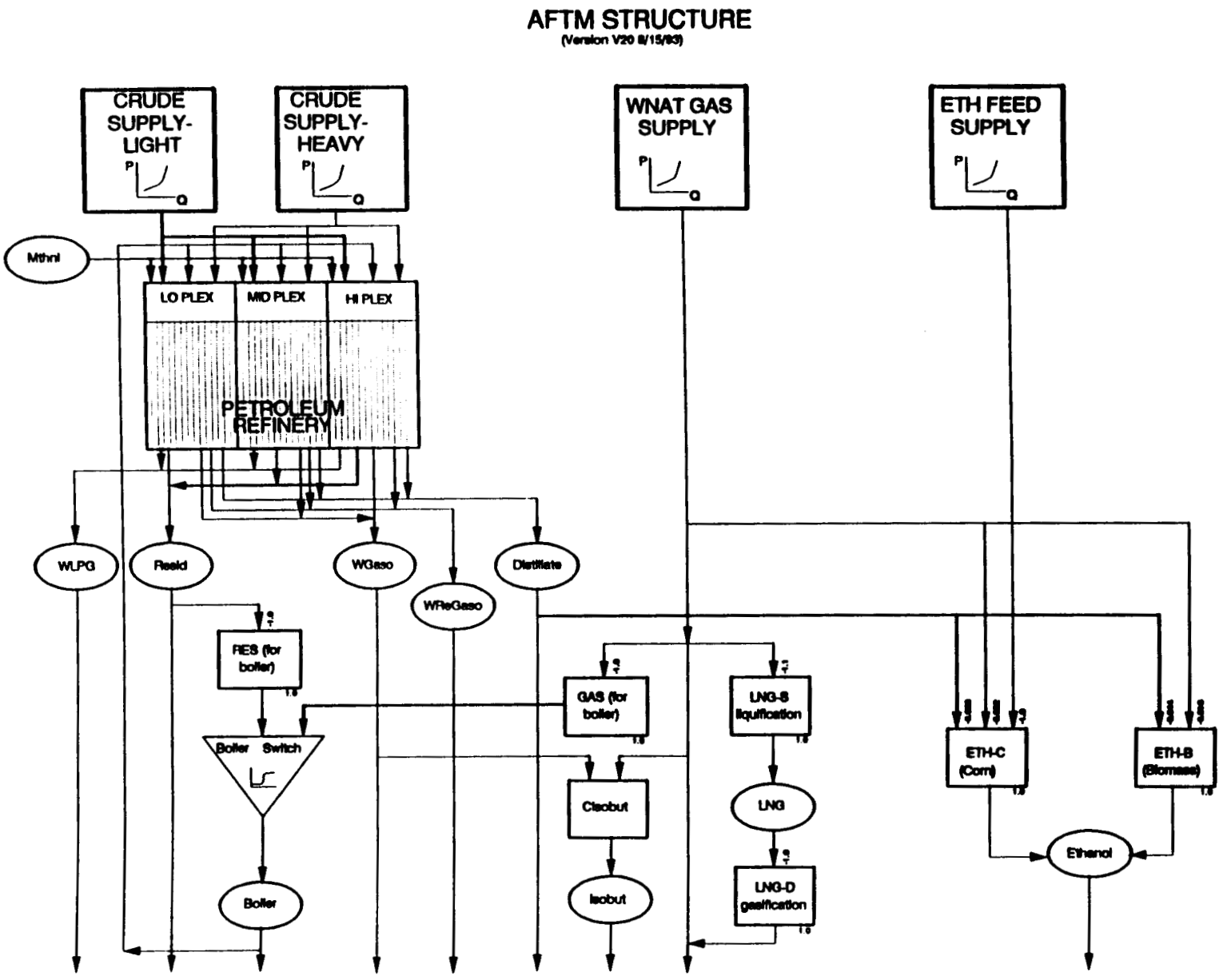

Fig. 3. Part A of AFTM Structural Diagram

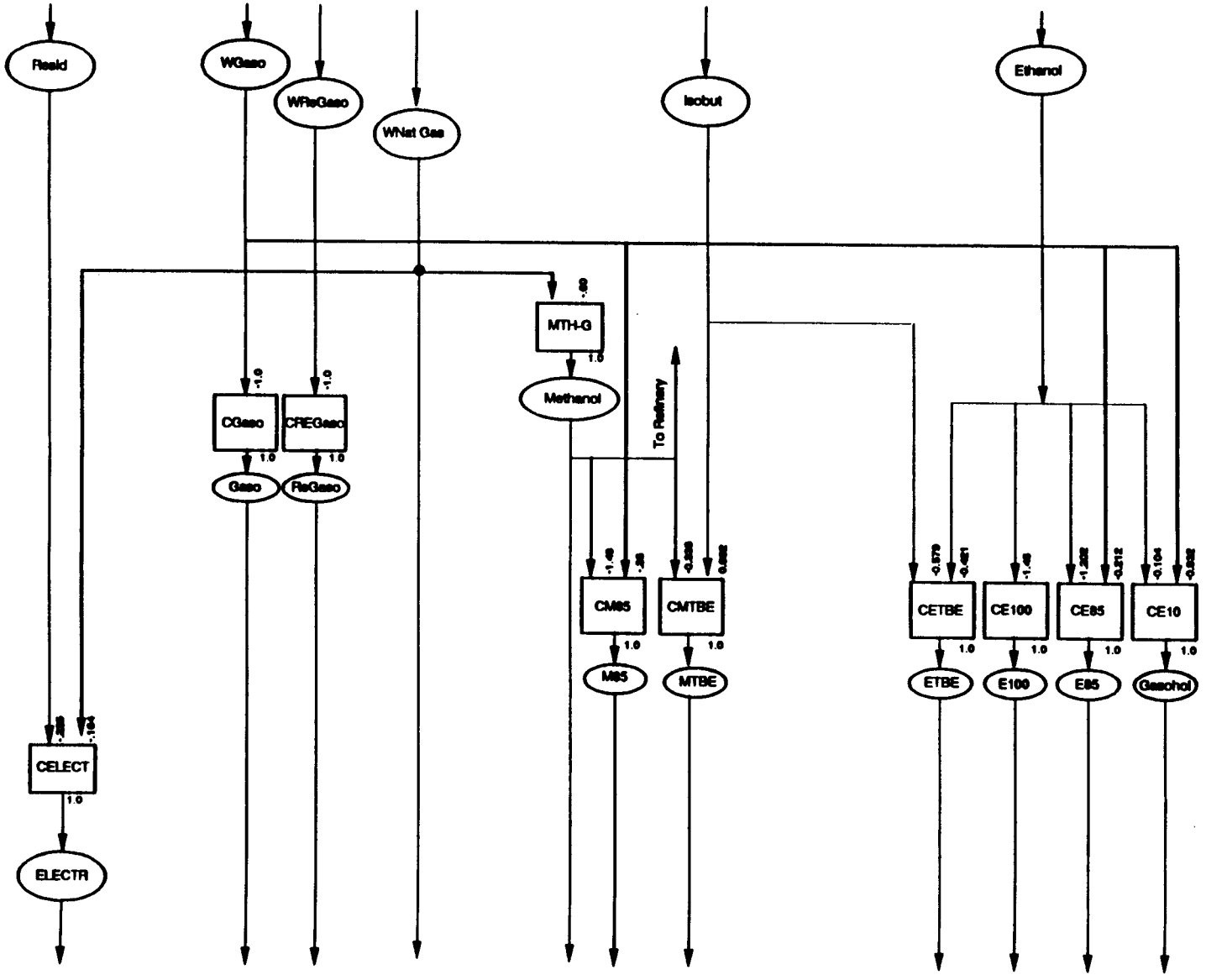

Fig. 3. Part B of AFTM Structural Diagram

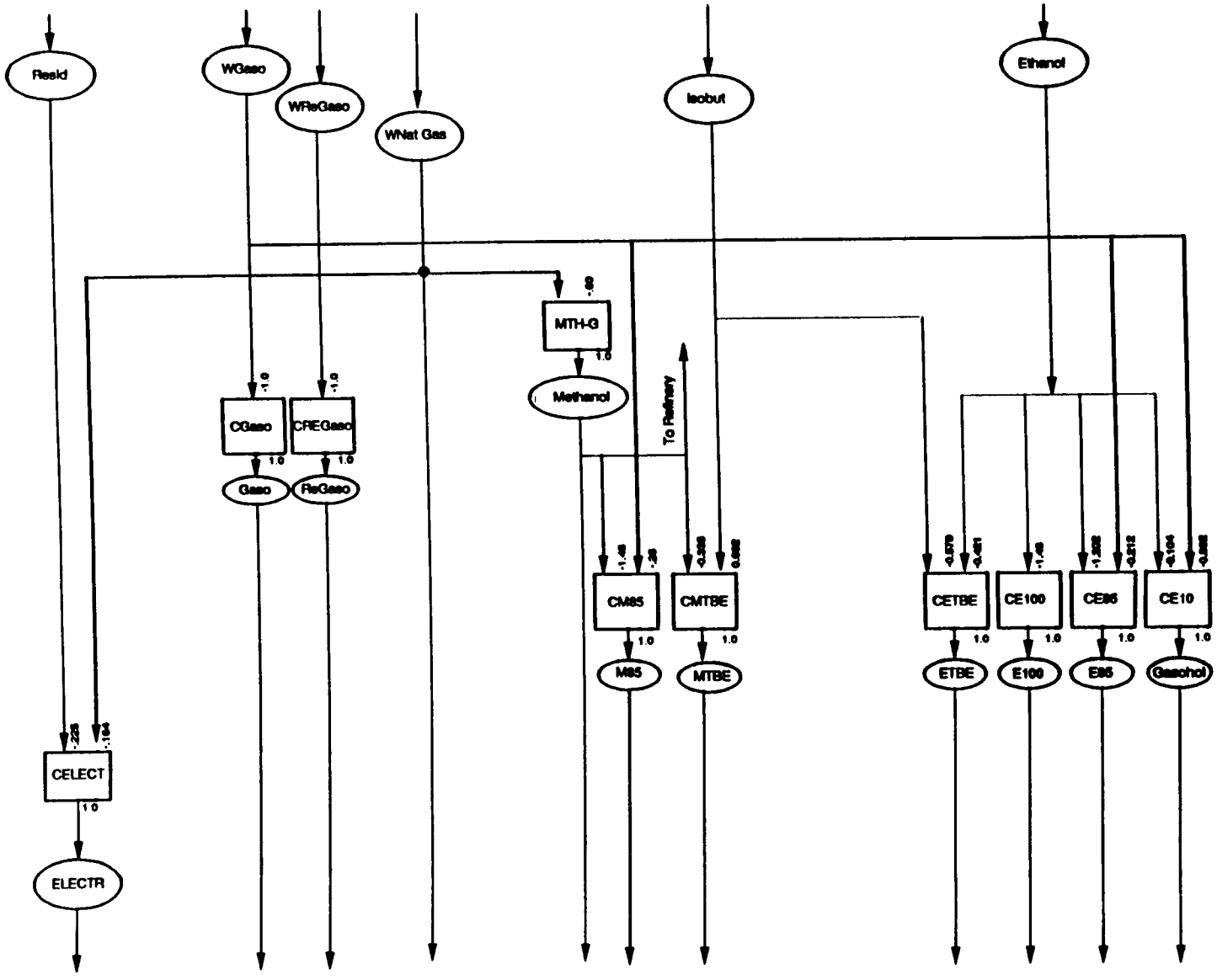

Fig. 3. Part C of AFTM Structural Diagram

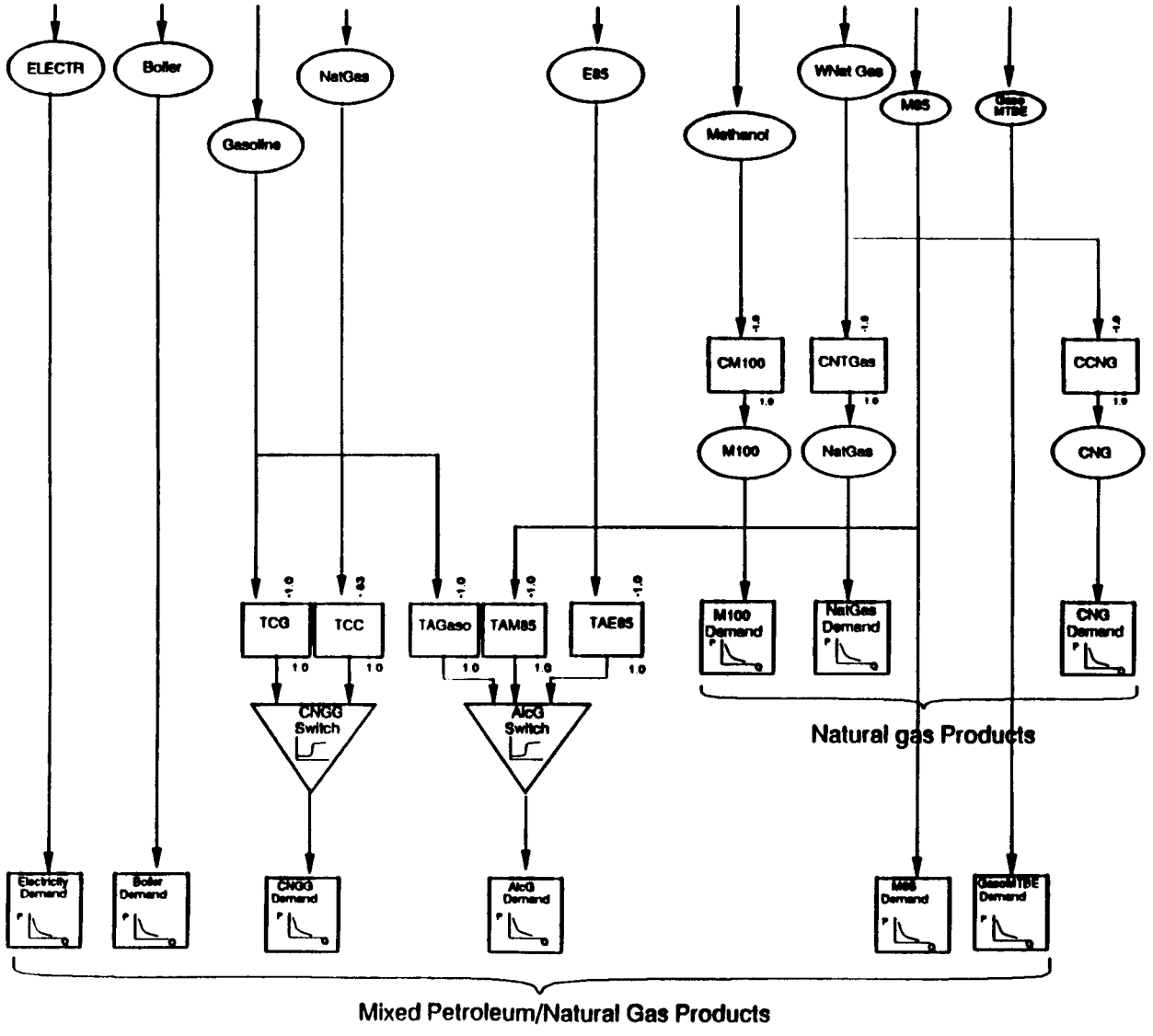

Fig. 3. Part D of AFTM Structural Diagram

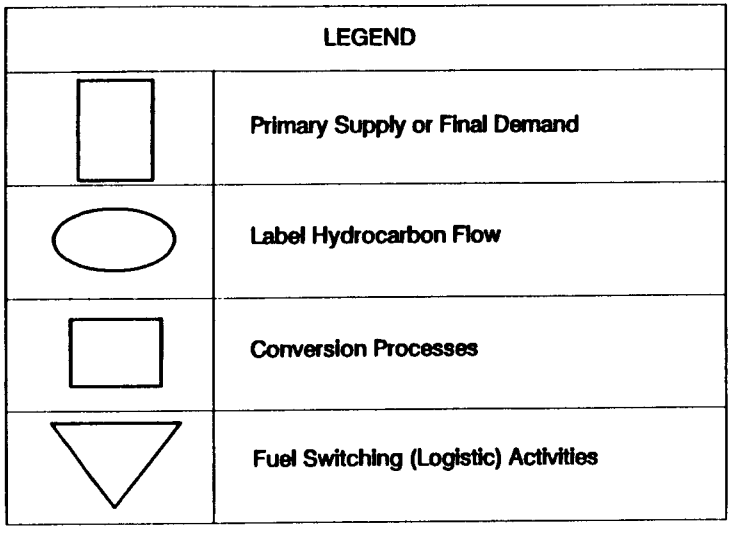

Fig. 3. Legend for the AFTM Structural Diagram

Leiby Drawings: AFTM9993A.DRW, 9/93
AFTM9993B.DRW, 9/93
AFTM9993C.DRW, 9/93
AFTM9993D.DRW, 9/93
AFTM9993E.DRW, 9/93

3. NUMERICAL ASSUMPTIONS ABOUT MARKETS AND PROCESSES, AND DATA SOURCES

3.1 BENCHMARKING TO 1993 AEO BASE CASE, YEAR 2010

The AFTM supply and demand curves are based upon the U.S. Energy Information Administration's (EIA's) 1993 Annual Energy Outlook (AEO) and 1993 International Energy Outlook, base case. Quantities are usually expressed in terms of millions of physical barrels per day (MMBD), with gas and LNG expressed in MMBDOE (million barrels daily of fuel-oil equivalent).[1] Final motor fuels are all expressed in gasoline-equivalent units (MMBDGE). Prices and costs are terms of 1990 U.S. dollars. Transport fuels are priced at the end user (retail) level, all other fuels at the plant gate or wholesale level.

3.2 ASSUMPTIONS REGARDING PRIMARY RESOURCE SUPPLIES

3.2.1 Regional Crude Oil Supplies

There are six crude oil supply regions, plus provisions for exogenous supply from non-market economies. The oil supply curves are shown in Figure 4. OPEC crude oil supply (subdivided into OPEC-Core and OPEC-Noncore supply[2]) is benchmarked with EIA's [1993] forecasts of capacity, production, and prices. The assumed upper limits on Non-core and Core supply equal EIA's maximum production capacity forecasts for the 2010. We assume that "in the base case" there is excess capacity of 10 percent for Non-core producers. The OPEC core group produces the remainder of base-case OPEC supply (see Table 3.1).

---

[1]Approximate heat contents for the definition of oil equivalents [U.S. DOE, Energy Information Administration, 1987:121,123].

Fuel:

Dry natural gas	1.03 MMBTU/1000 cubic ft
Crude oil	5.80 MMBTU/barrel
Light crude oil	5.67 MMBTU/barrel
Heavy crude oil	5.86 MMBTU/barrel
Light-prod (50-20-30 composite	5.51 MMBTU/barrel
Residual fuel oil	6.29 MMBTU/barrel
Conventional gasoline	5.25 MMBTU/barrel
Reformulated gasoline	5.10 MMBTU/barrel
Methanol (neat)	2.62 MMBTU/barrel
Ethanol	3.54 MMBTU/barrel
LPG (propane-butane mixture)	3.86 MMBTU/barrel
Isobutylene	5.25 MMBTU/barrel

For motor fuels, energy content is measured in terms of lower heating value, from the ORNL Transportation Energy Data Book, 13th Ed., Table B1.

[2]For these illustrative cases, OPEC core is comprised of countries with slightly more than half of OPEC capacity: Iran, Saudia Arabia, Kuwait, UAE, and Qatar.

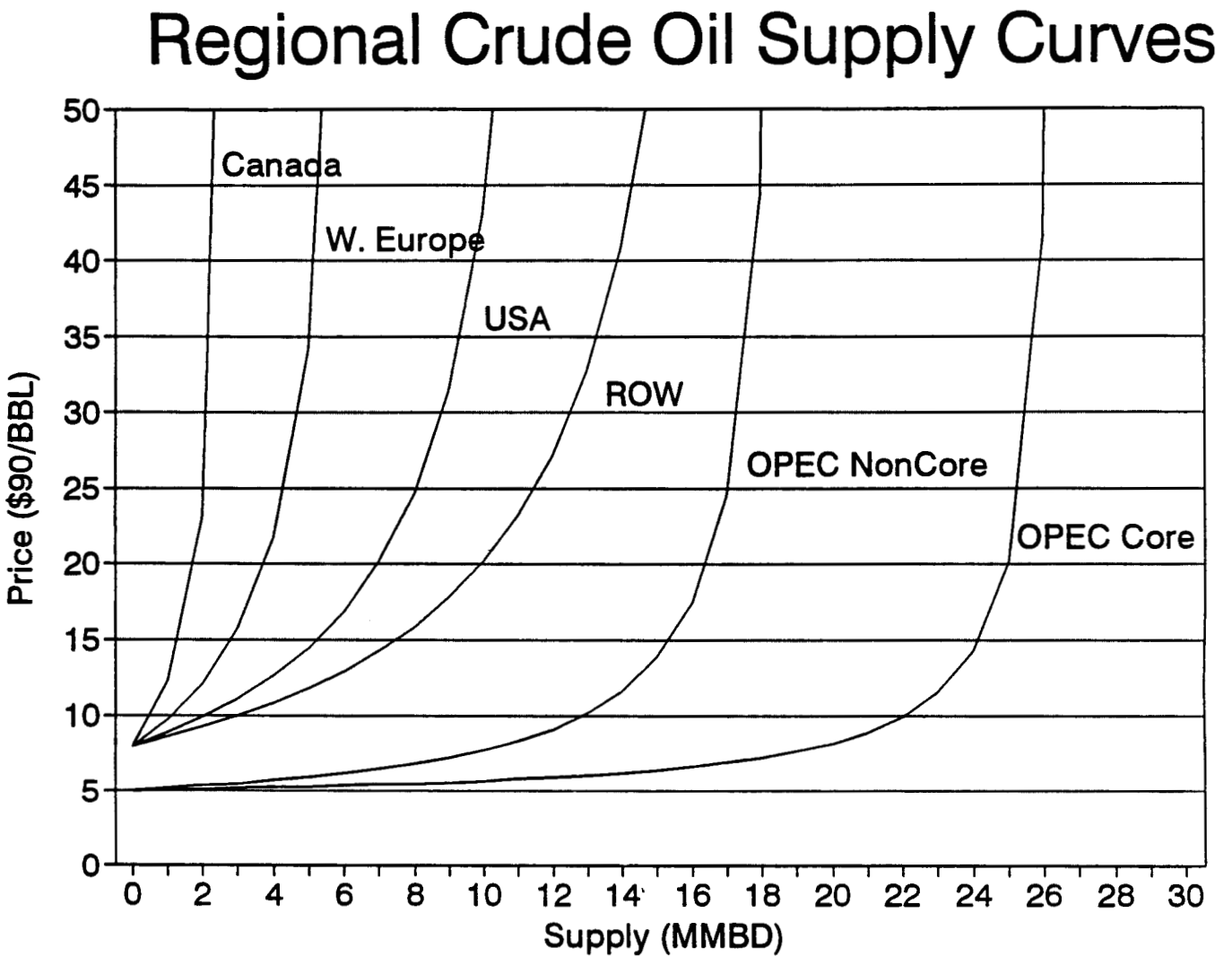

Fig. 4. Crude Oil Supply Curves for AFTM Regions

Table 3.1 OPEC Reference and Maximum Supplies		
	OPEC Non-Core	OPEC Core
Reference Production	17.2	25.5
Capacity (Max Production)	19.1	26.8
% Excess Capacity at Reference	10%	4.6%
Reference Price ($/BBL)	$26.69	$26.69

3.2.2 Regional Natural Gas Supplies

Foreign sources of natural gas may provide important supplies of feedstock for methanol or LNG. They may also affect world oil and gas markets and influence the value of other motor fuels such as CNG or LPG. The most likely source of large new quantities of gas over the next two decades is known, but yet undeveloped, foreign deposits of nonassociated gas. AFTM natural gas supply is subdivided into two categories: supply from developed gas reserves in the model's six main regions, and supply from undeveloped, non-associated gas in over 30 distinct nations.

3.2.2.2 Gas Supply From Developed Reserves in Main AFTM Regions

Gas supply curves were specified for gas from developed reserves in the 6 main supply-demand regions. Where information was available, these curves were matched to U.S. DOE projection in the Annual Energy Outlook 1993, International Energy Outlook 1993, and National Energy Strategy working documents. OPEC and ROW have upper-bounds, reflecting self-imposed cartel limits and the assumption that ROW is producing at-or-near its maximum capacity. The DOE AEO/IEO projections do not include undeveloped nonassociated gas. Thus the cumulative potential supply from countries in this category is supplemental to DOE gas supply estimates.

3.2.2.3 Natural Gas Supply From Undeveloped Non-Associated Gas in Remote Foreign Regions

Undeveloped gas fields are defined as those in which no production has taken place, nor is any scheduled to start in the next two years.[3] Undeveloped, nonassociated gas reserves constitute about 50% of total known gas reserves in the most promising countries [Haverkamp, Springer and Vidas/EEA 1991:1-3]. As Figure 5 shows, a few countries in the Middle East dominate the reserves in this class. Some of these countries may limit exports due to domestic demand, domestic instability, foreign policy considerations, or cartel designs.

[3]"Our inventory of undeveloped fields was extended to include large non-associated gas fields that have production utilizing only a small fraction of their potential capacity. Undeveloped reserves in these fields were estimated to include only those reserves that would remain after the current producing wells deplete." [Haverkamp, Springer and Vidas/EEA, 1991:2-1]

For potential important supplier nations (see the listing in Table 2.1) the volume and development costs for known nonassociated gas reserves were estimated on a field-by-field basis [Haverkamp, Springer and Vidas/EEA 1991]. Applying a standard set of investment and project assumptions, a discounted cash flow model was used to determine the net present cost of developing each major field per thousand cubic feet (Mcf). This information on field-by-field costs was used to construct country-specific price-quantity supply curves. Some of the resulting foreign supply curves for remote, undeveloped, nonassociated gas are shown in Figure 6. They indicate a substantial quantity of low-cost gas from new sources, particularly Qatar and Saudi Arabia. In some cases, where the cost of gas production is even below the value of the associated condensate liquids and natural gas plant liquids, the price is constrained by an arbitrarily imposed floor or $0.25/Mcf.

3.2.3 Biomass Feedstock Supply for Ethanol

A simple variable-elasticity supply curve for grain-ethanol feedstock materials was fit to corn supply response data, which were nearly linear in price [Leiby and Turhollow 1992]. The estimates were based on published reports and experiments with large agricultural-economic models such as the Agricultural Simulation Model and the Agricultural Resources Interregional Modelling System. The supply curves indicated a rising cost of ethanol supply from corn. The competing uses for corn, corn by-products, and farm land, all contribute to large-model results which suggest a fairly steep corn feedstock supply curve. As production of feedstock increases from 50 thousand to 1 million barrels of ethanol per day, feedstock costs (excluding the oil and gas fuels needed) rise from $0.49/gallon to $1.14/gallon. Given the limits of available modeling results, the estimation of the marginal cost of cellulosic biomass feedstock production was deferred to a later stage in the project.

3.3. ASSUMPTIONS REGARDING SELECTED CONVERSION PROCESSES

3.3.1 Ethanol Production from Corn

In addition to grain feedstock supply estimates, conversion cost estimates and input-output parameters for the grain-to-ethanol conversion processes were constructed. Unit conversion and oil/gas fuel costs add about $0.87/gallon, so the total plant gate costs of ethanol from corn supply range from $1.36/gallon to $2.01/gallon over the production rates considered (50 thousand to 1 million barrels per day). No subsidy is assumed for ethanol, since the current subsidizing legislation will have expired by year 2010. The conversion parameters track feedstock use and the consumption of oil or gas-based fuels during crop production, shipment, and conversion. For every BTU of ethanol from corn, 0.14 BTU of natural gas and 0.06 BTU of distillate oil is used. Coal is the principal energy fuel used, but it is not explicitly tracked by AFTM. Rather coal use is included as a per-unit conversion cost.

3.3.2 Crude Oil Refining

The refinery submodel is an important component of AFTM, describing the costs of producing gasoline and other petroleum products. The refinery submodel also determines the degree of flexibility with which refineries can compensate for reduced gasoline demand by increasing the supply of heavier products (such as residual or distillate fuel oil). Given its importance, a compact but moderately detailed refinery submodel was created to approximate the behavior of the large-scale

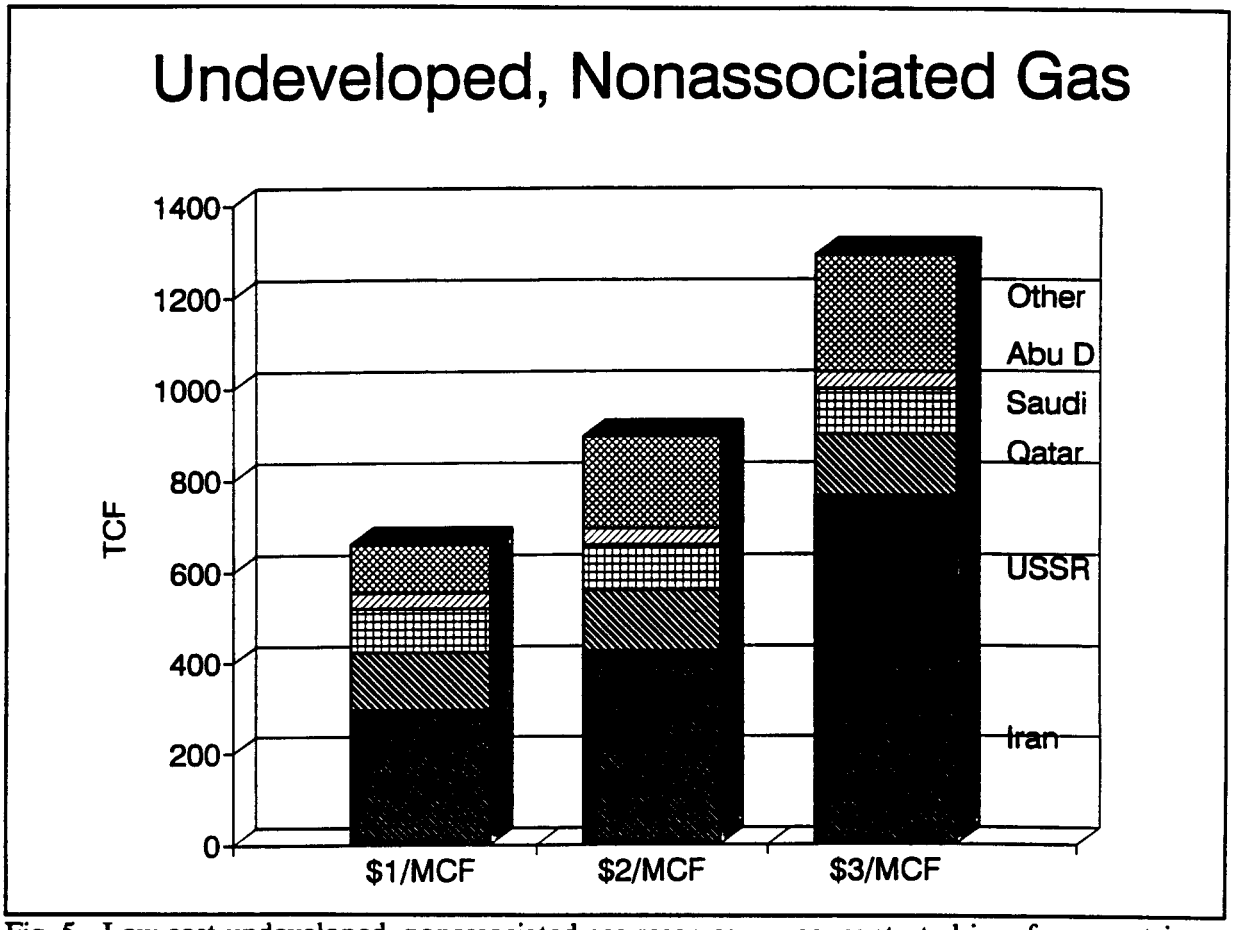

Fig. 5. Low-cost undeveloped, nonassociated gas reserves are concentrated in a few countries.

refinery process model, ORNL-RYM [Hadder and Leiby 1992]. The extreme-point method was used, whereby the large ORNL-RYM refinery model was driven to maximize the output of each product in turn, generating a series of extreme-points. The extreme point input-output combinations and costs benchmark the AFTM refinery submodel, and the feasible operating range of the refinery system is approximated by all possible convex-combinations of extreme points.

Two categories of crude oils can be processed: a composite light-sweet crude, and a composite heavy-sour crude. There are three basic refinery configurations, varying in equipment complexity. For each refinery configuration there are several modes of operation to capture some of the flexibility of refiners to adjust operations for market conditions. The modes allow maximization of a particular fuel output. The refineries produce five products: conventional gasoline, reformulated gasoline, distillate (which includes kerosene, jet fuel and distillate oil), LPG, and other products (which includes residual fuel and other refinery products).

3.3.3 Conversion of Electricity for Electric Vehicles

Only a very simple representation of electricity generation is included in AFTM. A process for electric vehicles converts gas and oil (and other fuels which are not tracked) into electricity. Based on a DOE analysis of the expected 2010 generating mix for the regions where electric vehicles are likely to be introduced [DOE/Massell memo 12/9/91], each gallon of gasoline displaced by electric vehicles typically requires 0.16 gallons of residual fuel oil and 0.23 gallons (fuel-oil-equivalent) of natural gas for generation. It is estimated that electric vehicle electricity requirements are 624 KWH per barrel gasoline-equivalent displaced [DOE/Massell memo 12/9/91]. Marginal electricity costs, excluding oil or gas fuels but including distribution, are estimated at $0.0258/KWH ($16.21/BGE).

3.3.4 Motor Fuel Markup Processes

Simple cost-markup processes represent the distribution and retail costs for each motor fuel. They also convert from physical units to barrels of gasoline equivalent (BGE). Distribution costs vary widely by motor fuel, due to their differing energy density and handling requirements. The distribution costs used are based on estimate by the Interagency Commission of Alternative Motor Fuel's First Interim Report to Congress [1990: pp. 4-13 - 4-33]. M85 distribution costs are a weighted average of gasoline and M100 costs. LPG distribution costs are a 50:50 average of M100 and E100 distribution costs. Reformulated gasoline costs include a small ($0.01/gal) markup beyond that of refinery reformulating costs, to reflect the extra costs of gasoline reformulation, which cannot easily be imposed at by the AFTM refinery submodel.

Table 3.2
Motor Fuel Distribution and Retail Markups[4]
$/Barrel Gasoline Equivalent

Gasoline	Reformulated Gasoline	M100	M85	E100	E85	Gasohol	CNG	LPG
18.48	19.90	24.36	22.83	20.71	20.24	18.48	33.94	22.54

3.4 ASSUMPTIONS REGARDING FUEL SUBSTITUTION

The AFTM input parameters specify how fuel market shares are related to their respective price differences in the boiler fuel and substitutable transport fuel markets. To benchmark the multinomial logistic functions for each substitutable market, one point (a vector of price differentials and market shares) and the slope of share with respect to price for one good are specified. For the U.S. boiler fuel market references prices for residual fuel and natural gas are taken from the AE093. It was also assumed that half of industrial section residual fuel demand and all of utility sector residual fuel demand will be substitutable over the time horizon of this analyses. Half of industrial sector natural gas use and 2.5 TCF of utility gas use were also classified as switchable. This implies a base gas market share of 81% of boiler fuel for a gas price advantage of $1.4/BFOE.

[4]Estimates are being undated for the subsequent Energy Policy Act Section 502b study.

3.5 ASSUMPTIONS REGARDING VEHICLE COST AND CHOICE

The capital costs of the alternative fuel distribution system are reflected in AFTM as added markup terms applied to plant-gate motor fuel costs. The fixed costs of the alternative fuel vehicle fleet are also included in the AFTM energy system calculations. These vehicle costs have been estimated by the Interagency Commission on Alternative Motor Fuels [ICAMF 1990] and Wang, Sperling and Olmstead [1993], based on a series of technology and fuel-specific studies. As part of this study in response to Section 502b the Energy Policy Act of 1992, the vehicle cost estimates are being refined.

In the AFTM, vehicle capital costs are determined based on the demand level for vehicle services by each AFV category. Table 3.3 below summarizes the average incremental cost per vehicle, and other vehicle attributes. The AFTM may be used to consider what policies or financial incentives, if any, may be necessary to ensure the purchase of a large AFV fleet. The consumer utility or disutility associated with the purchase of an AFV rather than a conventional vehicle depends on the vehicle type and is somewhat uncertain. However, the tradeoffs among performance, range, refueling time and convenience could imply either a modest benefit or an added cost of up to hundreds of dollars per vehicle. The consumer cost component estimates in Table 3.3 apply only to private vehicle owners using vehicles in a fairly traditional way. While these estimated vehicle shares do allot for some variation across consumers and their situations, they may not account for special circumstances justifying the purchase of electric or dedicated CNG vehicles in the eyes of a private consumer. If this is thought to be the case, then the vehicle choice function can be constrained, or a separate demand for those vehicles can be introduced outside of the vehicle choice function. The AFTM vehicle choice behavioral parameters are still under development, and a range of assumptions will be used in the planned larger study.

Table 3.3 Reference Consumer Costs and Equal Price Shares For Each Vehicle Type Based on Greene [1993]

Vehicle Type		Gasoline Conventional	Alcohol FFV	CNG Dual Fuel	LPG Dual Fuel	CNG (Ded)	Methanol (M85 Ded)	Battery Electric
Range Cost		$0	$143	$17	$262	$1,370	$351	$11,123
Refueling Convenience Cost		$0	$0	$3	$230	$230	$0	$1,193
Performance Cost		$0	($114)	$3	($47)	($341)	($209)	$0
FFV Option		$0	($46)	($2)	($6)	$0	$0	$0
Other Social Costs (e.g. "Green" value)		$0	$0	$0	$0	$0	$0	$0
Total Non-Price		$0	($17)	$21	$439	$1,259	$142	$12,316
Vehicle Cost	Higher	$0	$800	$2,500	$1,700	$2,000	$300	$6,125
	Lower	$0	$400	$1,500	$800	$1,000	$0	$5,250
Total Non-Fuel Cost	Higher	$0	$783	$2,521	$2,139	$3,259	$442	$18,441
	Lower	$0	$383	$1,521	$1,239	$2,259	$142	$17,566
Non-Fuel $/Gal*	Higher	$0.000	$0.267	$0.858	$0.728	$1.109	$0.151	$6.277
	Lower	$0.000	$0.130	$0.518	$0.422	$0.769	$0.048	$5.979
Equal Fuel Price Share**	Unfavorable	66.5%	10.2%	0.2%	***0.0%	0.0%	23.1%	0.0%
	Reference	53.9%	16.7%	1.2%	***0.0%	0.4%	27.8%	0.0%
	Favorable	46.7%	18.7%	1.2%	***0.0%	0.2%	33.2%	0.0%

Notes: * A vehicle life of 12.5 years and a discount rate of 10% are used to determine annualized vehicle capital charges. Miles traveled per vehicle-year starts at 14,000 and declines 4.5% per year with vehicle aging.
** Reference equal price shares are based on higher vehicle costs and lower elasticity of vehicle share with respect to costs (-12.5). Favorable shares based on lower vehicle costs and higher elasticity (-20). Unfavorable based on high vehicle costs and higher elasticity (-20).
*** LPG vehicles are not included in this analysis.

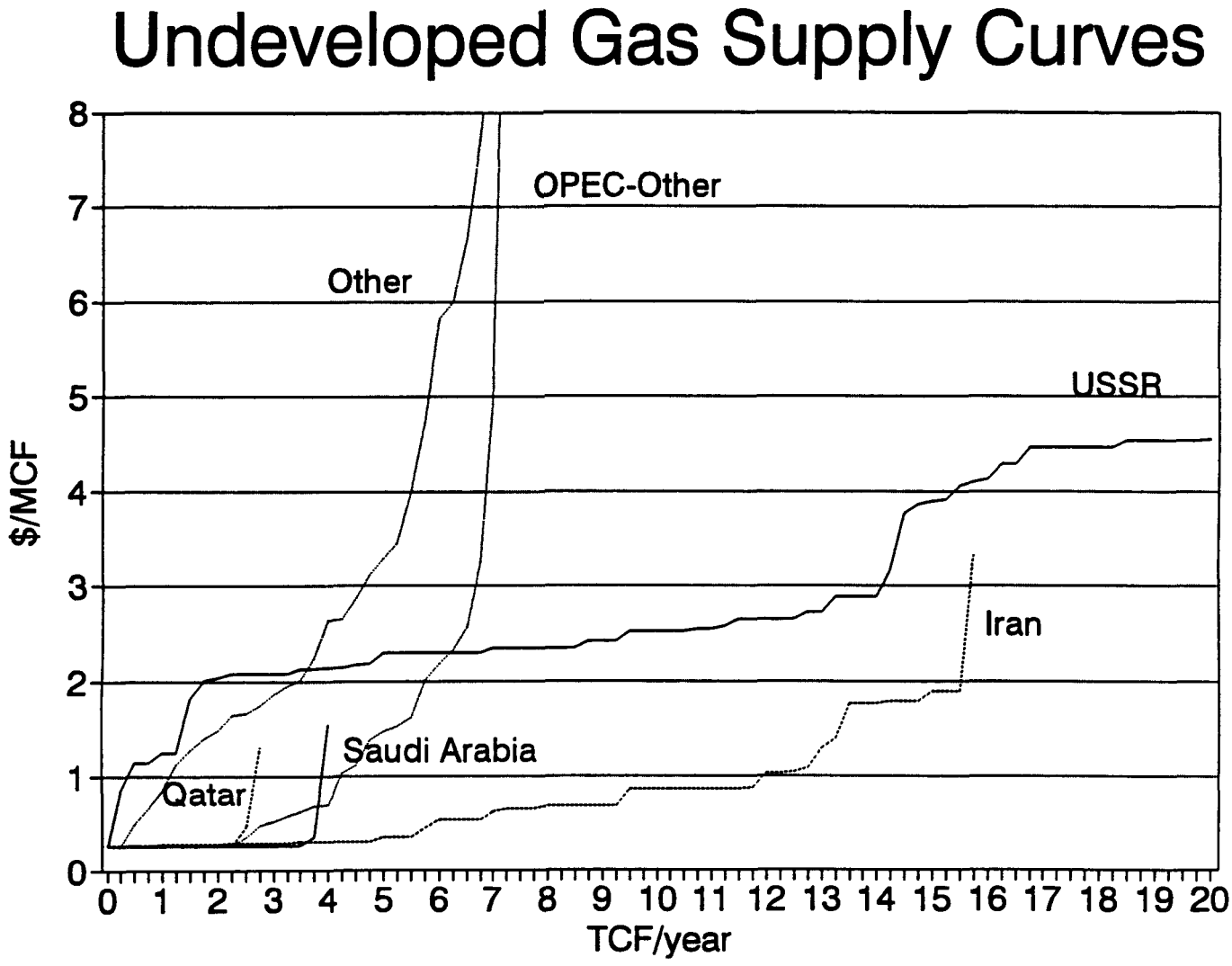

Fig. 6. Estimated Supply Curves for Undeveloped Nonassociated Gas

4. MARKET CONSEQUENCES OF INTRODUCING ALTERNATIVE MOTOR FUELS

This chapter illustrates the types of results and insights which may be gained from the AFTM. As an example it considers the introduction of an alternative-fuel vehicle fleet which displaces gasoline. No policy implications are drawn because important model components, including those relating to vehicle attributes and consumer vehicle choice, are still being finalized.

4.1 SCENARIOS CONSIDERED

Two principle scenarios are evaluated with the AFTM: Base and Multifuel. The Base scenario conforms to the U.S. Department of Energy's 1993 Midcase forecasts [U.S. DOE/EIA 1993,1993a]. The base scenario also reflects current legislation through the inclusion of mandated fleet alternative fuel demand, and the reformulation of most gasoline. The multifuel scenario envisions new demands for gasoline substitutes, accompanied by a corresponding reduction in the demand for conventional gasoline. The multifuel scenario considers the net replacement of 1.5 MMBD of gasoline with a suite of alternative fuels, as well as the oxygenation of most conventional gasoline.[1] To illustrate the AFTM methodology, we examine the multifuel case by explicitly specifying the vehicle and fuel mix used.

To allow meaningful comparison of economic welfare, all motor fuel demand scenarios in AFTM are established in the same way. The demand for particular vehicles and fuels follow from the total composite demand for all vehicle services, in either the conventional or reformulated gasoline markets. The demand curves for these two highly aggregated commodity types remain essentially fixed from scenario to scenario. The scenarios vary in terms of which vehicles and fuels are assumed to be available to satisfy the composite vehicle services demand. With a completely unconstrained choice set the AFTM will select the equilibrium mix of vehicles and fuels which are estimated to be the outcome of a purely competitive market. There are two basic mechanisms by which the model may be varied from its estimated long run competitive equilibrium: constraints (maximum and minimum) and incentives (taxes and subsidies). We will focus on the use of constraints in this methodological report.

We can limit the use of any particular economically desirable fuel or vehicle through maximum-use constraints. The model would then estimate the consequences and costs of preventing a vehicle/fuel's use for policy reasons (e.g. environmental concerns). The maximum-use constrained model might also be used to characterize the consequences and costs of failing to develop an emerging technology which could be economically self-sustaining in the long-run yet may face

[1]The Interagency Commission scenario, while originally intending to displace 2.5 MMBD of oil-based motor fuels, actually totaled only 2.28 MMBD. Of this, 0.25 was diesel fuel displacement, and 0.52 was gasoline displacement by LPG. Given the temporary absence of a final representation for LPG in the model, this leaves 1.51 MMBD of gasoline displacement.

transitional obstacles.[2] Alternatively, the use of a particular vehicle or fuel type can be ensured by imposing minimum-use constraints. These constraints allow an estimate of the market costs of regulations which promote specific fuel use. The constrained models also provide estimates of the tax or subsidy needed to achieve a particular level of vehicle/fuel use. These measures can be compared the with anticipated non-market consequences and costs of fuel use (not measured by AFTM).

While an unconstrained case has a larger choice set than a constrained scenario, and can avoid potentially high-cost mandated fleet mixes, it is not necessarily true that the U.S. benefits will be greater. The existence of externalities and non-competitive market forces may mean that the purely unconstrained (no new policy) market solution is not best for the U.S. For example, in the unconstrained market outcome alternative fuels would be more likely to replace (more expensive) reformulated gasoline than conventional gasoline. The possible environmental gains from the displacing conventional gasoline are uncertain, but certainly greater than the environmental gains from displacing reformulated gasoline. Of course, the AFTM does not include environmental consequences in its benefits measure. However, even in the context of the market benefits measured by AFTM it is possible for the U.S. to be better-off under a constrained scenario than a purely competitive one. A competitive market equilibrium maximizes total world welfare but does not necessarily maximize any individual country's welfare. The divergence between individual country and total world objectives is especially probable when consuming and producing countries are large enough to wield market power. Thus a constrained vehicle/fuel scenario which reduces U.S. oil use below normal market levels could provide greater economic benefits to the U.S. than the unconstrained market equilibrium. The merits of the U.S. undertaking such oil impact reduction policies depend in part on whether the nominal "normal market" equilibrium actually reflects monopolistic supplier behavior.

4.2 BASE CASE RESULTS

The target levels for motor fuel use in the base case scenario are given in Table 4.1. The modest levels of alternative fuel demand reflect commercial fleet programs. In the model, the base case demands for motor fuels were established by setting aggregate demands for the composite vehicle types in the conventional and reformulated regions equal to the total demand for gasoline, CNG and alcohols in the base scenarios. Within the vehicle choice functions for these composite vehicle services, the amount of each alternative vehicle type used was constrained to be exactly that quantity anticipated in the Base Case. Thus, the use of alternative vehicles was set at low levels in

[2]As a long-term equilibrium model the AFTM neither represents nor calculates the magnitude of possible transitional - impediments to alternative fuel use.

Table 4.1
Base Scenario for the Year 2010
Target Oil Displacements and Motor Fuel Use by Type[3]

Fuel Type	Fuel Used (MMBD Gasoline-Equivalent)	Oil Displaced (MMBD Gasoline-Equivalent)
Electricity	.116	0.116
CNG	.071	0.071
E85	.017	0.013
M85	.021	0.016
M100	0	0
Subtotal Alcohol (E85,M85,M100)	0.038	0.029
Subtotal, AFV Fuels	0.225	0.216
Gasohol (10% Ethanol)	0.196	0.014
Conventional Gasoline	2.956	0
Reformulated Gasoline	5.143	0
Total	8.520	0.230

the reformulated gas region (for commercial fleet use), and held to near zero in the conventional gasoline region.[4]

[3]Alternative fuel demand primarily due to fleet requirements.

[4]Electric vehicles (EVs) were accounted with separate demand curves because the vehicle choice parameters adopted implied that EV choice by private households was unlikely. This approach is consistent with the notion that special situations and EV attributes (such as their greater efficiency in congested traffic) may lead to their adoption.

The regional crude oil supplies and prices estimated by the AFTM base case match the EIA IEO93 reference values reasonably well. The equilibrium natural gas supply estimates produced by AFTM are somewhat higher than the EIA reference gas supply values, since they include production from remote foreign natural gas reserves which are currently undeveloped.[5]

Base-case petroleum product prices in the U.S. are close to the AEO93 reference levels. The base case price differential between conventional and reformulated gasoline is 5.2 cents per gallon (see Table 4.2), wholesale. When we account for the 3% lower final energy of RFG, the effective price differential rises to almost 12 cents per gallon gasoline equivalent. E85 is quite expensive ($2.39/gal) compared to gasoline ($1.38/gal), since only corn-based ethanol is represented. Electricity is substantially below conventional gasoline in price. All of the other alternative fuels (some of which are produced in only trivial amounts in the base case) are priced within 10% of conventional gasoline. For more details on the base case market outcomes, see Table 4.2. This table provides an example of the kind of fuel-flow accounting available with AFTM.

In the base case the U.S. imports 10.9 MMBD of oil, and 1.4 MMBDOE (3.3 TCF/y) of gas (from Canada). Petroleum trade between world regions is virtually unrestricted and occurs at low cost. AFTM allows unlimited exports of crude, light products, and residual fuel oil from OPEC and the ROW.[6] Petroleum transportation costs correspond to about 2.5% and 5% of the delivered price of crude oil and petroleum products, respectively. As a result, world petroleum prices (excluding taxes) are uniform across regions to within a few percent.

In contrast with the uniformity of oil markets, there is a wide variation in the prices of natural gas across regions. This is true in the base case, and indeed in all cases. The large interregional gas price differentials are attributable to both high gas transportation costs and the constrained opportunities for natural gas transportation. The only explicit links for natural gas trade are between the U.S. and Canada and between Western Europe and the former Soviet republics. Between other regions, gas must be traded in the form of either LNG or methanol. Thus the regional prices of natural gas are linked by the opportunities for conversion of gas to a more easily transported form (LNG or methanol), its transportation and its subsequent re-conversion to a final product suitable for consumption (natural gas, CNG or methanol transportation fuel, for example).

The possibility of gas conversion to methanol and subsequent methanol trade forges another link between international gas prices. This link is somewhat more complex, since the imported methanol never competes directly with domestic natural gas. It competes with either domestically manufactured methanol (from domestic gas markets) or competes with gasoline.[7] The displaced

[5]Average U.S. crude prices are about $0.20 higher than the IEO93 projection (a 1% difference). The U.S. gas price is about 12% higher than the AEO93 projection. As a consequence, the share of gas use in the U.S boiler market is 69%, somewhat lower than the reference level of 80%.

[6]Note that in addition, Canada may export crude to the U.S.. The assumption of relatively unconstrained oil trade is consistent with the long-term nature of AFTM.

[7]Naturally, this methanol link between natural gas markets is ineffective without the provision for at least some final demand for methanol-based products.

Table 4.2 AFTM Fuel Flow Accounting
Base Scenario
Year 2010 Energy Prices and Balances

	US PRICE ($/BBL)*	US SUPPLY (MMBBL/D)*				US DEMAND (MMBBL/D)*		
Fuel		Domestic	Net Imports	From Con-version	Total	By Con-version	Final	Total
Primary Fuels (Measured in Physical Barrels, Priced at Wellhead or Plant Gate)								
Wellhead Nat Gas	24.15	9.543	1.419	0.172	11.134	11.134	0	11.134
Natural Gas - City Gate	32.55	0	0	7.294	7.294	0	7.294	7.294
Crude-Light	29.04	4.064	2.037	0	6.102	6.102	0	6.102
Crude-Heavy	28.25	4.583	8.888	0	13.471	13.471	0	13.471
Wholesale Gasoline	39.54	0	0	3.103	3.103	3.103	0	3.103
Wholesale RFG	41.73	0	0	5.188	5.188	5.188	0	5.188
Distillate	37.56	0	0	6.250	6.250	0.001	6.249	6.250
Residual Fuel	29.27	0	0	5.490	5.490	1.712	3.778	5.490
Boiler Fuel	29.51	0	0	5.444	5.444	1.326	4.118	5.444
LNG	20.85	0	0.172	0	0.172	0.172	0	0.172
Methanol, Plant Gate	15.45	0	0.231	0	0.231	0.231	0	0.231
Ethanol Feedstock	20.05	0.039	0	0	0.039	0.039	0	0.039
Ethanol, Plant Gate	59.93	0	0	0.039	0.039	0.039	0	0.039
Final Motor Fuels (Measured in BGE, Retail Prices)								
Gasoline	58.02	0	0	2.912	2.912	2.912	0	2.912
Reform. Gasoline	62.92	0	0	5.032	5.032	5.032	0	5.032
CNG	54.68	0	0	0.071	0.071	0.071	0	0.071
M85	56.48	0	0	0.020	0.020	0.020	0	0.020
E85	100.66	0	0	0.016	0.016	0.016	0	0.016
Electric Vehicle	26.76	0	0	0.109	0.109	0.109	0	0.109
Gasohol	61.57	0	0	0.196	0.196	0.196	0	0.196

*Note natural gas, LNG and boiler fuel in barrels of fuel-oil equivalent (BOE), final motor fuels in barrels of gasoline-equivalent (BGE), and all other fuels in physical barrels.

gasoline influences the heavy petroleum products market, and heavy petroleum products compete with gas in boiler fuel markets.

4.3 THE MULTIFUEL SCENARIO

The Multifuel scenario [U.S. DOE 1991] was developed by the U.S. DOE to meet a target of 25% displacement of highway motor fuels by non-petroleum fuels and fuel additives by the year 2010. The Scenario is described at some length in the U.S. Alternative Fuels Commission Second Interim Report [1991]. It is summarized in Table 4.3. To most-closely achieve a particular planned mix of fuel or vehicle demands, the AFTM can be run with constrained level of use for each vehicle type in the vehicle choice function.[8] This corresponds to establishing a fleet of AFVs which is consistent with the Multifuel scenario through regulations or incentives. The constraints will alter market prices, making fuels whose use is mandated seem less expensive and fuels whose use is restricted seem more expensive. The model reports the "shadow cost" of each constraint, which indicates the subsidy or tax which would achieve the constrained level.

4.4 RELATIONSHIP BETWEEN GASOLINE AND ALTERNATIVE FUEL RETAIL PRICES

The AFTM estimates competitive market equilibrium prices for all fuels. The prices of alternative fuels relative to gasoline will depend on which fuels are being used and to what extent, given energy market interactions. This makes AFTM a useful tool which goes beyond the usual single-point estimation and comparison of fuel costs. As discussed above, in the base case, the prices of most alternative fuels are within 10% percent of the conventional gasoline price. Statistical evidence indicates that consumers are highly price sensitive when comparing among grades of gasoline or between gasoline retail outlets, so these modest price differentials could strongly influence fuel choice or vehicle choice, all other factors equal. Of course all other vehicle and fuel factors (attributes) are not equal, and the closeness of some of these prices makes it more important to account for non-price attributes. The prices of motor fuels are all reported at the retail level (see Table 4.4). Assumptions about the fuel distribution costs (i.e., the difference between plant-gate and retail costs) are very important for some fuels, such as CNG and electricity. Furthermore, the fuel prices are expressed in dollars per barrel of gasoline equivalent, so they reflect differences in the net usable energy (lower heating value) of the fuels during vehicle combustion.[9]

---

[8]In practice, the total demand curves for composite vehicle services (in both reformulated and conventional gasoline markets) were defined and the choice level of all alternative-fueled vehicles was fixed. The level of conventional vehicle use was free, although its market solution was quite close to the reference level for the Multifuel scenario.

[9]The net usable energy of E85 and M85 will depend upon its end use. If used in dedicated vehicles, a gain of 5% in efficiency is anticipated. If used in FFVs, a gain of 1% in efficiency is assumed [McNutt/DOE 1993]. The above prices do not reflect these gains.

Table 4.3
Multifuel Scenario for the Year 2010
Target Oil Displacements and Motor Fuel Use by Type[10]

Fuel Type	Totals		Change from Base Case	
	Fuel Used (MMBD Gasoline-Equivalent)	Oil Displaced (MMBD Gasoline Equivalent)	Fuel Used (MMBD Gasoline Equivalent)	Oil Displaced (MMBD Gasoline-Equivalent)
Electricity	0.433	0.433	0.317	0.317
CNG	0.362	0.362	0.291	0.291
E85	0.314	0.249	0.298	0.236
M85	0.848	0.627	0.826	0.611
M100	0.001	0.001	0.001	0.001
Subtotal Alcohol (E85,M85,M100)	1.163	0.877	1.125	0.848
Subtotal, AFV Fuels	1.959	1.672	1.733	1.456
Gasohol (10% Ethanol)	0.920	0.064	0.723	0.050
Conventional Gasoline	0.873	0	-2.083	0
Reformulated Gasoline	4.769	0	-0.374	0
Total	8.520	1.736	0	*1.506

* Note: The multifuel scenario will contain an additional 0.5 MMBD gasoline displacement by LPG, for a total displacement of 2.0 MMBD. That portion of demand was included in gasoline for this experiment, while the LPG components of the model are under development. The multifuel scenario also anticipates diesel fuel displacement, not included here.

[10]See U.S. DOE [1991], and U.S. Interagency Commission on Alternative Fuels [1991:7].

Table 4.4
Estimated Motor Fuel Prices For All Cases
(Retail, $/BGE)

Fuel	Base Scenario	Multifuel Scenario (Constrained to Target Vehicle & Fuel Mix)
Gasoline	58.02	52.12
Reformulated Gasoline	62.92	61.37
CNG	54.68	54.77
M85	56.48	56.46
E85	100.66	113.96
Electricity	26.77	26.61
Gasohol	61.57	57.33

When many fuels are introduced in the Multifuel scenario, the equilibrium adjustments tend to narrow further some of the motor-fuel price differentials. As gasoline (and oil) is displaced its price declines. In the multifuel scenario the gasoline price is sharply depressed by the fixed limits on gasoline use. The prices of ethanol and methanol-based fuels rise as demand expands. CNG prices and electricity prices are less affected.

4.5 THE LEVEL OF EACH VEHICLE AND MOTOR FUEL USE

Given the options for endogenous vehicle and fuel choice, one may examine the purely competitive outcome (which may involve few or many AFVs), explore the effects of vehicle and fuel subsidies on vehicle and fuel choice, or consider the mandating of particular vehicle fleets through regulation or some other unspecified instrument. The Multifuel scenario considered here corresponds to this last option. The mix of vehicle types and the fuel use by FFVs was imposed exogenously. The resulting pattern of fuel-use by vehicle type essentially conforms to the multifuel scenario target fuel levels (see Table 4.5). CNG is used in dedicated vehicles, a cheaper option than dual-fuel vehicles if the market is forced to use CNG. Although the price of CNG is close to that of gasoline, given the significant vehicle cost and range penalties assumed (Table 3.3), assuring its use may require large incentives. The CNG vehicle use constraint in the multifuel scenario is estimated to be equivalent to a subsidy of $0.92 per gallon gasoline equivalent. This subsidy is in the same range as the

estimated non-fuel costs of CNG vehicle use in Table 3.3. The use of electric vehicles would also require substantial incentives, but their magnitude cannot be easily estimated from AFTM, since they are treated outside the vehicle services choice function.

The E85 and M85 targets for the multifuel scenario were combined into a minimum demand level for alcohol FFVs (in conventional gasoline regions). If FFVs owners have no additional incentives, the estimated contribution of alcohols to satisfying FFV fuel demand would be limited: about 30% M85, and virtually no corn-based E85. Therefore, the use of alcohol by FFVs was constrained to the multifuel targets.

4.6 NET DISPLACEMENT OF OIL CONSUMPTION AND OIL IMPORTS

One of the most important features of the AFTM methodology is its ability to estimate the possible gap between the initial quantity of gasoline displaced and the ultimate reduction in oil imports. Alternative motor vehicles are intended to displace gasoline demand and, thereby, oil demand and oil imports. The intended demand and import reductions may be only partially attained for five reasons:

1. Gasoline and oil are indirect inputs to the production of alternative fuels (some of this was accounted for in the volumes of alternative fuels considered in the Multifuel scenario);
2. As prices of alternative motor fuels adjust up and gasoline prices adjust down, the equilibrium levels of demand for motor fuels will tend to adjust back toward the pre-displacement equilibrium;
3. If target alternative fuel demand is based on the use of FFV's, prevailing relative alternative fuel prices may be high enough to induce FFV owners to use gasoline;
4. Fuel supply, demand, and substitution responses in non-transportation sectors of the U.S. energy economy may off-set some of the oil displaced from motor vehicles; and
5. Domestic oil supply may decline if oil prices decline.

The AFTM is designed to account for all of these possibilities, at least in an approximate fashion.[11]

The multifuel scenario achieves its target of 1.5 MMBD alternative fuel use beyond the base case. However, due to offsetting responses in the U.S. oil and gas markets, the net reduction in U.S. oil imports is only about one-half of the initial displacement (0.79 MMBDGE).[12] The AFTM captures changing prices for non-motor fuels as a result of alternative fuel introduction. As refiners reconfigure to produce less light product (gasoline), and more middle and heavy products (distillate and residual fuel) the price of residual fuel oil declines by almost $0.75/BBL. Consequently, the share of residual fuel in industrial and utility boilers rises from 31% to 38%. Boiler fuels markets recapture 0.4 MMBDGE of the oil initially displaced by alternative fuels, providing the largest offset to gasoline substitution. The lesser offsets include the use of distillate fuel and residual fuel oil to

[11]Long-run non-transportation substitution possibilities between oil and gas are summarized in the boiler fuel market, and substitutions with coal, nuclear, or renewable energy in other sectors are omitted.

[12]It is important to account for the gap between alternative fuel use and oil imports reduction using energy-equivalent units. Otherwise the differences in energy value between crude oil and motor-fuels and the possible changing composition of oil imports can make physical barrel flows somewhat misleading and unlikely to balance.

Table 4.5
Transportation Services Demand Met by Motor Vehicle Type
(Corresponds to Fuel Used in MMBDGE)

Vehicle Type	Base Case	Multifuel Scenario (Constrained to Target Vehicle Mix)
CVs Using Gasoline	2.911	0.888
CVs Using Reformulated Gasoline	5.032	4.675
CVs Using Gasohol	0.196	0.926
Subtotal CV Use	8.139	6.489
CNG Dedicated Vehicles	0.071	0.362
CNG DFV in Conv. Gasoline Region	0.000	0.000
CNG DFV in Reformulated Region	0.000	0.000
M85 Dedicated Vehicle	0.021	0.021
E85 Dedicated Vehicle	0.016	0.016
Electric Vehicle	0.109	0.405
Alcohol FFVs in Conv. Gasoline Region	0.000	1.128
Alcohol FFVs in RFG Region	0.000	0.000
Subtotal AFV Use	0.217	1.932
Total	8.356	8.421

Table 4.6 Shares of Substitutable Vehicle Types

Case	Gasoline CVs	Alcohol FFVs	CNG Dual Fuel Veh.	CNG Dedicated	Electric Vehicle	M85 Ded Vehicle
Conventional Gasoline Region						
Base (Constrained) Shares	100.0%	0.0%	0.0%	0.0%	0.0%	0.0%
Multifuel (Constrained) Shares	39.6%	50.3%	0.0%	10.1%	0.0%	0.0%
Reformulated Gasoline Region						
Base (Constrained) Shares	98.2%	0.0%	0.0%	1.4%	0.0%	0.4%
Multifuel (Constrained) Shares	96.8%	0.0%	0.0%	2.8%	0.0%	0.4%

Table 4.7
Estimated Gasoline Displacement and Alternative Fuel Use
(Quantities in MMBD Gasoline Equivalent)

	Base Case	Multifuel: Change from Base
Price of Gasoline ($/BGE)	$58.02	-$5.90
Price of RFG ($/BGE)	$62.92	-$1.55
Gasoline+RFG Supply	8.14	-1.42
Gasoline Demand in CVs	7.94	-2.38
Gasoline Use in FFVs	0.00	0.00
Gasoline Use in Alternative Fuel Blends (E85, M85, Gasohol)	0.19	0.96
Total Gasoline Demand	8.14	-1.42
Total Motor Fuel Demand	8.36	0.07
Alternative Fuel Demand (incl. Gasohol and Blends)	0.41	2.44
Demand for Non-Gasoline Alternative Fuels	0.22	1.48

produce alternative fuels (ethanol and electricity), a small increase in residual fuel final demand, modest increases in transportation fuel demand due to lower gasoline prices, and small decreases in U.S. oil supply due to lower prices. Together these minor shifts in the energy system total about 0.3 MMBDGE. Table 4.8 provides a full accounting of the factors offsetting alternative fuels use in the AFTM.

4.7 NET EFFECT ON U.S. ENERGY IMPORTS

The previous sections illustrated how AFTM can be used to estimate the net effect of alternative fuels on gasoline demand, oil demands, and oil imports. It is also possible that alternative fuels use will alter total energy imports to a different degree than oil imports, and that this may be a policy concern. The total energy imports change may differ from total oil imports change if:

1. Some of the alternative fuels use imported non-oil energy (e.g. methanol or LPG);
2. The demand for non-oil fuels changes due to shifts in the non-transportation sectors, altering the imports of those fuels.

Table 4.8 Factors Offsetting Gasoline Displacement in the Multifuel Scenario (AFTM Estimates of Quantity Changes Relative to Base Case) (All in MMBD Gasoline Equivalent)	
Total Alternative Fuel Use (Excl. Gasoline in Blends)	1.48
Increased Motor Fuel Use	0.07
Increased Resid Use in Boilers	0.42
Increased Resid Use to Produce Vehicle Electricity	0.08
Increased Resid Final Demand	0.04
Increased Distillate Demand and Use to Produce Ethanol	-0.06
Reduced U.S. Oil Supply	0.15
Subtotal Domestic Offsets	0.69
Reduced U.S. Oil Imports	0.79
Total Accounted	1.48
Fraction Alternative Fuel Use Offset by Domestic Changes	46%
Reduced U.S. Total Energy Imports	0.38

The AFTM seeks to partially account for these possibilities, with the limitation that it does not consider trade in fuels other than oil and gas or their derivatives. Specifically, international trade in ethanol and all trade in coal is omitted. Those foreign countries producing ethanol, such as Brazil, are expected to consume it domestically. The omission coal trade and coal markets from the model was viewed as a reasonable simplification. It allows the model to maintain its focus on those fuels most likely to be affected by shifts in the motor fuel demand: oil and gas. While coal use is implicit in both the ethanol distillation and vehicle electricity generation processes, the quantities are too small to affect world coal prices so coal is treated as a fixed unit-cost. For the narrow boiler fuel markets where oil and gas are potentially substitutable, the prospects for substitution with coal are limited.

Table 4.9 reports the shifts in total (oil and gas-based) energy imports for the Multifuel scenario. For comparability, units used are in millions of barrels per day of gasoline equivalent (MMBDGE). We see that in the multifuel scenario the reduction in total energy imports is quite small, about half of the reduction in total oil imports. Although oil imports decline, there are two other effects that influence energy imports:

1. Methanol imports increase by about 1.2 MMBD, or 0.6 MMBDGE, relative to Base case;
2. LNG imports decline by 0.2 MMBDOE, relative to Base case.

Of these two effects, indirect effects such as the latter can only be estimated with an equilibrium model of multiple fuels. The LNG is import decline attributable to the reduced demand for gas in boiler fuel markets, as residual fuel becomes comparatively less expensive. While specific shifts like this cannot be treated as reliable forecasts, even with a more finely tuned version of the model, they do serve as useful reminders of the kinds of interactions which may be triggered by major alternative fuel initiatives.

When considering the relative merits of different alternative fuels, it is often pointed out that some fuels more effectively displace oil imports than others. It is also noted that some fuels may decrease oil imports at the expense of increasing other energy imports. The AFTM tracks these phenomena. For example, given the assumption of competitive foreign gas and methanol supply, the use of methanol does not reduce net energy imports. The significance of oil imports versus energy imports depend strongly on what we expect about the supply stability and price of the respective imported fuels.

4.8 EFFECT OF A U.S. OIL DEMAND REDUCTION ON WORLD OIL AND GAS PRICES

Displacing oil demand and imports may also have an effect on world oil and gas prices. For a given level of alternative fuel use, the reduction in oil and gas demand and the reduction in oil and gas imports depends on a variety of market interactions, as described in the previous sections. For a given level of oil and gas import changes, the effect on world energy prices will depend on non-U.S. supply and demand response.

The relationship between world oil prices and U.S. oil demand is critical for the evaluation of energy conservation and energy security policies such as flexible and alternative fuel use. We are interested in the long-run effect of a decrease in U.S. oil demand (D_{US}) estimated by AFTM. A useful index of this price effect is the percent reduction in world oil price per percentage reduction in U.S. demand. This index is just the inverse of the price elasticity of net oil supply to the U.S. (S_{NTUS}) implied by the model. The net supply to the U.S. is the total amount of world oil (domestic and foreign) available to satisfy U.S. demand after foreign demands are met. The price elasticity of S_{NTUS} will depend on the responsiveness of all the other agents in the oil market who determine the net supply of oil to the U.S.. Specifically, the market balance equation:

$$D_{US} = S_{NTUS}$$
$$D_{US} = S_{US} + S_{OPEC} + S_{ROWN} - D_{ROW}$$

indicates that the price responsiveness of net supply to the U.S. is determined by the combined response of U.S. suppliers (S_{US}), OPEC suppliers (S_{OPEC}), Rest-of-World NonOPEC suppliers (S_{ROWN}), and ROW demanders (D_{ROW}).[13] It is noteworthy that even for relatively low long-run elasticities of supply and demand, the elasticity of net supply to the U.S. (ϵ_{NTUS}) can be quite large.

[13]The price responsiveness of U.S. demand does not enter the calculation so long as we are discussing the price effect of a net reduction in U.S. demand. It is recognized that the ultimate or net demand reduction can differ from the initial or gross reduction due to leakage or demand increases as the oil price falls. The extent of such leakage will depend on the own-price responsiveness of U.S. oil demand, as well as the cross-price response of demand for other fuels which will tend to substitute towards cheaper oil. However, the estimate of the long-run price effect of a net decrease in U.S. oil demand compensates for such leakage effects.

This may be seen if the price elasticity of net supply to the U.S. is written as the weighted-sum of its component elasticities:

$$e_{NTUS} = \frac{e_{US}S_{US} + e_{OPEC}S_{OPEC} + e_{ROWN}S_{ROWN} - e_{ROW}D_{ROW}}{S_{US} + S_{OPEC} + S_{ROWN} - D_{ROW}}$$

In this expression the numerator grows with every term (since the supply elasticities are positive and the demand elasticity e_{ROW} is negative), while the denominator is supply diminished by ROW demand. If price rises, U.S. supply, OPEC supply, and ROW-NonOPEC supply may all increase, while ROW demand will decrease, producing a total increase in net supply to the U.S. which may be quite large, as a percentage of net supply. Of the terms in the above equation, the price elasticity of OPEC supply is the most uncertain.

The price or supply response of OPEC suppliers may also be monopolistic, rather than competitive, in which case the concept of an OPEC supply elasticity is not meaningful. The simple static monopolistic supplier would gauge the price responsiveness of its consumers, and adjust price accordingly to maximize profit. A monopolistic oil supplier can resist consumer pressure generated by oil displacement only so long as the displaced demand curve has the same elasticity as the initial demand curve. The optimal monopolist price is determined by the elasticity of the net demand function. Higher demand elasticities encourage the monopolist to lower its price. For the AFTM, a method was devised to estimate the elasticity of demand facing cartelized suppliers (see the Appendix A). This can then be used to estimate a simple cartel's optimal supply behavior, both with and without alternative fuels. This method has also been extended conceptually to consider the possibility of a joint oil and gas cartel. No experiments with cartelized foreign supplier behavior have yet been conducted with the version of AFTM described in this report.[14] In the planned subsequent analyses, both competitive and monopolistic OPEC supply behavior will be considered.

In the scenarios shown in this study, long-run OPEC supplier behavior was treated as "competitive" in the sense that its oil supply responds to price along an upward sloping supply curve. World gas supply was also assumed competitive. The resulting world oil and gas prices then depend only on the net reduction in world demand for oil and gas. World oil prices move together. Average[15] OPEC crude prices fell by $0.75 in the Multifuel scenari. The implied price-elasticity of net oil supply to the U.S. is about 0.4.

As a result of the decreased demand for natural gas in the U.S., domestic gas prices fall slightly. However, non-U.S. gas prices rise, as the U.S. bids for methanol supply from some of those countries which were exporting LNG to Europe and the ROW region. Thus the U.S. enjoys a double benefit (lower oil and gas prices), while foreign consumers receive mixed benefits (lower oil price and higher gas prices).

---

[14]However, tests with a previous version of AFTM [Leiby and Teisberg 1991] confirm the workability of the method for a single fuel. They also yielded results consistent with the expectation that, if OPEC supply is cartelized, an alternative fuels program which increases U.S. demand responsiveness to price may be as important for reducing world price as a program which reduces oil demand.

[15]Here we report the weighted average of light and heavy crude oil prices.

4.9 GEOGRAPHICAL SOURCES OF ALTERNATIVE FUELS

Policy makers are interested in the effect of introducing alternative motor fuels on the geographic sources of U.S. energy imports. Sources may be relevant due to:

1. their stability;
2. their geo-political and foreign policy relation to the U.S.; and
3. the implications of supplier concentration for the market power of major fuel suppliers.

While it is interesting to look at fuel trade, the specific pattern of sources and destinations is highly sensitive to regional fuel prices and assumed transportation costs. Therefore, the pattern of suppliers produced by the model is suggestive rather than definitive. For example, in the multifuel scenario there are four countries which supply methanol to the U.S. (Qatar, Trinidad, Venezuela, and Chile), of which one country supplies over half (Qatar). The model output indicated six more countries that didn't ship to the U.S., but could have if regional prices or shipping costs shifted by as little as $0.20/BBL. This caveat does not mean the shipping patterns are irrelevant. Often, the near-alternative sources of supply are geographically proximate to the ones selected by the model (in this case, Saudi Arabia, UAE, Abu Dhabi, and Argentina). In these cases we may, for example, consider imports of LNG from Qatar as representative of imports from the Persian Gulf region, and still learn something useful.

4.10 MEASURING THE NET BENEFITS OF AN ALTERNATIVE FUEL VEHICLES PROGRAM

The net benefits of a U.S. alternative-fuel vehicle program are composed of the annual benefits and costs resulting from changes in energy prices, supplies and demands in U.S. markets, including an annualized charge for the required capital investments in vehicles. As market shares change, the consumers' losses or gains from the non-price attributes of substitutable fuels and vehicles are embodied in the market sharing function's utilization cost. This approach is consistent with the widely used method for measuring welfare changes under discrete choice developed by Small and Rosen [1981]. The AFTM reports cost components associated with energy supply, transportation, import, and conversion for each region. The benefits associated with fuel consumption are subtracted, yielding a net cost for each scenario.

Table 4-9 reports the market benefits compared with vehicle costs for the Multifuel scenario. These results are included principally to indicate the AFTM methodology's ability to summarize economic measures of the consumer-welfare implications of alternative fuels. The are not meant to be definitive, and we caution against any policy conclusions based in these interim results. This net benefit measure may be further decomposed to indicate cost of imports, total alternative fuel conversion costs, etc. Similar benefits measures may also be obtained for non-U.S. regions.

A general pattern which emerges, not surprisingly, is that the estimated market benefits depend strongly on the degree to which world oil price is depressed, and the cost of the alternative fuels. In some cases the net benefits depend highly on the vehicle costs.

Table 4.9
Summary of Imports, Oil Price Changes and Benefits Estimated

	Base Case	Change from Base
		Multi-fuel Scenario
Alt. Fuel Demand (Non-gasoline component, MMBDGE)*	0.22	1.48
U.S. Oil Imports (MMBD)	10.93	-0.93
U.S. Oil Imports (MMBDGE)	12.12	-0.79
Total Energy Imports (MMBDGE)	14.14	-0.38
OPEC Ave Price of Crude ($/BBL)	28.50	-0.75
Net Market Benefit ($ Bill/y)**	0.00	-8.85
Of Which Vehicle Costs ($ Bill/y)	4.68	18.65
Of Which Sharing Function Utilization Costs ($ Bill/y)	0.00	-9.80
Net Benefit, Excl. Vehicle Sharing Utilization Costs ($ Bill/y)	0.00	-18.65

* The demand refers to the non-petroleum content of the alternative fuel.
** Benefits in this table reflect market economic consequences only, excluding possible environmental or energy security benefits.

5. SUMMARY OF MODEL CAPABILITIES AND PRELIMINARY INSIGHTS FROM MODEL EXPERIMENTS

5.1 LIMITS OF THESE ILLUSTRATIVE ANALYSES

This report presents largely illustrative results, in preparation for the full market evaluation of alternative fuels benefit and costs to be completed in the next phase. Insights are limited and preliminary. The model does not yet include all of the potentially important alternative motor fuels, although work is underway to do so. Continuing work will refine the assumptions and the general methodology documented here and apply it to evaluating alternative fuels programs such as those envisaged by the Energy Policy Act of 1992.

There are two principal categories of the example assumptions considered here which are uncertain and merit close scrutiny: fuel supply assumptions and vehicle attribute and choice assumptions. In the area of fuel supply, assumptions which strongly influenced the results presented are:

- Whether foreign remote reserves of natural gas will be supplied competitively, allowing competitive low cost methanol production;
- Whether significant supplies of lower-cost ethanol from cellulosic biomass will become available;
- What the net supply and price of LPG for motor fuel use will be, given gas market developments, competing demands (e.g. from the chemical industry) and the prospects for LPG trade; and
- Whether the response of OPEC-region oil producers to oil displacement will be more like a monopolistic than competitive supplier.

In the area of vehicle attributes and choice, influential and contentious assumptions include:

- CNG and EV vehicle costs, particularly the cost of CNG tanks and batteries;
- Vehicle refueling time, and how consumers will value it, e.g. the time for filling with CNG or recharging batteries;
- The importance of vehicle range to consumer choice, given the prospects for specialty applications (e.g. short distance commuting or delivery); and
- The relative efficiency of each alternative fuel vehicle, given engine design and anticipated use pattern.

In general, more information is needed on the consumers' valuation of the convenience and performance attributes of alternative fuel vehicles.

5.2 PRELIMINARY INSIGHTS FROM EXPERIMENTS

The preliminary results discussed here are nonetheless useful both for some general lessons learned and to indicate the sorts of insights and issues which may arise from the application of the AFTM methodology. There are some aspects of the Base and Multifuel scenario results which are

generally applicable and not likely to be influenced by updating of current assumption set. The principal energy market benefit to the U.S. of an alternative vehicle program is the reduction of U.S. oil demand and an attendant reduction in oil imports, which is likely to result in a decline in the world oil price. If imports are displaced, some price reduction is expected regardless of whether OPEC behaves competitively or monopolistically. The degree to which oil imports are reduced depends on the opportunities for fuel substitution. The refinery representation is sufficiently flexible that displacement of gasoline can be accommodated by increased middle and heavy product production, with changing product price differential encouraging greater use of those fuels.

In the absence of a significant import reduction, the oil-market benefits of alternative fuels will depend more on the expected non-competitiveness of foreign supplier behavior. If the OPEC Core behaves monopolistically, it may respond to the increased long-run elasticity of oil demand caused by the introduction of substitute alternative-fueled vehicles. Greater oil demand elasticity will create incentives for greater OPEC price declines.

The alternative vehicle/fuel types differ in their ability to displace oil imports and total energy imports. Those alternative fuel vehicles which rely on the foreign supply of gas or gas-products may also depend on whether foreign regions are willing to supply gas competitively, particularly when doing so may undermine their own oil markets. The monopolization of oil or the joint-monopolization of oil and gas, in a long-run static monopolist sense, will be addressed in subsequent work.

5.3 SUMMARY OF MODEL CAPABILITIES

As a fundamental feature of its design, the AFTM methodology restricts its attention to long-run equilibrium developments, ignoring transitional impediments and assuming alternative fuel availability. The AFTM is intended summarize the integrated set of fuel flows, conversion activities, and price responses which may occur as a result of the introduction of alternative motor fuels. While it focuses attention principally on the markets for oil and gas and their products, it is more inclusive than many existing methodologies. When used with careful attention to interpretation, and a recognition of its limitations, it can provide some new insights.

The AFTM is useful for providing a consistent fuel flow accounting in the markets for oil and gas and their products. It can decompose the offsets to alternative fuel use which may limit the ultimate reduction in oil imports, including fuel substitutions, supply and demand responses in non-motor fuel markets, and changes in fuel use by intermediate conversion processes. It estimates international oil and gas flows which, while not reliably indicating specific fuel trading partners, provides some indication of the general pattern of possible low-cost trading partners. It estimates the change in world oil and gas prices given changes in U.S. fuel import levels, allowing for the responses of other producing and consuming regions. OPEC behavior may be treated either as competitive or as a long-run static monopolist.

Alternative vehicle and motor fuel choice are endogenous and consistent in the sense that the anticipated long-run price of motor fuels is considered in the selection of either dedicated or multi-fueled vehicles. The multinomial-logit choice framework seeks to account for non-price vehicle and fuel attributes. It varies vehicle and fuel shares smoothly with changing relative prices, since the

wide variation in consumers' situations and preferences means that a mix of vehicles may be chosen, rather than just a single best alternative. Alternative fuel policy may be imposed on the model through vehicle or fuel-use constraints, or through fiscal incentives including taxes and subsidies.

The ultimate result of the AFTM is a long-run analysis of AFV economic benefits. The sensitivity of the sign of those benefits to assumptions influencing vehicle choice and relative fuel prices suggests that it is a close call. To the extent that an AFV program is not justifiable on the basis of long-run economic benefits, the promotion of AFVs must be due to other considerations. Prominent among these other considerations are vehicle emissions and oil market dynamics, both of which are not addressed in this report.

APPENDIX A.
ESTIMATING AND USING THE MONOPOLISTIC BEHAVIORAL REPRESENTATION OF OPEC CORE

A1. ESTIMATING THE CORE NET DEMAND FUNCTION[1]

The AFTM can be used to estimate the net demand function faced by the Core group within OPEC. Since the AFTM represents the final product demands of consumers and the supply behavior of crude oil producers, with due consideration of transportation and conversion activities involved in delivering final products, it is possible to run the AFTM with exogenously specified levels of Core crude oil production quantities, and obtain estimates of the Core's wellhead price resulting from these production quantities. These quantity-price combinations are points on the net demand function, and they may be used to estimate this function.

The quantity-price combinations we obtain from AFTM turn out to be consistent with a linear relationship between Core production quantity and Core oil price, at least over the range of likely Core production rates with and without methanol introduction. Thus we estimate several quantity-price points within this range, and then fit a linear function between these points. This approach has two advantages. First, it provides a convenient functional relationship (rather than isolated points) to represent the net demand function. Second, the linear fit smooths over minor irregularities in net demand; this is desirable since such irregularities often occur in models, including AFTM, which tend to characterize market reactions as discrete shifts rather than continuous smooth changes.

The EIA 2010 middle case price forecast for the Core was taken from the International Energy Outlook, adjusted for transportation costs from the Persian Gulf. The level of Core OPEC production in 2010 which achieves this price was determined based on AFTM. The AFTM was then be run with fixed Core production rates set at established increments from the base production level, to find the Core oil price resulting from each of these production rates. This produced quantity-price points which were then used to fit a linear relationship with simple regression techniques. The linear fit to the quantity- price points is very good.

The cost function of the Core group includes both direct measurable costs of producing oil, and the far less tangible opportunity cost of producing oil. The latter is the future profit that is foregone when an additional barrel of oil is sold now rather than left in the ground for sale or use at a later date. However, we can avoid having to estimate this cost function directly. Given an estimate of the net demand function and a price forecast, we can determine an implied marginal cost of oil from the marginal revenue equals marginal cost condition characterizing the price leader's optimal production choice.

While there is no evidence that suggests the Core cost function is necessarily linear and thus exhibits constant marginal cost, the introduction of flexible fuel vehicles would create only relatively minor changes in the price leader's optimal production quantity. Thus it is reasonable to assume that

[1]This is based on Leiby and Teisberg, 1991.

the marginal cost is constant over the limited range of production rates being considered in this analysis. It was assumed, given the net demand function for the Base case in 2010, that the IEO reference price is the optimal price for the OPEC Core facing this net demand. The implied optimal Core production quantity and marginal revenue for the base scenario was then determined.

For any configuration of alternative fuel demands, this method may be used to estimate the net demand facing the cartel Core. Given that net demand function, the demand elasticity may by used for a direct application of the standard inverse-elasticity rule for monopoly pricing [Tirole 1989:66]:

$$(P-MC)/P = -1/\epsilon$$

where ϵ is the elasticity of net demand facing the monopolist. For the case of the linear net demand schedule, $P = a - bQ$, the elasticity of net demand has the expression

$$\epsilon = P/(P-a)$$

Note that for a linear demand the elasticity is dependent on price, but solution for the optimal price in terms of the demand curve parameters is straightforward.

$$P = (a + MC)/2,$$

and the simple expression for the optimal price change is recovered:

$$P - P_B = (a - a_B)/2 = da/2.$$

APPENDIX B.
IMPLEMENTING THE MULTOMIAL LOGIT THROUGH THE UTILIZATION COST FUNCTION

Often in economic modeling it is useful to represent the choice among two or more alternative inputs or technologies, each of which is equally capable of satisfying some demand. In a simple economic optimization framework, the least-cost input would be chosen. Small changes in relative input price could produce dramatic substitution among inputs. To avoid this problem of "penny switching" [Manne 1989], and to introduce the influence of non-price attributes on input choice, certain sharing functions have been proposed to describe how input shares vary slowly with relative prices (e.g., Gerasoulis and Kydes 1980, Boyd, Phillips and Regulinski [1982], McFadden [1973], Anderson, DePalma and Thisse [1988]). The purpose of this note is to describe a general approach to including sharing functions in optimization models, and to provide a particular solution for the problem of including a multinomial logit choice function. This appendix is based on Leiby and Greene [1993].

Sharing Functions and the Multinomial Logit

A particular form of the sharing function which has gained considerable use is the multinomial logit (MNL) function. If the expected (indirect) utility of each alternative i can be written as a function $V_i(a_i, p_i)$ of its own attributes and price, the multinomial logit form is:

$$s_i = \frac{e^{V_i(a_i,P_i)}}{\sum_{j=1}^{n} e^{V_j(a_j,P_j)}} \quad (1)$$

In the common case where the utility functions V are linear in price, for the multinomial logit log-share-ratios are linear in price differences:

$$V_i(a_i,P_i) = \alpha_i + bP_i \quad \forall i$$
$$\rightarrow \ln\left(\frac{s_i}{s_j}\right) = (\alpha_i - \alpha_j) + \beta(P_i - P_j) \quad \forall i,j \quad (2)$$

The constant terms α_i in the multinomial logit function are nonzero and unequal in cases where equal price values (i.e., $p_i = p_j$) do not imply equal shares.

Including Sharing Functions in Optimization Models of Market Equilibria

Consider (without loss of generality) a simple case of a single aggregate demand (e.g. for energy) which may be satisfied by some mix of n possible inputs (e.g. different fuels). Assume that at this aggregate level of analysis, each unit of input fuel used satisfies one unit of aggregate demand. This feature of "unit marginal productivity of all inputs" distinguishes choice/sharing functions from conventional production functions.

The optimization approach to determining competitive market equilibria seeks supply and demand quantities which maximize consumption benefits minus producer costs (maximize consumer and producer surplus [Samuelson 1952, Manne 1976]). If all inputs to the aggregate good are indeed equally desirable in terms of satisfying aggregate demand, then the only attribute of interest in choosing among them should be their prices. If conditions change to that one input's price rises slightly above another's, then this optimization model would switch completely away from the more costly input, and its share would drop to zero.

Typically we wish to avoid imposing a non-linear sharing constraint, and the sharing function usually depends on market prices which are unavailable during the primal optimization method. To get around these problems, input choice and sharing behavior may be represented by adding a new cost component, the sharing cost function $C^s(q)$ to the objective function. The sharing cost depends on the vector of all inputs q, or rather their relative quantities. It reflects the costs of adjusting input shares toward an unbalanced mix, or may be seen as the benefit of maintaining a diversified input mix [Anderson, DePalma and Thisse 1988].

Using this augmented objective function which includes sharing costs, the following mathematical program could be solved to determine the market equilibrium:

$$\underset{q_a q_i}{Max} \int_0^{q_a} P_a(q)dq - \sum_{i=1}^{n} \int_0^{q_i} P_i(q)dq - C^s(\bar{q}) \qquad (3)$$
$$s.t. \quad \sum_{i=1}^{n} q_i = q_a$$

Here q_a is the demand for the aggregate good (the output of the sharing function). The inputs to the sharing function are q_i. The inverse demand function $P_a(q)$ describes the marginal benefit of aggregate good consumption, and the inverse supply curves for each input $P_i(q)$ describe the marginal cost of supply. The constraint simply requires that the sum of the input quantities equals the output quantity, which is the special "production function" associated with a sharing relationship.

The solution of this program may be examined by forming the Lagrangian and writing the first order necessary conditions. They indicate that at the optimum (equilibrium), the partial derivatives of the sharing cost function will be related to the input price differentials in the following way:

$$\frac{\partial C^s(\bar{q})}{\partial q_i} - \frac{\partial C^s(\bar{q})}{\partial q_j} = -(P_i - P_j) \quad \forall i,j \quad (4)$$

Here is the key step to our approach: all of the relevant information about the sharing function f must be embedded in the sharing cost C^s. Hence the sharing cost function must be constructed in such a way that its derivatives in the lefthand-side of equation (4) return the expression that the sharing function would imply for the price differential on the righthand-side of equation (4). This assures that, at the market equilibrium, input quantities adjust to a point along the sharing function which is consistent with the equilibrium input price differences. This is not possible to achieve for all imaginable sharing functions. However, the special feature of the multinomial logit shown in equation (2) suggests a promising application of the approach.

We suggest an especially convenient form of sharing cost function. First we restrict attention to sharing cost functions which are homogeneous of degree one in the total level of aggregate output from the sharing function, q_a. This assures that the sharing cost per unit aggregate output (unit sharing cost U) depends only on shares, and we can decompose the sharing cost function into a unit cost term U and a scale term q_a:[2]

$$C^s(\vec{q}) = C^s\left(\frac{\vec{q}}{\sum_k q_k}\right)\sum_k q_k = U(\vec{s})q_a \qquad (5)$$
$$\text{where } q_a = \sum q_k \quad \vec{s} = \vec{q}/q_a$$

For this form of C^s we can show that the unit utilization cost function $U(s)$ must satisfy a partial differential equation similar to that of Eq. (4), only written in terms of shares:

$$\frac{\partial C^s(\vec{q})}{\partial q_i} - \frac{\partial C^s(\vec{q})}{\partial q_j} = \frac{\partial U(\vec{s})}{\partial s_i} - \frac{\partial U(\vec{s})}{\partial s_j} = -(P_i - P_j) = P_{ij}(\vec{s}) \quad (6)$$

So for the multinomial logit sharing function, we require the cost function satisfy:

$$\begin{aligned} \frac{\partial U}{\partial s_i} - \frac{\partial U}{\partial s_j} &= -\frac{1}{\beta}\left[\ln\left(\frac{s_i}{s_j}\right) - (\alpha_i - \alpha_j)\right] \quad \forall i,j \\ &= -\frac{1}{\beta}[(\ln s_i - \alpha_i) - (\ln s_j - \alpha_j)] \quad \forall i,j \end{aligned} \qquad (7)$$

---

[2]This decomposition is possible for any function f homogeneous of degree one. A more general (but still restrictive form of C would be $C(q) = U(s)h(q_a)$ where $h(q_a) = q_a^n$ for C homogeneous of degree n. In this case:

$$\begin{aligned} \frac{\partial C}{\partial q_i} &= U(\vec{s})h'(q_a) + h(q_a)\nabla_s U(\vec{s})\cdot\frac{\partial \vec{s}}{\partial q_i} \\ &= U(\vec{s})h'(q_a) + \frac{h(q_a)}{q_a}\left(\frac{\partial U(\vec{s})}{\partial s_i} - \sum_k \frac{\partial U}{\partial q_k}s_k\right) \end{aligned}$$

This leads to a different PDE for the unit utilization cost U

$$\frac{\partial C}{\partial q_i} - \frac{\partial C}{\partial q_j} = \frac{h(q_a)}{q_a}\left(\frac{\partial U}{\partial s_i} - \frac{\partial U}{\partial s_i}\right) = -(P_i - P_j)$$

The obvious identification for the marginal unit utilization cost function is:

$$\frac{\partial U^s}{\partial s_i} = -\frac{1}{\beta}[\ln s_i - \alpha_i] \quad \forall i \quad (8)$$

We can integrate this simple equation and construct an additively separable sharing cost function which is a particular solution to the representation of the multinomial logit in the optimization framework:

$$C^s(\vec{a},\vec{q}) = q_a\left[\sum_{i=1}^{n} U_i(s_i) + \gamma\right] \quad (9)$$
$$U_i = -\frac{1}{\beta}[\ln s_i - 1 - \alpha_i]s_i \quad \forall i$$

Discussion

This method provides a workable way to impose the multinomial logit function sharing rule on a market equilibrium determined through the mathematical programming approach. The integration constant γ is arbitrary, and will have no effect on the market equilibrium. It is set so that utililization cost is zero at its minimum (which occurs for equal-price shares). Note that this sharing cost function has three desirable properties [Leiby and Greene 1993]:

1. It satisfies the first order condition necessary for the competitive equilibrium shares to conform to the sharing function, i.e. the equilibrium price differentials lie on the inverse share curves $P_{\vec{q}}(s)$;
2. At the equilibrium solution, relative input and output prices depend only on shares; and
3. The aggregate output price P_a is equal to the share-weighted input prices plus the unit utilization cost $U(s)$.

APPENDIX C
LISTING OF AFTM FUELS AND CONVERSION PROCESSES

Table C.1: Fuels Included in AFTM*
Primary Resources
Natural Gas (a primary resource, also consumed as a final product)
Light Crude Oil (a primary resource), composite blend of light/sweet crudes
Heavy Crude Oil (a primary resource), composite blend of heavy/sour crudes
Ethanol Feedstock (a primary resource), non-oil/gas inputs to grain ethanol prod.
Intermediate Products or Non-Motor Fuel Final Products
Light Petroleum Products (an aggregate refinery output, defined as 50% motor gasoline, 20% kerosene and jet fuel and 30% distillate oil)
Distillate Fuel
Residual Fuel Oil (a refinery output)
Boiler Fuel (substitutable between residual fuel oil and natural gas)
Liquified Natural Gas (LNG, for ocean transport of remote natural gas)
Isobutylene, for the production of MTBE and ETBE
Ethanol, wholesale (for subsequent blending into transport fuels) from corn or cellulosic biomass
Methanol, wholesale (for subsequent processing into transport fuels)
Ethyl Tertiary Butyl Ether, for oxygenating gasoline (ETBE)
Methyl Tertiary Butyl Ether, for oxygenating gasoline (MTBE)
Motor Fuels
Conventional Gasoline (single grade)
Reformulated Gasoline (single grade)
Gasoline oxygenated with ETBE (17.1% by volume)
Gasoline oxygenated with MTBE (15% by volume)
85% Ethanol-15% gasoline, or 85% Ethanol-15% Reformulated gasoline (E85)
Gasohol (Gasoline mixed with 10% Ethanol by volume)
Methanol 100% (motor fuel, for dedicated methanol vehicle use)
85% Methanol-15% gasoline, or 85% Methanol-15% Reformulated gasoline (M85)
Alcohol/Gasoline (motor fuel for alcohol FFVs, substitutable between E85, M85 and gasoline)
Alcohol/RFG (fuel for alcohol FFVs, substitutable between E85, M85 and Reformulated gasoline)
Compressed Natural Gas (CNG)
CNG/Gasoline (motor fuel for flexible fuel CNG vehicles, substitutable between CNG and gasoline)
Liquified Petroleum Gas (LPG)
Electricity for use by Electric Vehicles
* In some cases these fuel names are also prefixed by "W" to discriminate between wholsale/plant-gate and retail.

Table C.2: Conversion Processes in AFTM
Processes Producing Intermediate and Non-transportation Fuels
7 submodes for Low Complexity Refineries, simple refining modes with highest proportion of heavy products
10 modes for Middle Complexity Refineries
13 modes for Complex Refineries, with higher costs and higher light product fractions
Natural gas liquefaction at the point of origin (LNG-Source)
LNG regasification at the destination (LNG-Destination)
Methanol produced from natural gas
Ethanol from grain (corn) feedstock
Ethanol from cellulosic biomass[3]
Isobutylene production from refinery light products and natural gas components
ETBE production from ethanol and isobutylene
MTBE production from methanol and isobutylene
Accounting Processes to Accommodate Simpler Fuel Demands in non-U.S. Regions
Accounting process merging LPG with resid stream in non-U.S. regions
Accounting process merging unexported gasoline with light-product stream in non-U.S. regions
Accounting process merging unexported reformulated gasoline with light-product with stream in non-U.S. regions
Accounting process merging unexported distillate with light-product stream in non-U.S. regions

[3]The ethanol from biomass conversion process is under development, and is not included in the cases reported here.

Table C.2b: Conversion Processes in AFTM, Continued
Processes Generating Retail Motor Fuels
Production of motor gasoline oxygenated with ETBE, with retail markup
Production of motor gasoline oxygenated with MTBE, with retail markup
M85 production from methanol and 15% gasoline, with retail markup
Neat methanol (M100) for dedicated vehicle use, plant gate to retail markup
E85 production from methanol and 15% gasoline, with retail markup
Gasohol production from gasoline and 10% ethanol by volume, with retail markup
Vehicle electricity generation accounting for residual fuel oil and gas use
Wellhead natural gas to retail CNG markup
Refinery gate to retail gasoline markup
Refinery gate to retail reformulated gasoline markup
Plant gate to retail LPG markup
Wellhead to retail (city gate) natural gas markup

Table C.2c: Conversion Processes in AFTM, Continued
Processes Generating Inputs for Substitutable (Composite) Fuel Demands
Substitutable natural gas use for boiler fuel
Substitutable residual fuel oil use for boiler fuel
Substitutable gasoline use for Alcohol-Gasoline FFVs
Substitutable E85 use for Alcohol-Gasoline FFVs
Substitutable M85 use for Alcohol-Gasoline FFVs
Substitutable reformulated-gasoline use for Alcohol-Gasoline FFVs in RFG regions
Substitutable E85 use for Alcohol-Gasoline FFVs in RFG regions
Substitutable M85 use for Alcohol-Gasoline FFVs in RFG regions
Substitutable gasoline use for CNG-Gasoline FFVs
Substitutable CNG use for CNG-Gasoline FFVs
Substitutable reformulated-gasoline use for CNG-Gasoline FFVs in RFG areas
Substitutable gasoline use for CNG-Gasoline FFVs in RFG areas

APPENDIX D
LISTING OF ACRONYMS USED

AEO	Annual Energy Outlook (U.S. Energy Information Administration
AFTM	Alternative Fuels Trade Model
AFV	Alternative Fuel Vehicle
BTU	British Thermal Unit
CNG	Compressed Natural Gas
CV	Conventional Vehicle
DFV	Dual Fuel Vehicle
DOE	U.S. Department of Energy
E85	85% Ethanol
EPACT	Energy Policy Act
FFV	Flexible Fuel Vehicle
FOE	Fuel Oil Equivalent
GAMS	General Algebraic Modeling System
GE	Gasoline Equivalent
EIA	U.S. Energy Information Administration
LNG	Liquified Natural Gas
LPG	Liquid Petroleum Gas
M100	100% Methanol
M85	85% Methanol
MMBD	Million Barrels Per Day
MMBDGE	Million Barrels Per Day Gasoline Equivalent
MMBDOE	Million Barrels Per Day (Fuel) Oil Equivalent
OPEC	Organization Of Petroleum Exporting Countries
ORNL	Oak Ridge National Laboratory
ROW	Rest of World region

REFERENCES

Anderson, S.P., A. de Palma and J.F. Thisse 1988. "A Representative Consumer Theory of the Logit Model," International Economic Review, 461-6, August.

Boyd, D. W., R. L. Phillips and S. G. Regulinski 1982. "A Model of Technology Selection by Cost Minimizing Producers", Management Science 28:418-424.

Boutacoff, David 1989. "Methanol: A Fuel for the Future?" EPRI Journal, pp. 24-31, October/November.

British Petroleum, 1976. Worldwide Marine Distance Tables, Vols 1 and 2.

Brooke, A., D. Kendrick and A. Meeraus 1988. GAMS: A User's Guide, Scientific Press, Redwood City, California.

Daly, George, James M. Griffin and Henry B. Steele 1982. "Recent Oil Price Escalations: Implications for OPEC Stability," in James M. Griffin and David J. Teece, eds., OPEC Behavior and World Oil Prices (London: George Allen & Unwin).

Devarajan, Shantayanan and Anthony C. Fisher 1981. "Hotelling's 'Economics of Exhaustible Resources': Fifty Years Later," Journal of Economic Literature, 19:65-73, March.

Fishbein, Lawrence and Carol J. Henry 1990. "Health Effects of Methanol: An Overview," Wilfrid L. Kohl, ed., Methanol as an Alternative Fuel Choice: An Assessment, (Washington, D.C.: Johns Hopkins University).

Golob, Thomas F., Ryuichi Kitamura, David S. Bunch, Mark Bradley, and Jacqueline Golub 1992. "Final Report: Clean Vehicle/Fuels Stated Preference Pilot Study," Submitted to the Demand Forecasting Office, California Energy Commission, Draft: May 1.

Greene, David L. 1990. "Fuel Choice for Multi-Fuel Vehicles," Contemporary Policy Issues, VIII:118-137, October.

Greene, David L. 1993. "Choice of Alternative Fuels and Alternative Fuel Vehicles in the AFTM," Oak Ridge National Laboratory, August.

Hadder, Jerry and Paul Leiby 1992. "Enhancement of the Refinery Representation in the Alternative Fuels Trade Model, Oak Ridge National Laboratory, April.

Haverkamp, D.S., P.S. Springer and E.H. Vidas 1991. "Development Costs of Undeveloped Non-Associated Gas Reserves in Selected Countries," Energy and Environmental Analysis, Inc., February.

Hnyilicza, Esteban and Robert S. Pindyck 1976. "Pricing Policies For a Two-Part Exhaustible Resource Cartel," European Economic Review 8:139-54.

Hotelling, Harold 1931. "The Economics of Exhaustible Resources," Journal of Political Economy, 39(2):31-48.

Krupnick, Alan J. and Margaret A. Walls 1991. "The Cost Effectiveness of Methanol for Reducing Motor Vehicle Emissions and Urban Ozone Levels," forthcoming in Journal of Policy Analysis and Management.

Krupnick, Alan J., Margaret A. Walls and Michael A. Toman 1990. "The Cost-Effectiveness and Energy Security Benefits of Methanol Vehicles," Resources For the Future, Quality of the Environment Division, Discussion Paper QE90-25, September.

Leiby, Paul N. and David L. Greene 1993. "Including Sharing Functions in an Optimization Framework: The Multinomial Logit Case," Oak Ridge National Laboratory, Draft, February 24.

Leiby, Paul N. and Thomas J. Teisberg 1991. Market Benefits of Methanol Motor Fuel Use, Oak Ridge National Laboratory, ORNL-6676, December 2.

Leiby, Paul and Anthony Turhollow, 1992. "Ethanol Supply Curves for the Alternative Fuel Trade Model," Oak Ridge National Laboratory, ORNL/TM-12086, May.

Machiele, Paul A. 1990. "A Health and Safety Assessment of Methanol as an Alternative Fuel," Wilfrid L. Kohl, ed., Methanol as an Alternative Fuel Choice: An Assessment, (Washington, D.C.: Johns Hopkins University).

Manne, Alan S. 1976. "ETA: A Model for Energy Technology Assessment," Bell Journal of Economics, 7:379-406.

Manne, A. and M. Rothkopf, 1988. "Analyzing U.S. Policies for Alternative Automotive Fuels," Stanford University and Rutgers University, November.

Manne, A. 1990. "Documentation for AFTM: An Alternative Fuels Trade Model," April.

McFadden, D. 1974. "Conditional Logit Analysis of Qualitative Choice Behavior," in Frontiers in Econometrics, pp. 105-142, P. Zarembka (ed.), Academic Press, New York.

McGartland, Al, Michael Shelby, Brad Firlie and Phil Giordano 1991. "A Methodology for Evaluating the Costs and Global Warming Implications of Ethanol," Report Prepared for the Air and Energy Policy Division, Office of Policy Analysis, U.S. Environmental Protection Agency, April 2.

Okken, P.A. 1991. "Communication: A Case for Alternative Transportation Fuels," Energy Policy, May, 400-5.

Pindyck, Robert S. 1978. "Gains to Producers From the Cartelization of Exhaustible Resources," Review of Economics and Statistics, May.

Pindyck, Robert S. 1979. "Some Long-Term Problems in OPEC Oil Pricing," Journal of Energy and Development, Spring.

Samuelson, P. 1952. "Spatial Price Equilibrium and Linear Programming," American Economic Review, June.

Short, Glyn D. ICI Products General Chemical Business, 1991. Personal communication to Benton F. Massell, U.S. Department of Energy, June 3.

Small, Kenneth A. and Harvey S. Rosen 1981. "Applied Welfare Economics with Discrete Choice Models," Econometrica, 49(1):105-130, January.

Tirole, Jean 1989. The Theory of Industrial Organization (Cambridge, MA: MIT Press).

Train, Kenneth 1986. Qualitative Choice Analysis (Cambridge MA: MIT Press).

Tyson, K. Shaine 1990. "Biomass Resource Potential of the United States," Solar Energy Research Institute, Draft, October.

U.S. Congress, Office of Technology Assessment (OTA) 1990. Replacing Gasoline: Alternative Fuels for Light Duty Vehicles, Summary.

U.S. Department of Energy, 1987. "Energy Security: A Report to the President of the United States."

U.S. Department of Energy, Office of Technology Policy, 1987. "Long Range Energy Projections," Washington, D.C., August.

U.S. Department of Energy, 1988. "Assessment of Costs and Benefits of Flexible and Alternative Fuels Use in the U.S. Transportation Sector: Progress Report One: Context and Analytical Framework."

U.S. Department of Energy/Chem Systems, 1989. "Assessment of Costs and Benefits of Flexible and Alternative Fuels Use in the U.S. Transportation Sector: Technical Report Three: Methanol Production and Transportation Costs," DOE/PE-0093, November.

U.S. Department of Energy, 1990. "Assessment of Costs and Benefits of Flexible and Alternative Fuels Use in the U.S. Transportation Sector: Technical Report Four: Vehicle and Fuel Distribution Requirements," DOE/PE-0095P, August.

U.S. Department of Energy, Energy Information Administration 1985. "Demand Analysis System Elasticities," EIA-0475, June.

U.S. Department of Energy, Energy Information Administration 1987. Monthly Energy Review, April.

U.S. Department of Energy, Energy Information Administration 1993. Annual Energy Outlook 1990, DOE/EIA-0383(93), January.

U.S. Department of Energy, Energy Information Administration 1993a. International Energy Outlook 1993, DOE/EIA-0484(93), April.

U.S. Department of Energy, Energy Information Administration 1993b. Assumptions for the Annual Energy Outlook 1993, DOE/EIA-0527(93), January.

U.S. Department of Energy/Energy and Environmental Analysis Inc (U.S. DOE/EEA) 1993. Assessment of Costs and Benefits of Flexible and Alternative Fuel Use in the U.S. Transportation Sector, Technical Report Nine: Development of Costs of Undeveloped Nonassociated Gas Reserves in Selected Countries, DOE/EP-003P, January.

U.S. Energy Information Administration, 1987. Monthly Energy Review, U.S. Department of Energy, Washington, D.C., May.

Varian, Hal R. 1978. Microeconomic Analysis, (New York: W.W. Norton & Company).

Walls, Margaret A. and Alan J. Krupnick 1990. "Cost-effectiveness of methanol vehicles," Resources, (Resources for the Future) 100:1-5, Summer.

Wang, Q., D. Sperling and J. Olmstead 1993. "Emission Control Cost-Effectiveness of Alternative-Fuel Vehicles," Institute of Transportation Studies, University of California, Davis, CA.

Willig, R. 1976. "Consumer Surplus Without Apology," American Economic Review, 66:589-97.

Wirl, Franz 1985. "Stable and Volitile Prices: an Explanation by Dynamic Demand," Gustav Fechtinger, ed, Optimal Control Theory and Economic Analysis 2, 263-277.

Wirl, Franz 1988. "Dynamic Demand, Consumer Expectations and Monopolistic Resource Extraction," Paper Presented at the Optimization Days at Montreal, May 2-4.

INTERNAL DISTRIBUTION

1. J. B. Cannon
2. B. R. Cleaves
3. T. R. Curlee
4. D. L. Greene
5. M. A. Kuliasha
6. R. Lee

7-27. P. Leiby

28. R. B. Shelton
29. ORNL Patent Office
30. Central Research Library
31. Document Reference Section

32-34. Laboratory Records

35. Laboratory Records - Record Copy

EXTERNAL DISTRIBUTION

29. Alan Manne, ASM Associates, 834 Esplanada, Stanford, CA 94305

30-50. Dr. Benton Massell, PE-50, Office of Energy Demand Policy, Department of Energy, RM-7H021, Forrestal Building, 1000 Independence Avenue, S.W., Washington, D.C. 20583

51. Dr. Thomas Teisberg, Teisberg Associates, 25 Applecrest Road, Weston, MA 02193

52. Dr. Phil Tseng, PO-61, Department of Energy, 1000 Independence Avenue, S.W., Washington, D.C. 20585

53-56. Harry Vidas, 1655 North Fort Meyer, Suite 600, Arlington, VA 22209

57. Office of Assistant Manager for Energy Research and Development, DOE-ORO, P.O. Box 2001, Oak Ridge, TN 37831-8600

58-59. OSTI, Department of Energy, P.O. Box 62, Oak Ridge, TN 37831