AUG 24 1994

ornl

OAK RIDGE NATIONAL LABORATORY LIBRARIES

3 4456 0566315 4

ORNL/TM-11250

OAK RIDGE NATIONAL LABORATORY

MARTIN MARIETTA

Preliminary Analysis of the ORNL Liquid Low-Level Waste System

T. J. Abraham
S. M. DePaoli
S. M. Robinson
A. B. Walker

MANAGED BY
MARTIN MARIETTA ENERGY SYSTEMS, INC.
FOR THE UNITED STATES
DEPARTMENT OF ENERGY

This report has been reproduced directly from the best available copy.

Available to DOE and DOE contractors from the Office of Scientific and Technical Information, P.O. Box 62, Oak Ridge, TN 37831; prices available from (615) 576-8401, FTS 626-8401.

Available to the public from the National Technical Information Service, U.S. Department of Commerce, 5285 Port Royal Rd., Springfield, VA 22161.

This report was prepared as an account of work sponsored by an agency of the United States Government. Neither the United States Government nor any agency thereof, nor any of their employees, makes any warranty, express or implied, or assumes any legal liability or responsibility for the accuracy, completeness, or usefulness of any information, apparatus, product, or process disclosed, or represents that its use would not infringe privately owned rights. Reference herein to any specific commercial product, process, or service by trade name, trademark, manufacturer, or otherwise, does not necessarily constitute or imply its endorsement, recommendation, or favoring by the United States Government or any agency thereof. The views and opinions of authors expressed herein do not necessarily state or reflect those of the United States Government or any agency thereof.

ORNL/TM-11250

Chemical Technology Division

PRELIMINARY ANALYSIS OF THE ORNL LIQUID LOW-LEVEL WASTE SYSTEM

T. J. Abraham
S. M. DePaoli
S. M. Robinson
A. B. Walker

Date Published: August 1994

Prepared by
OAK RIDGE NATIONAL LABORATORY
Oak Ridge, Tennessee 37831-6285
managed by
MARTIN MARIETTA ENERGY SYSTEMS, INC.
for the
U.S. DEPARTMENT OF ENERGY
under contract DE-AC05-84OR21400

CONTENTS

LIST OF TABLES v

LIST OF FIGURES vii

PREFACE ix

1. INTRODUCTION 1

2. LLLW SYSTEM DATABASE 1
   2.1 LLLW GENERATOR (SOURCE) INFORMATION 3
   2.2 LLLW COLLECTION TANK DATA 3
   2.3 EVAPORATOR DATA 5
   2.4 CONCENTRATE DATA 5
   2.5 DEVELOPMENT PLANS FOR THE LLLW SYSTEM DATABASE 6

3. LIQUID LOW-LEVEL WASTE SYSTEM 6
   3.1 LLLW COLLECTION SYSTEM 8
   3.2 LLLW EVAPORATOR FACILITY 12
   3.3 LLLW EVAPORATOR FACILITY COMPLEX 12
   3.4 LLLW CONCENTRATE STORAGE TANKS 16

4. LLLW SOURCES AND GENERATION 16
   4.1 LLLW GENERATORS 17
      4.1.1 Isotopes Area 23
      4.1.2 3039 Stack Area 23
      4.1.3 High Flux Isotopes Reactor 25
      4.1.4 Oak Ridge Reactor/Bulk Shielding Reactor/Old Graphite Reactor 25
      4.1.5 Fission Products Development Laboratory 26
      4.1.6 High Radiation Level Examination Laboratory 27
      4.1.7 4500 Complex 27
      4.1.8 Radiochemical Engineering Development Center 28
      4.1.9 Overall System Collection Rates 28

   4.2 RAINFALL INLEAKAGE INTO THE LLLW SYSTEM 31

5. CONCENTRATE GENERATION 31
   5.1 SOLIDIFICATION OF LLLW CONCENTRATE 34
   5.2 IN-TANK EVAPORATION 35
   5.3 LLLW CONCENTRATE GENERATION 37

6. LLLW SYSTEM PERFORMANCE 38
   6.1 DATA SOURCES AND COLLECTION 38

6.2 DATA ANALYSIS 39
6.2.1 Relationship Between VRF and LLLW Collections from Specific Generators 39
6.2.2 Operational Variability 41
6.3 RESULTS 43

7. LLLW SYSTEM MASS BALANCE 45

8. CONCLUSIONS AND RECOMMENDATIONS 51

REFERENCES 55

LIST OF TABLES

Table		Page
1.	1988 LLLW generation rates: Liquid and Gaseous Waste Operations (WOCC) data vs generator estimates	4
2.	Collection tanks' capacities and source buildings	10
3.	Division's contributions to dilute LLLW generation 1986–1989	18
4.	Average monthly dilute LLLW generation (for period January 1986–June 1989)	18
5.	Average monthly dilute LLLW generation for 1986	19
6.	Average monthly dilute LLLW generation for 1987	20
7.	Average monthly dilute LLLW generation for 1988	21
8.	Average monthly dilute LLLW generation for 1989	22
9.	Annual LLLW stream components for the Isotopes Area	24
10.	Annual LLLW stream components for the 4500 complex	29
11.	Annual LLLW stream components for the REDC	30
12.	Summary of annual LLLW production rates	30
13.	Liquid low-level waste concentrate tank volumes and capacities	35
14.	LLLW concentrate generation, 1986–1990	37
15.	LLLW evaporator data, 1986–1988	40
16.	LLLW evaporator data, 1987–1988	45
17.	Mass flow of nonradiological components in the LLLW system (for stream numbers, refer to Fig. 12)	46,47
18.	Curie flow of radiological components in the LLLW system (for stream numbers, refer to Fig. 12)	48,49

LIST OF FIGURES

Figure		Page
1.	Liquid low-level waste (LLLW) database menu structure	2
2.	LLLW system	7
3.	Location of the active LLLW collection tanks	9
4.	Typical low-level waste collection tank	11
5.	Underground LLLW transfer line between Bethel Valley and Melton Valley	13
6.	Plan view of the Radioactive Waste Evaporator Facility (Bldg. 2531)	14
7.	LLLW generation plotted as a function of rainfall for CY 1988	32
8.	Time-ordered plot of LLLW and rainfall collected during CY 1988	33
9.	LLLW concentrate storage volume occupied over time period 1985–1989	36
10.	Volume reduction factor (VRF) as a function of dilute LLLW fed to the evaporator	42
11.	Evaporator performance 1986–1988: VRF as a function of average feed per batch	44
12.	Stream designations for generators of LLLW	50
13.	Present status of the LLLW database	54

PREFACE

This report documents liquid low-level waste (LLLW) generation from 1986 through mid-1990. The report was written and submitted in draft form in 1990; however, it was not published in final form. Information contained within the report is accurate for the time it was written; however, several changes have been incurred in the LLLW system since that time. The report has not been updated to reflect these changes but is submitted *as is* to serve as a companion to report ORNL/TM-12638, *Liquid Low-Level Waste Generation Projections for ORNL in 1993*, which summarizes LLLW generation from 1990 through 1993.

PRELIMINARY ANALYSIS OF THE ORNL LIQUID LOW-LEVEL WASTE SYSTEM

T. J. Abraham
S. M. DePaoli
A. B. Walker
S. M. Robinson

1. INTRODUCTION

The objective of this report is to summarize the status of the Liquid Low-Level Waste (LLLW) Systems Analysis project. The focus of this project has been to collect and tabulate data concerning the LLLW system, analyze the current LLLW system operation, and develop the information necessary for the development of long-term treatment options for the LLLW generated at ORNL.

The data used in this report were collected through a survey of Oak Ridge National Laboratory (ORNL) literature, various letter reports, and a survey of all current LLLW generators. These data are also being compiled in a user friendly database for ORNL-wide distribution. The database will allow the quick retrieval of all information collected on the ORNL LLLW system and will greatly benefit any LLLW analysis effort. This report summarizes the results for the analyses performed to date on the LLLW system.

2. LLLW SYSTEM DATABASE

A database has been developed in DBASE III+ to store, retrieve, and analyze information concerning the LLLW system at ORNL. Menus are being written to enable people who are unfamiliar with DBASE to use the database. When completed, the database will be accessible through a user friendly software program that will not require the presence of DBASE on the personal computer.

The structure of the database has been previously summarized in a letter report to C. H. Brown, Jr., entitled "Compilation of LLLW Systems Data," dated March 31, 1989. Figure 1 shows the basic structure of the menu-driven software that will enable users to retrieve data.

ORNL DWG 93A-876R

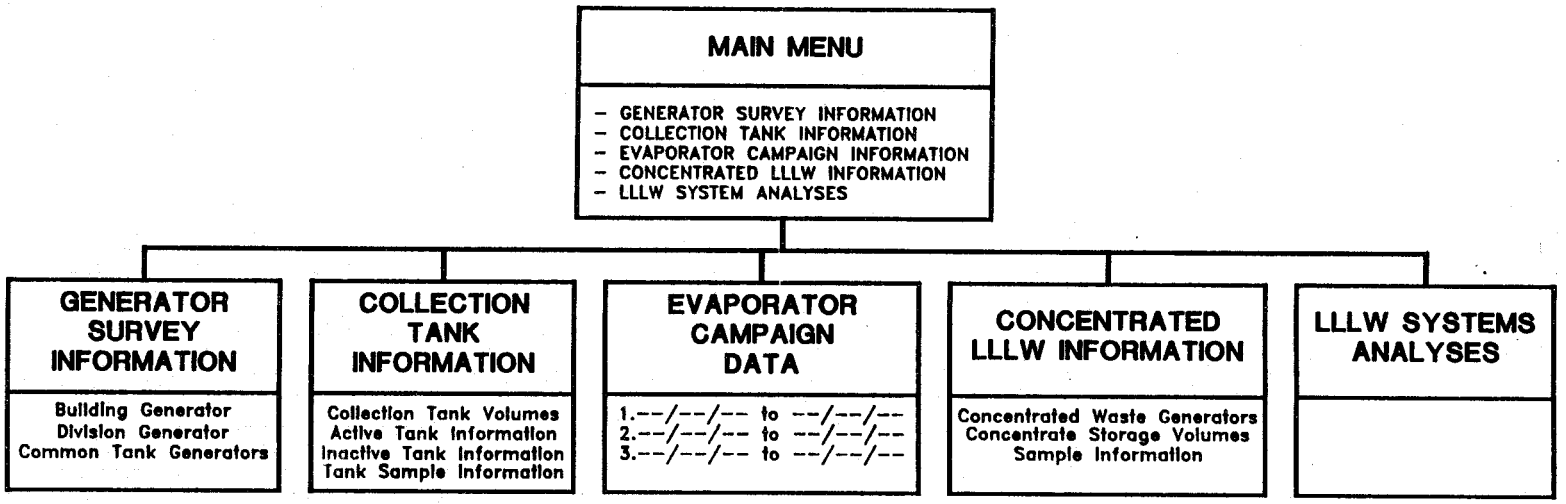

Fig. 1. Liquid low-level waste (LLLW) database menu structure.

Information contained in the database includes (1) LLLW generator (source) information, (2) LLLW collection tank data, (3) evaporator/evaporation data, and (4) LLLW concentrate data. Some analysis of the data will be included as an option from the main menu. These data, in addition to being accessible as a database, are summarized in the following sections of this report. The data have been extensively analyzed, and this analysis produced the input for this report.

2.1 LLLW GENERATOR (SOURCE) INFORMATION

Generator information has been obtained through the help of the Liquid Generation Certification Officials (LGCOs), who were appointed by their divisions to provide data concerning liquid wastes (low-level and process) generated in their particular area. The information from the LGCOs contained in the database includes estimated LLLW generation volumes, waste contaminants (chemical and radioactive), predictions of future waste generation, and waste pretreatment steps currently in use, if any. General descriptions of the activities performed in the areas are also included.

Table 1 compares the 1988 dilute LLLW generation rates as reported by the Liquid and Gaseous Waste Group in the Environmental and Health Protection (E&HP) Division vs those estimated rates as provided by LGCOs. In addition, the amount of rainwater collected in tanks that were identified as being significantly influenced by rainfall (Sect. 4.2) are included. As Table 1 demonstrates, the total monthly volume generation rates compare very favorably, particularly when rainfall influence is taken into account. This information, with estimates of radioactive and other contaminates provided by the LGCOs as well as direct sampling data, has been used to construct a mass balance of the LLW system. This mass balance is presented in Chap. 7.

2.2 LLLW COLLECTION TANK DATA

Daily LLLW collection volume data have been obtained from the weekly summary reports distributed by the Liquid and Gaseous Waste Operations Group of the E&HP Division and are included in the database. These reports were first distributed in 1986, and all reports have been entered into the database. The levels in

Table 1. 1988 LLLW generation rates: Liquid and Gaseous Waste Operations (WOCC)[a] data vs generator estimates

Building/area served	Tank	1988 monthly average per WOCC (gal)	Generator-estimated monthly average (gal)	Rainfall collection for specific tanks (gal/month)[b]
Isotope area[c]	WC-10	1,611	861	
3039 stack area	W-22	3,275	3,275	
Reactors	WC-19	1,378	1,062	829
Abandoned	W-1A	1,161	0	2,394
Bldg. 2026	2026	84	1	
Bldgs. 4500N, 4505, 4507	WC-11	594	0	346
Bldgs. 4505, 4507	WC-12	180	130	
Bldgs. 4500N, 4500S, 4501, 4508	WC-13	667	121	
Bldg. 4501	WC-14	163	41	
Bldg. 3517	W-22	3,150	2,836	513
Pump pit	WC-8	537	537	
Bldg. 3503 & off-gas drain	WC-9	337	337	
Bldg. 3508	WC-5, WC-6	160	0	104
Bldg. 3525	W-12	1,857	900	
Bldg. 3544 feed	W-22	652	652	
Bldg. 7920 (REDC)[a]	WC-20	1,742	1,753	
Bldg. 7900 (HFIR)[a]	HFIR	2,996	3,029	
Bldg. 3028	WC-2	91	0	
Bldg. 3504	WC-7	21	8	
Bldg. 3026D	W-16	410	0	
Bldg. 3026C	W-17 & W-18	1,745	202	967
Bldg. 3019	W-22	899	890	
Bldg. 3025	WC-3	19	18	
Bldg. 3074	Trucked	352	382	
Bldg. 7602 (EGCR)[a,d]	Trucked	315	500	
Bldg. 7500[e]	Trucked	52	52	
Bldg. 2531 sumps, etc.	W-22	1,971	1,971	
TOTAL		26,419	19,558	5,153

[a]WOCC = Waste Operations Control Center; REDC = Radiochemical Engineering Development Center; HFIR = High Flux Isotope Reactor; EGCR = Experimental Gas-Cooled Reactor.

[b]These volumes exclude those already taken into consideration by the generator and/or Waste Operations. Calculations are based on time series analysis results.

[c]Isotopes area includes Bldgs. 3028E, 3029, 3030, 3031, 3032, 3033, 3033A, 3038E, and 3047.

[d]EGCR will not be transporting any waste to the LLLW evaporator in 1989.

[e]The LLLW volume from the 7500 area in 1988 was a one-time transfer of 620 gal.

the 22 active LLLW collection tanks are measured daily, and the daily collection volumes are calculated from differences in level changes. Other information in the database concerning the collection tanks includes tank capacities, locations, rainwater inleakage rates, and source buildings that feed each tank. Sample analyses that have been performed on any of the collection tank wastes are kept in the database as well.

2.3 EVAPORATOR DATA

General information concerning the evaporator and evaporator service tanks has been recorded in the database. During operation of the evaporator system, liquid volumes transferred into and out of the evaporators are recorded by the operators. Several thousand gallons of dilute LLLW may be transferred into the evaporator at distinct time intervals before concentrate is removed. This information was analyzed and put into the computer and is referred to as "evaporator campaign" data. A campaign begins with the first transfer of LLLW into the evaporator and ends with the first removal of concentrate. Data beginning in 1986 have been summarized in this way and recorded in the database. These data were analyzed to determine the major contributors of LLLW concentrate. These data also allow volume reduction factors to be calculated.

2.4 CONCENTRATE DATA

Concentrate removed from the evaporator is pumped to one of several storage tanks [Melton Valley Storage Tanks (MVSTs), W-21, W-23, C-1, or C-2]. Routinely generated Process Waste Treatment Plant (PWTP) concentrate is stored in tank W-21. The volumes of concentrate generated are kept in the database, as well as the monthly readings of the liquid levels in the storage tanks. (There is a slight discrepancy between the recorded concentrate volumes generated and the storage tank volume increases because of the accuracy of the instrumentation; therefore, both sets of data are recorded.) Several sample campaigns have been performed on the MVST contents. The analytical results from these sampling campaigns are recorded in the database also.

2.5 DEVELOPMENT PLANS FOR THE LLLW SYSTEM DATABASE

As mentioned in the Introduction, the database will be accessed by a user friendly, menu-driven software program. A general outline of the menus used to retrieve the data was shown in Fig. 1. The completed work to date includes the programming for the first three selections from the main menu, that is, retrieval of the generator information, the collection tank information, and the evaporator campaign information. Work is continuing on the concentrated LLLW information and system analysis retrieval systems. User documentation will be prepared, and training classes will be held to introduce users to the capabilities of the database as part of the FY 1990 milestone.

3. LIQUID LOW-LEVEL WASTE SYSTEM

Radioactively contaminated liquid wastes at ORNL are generated by various activities, including research activities that are performed within many divisions, various decontamination activities also practiced throughout several divisions, and reactor operations performed mainly in the Research Reactors Division. Other significant sources of LLLW include the Laboratory's waste treatment facilities, which are the PWTP (Building 3544) and the Central Off-Gas (COG) scrubbing system (Building 3039). A large amount of waste is expected to be generated during remedial actions' cleanup of inactive tanks and facilities during the next 10 years. Further discussion of the LLLW and its sources is found in Chap. 4.

Figure 2 shows a schematic of the LLLW system. LLLW generated by the various activities at the Laboratory is discharged by way of "hot" drains located in laboratory sinks, hoods, floors, and hot cells. In some cases the liquid is collected and trucked. Waste that is discarded down "hot" drains flows by gravity through singly- or doubly-contained pipes to underground stainless steel collection tanks, where the waste is neutralized, if necessary. These primary tanks (and associated piping) are known as the Collection and Transfer (CAT) System. The waste accumulated in the collection tanks is transferred via steam jets or pumps through underground piping to the LLLW Evaporator Facility (Building 2531), where it is concentrated in one of two evaporator units. From there, the concentrated waste is transferred to one of many storage tanks

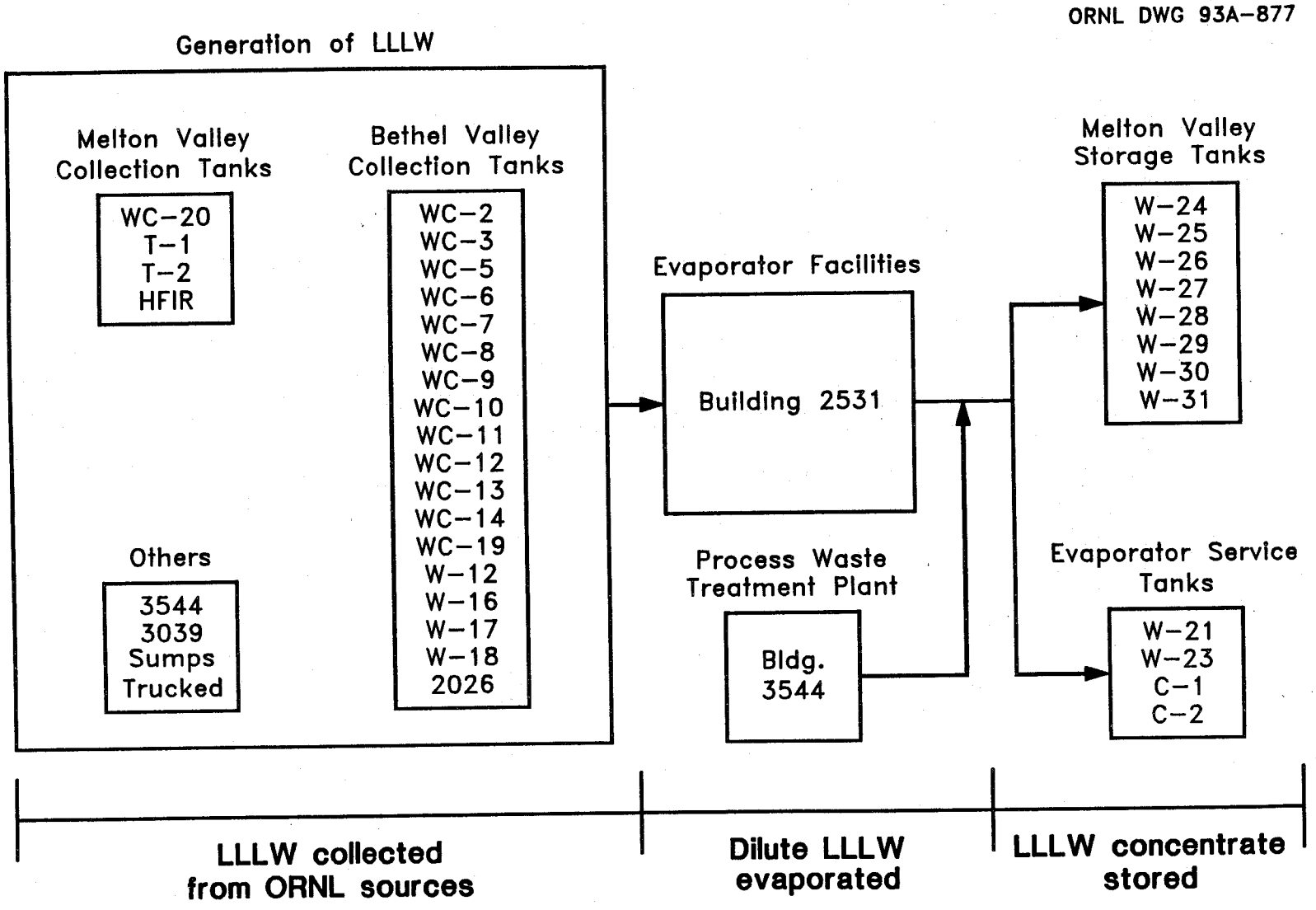

Fig. 2. LLLW system.

(the MVSTs or Evaporator Service Tanks), and the condensate is transferred to the PWTP for further treatment.

3.1 LLLW COLLECTION SYSTEM

The CAT System is divided into two branches, the Melton Valley branch and the Bethel Valley branch. Currently, there are 22 active collection tanks, 4 tanks that serve the Melton Valley area and 18 tanks that serve the Bethel Valley area. There are 33 inactive collection and storage tanks. The locations of the active collection tanks are shown in Fig. 3. Also shown in the figure is the inactive tank W-1A, which is periodically pumped to the evaporator system because of rainwater inleakage. The collection tanks and their capacities are given in Table 2.

The CAT System was designed in the 1950s. Most of the floor drains, collection tanks, and transfer lines in the system are singly contained. The system was designed to work ~20 years; however, most of the system is older than this. Current regulations and orders pertaining to this system require doubly-contained piping and tanks, leak detection, and extensive documentation of waste generation. To comply with the regulations, the system is being upgraded and/or replaced. The work is under way and is expected to take ~6 years to complete.

Each collection tank is equipped with a sampling device, liquid-level instrumentation, and a filtered vent to the atmosphere or to the off-gas system of the facility that it serves. Underground collection tanks in the Bethel Valley area have *dry wells*, which are concrete pads with sumps located at the low point under the tanks and wells extending to the surface of the ground. The dry well serves as a sampling point for groundwater surrounding the tank, an indication of leakage from the tank. A typical tank design is shown in Fig. 4. A network of 0.05- and 0.08-m (2- and 3-in.) stainless steel underground pipelines connects the collection tanks to one of two 0.15-m (6-in.) doubly-contained, stainless steel collection headers that directs the flow through doubly-contained piping to the evaporator feed tank, W-22. Several source buildings send waste from "facility" tanks directly to the collection header at valve box #2. (These tanks are not owned by E&HP Division and are not discussed in this document.) Waste is transferred by centrifugal pumps or steam jets.

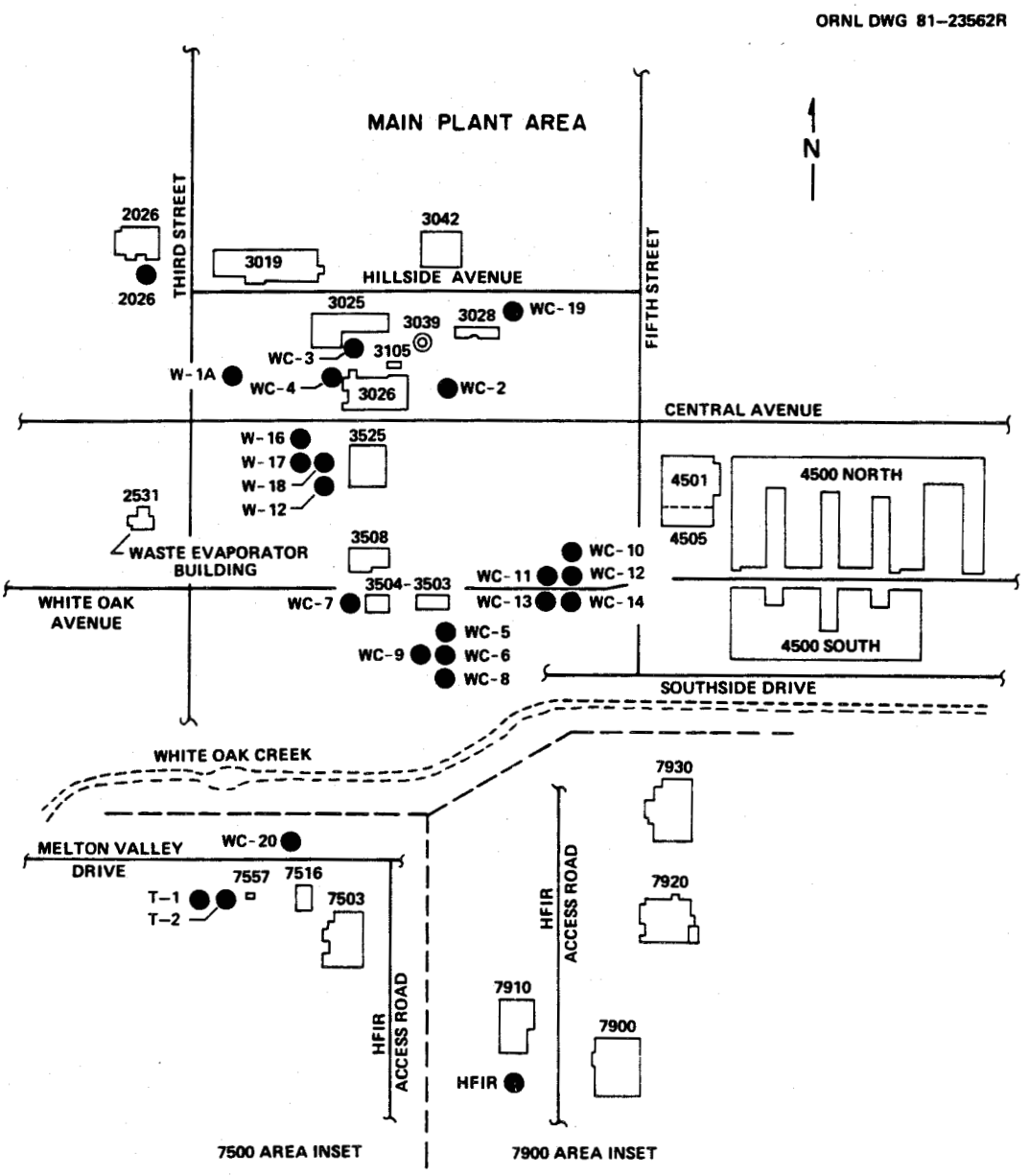

Fig. 3. Location of the active LLLW collection tanks.

Table 2. Collection tanks' capacities and source buildings

Tank	Tank size (gal)	Tank location	Source building(s)
		Bethel Valley Collection Tanks	
2026	500	E. of Bldg. 2026	2026
W-1A	4,000	North Tank Farm	(None, tank is inactive)
WC-2	1,000	W. of Bldg. 3030	3028, 3038
WC-3	1,000	S. of Bldg. 3025	3025, 3098
WC-4	1,700	W. of Bldg. 3026C	(None, tank is inactive)
WC-5	1,000	S. of Bldg. 3503	3508
WC-6	500	S. of Bldg. 3503	3508
WC-7	1,100	W. of Bldg. 3504	3504
WC-8	1,000	S. of Bldg. 3503	Pump pit
WC-9	2,140	S. of Bldg. 3503	3503, HOG pot
WC-10	2,300	S. of Bldg. 3587	3028, 3029, 3030, 3031, 3032, 3033, 3047, 3092, 3093, 3110
WC-11	4,600	S. of Bldg. 3587	4500N, 4505, 4507
WC-12	1,000	S. of Bldg. 3587	4505
WC-13	1,000	S. of Bldg. 3587	4500N, 4500S, 4501, 4508
WC-14	1,000	S. of Bldg. 3587	4501
WC-19	2,100	S. of Bldg. 3587	3001, 3002, 3003, 3004, 3005, 3008, 3042, 3109, 3119
W-12	700	South Tank Farm	3525
W-16	1,000	South Tank Farm	3026D
W-17	1,000	South Tank Farm	3026C
W-18	1,000	South Tank Farm	3026C
		Melton Valley Collection Tanks	
WC-20	10,000	Melton Valley	7920, 7930
T-1	15,000	Melton Valley Melton Valley	7500, 7503, 7900, 7911, 7913, 7920,[a] 7930[a]
T-2	15,000	Melton Valley	7500, 7503, 7900, 7911, 7913, 7920,[a] 7930[a]
HFIR	13,000		7900, 7911, 7913

[a]These facilities do not normally transfer waste to this tank.

ORNL DWG 88A-623R3

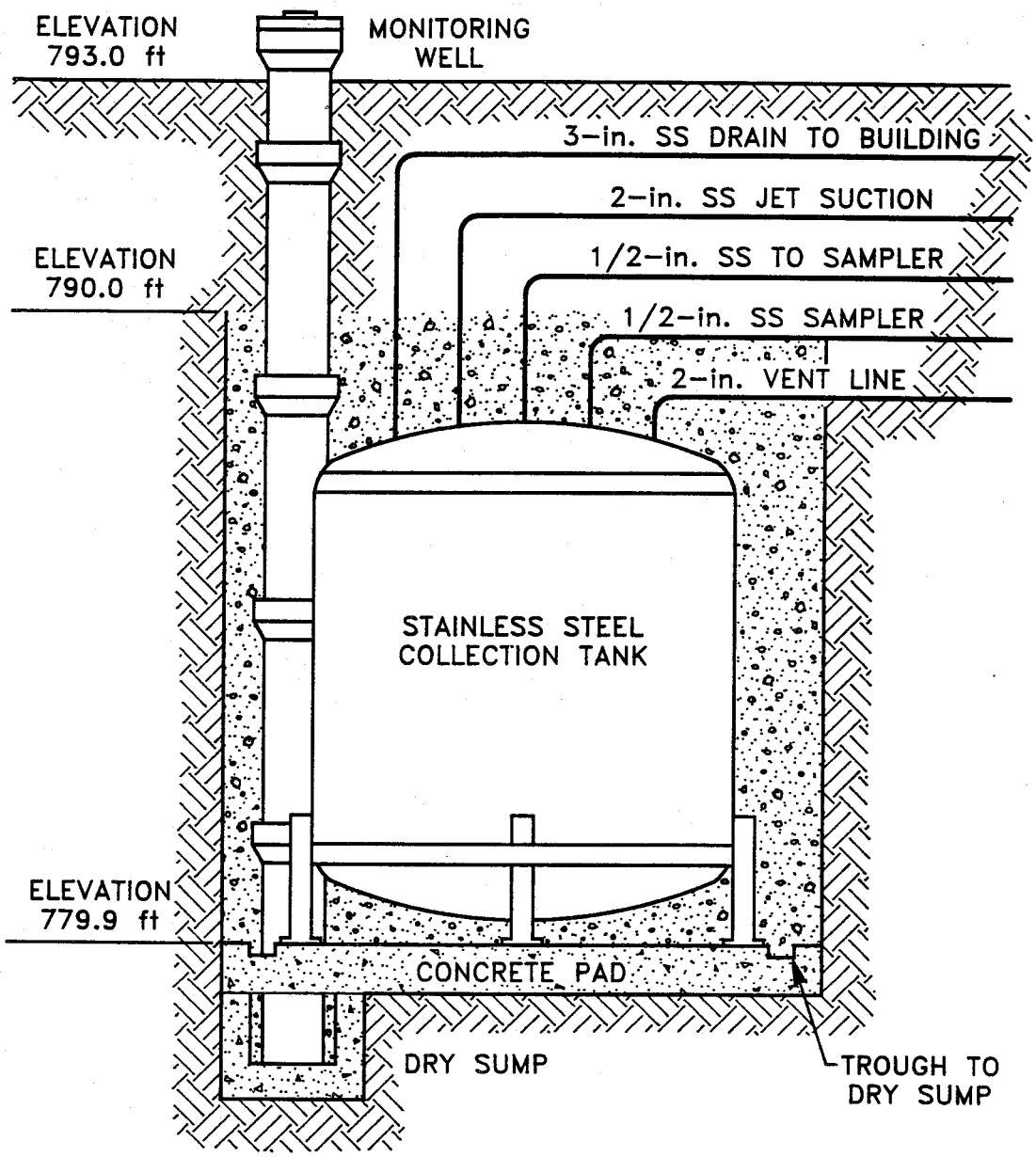

Fig. 4. Typical low-level waste collection tank.

3.2 LLLW EVAPORATOR FACILITY

LLLW solutions that accumulate in the collection tanks are periodically transferred to the evaporator service tank W-22 and then fed to evaporators A2 and 2A2, where the evaporation of the radioactive waste solution is accomplished. The two evaporators are operated in a semicontinuous manner. Dilute LLLW is transferred by steam jet from feed tank W-22 to the evaporator as necessary to maintain a minimum level. The waste is concentrated to a target specific gravity of approximately 1.25. The evaporator condensate, which contains trace amounts of radionuclides, is directed to the PWTP.

When the evaporator bottoms or concentrated waste reaches a specific gravity of about 1.25, or when there is no feed left to process, the evaporator is shut down, the contents cooled, and then the "concentrate" is jetted to one of the 11 storage tanks that are discussed in more detail in Chap. 5.

The transfer of the concentrate from the evaporator facility to the storage tanks is done through a doubly-contained stainless steel line that is cathodically protected and buried in a bed of specially prepared clay. The transfer route to the Melton Valley area (where the storage tanks are located) is shown in Fig. 5.

3.3 LLLW EVAPORATOR FACILITY COMPLEX

The Radioactive Waste Evaporator Facility (Bldg. 2531) shown in the plan view of Fig. 6 includes the following major areas:

1. Stainless-steel-lined vaults containing the evaporator feed tank W-22, the converted evaporator feed tank W-21 (now a storage tank for concentrated liquid waste, primarily that waste generated by the PWTP), the concentrate storage tank W-23, and associated pumps, pipes, and controls.
2. Underground pipe trench, for the transfer of liquid waste from the feed tank to the evaporator.

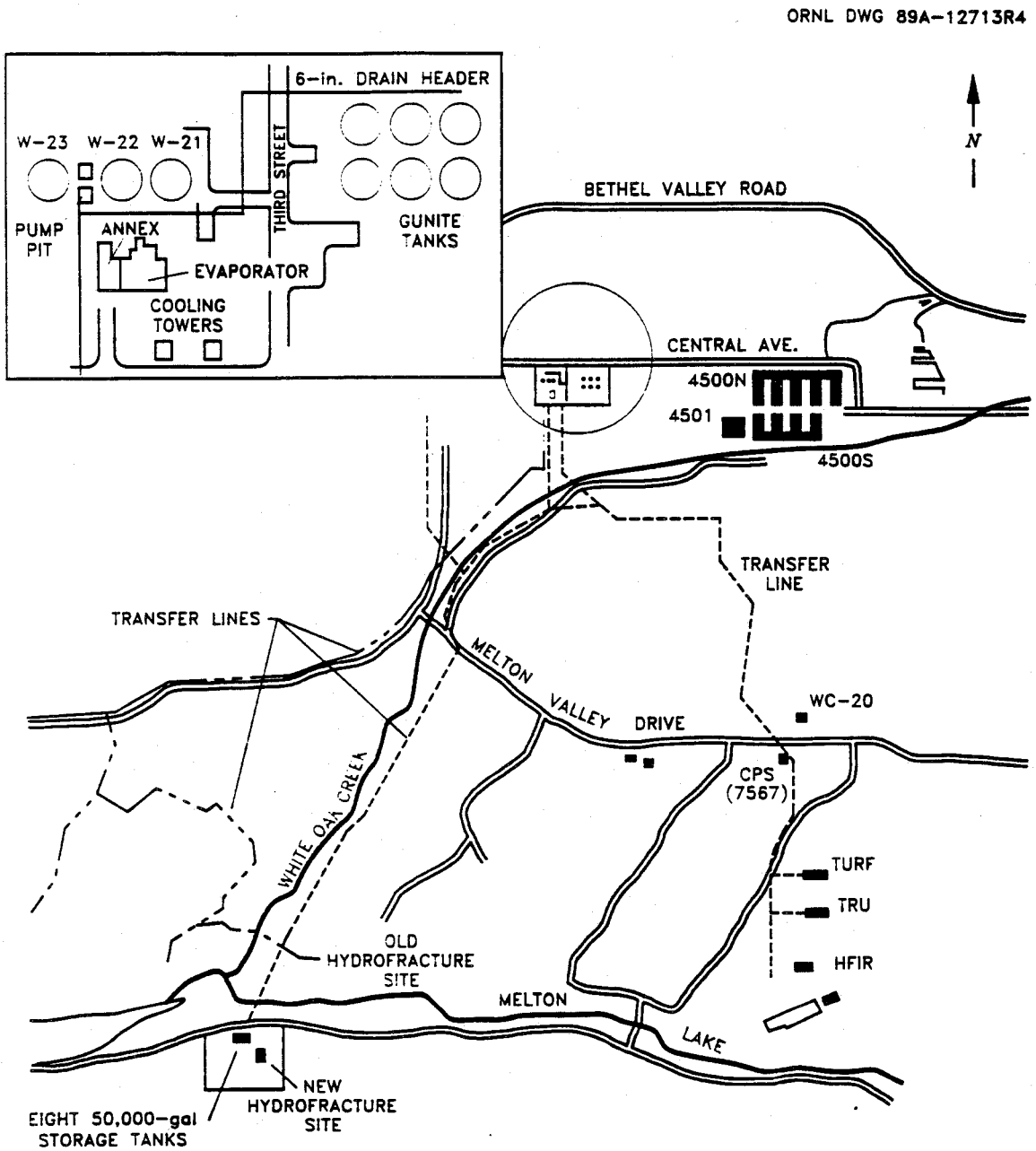

Fig. 5. Underground LLLW transfer line between Bethel Valley and Melton Valley.

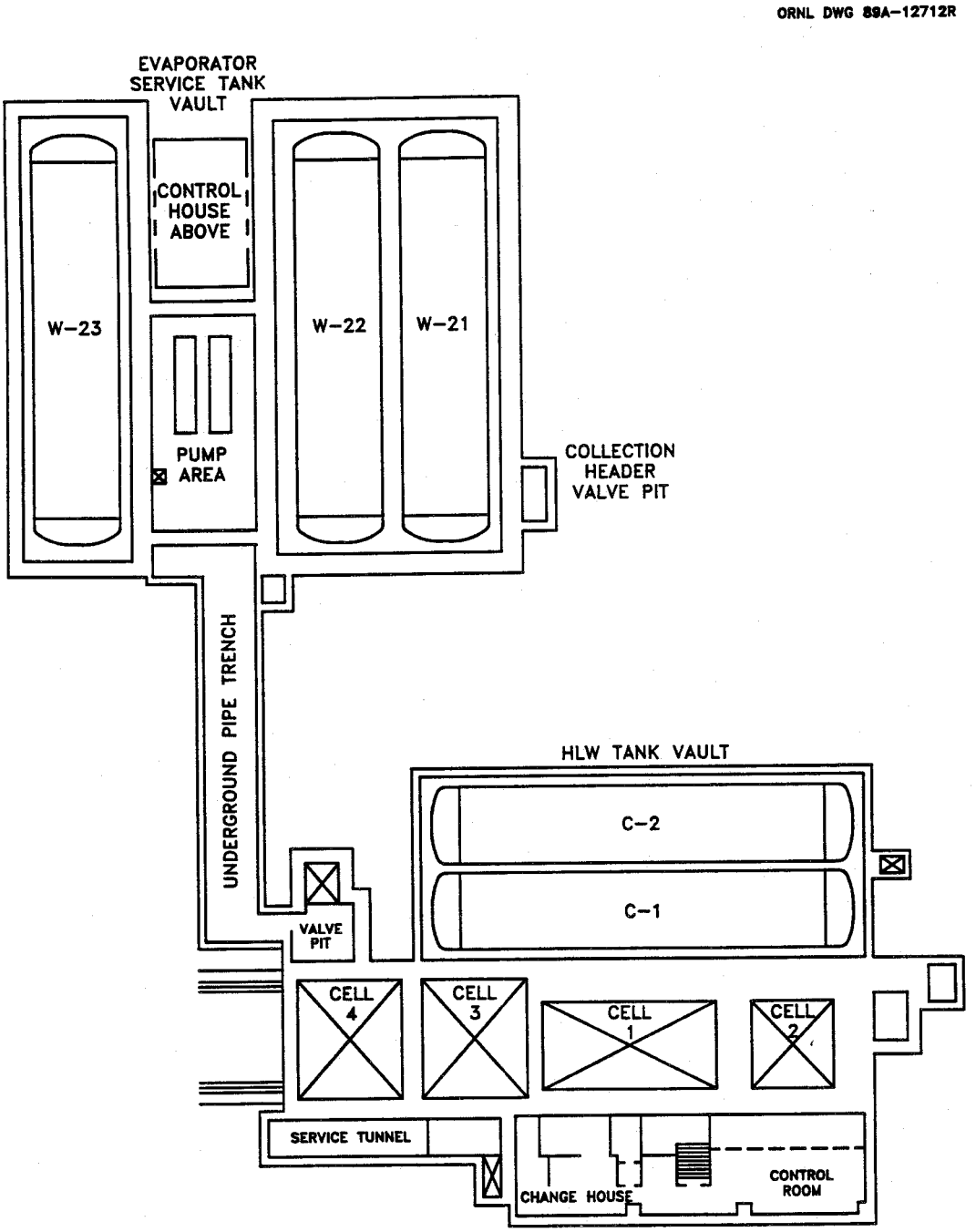

Fig. 6. Plan view of the Radioactive Waste Evaporator Facility (Bldg. 2531).

3. The high-level waste (HLW) tank vault containing tanks C-1 and C-2, which are now storage tanks for concentrated waste from the evaporator.
4. Cells 1 through 4 in Building 2531 contain the evaporators and associated equipment. Cell 1 contains the original evaporator A-2 and its feed tank, A-1. Cell 2 contains the evaporator's (A-2's) accompanying process equipment: condenser, vapor filter, condensate catch tank, off-gas scrubber, emergency condenser, and scrub liquor tank. Cell 4 holds evaporator 2A-2, and Cell 3 contains the condensate filter, evaporator condenser, condensate surge tank, off-gas scrubber, and the scrub liquor tank for evaporator 2A-2. Also in the building are the control room and service tunnel.

The first evaporator, A-2, was installed and started operation in 1965, while the second evaporator, 2A-2, which was built identically to A-2, was installed in the evaporator annex in 1978. The evaporators have a boil-up rate of ~50 lb/h per square foot of boiling surface. Both evaporators are designed to operate at a rate of 600 gal/h and are capable of automatic operation except for startup and shutdown. This allows for the evaporators to operate without supervisory personnel present in Building 2531. Automatic alarms triggered by abnormal operating conditions will alert operating personnel in the WOCC, Building 3130, and will cause a shutdown of the evaporator until the alarm condition is corrected by operating personnel.

The evaporator coils, designed for heating or cooling and located in the bottom of the evaporator, are operated at a steam pressure of 35 psig. In both evaporators, a coil is located above the normal liquid level and acts as a foam breaker. Spray nozzles are located near the top of the evaporation tanks for spraying antifoaming agents, and three other spray nozzles provide decontamination solutions to the evaporators.

An impingement-type deentrainer is installed in the top head of the evaporator to ensure that the condensate from the evaporator has a very low level of radioactivity. The deentrained material is carried by a drain back below the surface of the boiling waste. Thus a decontamination factor of between 10,000 and 100,000 is accomplished between the evaporator feed and the vapor leaving the evaporator.

Interlocks and control circuits for both evaporators provide automatic control and dictate that the ventilation system must be operating properly, cooling water must be flowing to the condenser, all radiation monitors must be operating at or below their

alarm levels, and the condensate sample pump must be operating for continued operation of the evaporator unit.

A spare evaporator vessel was constructed in 1965 and is also identical to unit A-2. This evaporator is presently in storage and is tested periodically to ensure its integrity. The spare evaporator is kept ready in case A-2 or 2A-2 should ever need replacing.

3.4 LLLW CONCENTRATE STORAGE TANKS

ORNL has 12 50,000-gal-capacity tanks for the storage of LLLW concentrate. Eight of these tanks, known as the MVSTs, are located on the new Hydrofracture site in an underground, concrete, stainless-steel-lined vault. The other four storage tanks, located near the evaporator facility, are C-1, C-2, W-23, and W-21. Both C-1 and C-2 were originally built to hold HLW, but because HLW is not generated at ORNL, they were repiped to receive LLLW concentrate. Tank W-21, originally a feed tank for the LLLW evaporator, was converted to a tank for storage of concentrate produced by the PWTP in an effort to decouple the PWTP and LLLW operations. Currently, tank W-22 serves as the sole evaporator feed tank. Tank W-23 receives concentrate directly from the evaporator. It is normally used as a collection point for LLLW concentrate before it is transferred to the MVSTs for storage.

4. LLLW SOURCES AND GENERATION

As mentioned briefly in Chap. 3, several facilities contribute to the generation of LLLW. The radioactive liquid waste generated at the Laboratory can be broken down into several types of waste: (1) those wastes that result from air and water treatment facility operations, (2) those wastes that result from decontamination of hot cells and various areas, and (3) waste generated by research and development (R&D) activities. Of these types of LLLW, air and water treatment facility operations have accounted for ~34% of the LLLW wastes generated since 1986. Decontamination activities have generated about 45% of the waste, and other activities, including R&D activities and rainwater infiltration, account for the other 21%. Contributions of rainfall to the LLLW system are discussed further in Sect. 4.2.

Table 3 gives a list of those divisions which produce LLLW and corresponding approximate percentages of LLLW generated between 1986 and 1989. As seen in the table, the Chemical Technology Division is the largest producer of LLLW, accounting for almost half of the LLLW generated. Most of these wastes are generated by decontamination activities involving isotope production. The second largest division generator, at 27%, is the E&HP Division. These wastes consist mainly of air and water treatment residual liquids, those from the PWTP and the COG stack, as well as several small off-gas facilities. Research Reactors Division produced about 23% of the LLLW generated during these years.

4.1 LLLW GENERATORS

As mentioned in Chap. 2, the ORNL LLLW system is used to collect, neutralize, concentrate, and store radioactive waste solutions. Annual summaries of the monthly LLLW collected from specific generators are contained in Tables 4–8. Table 4 summarizes collections of LLLW over the period of January 1986 to June 1989, and Tables 5, 6, 7, and 8 summarize monthly LLLW generation rates from 1986, 1987, 1988, and 1989 respectively. As the data in these tables demonstrate, relatively few generators are responsible for the generation of most of the LLLW collected at ORNL since 1986. The primary generators are the Isotopes Area (16%), the 3039 stack area (11%), the HFIR (11%), the ORR and the BSR (10%), the Fission Products Development Laboratory (FPDL) (10%), the High Radiation Level Experimentation Laboratory (9%), the 4500 complex (8%), the Radiochemical Engineering Development Center (REDC) (4%), Building 3019 (3%), and the PWTP spent acid stream (3%). Descriptions of the activities of specific large LLLW generators follow in the next few sections. Two important LLLW generators will not be described in any detail in this chapter; they are Building 3019, which is expected to be only a minor LLLW generator in the future, and tank W-1A, which is an inactive tank and collects only rainwater.

Table 3. Division's contributions to dilute LLLW generation, 1986–1989

Division	Average percentage of dilute LLLW generation for 1986–1989
Analytical Chemistry	1
Chemistry	< 1
Chemical Technology	47
Environmental & Health Protection	27
Environmental Sciences	< 1
Health and Safety Research	< 1
Metals and Ceramics	< 1
Plant and Equipment	< 1
Research Reactors	23

Table 4. Average monthly dilute LLLW generation (for period January 1986–June 1989)

Generator	Monthly generation (gal)	Percent of total
Isotopes[a]	5,061	16
High Flux Isotope Reactor	3,890	13
3039 stack area	3,552	11
Reactors[b]	3,210	10
Bldg. 3517	3,120	10
Bldg. 3525	2,615	8
4500 complex	2,609	8
Tank W-1A	2,319	8
Bldg. 7920	1,370	4
Bldg. 3019	1,061	4
PWTP spent acid	999	3
Tank WC-8 pump pit	545	2
All others	835	3
Total	**31,186**	

[a]Isotopes include all collections from Isotopes Area collection tanks WC-10 and WC-2, Bldg. 3026C collection tanks W-17 and W-18, and Bldg. 3026D collection tank W-16.

[b]Reactors include the Oak Ridge Research Reactor (ORR), the Old Graphite Reactor (OGR), and the Bulk Shielding Reactor (BSR).

Table 5. Average monthly dilute LLLW generation for 1986

Generator	Monthly generation (gal)	Percent of total
Isotopes[a]	7,466	17
Reactors[b]	5,455	13
High Flux Isotope Reactor	5,370	12
4500 complex	5,110	12
Bldg. 3517	4,629	11
Bldg. 3525	3,770	9
3039 stack area	3,480	8
PWTP spent acid	2,130	5
Tank W-1A	1,720	4
Bldg. 7920	1,608	4
Bldg. 3019	1,151	3
Tank WC-8 pump pit	534	1
All others	703	2
Total	43,126	

[a]Isotopes include all collections from Isotopes Area collection tanks WC-10 and WC-2, Bldg. 3026C collection tanks W-17 and W-18, and Bldg. 3026D collection tank W-16.

[b]Reactors include the ORR, the OGR, and the BSR.

Table 6. Average monthly dilute LLLW generation for 1987

Generator	Monthly generation (gal)	Percent of total
Isotopes[a]	3,779	14
Reactors[b]	3,601	13
3039 stack area	3,539	13
Bldg. 3517	3,362	12
High Flux Isotope Reactor	2,620	10
4500 complex	2,419	9
Bldg. 3019	2,172	8
Bldg. 3525	1,830	7
Bldg. 7920	1,188	4
Tank W-1A	1,004	4
PWTP spent acid	592	2
Bldg. 3503 and off-gas drain	457	2
All others	825	2
Total	**25,216**	

[a]Isotopes include all collections from Isotopes Area collection tanks WC-10 and WC-2, Bldg. 3026C collection tanks W-17 and W-18, and Bldg. 3026D collection tank W-16.

[b]Reactors include the ORR, the OGR, and the BSR.

Table 7. Average monthly dilute LLLW generation for 1988

Generator	Monthly generation (gal)	Percent of total
Isotopes[a]	3,766	16
3039 Stack area	3,275	14
Bldg. 3517	3,150	13
High Flux Isotope Reactor	2,996	12
Bldg. 3525	1,857	8
Bldg. 7920	1,742	7
4500 complex	1,605	7
Reactors[b]	1,378	6
Tank W-1A	1,161	5
Bldg. 3019	899	4
PWTP spent acid	652	3
Tank WC-8 pump pit	537	2
All others	1,064	3
Total	**24,082**	

[a]Isotopes include all collections from Isotopes Area collection tanks WC-10 and WC-2, Bldg. 3026C collection tanks W-17 and W-18, and Bldg. 3026D collection tank W-16.

[b]Reactors include the ORR, the OGR, and the BSR.

Table 8. Average monthly dilute LLLW generation for 1989

Generator	Monthly generation (gal)	Percent of total
Tank W-1A	5,394	18
Isotopes[a]	5,232	17
HFIR	4,572	15
3039 stack area	3,914	13
Bldg. 3525	3,004	10
Reactors	2,405	8
Bldg. 3517	1,337	4
4500 complex	1,302	4
Bldg. 7920	941	3
Tank WC-8 pump pit	816	3
PWTP spent acid	620	2
Bldg. 3019	23	<1
All others	1,064	3
Total	30,624	

[a]Isotopes include all collections from Isotopes Area collection tanks WC-10 and WC-2, Bldg. 3026C collection tanks W-17 and W-18, and Bldg. 3026D collection tank W-16.

[b]Reactors include the ORR, the OGR, and the BSR.

4.1.1 Isotopes Area

The isotope facilities' primary tasks are producing, purifying, and distributing various radionuclides. A very wide range of radioisotopes is handled, and activities include tritium processing, ^{85}Kr separation, short-lived fission products processing, ^{137}Cs and ^{90}Sr source fabrication, ^{60}Co storage and irradiation, ^{99}Tc processing, and some transuranic isotope processing.

As seen in Table 4, LLLW collections from the Isotopes Area have accounted for 16% (5061 gal/month) of the total LLLW collections since 1986. LLLW generation from the Isotopes Area decreased dramatically from 1986 (7466 gal/month) to 1987 (3779 gal/month), but since 1987 the level of LLLW generation has remained at ~3800 gal/month. However, through the first half of 1989, LLLW generation increased to 5232 gal/month because of above average rainfall (and therefore inleakage) into tanks W-17 and W-18. Collection tanks in the Isotopes Area include WC-2, WC-10, W-16, W-17, and W-18.

While the Isotopes Area is primarily production oriented, very little LLLW is generated as a direct result of processing activities. Most of the waste production is a result of routine and nonroutine hot cell decontamination. The primary nuclides expected to be in the waste streams generated from these facilities are ^{137}Cs, ^{90}Sr, and ^{131}I. However, smaller quantities of many other nuclides can also be expected to be present in the waste stream. A list of these other nuclides and the estimated quantity of each is given in Table 9. Also presented in Table 9 is a list of the contaminants in the Isotopes Area waste stream and their respective estimated quantities.

4.1.2 3039 Stack Area

Process off-gas streams generated within processes or R&D equipment are vented to the COG collection system (3039 stack) for the removal of radioactive iodine. The off-gases potentially contain other radioactive species, flammable vapors, and toxic vapors. After collection, the gases are scrubbed with a 0.5% caustic (NaOH) solution, passed through a high-efficiency particulate air (HEPA) filter, and then discharged. The scrubbing operation produces a spent caustic solution that is slightly contaminated. This caustic solution is transferred to the LLLW system for treatment. The 3039 stack

Table 9. Annual LLLW stream components for the Isotopes Area

Nuclide	Annual quantity (Ci)	Other stream component	Annual quantity (kg)[a]
Ag-110*m*	0.8	AHIB (organic acid)	1
Am-241	Trace	Ammonium hydroxide	2
Am-243	Trace	Citric acid	11
Cf-252	Trace	Hydrochloric acid	2
Cm-244	Trace	Methyl isobutyl ketone	1
Co-56	Trace	Nitric acid	104
Co-60	3	Oxalic acid	33
Cs-137	30	Potassium hydroxide	2
Eu-152	Trace	Potassium permanganate	27
Eu-154	Trace	Sodium hydroxide	4
Fe-55	Trace	Sulfurous acid	90
Fe-59	Trace	Detergents	210
Gd-153	Trace		
H-3	1.2E-4		
I-125	1.2E-3		
I-129	3		
Ir-192	Trace		
Mn-54	Trace		
Ni-63	Trace		
Pm-147	3		
Pu-238	Trace		
Pu-239	Trace		
Sr-90	30		
Tc-99	3		
U-234	Trace		
U-235	Trace		
W-188	1.2E-3		

[a]For purposes of this report, "other stream component" quantities are considered to be 1 kg when estimated quantities are less than 1 kg. All others are rounded to the nearest kilogram.

area produces ~3600 gal per month of dilute LLLW, which accounts for ~11% of the total volume of dilute LLLW collected since 1986.

Past sampling data show that the LLLW stream produced at the 3039 stack area is quite dilute. Assuming that the LLLW evaporator concentrates the dilute LLLW to a specific gravity of 1.25 g/mL, this stream contributes <50 gal/month to the LLLW concentrate stream.

4.1.3 High Flux Isotopes Reactor

LLLW collected from the HFIR is generated primarily from the following sources: (1) regeneration and backwashing of primary and pool demineralization systems, (2) waste from sampling, (3) head tank overflow, (4) gaseous waste filter pit, (5) 7911 stack drainage, and (6) the off-gas condensate collection pit.[1] An analysis of the primary demineralizer LLLW stream is summarized by Pretez.[2] The LLLW generation rate in 1986 was ~5370 gal/month. Since the HFIR shut down, the LLLW generation rate has fallen to ~280 gal/month. The restart of HFIR in 1989 has increased the LLLW generation to ~4600 gal/month at that facility.

The most significant LLLW generation source at HFIR is the regeneration and backwashing of the primary and pool demineralization systems. These regeneration solutions account for ~20,000 gal of dilute LLLW annually and also represent the primary source of ^{60}Co at ORNL.[1]

4.1.4 Oak Ridge Reactor/Bulk Shielding Reactor/Old Graphite Reactor

The ORR was shut down permanently in 1987 and will not be restarted. Current and future LLLW generated at the ORR is the result of decontamination and decommissioning activities, as well as regeneration of the demineralizer columns. Similarly, ongoing maintenance and decommissioning activities require the regeneration of demineralizers at the OGR.

The BSR is expected to continue operation. Sources of LLLW from the BSR are cooling water and ion-exchange column spent regeneration solutions.

The monthly LLLW generation from these facilities has averaged ~3200 gal/month since 1986, falling from a level of 5500 gal/month in 1986 to a level of ~1400

gal/month in 1988. Much of the decrease is due to the shutdown of the ORR and relatively light rainfall in 1987 and 1988. With increased rainfall during the first half of 1989, generation rates have increased to 2400 gal/month. More discussion pertaining to the influence of rainfall into collection tank WC-19 will follow in Sect. 4.2.

The LLLW stream from each of these facilities can be described as a stream primarily resulting from the regeneration of demineralizer systems. As such, each of the individual waste streams comprise weak acid and base solutions. It is estimated that a total of 460 gal of 5% nitric acid, 110 gal of 5% sulfuric acid, and 575 gal of 5% sodium hydroxide are expended annually by these facilities. The total waste stream from these facilities is also estimated to contain as much as 3 Ci/year ^{106}Ru and trace amounts of such nuclides as ^{60}Co, ^{137}Cs, ^{54}Mn, ^{226}Ra, and ^{90}Sr.

4.1.5 Fission Products Development Laboratory

The FPDL (Bldg. 3517) processes large quantities of ^{137}Cs (~350,000 Ci/year) and ^{90}Sr (~500,000 Ci/year). Other materials that are occasionally processed at Bldg. 3517 are ^{60}Co and ^{192}Ir. Materials that have been handled in the past include ^{144}Ce and ^{147}Pm.

Building 3517 is the primary source of both cesium and strontium in the LLLW system. Estimated losses of each material are on the order of 5,000–15,000 Ci/year. The building activities that produce LLLW are not directly related to isotope processing but are derived primarily from routine decontamination of the hot cells used in cesium and strontium purification. In addition to the nuclides released to the LLLW system, this routine decontamination also results in the addition of 16*M* nitric acid (500 gal/year), oxalic acid (500 lb/year), 50% sodium hydroxide (300 lb/year), Turco Decon 4502 (500 lb/year), and various detergents to the LLLW system.

The LLLW production since 1986 has averaged ~3100 gal/month, but the level has decreased substantially during the time period from 1986 to 1989. In fact, the LLLW production rate in 1986 was ~4600 gal/month, and by 1988 that production rate had fallen to 3150 gal/month. Shutdown of the facility in early 1989 has resulted in even smaller volumes of LLLW (1337 gal/mon) being sent to the LLLW system thus far in 1989. Recently, improvements have been made to the building's underground

tank vault, which has reduced groundwater inleakage, and consequently the LLLW generation rates are expected to decrease even further.

4.1.6 High Radiation Level Examination Laboratory

The High Radiation Level Examination Laboratory (HRLEL) (Bldg. 3525) primarily serves as an area where irradiated metallurgical specimens can be examined. The area possesses both hot cells and storage wells for containment of radioactive materials. Currently, the facility is expected to handle a variety of radionuclides, including ^{137}Cs, and uranium, plutonium, and thorium isotopes. It is estimated that 50 Ci/year of ^{137}Cs and trace quantities of the various uranium, plutonium, and thorium isotopes escape to the LLLW system via collection and transfer tank W-12. As is the case for other isotope areas, LLLW in this facility is mainly generated as a result of routine decontamination. In addition to the above-mentioned isotopes, sulfurous acid (450 lb/year), 15*M* sodium hydroxide (5 gal/year), 5*M* nitric acid (5 gal/year), and detergents used in decontamination activities contribute to the LLLW.

The average monthly LLLW generation rate since 1986 has been ~2600 gal. The LLLW generation rate decreased from a 1986 generation rate of 3770 gal/month to a rate of 1850 gal/month in 1988. In 1989, the LLLW generation rate increased as expected to ~3000 gal/month because of nonroutine hot cell revitalization/ decontamination activities.

4.1.7 4500 Complex

The 4500 complex (Bldgs. 4500N, 4500S, 4501, 4505, 4507, and 4508) is a multipurpose research facility. There is a large variation in the radioactive materials that are handled in the complex, and small quantities of any radionuclide that is used at the laboratory could be disposed of from one of many active hot drains in the facility. There are approximately 89 active hot drains in the 4500 complex, each draining to one of four collection tanks (WC-11, WC-12, WC-13, and WC-14).

The 4500 complex has historically accounted for between 7 and 8% of all dilute LLLW collected at ORNL. Since 1986, the average LLLW generation rate has been

~2600 gal/month. As seen in Tables 5–8, however, the monthly LLLW generation rate has decreased from ~5110 gal/month in 1986 to only 1300 gal/month for the first 6 months in 1989.

As previously mentioned, small quantities of many radionuclides could be expected to be present in the 4500 complex waste stream. A summary of these nuclides and their estimated quantities is given in Table 10. As to be expected with a multipurpose research facility, the 4500 area also releases small amounts of common acids, bases, detergents, and other chemical agents used in various laboratory procedures to the LLLW system. A list of these other LLLW stream components is provided in Table 10 as well.

4.1.8 Radiochemical Engineering Development Center

The REDC recovers a variety of radiochemicals produced by irradiation of selected targets. The REDC has consistently produced ~1400 gal/month of LLLW since 1986. The LLLW is primarily generated from disposal of spent off-gas scrubber solutions. The scrubber solutions are typically of low activity. Small volumes of waste are generated as a direct result of isotope processing from operations conducted at the REDC facility. These wastes are sent to the LLLW system and are a major contributor to the transuranic and fission product isotopes that are collected in the system. Table 11 summarizes the radioactive and nonradioactive components that are released to the LLLW system from the REDC.

4.1.9 Overall System Collection Rates

Table 12 summarizes the total LLLW collections from all generators for years 1986 through 1989. As of 1988, the LLLW collections had declined by ~44% since 1986. With the exception of LLLW generations from the REDC facility and the 3039 stack area, all generators seem to have substantially decreased their LLLW generation rates. The reason for this decline is in part the result of waste reduction programs spurred by institution of a charge-back plan started at ORNL in 1986. Other factors influencing the decline in LLLW generation are the lower yearly rainfalls since 1986, the shutdown in 1986 of the HFIR, decommissioning of the ORR, and improvements

Table 10. Annual LLLW stream components for the 4500 complex

Nuclide	Annual quantity (Ci)	Other stream component	Annual quantity (kg)[a]
Am-241	Trace	Ammonium hydroxide	1
Am-243	Trace	Hydrochloric acid	1
C-14	Trace	Methanol	1
Co-58	Trace	Nitric acid	50
Co-60	1.1E-2	Sodium hydroxide	1
Cs-134	6.0E-2	Sulfuric acid	2
Cs-137	0.7	Detergents	4
Eu-152	Trace	Acetone	4
Eu-154	Trace	Hydrofluoric acid	1
Fe-59	Trace	Potassium dichromate	50
H-3	1.2E-4		
Mn-54	Trace		
Pu-238	Trace		
Pu-239	Trace		
Pu-242	Trace		
Ra-226	Trace		
Sr-89	Trace		
Sr-90	Trace		
Tc-95*m*	Trace		
Tc-99	Trace		
Th-232	2.2E-6		
U-233	Trace		
U-238	3.4E-5		

[a]For purposes of this report, "other stream component" quantities are considered to be 1 kg when estimated quantities are less than 1 kg. All others are rounded to the nearest kilogram.

in the operation of the PWTP. One result that can be gleaned from study of the data in Table 12 is that projected LLLW collections in 1989 are about 14% greater than the actual collections in 1988. This increase in LLLW collections may be because of increased fugitive inleakage related to higher rainfall levels to date in 1989 (1.6 in./week average) compared to that in 1988 (0.83 in./week); however, the absolute amount of the LLLW generation increase that can be attributed to increased rainfall in 1989 is uncertain. Rainfall infiltration into the LLLW CAT System is covered in more detail in the next section.

Table 11. Annual LLLW stream components for the REDC

Nuclide	Annual quantity (Ci)	Other stream component	Annual quantity (kg)[a]
Am-241	1.7	Acidified butyrates	1
Am-242	Trace	Adogen-hydrochloric acid	24
Am-243	0.1	AMSCO (petroleum	768
Cf-252	0.8	naphtha)	1
Cm-244	78.2	2,5-Dibutylhydroquinone	24
Cm-246	0.2	Diisoprophylbenzene	48
Mixed fission products	42,000	(DIPB)	151
Mixed plutonium	0.5	2-Ethylhexanol	146
Other californium	Trace	HDEHP extractant	123
Other curium	Trace	Hydrochloric acid	1
		Lithium chloride	3
		Lithium nitrate	1
		Mercury (II) nitrate	9686
		Nitric acid	2089
		Potassium carbonate	115
		Potassium hydroxide	284
		Sodium aluminate	1
		Sodium hydroxide	
		Sodium thiosulfate	

[a]For purposes of this report, "other stream component" quantities are considered to be 1 kg when estimated quantities are less than 1 kg. All others are rounded to the nearest kilogram.

Table 12. Summary of annual LLLW production rates

Year	LLLW generation (gal)	Change from previous year (%)
1986	517,505	
1987	328,638	−36.5
1988	288,961	−12.0
1989[a]	329,243	13.9

[a]1989 LLLW generation rate is projected from actual LLLW collections as of June 1989.

4.2 RAINFALL INLEAKAGE INTO THE LLLW SYSTEM

Inleakage of rainfall into the LLLW system has been qualitatively recognized for some time; however, a quantitative estimate of the effects of rainfall on the volume of LLLW collected at ORNL has not been made. It was the objective of this work to derive a quantitative relationship between rainfall levels and LLLW collections and to determine which of the tanks in the LLLW system were affected by rainfall and to what extent. The data necessary to perform this analysis, the weekly LLLW generation rates and weekly rainfall amounts, were obtained from the Liquid and Gaseous Waste Operations Group of the E&HP Division and from the Plant and Equipment Division respectively.

A plot of LLLW collections as a function of rainfall is shown in Fig. 7. It is obvious from Fig. 7 that there is a high degree of scatter to the data. However, if the rainfall data are plotted in a time-ordered plot with LLLW collections as in Fig. 8, there appears to be a relationship between weekly rainfall and weekly LLLW collection rates. Therefore, it was determined that a time series analysis was an appropriate approach to determine which tanks were, in fact, collecting rainwater and to derive a rough estimate of how much LLLW is created by a given amount of rain.

The time series analysis identified LLLW collections in the following tanks to be significantly influenced by rainfall: WC-19, W-1A, WC-11, WC-12, Bldg. 3517 tanks, WC-8, WC-5 and -6, and WC-17 and -18. A very approximate estimate of LLLW collected (in gallons) from each of these tanks per inch of rainfall is 223, 644, 93, 30, 138, 47, 28, and 260 respectively. These data imply that for each inch of rainfall, there are ~1500 gal of LLLW collected from the above tanks. It must be emphasized that all of these projections of LLLW generation as a function of rainfall are only approximations, and care must be taken when interpreting these results.

5. CONCENTRATE GENERATION

LLLW concentrate is the resulting evaporator bottoms when the dilute LLLW is evaporated. The condensate liquid is sent to the PWTP for further treatment. Hydrofracture was used as a means of disposing of LLLW concentrate for several years

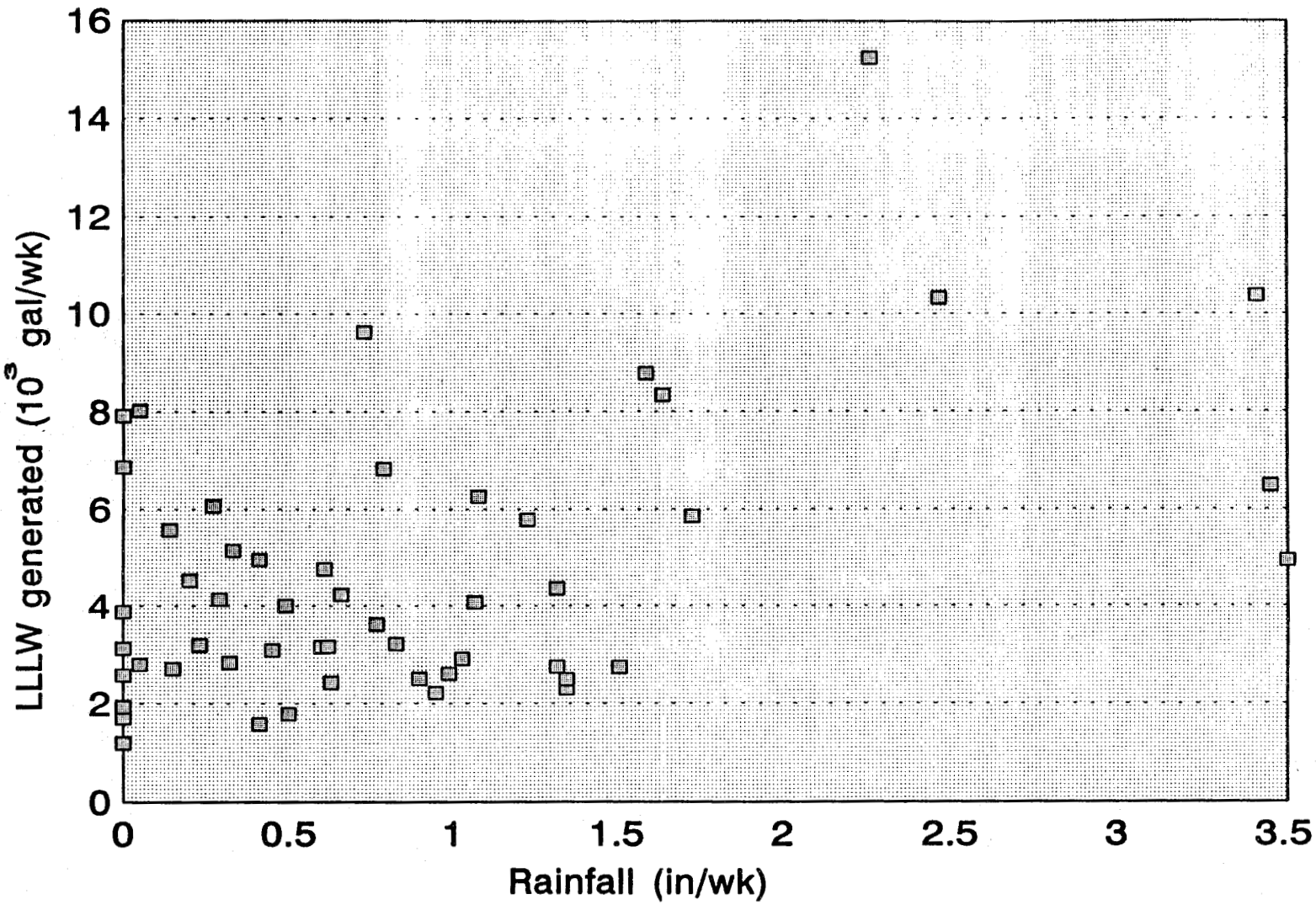

Fig. 7. LLLW generation plotted as a function of rainfall for CY 1988.

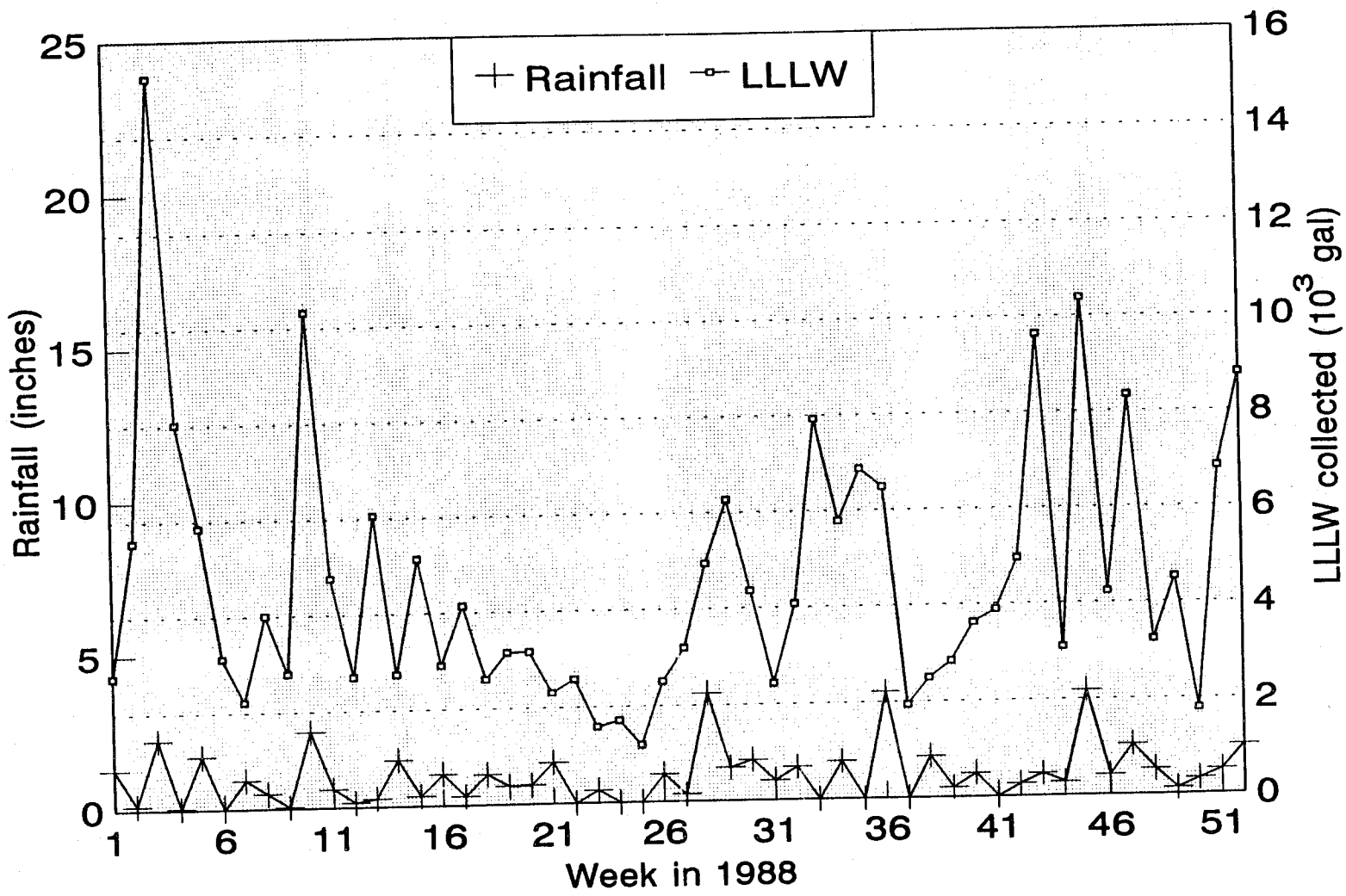

Fig. 8. Time-ordered plot of LLLW and rainfall collected during CY 1988.

in the early 1980s but was discontinued and is no longer considered a viable disposal option. Currently, LLLW concentrate is being accumulated and stored. The capacities of the storage tanks and the LLLW concentrate volumes as of mid-1989 are shown in Table 13.

Figure 9 shows the decrease of available storage space for LLLW concentrate since 1986. The decrease in cumulative concentrate stored during 1988 is the result of the Emergency Avoidance Solidification Campaign (EASC) freeing about 47,000 gal of tank space. In the EASC this LLLW concentrate was solidified in a grout mixture, and the solid waste forms are now in interim storage. The EASC is discussed in detail in Sect. 5.1.

The rate of concentrate generation per year since 1986 is seen in Table 14. The concentrate generation rate is expected to increase in the next several years for the following facilities and programs: (1) decontamination of facilities and hot cells, (2) Remedial Action Programs' decommissioning and decontamination of inactive tanks, and (3) the HFIR restart.

5.1 SOLIDIFICATION OF LLLW CONCENTRATE

The first solidification campaign, the EASC, in which 47,000 gal of LLLW concentrate were immobilized in a cement-based matrix, was completed at the end of CY 1988. The solidification was done by L&N Technologies, a contracted vendor. L&N proposed a grout mixture that, when solidified with the LLLW supernatant from MVSTs W-29 and W-30, would pass the leachability tests. They provided the grout mixture, the equipment necessary to mix the LLLW with the grout mixture, and thepersonnel who performed the solidification. Once the waste was solidified, the forms were placed in interim storage on an open concrete diked pad in the Melton Valley area.

Table 13. Liquid low-level waste concentrate tank volumes and capacities

Tank	Capacity (gal)	Volume of waste (gal)[a]
C-1	50,000	10,140
C-2	50,000	45,260
W-21	50,000	16,570
W-23	50,000	34,020
W-24	50,000	44,510
W-25	50,000	30,400
W-26	50,000	33,860
W-27	50,000	45,640
W-28	50,000	46,330
W-29	50,000	46,870
W-30	50,000	46,830
W-31	50,000	46,610
Total		**447,040**

[a]Liquid low-level waste concentrate volumes are as of June 1, 1989.

5.2 IN-TANK EVAPORATION

A procedure known as in-tank evaporation (ITE) will be performed on the MVSTs to reduce the amount of liquid waste stored. Each of the eight storage tanks has a tank ventilation system for purging gases from the tanks, as well as submersed air sparges used to mix the contents of the tanks. In the ITE schema, unsaturated (or possibly dry) air will be introduced into the tanks and will theoretically leave the tanks saturated with water. Several studies have been completed to determine the viability of ITE and its effect on the availability of storage volumes.[3] As determined by these studies, ITE will free ~3000 gal/year per tank. This rate was based on the following assumptions: (1) 80% on-line time for the operation, (2) saturation temperature of 50°F, (3) bone-dry input air to the tanks, and (4) 100% saturated outlet air. At a

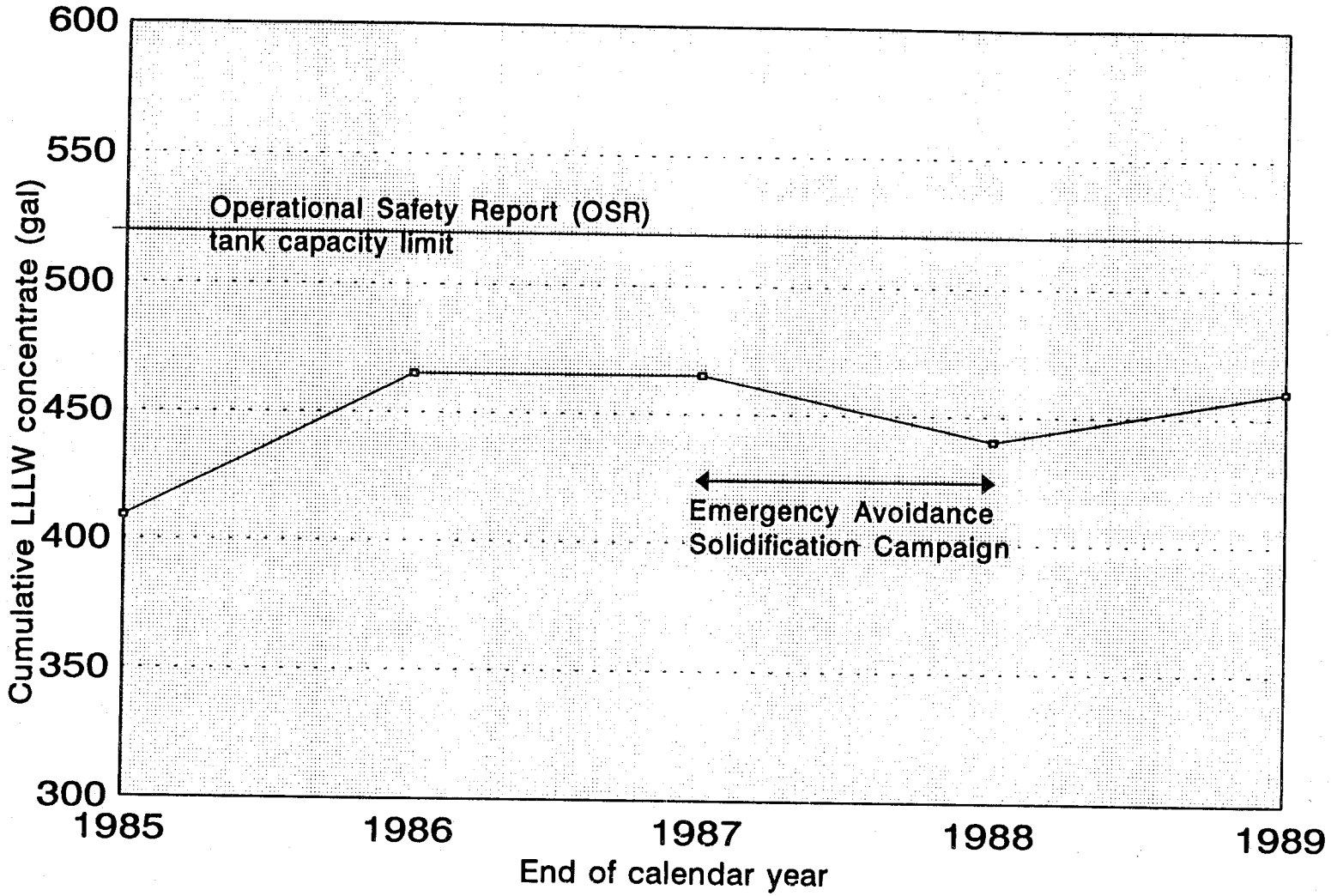

Fig. 9. LLLW concentrate storage volume occupied over time period 1985–1989.

saturation temperature of 90°F, this liquid evaporation rate increases to about 10,000 gal/year per tank with the same assumptions.[3]

ITE is scheduled to begin in FY 1990. Various stages of development work will be implemented, and full-scale evaporation will not occur until about 1 year later. This evaporation process is expected to continue until the supernates in the tanks reach saturation of sodium nitrate.

Table 14. LLLW concentrate generation, 1986–1990

Year	LLLW concentrate generation (gal)
1986	34,132
1987	22,036
1988	26,863
1989	10,059
1990	16,140

5.3 LLLW CONCENTRATE GENERATION

Quantities of LLLW concentrate generated over the last several years are given in Table 14. The generation rates have decreased steadily since 1986. The major contributing factor in the decrease of LLLW concentrate generation is thought to be the implementation of the charge-back system, where the generators were charged for their disposal of dilute LLLW. An awareness of waste generation as well as an attempt to reduce unnecessary waste generation resulted from the charge-back program. The program has since been terminated, with new programs emphasizing waste reduction at various facilities being implemented.

6. LLLW SYSTEM PERFORMANCE

LLLW is collected by the LLLW CAT System, transferred to the evaporator feed tank (W-22), and fed semibatchwise to the LLLW evaporator as necessary to maintain adequate LLLW collection system capacity. The concentrate produced in each evaporator run or campaign is then transferred to one of several LLLW concentrate storage tanks in the evaporator complex and eventually transferred to the MVSTs. A description of the evaporation process was reviewed in Chap. 2.

While the LLLW evaporator is run according to a standardized procedure, the volume reduction efficiency of each evaporator batch varies dramatically. The volume reduction factor (VRF) is defined as the ratio of dilute LLLW fed to the evaporator to the concentrated LLLW produced from an evaporator campaign. The objectives of this study are (1) to determine which waste streams are the primary volume contributors to the LLLW concentrate (which will allow a prediction of the variability of the evaporator performance as a function of the LLLW collections from specific generators), (2) to explore the contributions of operational variability on the performance of the LLLW evaporator, and (3) to explore possible errors in the monitoring of dilute and concentrated LLLW inventories.

6.1 DATA SOURCES AND COLLECTION

The LLLW evaporator performance was analyzed using generator, evaporator feed, and concentrate production data specific to each evaporator batch or campaign. Data quantifying the specific LLLW feed sent to the evaporator complex (Building 2531) for each LLLW evaporator campaign were gathered from the monthly LLLW Collection Tank Inventory and Transfers log sheets, Service Tank Balance Sheets, and a monthly summary of evaporator feeds and products collected by the Gaseous and Liquid Waste Operations Group in the E&HP Division. Data quantifying the concentrate produced from each LLLW evaporator campaign were extracted from the Service Tank Balance Sheets and a monthly summary of evaporator feeds and products. The LLLW collection volume information reported by the Waste Operations Group is calculated from the daily changes in the level of each LLLW collection and transfer

tank, evaporator service tank, and each MVST. Although the accuracy of each of the tank level detectors cannot be quantified, it is generally understood that the accuracy of the level detectors is quite good, and thus errors in tracking the dilute and concentrated LLLW inventories cannot account for a large variability in the VRF. The following section will explore the possible effects of varying feed characteristics and operational variability on the VRF.

6.2 DATA ANALYSIS

The data in Table 15 summarize the dilute LLLW fed to each of the LLLW evaporators from tank W-22, the concentrate production, and the VRF for each evaporator campaign from 1986 through 1988. The large variability in the VRF from different evaporator campaigns can be readily observed from Table 15. In fact, over the 3-year period from January 1986 to December 1988, the VRF of each evaporator batch varied from a low of 5.3 to a high of 43.8. The reasons for the variability in evaporator performance are most likely twofold: (1) the different characteristics of wastes routinely collected from individual generators vary in radionuclide and inorganic salt concentrations, causing varying degrees of volume reduction efficiencies for specific waste streams, and (2) the operation of the LLLW evaporator experienced variability.

6.2.1 Relationship Between VRF and LLLW Collections from Specific Generators

A stepwise regression program of SAS was used to analyze the evaporator campaign data. The purpose of the analysis was to determine which generators, if any, were primarily responsible for LLLW concentrate production.

A linear model that relates LLLW generation from specific generators to LLLW concentrate production is

$$\sum x_i a_i = \frac{1}{VRF},$$

where x_i is the volume fraction of the waste or rainfall collected from each LLLW generator or the amount of rainfall collected for a given evaporator campaign, a_i is a

Table 15. LLLW evaporator data, 1986–1988

Evaporator campaign dates	LLLW sent to evaporators (gal)		Concentrated LLLW generated (gal)		VRF
	2A2	A1	2A2	A2	
1986					
02/25–05/19	37,549	60,438	1183	5012	15.8
05/19–08/14	76,565	54,054	3108	2484	23.4
11/03–11/22	39,841		1396		28.5
11/20–12/09	48,080		1122		42.9
12/08–01/17/87	51,737	11,463	1296	1760	20.7
1986 overall					**25.2**
1987					
01/16–01/30	32,937		1987		16.6
01/30–02/17	29,291		1978		14.8
02/16–02/28	19,974		2101		9.5
02/28–03/29	38,996		1664		23.4
03/23–06/09	58,267		2100		27.8
06/09–07/05	28,630		2553		11.2
06/22–08/24	43,243		1260		34.3
08/13–10/30	73,760		1690		43.6
10/30–01/17/88	58,118		1940		30.0
1987 overall					**22.2**
1988					
01/17–02/06	43,496		2708		16.1
02/04–03/07	13,428		2528		5.3
03/03–04/06	49,667		1396		35.6
04/05–06/25	39,403		1377		28.6
06/25–08/05	33,258		2730		12.2
08/01–09/16	19,924		3166		6.3
09/05–11/10	1,279	50,172		1710	30.1
11/07–12/01		35,970		1560	23.1
1988 overall					**16.7**

constant which represents the amount of concentrate produced from the volume of dilute LLLW collected from each generator or unit of rainfall during the campaign, and *VRF* represents the volume reduction factor of each campaign.

The regression analysis provided the following model:

$$\frac{1}{VRF} = 1.87\,vf_{3544} + 0.14\,vf_{3517},$$

with

$$R\text{-}squared = 0.77\ ,$$

where vf_{3544} is the volume fraction of the PWTP ion-exchange eluate sent to the LLLW system for evaporation and vf_{3517} is the volume fraction of waste from the FPDL present in the dilute LLLW fed to the evaporator in a given evaporator campaign respectively.

The model demonstrates that of the many generators listed in Table 4 only the LLLW collected from two areas, the PWTP and the FPDL, contributes significantly (at a 90% confidence limit) to the LLLW concentrate production. The volumes from all other sources, including contribution from rainfall, had no significant effect on concentrate production in the presence of these facilities' generations. It must be noted, however, that this regression analysis only accounts for 77% of the variability present in concentrate production from each campaign and consequently does not comprise a model of the system that alone would be adequate for LLLW system simulation or could accurately predict concentrate production.

6.2.2 Operational Variability

Operational variability also appears to have a significant effect on the volume reduction efficiency of the LLLW evaporator. Figure 10 shows the relationship between the VRF and the amount of dilute LLLW fed to the evaporator in a given campaign. These data are summarized in Table 16. As can be discerned from Fig. 10, as a greater volume of dilute LLLW is processed through the evaporator in a given campaign, the VRF for that campaign is increased dramatically. In fact, the observed VRFs vary from a low of ~5.3 when 13,428 gal of dilute LLLW is processed in a campaign to a high of 43.6 when 73,760 gal of dilute LLLW are fed.

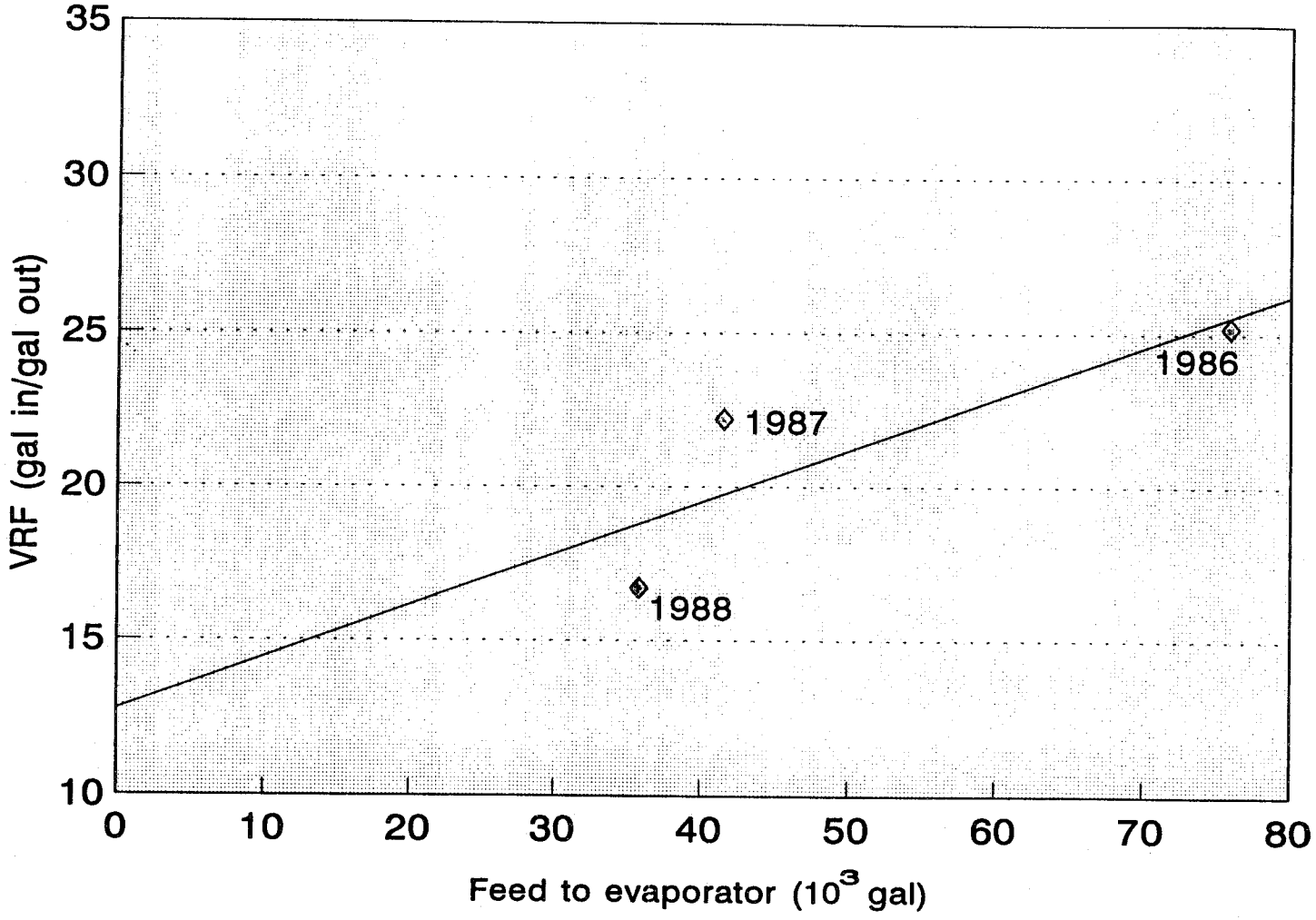

Fig. 10. Volume reduction factor (VRF) as a function of dilute LLLW fed to the evaporator.

As was mentioned earlier, the operating procedure for the LLLW evaporator calls for the evaporator to be run until the specific gravity of the LLLW concentrate reaches a value of ~1.25. Also, the evaporator procedure specifies that the evaporator operate at a constant level. The operating data indicate that both of these specifications cannot necessarily be met concurrently. A certain amount of dilute LLLW feed must be available to process through the evaporator in a given campaign to allow concentration to a specific gravity of 1.25 while maintaining a safe operating level in the LLLW evaporator. If an insufficient amount of feed is available, then the evaporator is run according to evaporator level, and the specific gravity target is not met. In these instances, the volume reduction efficiency for that campaign is decreased.

Over the past 3 years, the LLLW evaporator batch sizes have, on average, decreased. Figure 11 shows that since 1986 the average size of an evaporator batch fell from ~75,000 gal to slightly under 40,000 gal in 1988. Consequently, the average volume reduction factor fell from ~25 in 1986 to ~16 in 1988.

6.3 RESULTS

There are two major sources of VRF variability in the operation of the LLLW evaporator: (1) variability in the source of the feed of each evaporator batch and (2) variability in the operation of the evaporator itself. As was demonstrated in Sect. 6.2.1, only two facilities, the FPDL and the PWTP, are most important statistically as LLLW concentrate generators. Thus, these two generators need to be targeted as areas for future sampling campaigns to characterize their waste.

After the wastes are characterized, the potential for source treatment needs to be determined. The potential savings of LLW concentrate to be realized by the elimination of these areas from the central LLLW system is ~6000 gal annually, which corresponds to a cost savings of ~$300,000 per year. The cost savings and volume reduction associated with the elimination of this LLW concentrate will need to be compared with the cost and waste production of potential source treatment processes.

To improve the operation of the LLLW evaporator and minimize the LLLW concentrate production rate, larger evaporator batches will have to be run. If the

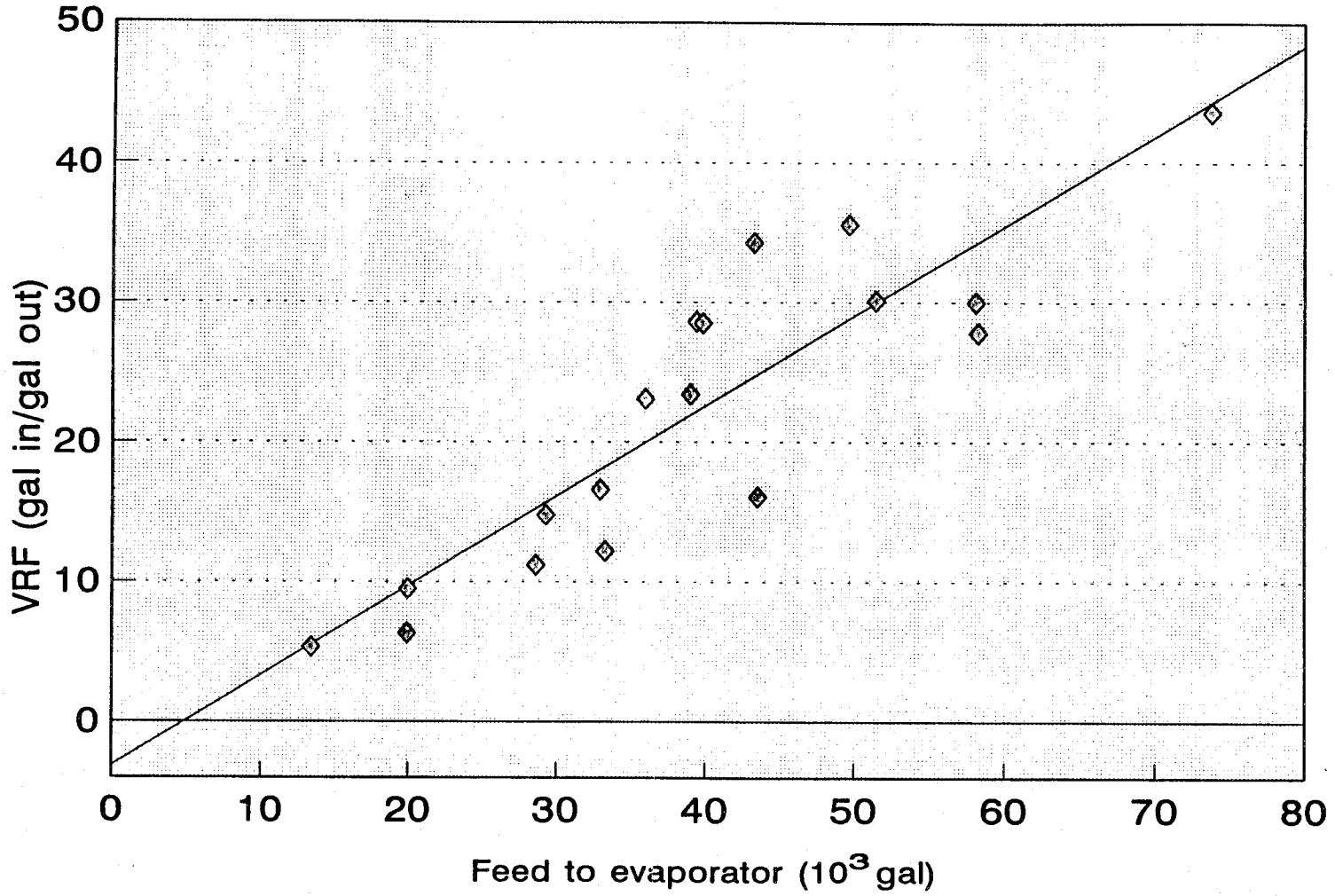

Fig. 11. Evaporator performance 1986–1988: VRF as a function of average feed per batch.

batch size were to be increased to ~55,000 gal of dilute LLLW, a reduction of ~5000 gal of concentrate LLLW could be achieved with a cost savings of ~$250,000 annually.

Table 16. LLLW evaporator data 1987–1988

Campaign dates	Total feed of LLLW to evaporator (gal)	Volume reduction factor (VRF)
01/16/87–01/30/87	32,937	16.6
01/30/87–02/17/87	29,291	14.8
02/16/87–02/28/87	19,974	9.5
02/28/87–03/29/87	38,996	23.4
03/23/87–06/09/87	58,267	27.8
06/09/87–07/05/87	28,630	11.2
06/22/87–08/24/87	43,243	34.3
08/13/87–10/30/87	73,760	43.6
10/30/87–01/17/87	58,118	30.0
01/17/87–02/06/87	43,496	16.1
02/04/88–03/07/88	13,428	5.3
03/03/88–04/06/88	49,667	35.6
04/05/88–06/25/88	39,403	28.6
06/25/88–08/05/88	33,258	12.2
08/01/88–09/16/88	19,924	6.3
09/05/88–11/10/88	51,451	30.1
11/07/88–12/01/88	35,970	23.1

7. LLLW SYSTEM MASS BALANCE

The data obtained from generator interviews, surveys of the ORNL literature, the Liquid Waste Weekly Summary Sheets, and sampling information were entered in the LLLW database and were analyzed and compiled to obtain a preliminary mass balance of the LLLW system. Tables 17 and 18, respectively, summarize the nonradioactive and radioactive components entering the LLLW system. These tables are structured on the basis of the stream designations shown in Fig. 12. The generators shown in Fig. 12 and the mass flows summarized in Tables 17 and 18 are intended to represent expected waste generation rates for 1989 and future years. For example, the waste production from the REDC is projected based on an increase in target processing due to new programs, and the LLLW generated in the Fuel Recycle Division has been

Table 17. Mass flow of nonradiological components in the LLLW system (for stream numbers, refer to Fig. 12)

Non-radioactive component	Stream # and name													
	1A HFIR	1B WC-20	1 HFIR+WC-20	2 W-1A	3 WC-2	4 WC-3	5 WC-5&6	6 WC-7	7 WC-8	8 WC-9	9 WC-10	10 WC-11	11 WC-12	12 W-12
Water	138000	80000	218000	73170	4133	860	7270	960	24400	15300	73200	27000	8180	84350
Nitric acid	452	0.05	452.05					1			103			6
Sodium hydroxide	1048	284	1332		6		23	7	29	6	113.9	46	75	347
Potassium hydroxide		2089	2089								1			
Potassium permanganate											27			
Potassium Carbonate		9686	9686											
Potassium Dichromate														
Acid butyrates		0.82	0.82											
Adogen HCl		24	24											
AMSCO (pet. naphtha)		768	768											
2,5-dibutylhydroquinone		1.1	1.1											
Diisopropylbenzene		24	24											
2-ethylhexanol		48	48											
HDEHP extractant		151	151											
HCl		146	146					1			1			
Lithium chloride		123	123											
Lithium nitrate		0.07	0.07											
Mercury (II) nitrate		3.2	3.2											
Sodium aluminate		115	115											
Sodium thiosulfate		0.63	0.63											
Calcium carbonate	18	10	28	10	1	1	1	1	3	2	10	4	1	11
Magnesium carbonate	3	2	5	2	1	1	1	1	1	1	1	1	1	2
EDTA								1						
Ammonium hydroxide											1			
Detergents											200			15
Alpha-hydroxyisobutyric acid											1			
Citric acid											11			
Methyl isobutyl ketone											1			
Oxalic acid											33			
Sulfurous acid														200
Methanol														
Sulfuric acid														
Acetone														
Hydrofluoric acid														

Table 17 (continued)

Non-radioactive component	Stream # and name												
	13 WC-13	14 WC-14	15 W-16	16 W-17&18	17 WC-19	18 Bldg. 3019	19 Bldg. 3544 f	20 Bldg. 2531	21 Bldg. 3039	22 Bldg. 3517	23 Bldg. 2026	24 Trucked	25 Total
Water	30300	7400	18620	79260	62590	40430	29610	89500	148750	143100	3820	17350	1207553
Nitric acid		50		1	80	29	4000		1900				6622.05
Sodium hydroxide	61	36	38	154	100		2200	255	40	140			5008.9
Potassium hydroxide				1									2091
Potassium permanganate													27
Potassium Carbonate													9686
Potassium Dichromate	1												1
Acid butyrates													0.82
Adogen HCl													24
AMSCO (pet. naphtha)													768
2,5-dibutylhydroquinone													1.1
Diisopropylbenzene													24
2-ethylhexanol													48
HDEHP extractant													151
HCl				1									149
Lithium chloride													123
Lithium nitrate													0.07
Mercury (II) nitrate													3.2
Sodium aluminate													115
Sodium thiosulfate													0.63
Calcium carbonate	4	1	2	10	8	5	4	12	19	19	1	2	160
Magnesium carbonate	1	1	1	2	1	1	1	2	3	3	1	1	36
EDTA													1
Ammonium hydroxide		1		1									3
Detergents	1	2		10						230		20	478
Alpha-hydroxyisobutyric acic													1
Citric acid													11
Methyl isobutyl ketone													1
Oxalic acid										230			263
Sulfurous acid			90										290
Methanol	1												1
Sulfuric acid	2				20								22
Acetone	1	3											4
Hydrofluoric acid		1											1
													1,233,669

Table 18. Curie flow of radiological components in the LLLW system (for stream numbers, refer to Fig. 12)

Radioactive component	Stream # and name													
	1A HFIR	1B WC-20	1 HFIR+WC-20	2 W-1A	3 WC-2	4 WC-3	5 WC-5&6	6 WC-7	7 WC-8	8 WC-9	9 WC-10	10 WC-11	11 WC-12	12 W-12
Ag-110m											0.8			
Am-241		1.7	1.7					1.0E-07			0.001			
Am-242		0.001	0.001											
Am-243		0.1	0.1								0.001			
C-14														
Cf-252		0.8	0.8								0.001			
Cm-244		78.2	78.2								0.001			
Cm-246		0.2	0.2											
Co-56											0.001			
Co-58														
Co-60	5		5					6.0E-06			3			
Cr-51	0.001		0.001											
Cs-134														
Cs-137	0.001		0.001								30			50
Eu-152	0.001		0.001								0.001			
Eu-154	0.001		0.001								0.001			
Eu-155														
Fe-55											0.001			
Fe-59											0.001			
Gd-153											0.001			
H-3											0.00012			
I-125											0.0012			
I-129											3			
Ir-192											3			
MFP		42000	42000											
Mn-54	0.001		0.001											
Ni-63											0.001			
Pm-147											3			
Pu-238											0.001			
Pu-239											0.001			0.001
Pu-242														
Ra-226														
Ru-106														
Sr-85														
Sr-90								0.000012			30			
Ta-182	0.001		0.001					1.0E-07						
Tc-95m														
Tc-99											3			
Th-228														
Th-232														0.001
U-233														0.001
U-234											0.001			
U-235											0.001			0.001
U-238														0.001
W-188														
Zr-95														
mixed Pu		0.5	0.5											
other Cf		0.001	0.001											
other Cm		0.001	0.001											

Table 18 (continued)

Radioactive component	Stream # and name 13 WC-13	14 WC-14	15 W-16	16 W-17&18	17 WC-19	18 Bldg. 3019	19 Bldg. 3544 F	20 Bldg. 2531	21 Bldg. 3039	22 Bldg. 3517	23 Bldg. 2026	24 Trucked	25 Total
Ag-110m													0.8
Am-241		0.001											1.702
Am-242													0.001
Am-243		0.001											0.102
C-14	0.001												0.001
Cf-252													0.801
Cm-244													78.201
Cm-246													0.2
Co-56													0.001
Co-58	0.001												0.001
Co-60	0.011				0.001		0.00011		0.012				8.024116
Cr-51													0.001
Cs-134	0.001	0.06			0.001								0.062
Cs-137	0.001	0.7			0.001	0.001	0.0091		0.0025	15000	0.004		15080.72
Eu-152	0.001	0.001					0.00034		0.0032				0.00754
Eu-154	0.001						0.00014		0.0019				0.00504
Eu-155							0.000031		0.00062				0.000651
Fe-55													0.001
Fe-59	0.001												0.002
Gd-153													0.001
H-3	0.001			0.00012									0.00124
I-125													0.0012
I-129													3
Ir-192													3
MFP													42000
Mn-54	0.001				0.001								0.003
Ni-63													0.001
Pm-147													3
Pu-238		0.001											0.002
Pu-239		0.001											0.003
Pu-242		0.001											0.001
Ra-226	0.001				0.001								0.002
Ru-106					3								3
Sr-85	0.001												0.001
Sr-90	0.001				0.001	0.001				20000			20030
Ta-182													1.00E-03
Tc-95m	0.001												0.001
Tc-99	0.001												3.001
Th-228									0.0012				0.0012
Th-232		2.2E-06											0.001002
U-233	0.001					9.6							9.602
U-234													0.001
U-235						0.001							0.003
U-238	0.001	0.000034				0.00067					1.0E-06		0.002705
W-188				0.0012									0.0012
Zr-95									0.000088				0.000088
mixed Pu													0.5
other Cf													0.001
other Cm													0.001

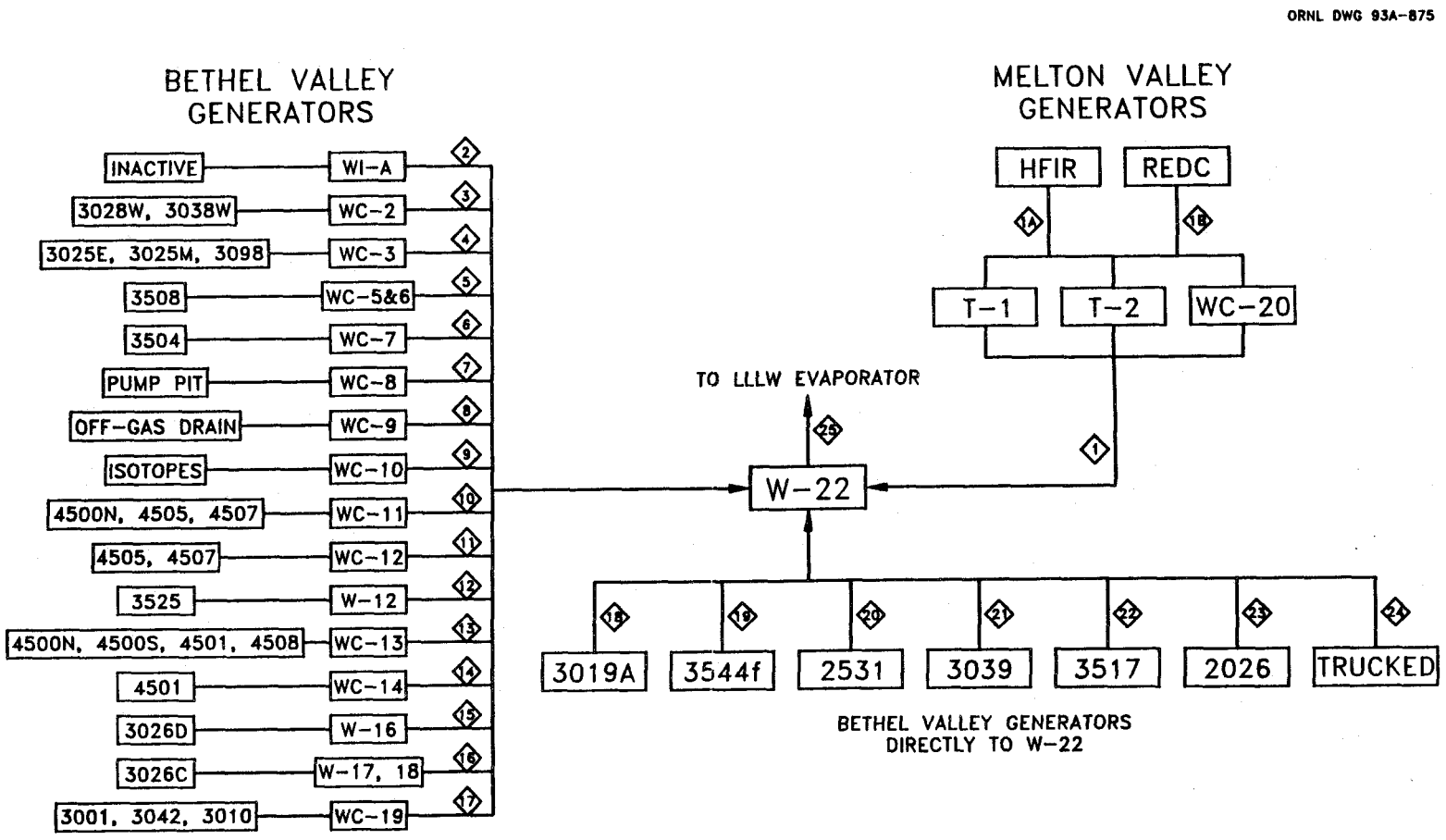

Fig. 12. Stream designations for generators of LLLW.

eliminated since that waste in no longer collected in the ORNL LLLW system. Inactive tanks not directly contributing waste to the active LLLW CAT System and the LLLW contained in Tank W-21 (PWTP concentrate) are not part of this analysis. The results of this mass balance compare favorably with previous analytical data obtained concerning the LLLW system; however, further sampling of the LLLW system will be required to verify the mass balance.

The LLLW system data indicate that there are currently or will be in FY 1990 three primary contributors of dissolved solids to the LLLW system; they are the PWTP, the FPDL, and the REDC. The PWTP and FPDL are the primary generators of nitrated waste, and the REDC is the primary generator of potassium carbonate collected in the LLLW system. These results are of particular interest since it is the dissolved solids content that primarily determines the VRF of each evaporator batch. This result compares very well with the results presented in Chap. 5.

The data presented in Table 18 indicate that the primary generators of radionuclides entering the LLLW system are, again, the REDC and the FPDL. While small amounts of radionuclides are generated from almost every area connected to the LLLW system, over 99% of all of the radionuclides entering the LLLW system are generated at either the REDC or the FPDL. Also, the majority of the transuranic isotopes discharged to the LLLW system are generated at the REDC facility.

These data will serve as the basis to develop a long-term LLLW treatment process, to perform analyses of possible source treatment options, and to determine sampling points in the LLLW system for characterization efforts.

8. CONCLUSIONS AND RECOMMENDATIONS

Figure 13 is a summary of the present status of the LLLW database, that is, the data that have been collected to date and those that are currently being obtained. It also indicates general data needed to finalize an analysis of the LLLW system. The database is complete with respect to the following general categories:

1. generator LLLW volume production since 1986,
2. generator facility descriptions,

3. charge-back information,
4. general LLLW system information pertaining to the physical system,
5. evaporator campaign data, and
6. LLLW concentrate volumes.

Analysis of these limited data has provided the following conclusions:

1. There are two generators that primarily affect the VRF of the evaporator: the PWTP and the FPDL. As new programs develop, the REDC will become a primary contributor to concentrate production.
2. A significant portion of the variability observed in the VRF from evaporator batch to evaporator batch can be attributed to operational effects.
3. Rainfall contributions account for ~20% of the LLLW collections.
4. There are two primary generators of the radionuclides collected by the LLLW system: the REDC and the FPDL.
5. A working mass balance of the LLLW system has been completed.

Analytical data from the major LLLW generators and certain critical areas of the LLLW system are required before the systems analysis can be completed. Sampling of the primary generators and of the evaporator feed tank, W-22, is necessary to validate the mass balance completed in this study. Based on results of the systems analyses to date, sampling of the REDC waste to determine the specifics of their mixed fission products stream and sampling of the FPDL when cesium and strontium production runs are being made should have top priority. Tank W-22 should be sampled routinely so that the feed to the evaporator can be well characterized and the efficiency of the evaporation process can be monitored.

Once the waste streams from the major generators are well characterized, the feasibility of source treatment at each of the major generators needs to be determined. For this work to be done effectively, a thorough understanding of each process must be gained, and development work will need to be completed in conjunction with the generator.

Future work will entail the following activities:

1. Completion of the menu-driven, user friendly database. The database will be designed so that a general understanding of personal computer operation will allow ready access to all LLLW system data.
2. The LLLW system will be optimized with respect to source treatment vs a central treatment system. To do this analysis, an estimate of the Low-Level Waste Disposal Development and Demonstration Facility (LLWDDD) Class I and II disposal limits will be required.
3. A flowsheet for centralized LLLW treatment will be developed.
4. If funding becomes available, work is planned with the major generators to explore the different source treatment options available for their use.

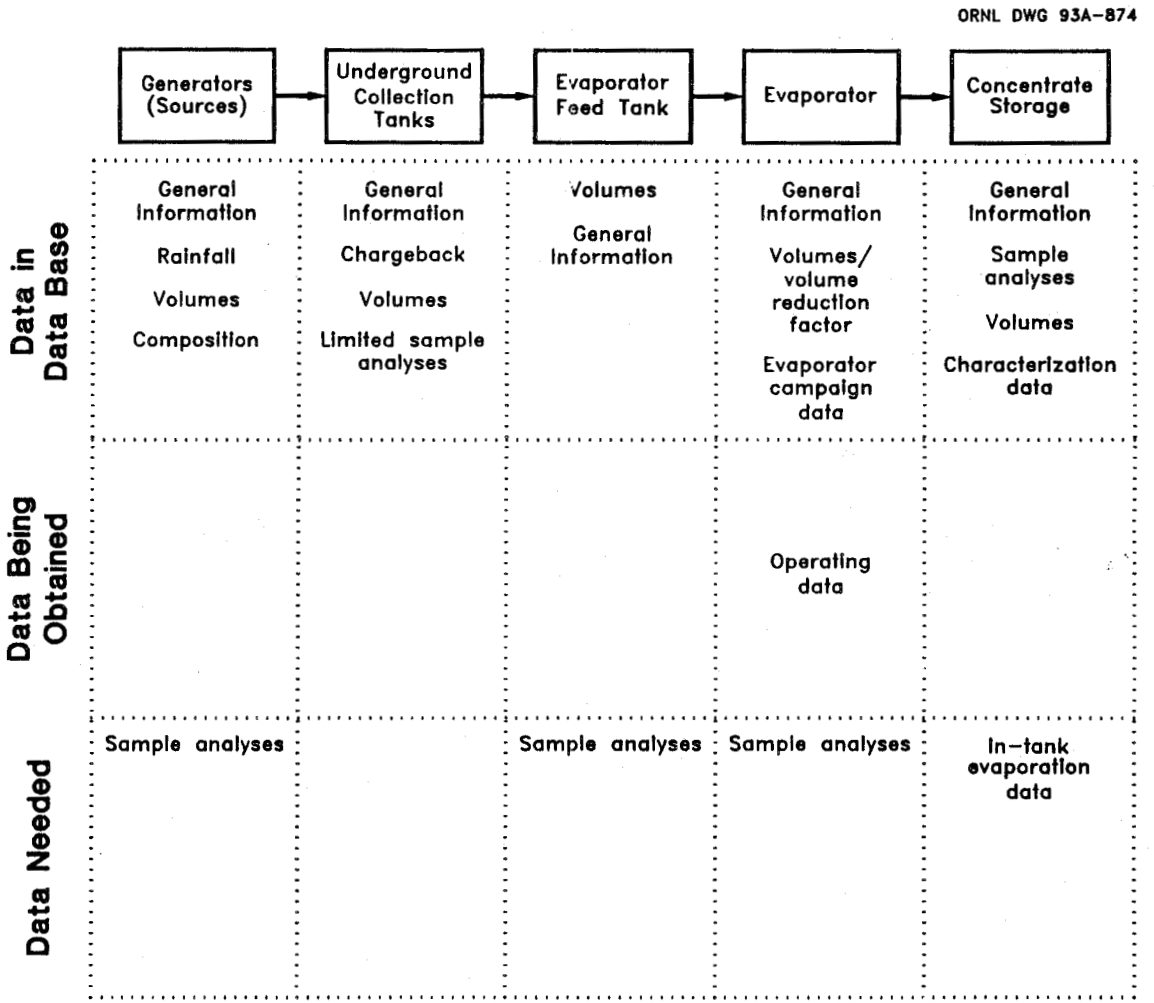

Fig. 13. Present status of the LLLW database.

REFERENCES

1. L. E. Mc Neese et al., *Overall Strategy and Program Plan for Management of Radioactively Contaminated Liquid Wastes and Transuranic Sludges at the Oak Ridge National Laboratory,* ORNL/TM-10757, Oak Ridge Natl. Lab., December 1988.

2. F. J. Pretez et al., *Characterization of Low-Level Liquid Wastes at the Oak Ridge National Laboratory,* ORNL/TM-10218, Oak Ridge Natl. Lab., December 1986.

3. J. F. Walker Jr., J. J. Perona, and S. M. Robinson, *In-tank Evaporator Demonstrations During 1990/1991 at the ORNL Melton Valley Storage Tanks,* ORNL/TM-12036, Oak Ridge Nat. Lab., October 1992.

INTERNAL DISTRIBUTION

1-5. T. J. Abraham
6. W. D. Arnold
7. P. L. Askew
8. J. W. Autry
9. P. T. Barton
10. J. M. Begovich
11. J. T. Bell
12. C. E. Benson
13. B. S. Bowers
14. S. E. Breeding
15. C. H. Brown, Jr.
16. J. M. Brown
17. C. H. Byers
18. C. Clark, Jr.
19. D. A. Conatser
20. A. G. Croff
21. J. S. Davidson
22. D. L. Daugherty
23-28. S. M. DePaoli
29. B. G. Eads
30. C. A. Easterday
31. J. T. Etheridge
32. M. C. Evans
33. J. R. Forgy, Jr.
34. V. L. Fowler
35. C. E. Frye
36. W. Fulkerson
37. K. V. Gabrielsen
38. H. R. Gaddis
39. S. B. Garland
40. R. K. Genung
41. R. G. Grubb
42. R. E. Helms
43. J. R. Hightower
44. F. R. Hodges
45. D. W. Holladay
46. J. H. Hooyman
47. R. J. Hydzik
48. C. M. Kendrick
49. T. E. Kent
50. F. C. Kornegay
51. J. R. Lawson
52. J. R. Macon
53. J. L. Maddox
54. C. P. Manrod
55. R. C. Mason
56. R. F. Masterson
57. B. C. McClelland
58. L. E. McNeese
59. D. R. McTaggart
60. S. R. Michaud
61. T. M. Monk
62. C. E. Nix
63. R. C. Orrin
64. J. R. Parrott, Jr.
65. B. D. Patton
66. J. J. Perona
67. D. J. Peterson
68. S. J. Poarch
69-73. S. M. Robinson
74. P. H. Roush
75. S. T. Rudell
76. M. K. Savage
77. T. F. Scanlan
78. C. B. Scott
79. J. A. Setaro
80. R. B. Shelton
81. G. W. Sherrill
82. L. R. Simmons
83. J. L. Snyder
84. R. C. Stewart
85. L. E. Stratton
86. J. H. Swanks
87. W. T. Thompson
88. J. R. Trabalka
89. J. R. Travis
90. M. W. Tull
91. D. W. Turner
92. C. K. Valentine
93. R. I. Van Hook
94-99. A. B. Walker
100. D. M. Wasserman
101. J. S. West
102. W. C. Yee
103. D. S. Zill
104. Central Research Library
105. Document Reference Section
106-107. Laboratory Records
108. Laboratory Records-RC
109. ORNL Patent Section

EXTERNAL DISTRIBUTION

110. Office of Assistant Manager, Energy Research and Development, DOE-OR, P.O. Box 2001, Oak Ridge, TN 37831
111-112. Office of Scientific and Technical Information, P.O. Box 62, Oak Ridge, TN 37831