MARTIN MARIETTA ENERGY SYSTEMS LIBRARIES
3 4456 0422075 0

ornl

ORNL/TM-12931

OAK RIDGE NATIONAL LABORATORY

MARTIN MARIETTA

Treatability of TCE-Contaminated Clay Soils at the Rinsewater Impoundment, Michoud Assembly Facility

A. J. Lucero
V. P. Gilbert
J. D. Hewitt
L. J. Koran, Jr.
H. L. Jennings
T. L. Donaldson
O. R. West
S. R. Cline
D. S. Marshall

OAK RIDGE NATIONAL LABORATORY
CENTRAL RESEARCH LIBRARY
CIRCULATION SECTION
4500N ROOM 175
LIBRARY LOAN COPY
DO NOT TRANSFER TO ANOTHER PERSON
If you wish someone else to see this report, send in name with report and the library will arrange a loan.

MANAGED BY
MARTIN MARIETTA ENERGY SYSTEMS, INC.
FOR THE UNITED STATES
DEPARTMENT OF ENERGY

This report has been reproduced directly from the best available copy.

Available to DOE and DOE contractors from the Office of Scientific and Technical Information, P.O. Box 62, Oak Ridge, TN 37831; prices available from (615) 576-8401, FTS 626-8401.

Available to the public from the National Technical Information Service, U.S. Department of Commerce, 5285 Port Royal Rd., Springfield, VA 22161.

This report was prepared as an account of work sponsored by an agency of the United States Government. Neither the United States Government nor any agency thereof, nor any of their employees, makes any warranty, express or implied, or assumes any legal liability or responsibility for the accuracy, completeness, or usefulness of any information, apparatus, product, or process disclosed, or represents that its use would not infringe privately owned rights. Reference herein to any specific commercial product, process, or service by trade name, trademark, manufacturer, or otherwise, does not necessarily constitute or imply its endorsement, recommendation, or favoring by the United States Government or any agency thereof. The views and opinions of authors expressed herein do not necessarily state or reflect those of the United States Government or any agency thereof.

ORNL/TM-12931

Treatability of TCE-Contaminated Clay Soils at the Rinsewater Impoundment, Michoud Assembly Facility

A. J. Lucero, V. P. Gilbert, J. D. Hewitt,
L. J. Koran, Jr., H. L. Jennings, T. L. Donaldson,
O. R. West, S. R. Cline, and D. S. Marshall

Date Published: February 1995

Prepared by the
OAK RIDGE NATIONAL LABORATORY
Oak Ridge, Tennessee 37831
managed by
MARTIN MARIETTA ENERGY SYSTEMS, INC.
for the
U. S. DEPARTMENT OF ENERGY
under contract DE-AC05-84OR21400

MARTIN MARIETTA ENERGY SYSTEMS LIBRARIES
3 4456 0422075 0

CONTENTS

FIGURES v

TABLES vii

ACRONYMS AND ABBREVIATIONS ix

EXECUTIVE SUMMARY xi

1. INTRODUCTION 1
   - 1.1 BACKGROUND 1
   - 1.2 TREATMENT TECHNOLOGIES 7
   - 1.3 OBJECTIVE AND SCOPE 10

2. EXPERIMENTAL APPROACH 11
   - 2.1 INTRODUCTION 11
   - 2.2 MATERIALS 11
     - 2.2.1 Description of Reaction Vessel and Treatability System 11
     - 2.2.2 Collection and Handling of Soil Cores 14
   - 2.3 PREPARATION OF SOIL CORES FOR EXPERIMENTS 17
   - 2.4 SAMPLE COLLECTION AND ANALYTICAL METHODS 18
   - 2.5 TREATMENT PROCEDURES/METHODS 19
     - 2.5.1 Vapor Stripping 21
     - 2.5.2 Peroxidation 22
     - 2.5.3 Calcium Oxide Addition 22
     - 2.5.4 Zero-Valence Metal Dehalogenation 22

3. RESULTS 23
   - 3.1 PHYSICAL OBSERVATIONS 23
   - 3.2 TREATMENT EFFICIENCIES 27
     - 3.2.1 Soil Cores 27
     - 3.2.2 Zero-Headspace Extractors 30

4. ECONOMIC ANALYSIS 33

5. CONCLUSIONS 34

6. RECOMMENDATIONS 35

7. REFERENCES 36

APPENDIX ESTIMATE OF COSTS FOR ON-SITE INCINERATION 37

FIGURES

Figure *Page*

1.1 Updated conceptual groundwater treatment model for the rinsewater impoundment vicinity. 2

1.2 TCE contamination in subsurface materials from 0 to 4 ft below the bottom of the rinsewater impoundment concrete liner. 4

1.3 TCE contamination in subsurface materials from 4 to 10 ft below the bottom of the rinsewater impoundment concrete liner. 5

1.4 TCE contamination in subsurface materials from 10 to 15 ft below the bottom of the rinsewater impoundment concrete liner. 6

1.5 Schematic diagram of a vapor stripping/soil mixing field implementation. 9

2.1 Schematic of experimental system for treating soil cores. 12

2.2 Mixing blade design. 15

2.3 Approximate rinsewater impoundment boring locations. 16

2.4 Mixing zones in a soil core. 20

2.5 Zero-headspace extractor. 24

3.1 Comparison of average pretreatment and post-treatment concentrations of TCE, *cis*-1,2-DCE, and *trans*-1,2-DCE for vapor stripping experiments. 29

3.2 Comparison of average pretreatment and post-treatment concentrations of TCE, *cis*-1,2-DCE, and *trans*-1,2-DCE for peroxidation experiments. 31

3.3 Comparison of average pretreatment and post-treatment concentrations of TCE, *cis*-1,2-DCE, and *trans*-1,2-DCE for vapor stripping experiments enhanced with the addition of calcium oxide 32

TABLES

Table *Page*

1 Comparison of experimental results for various treatment methods. 28

2 Summary of zero-valence metal dehalogenation experiments. 33

ACRONYMS AND ABBREVIATIONS

bgs	below ground surface
DCE	dichloroethylene
DOE	Department of Energy
FID	flame ionization detector
FTE	full-time equivalent
GC	gas chromatograph
HP	Hewlett Packard
IDOD	Interdivisional Operations Directive
MAF	Michoud Assembly Facility
MMES	Martin Marietta Energy Systems, Inc.
MMMSS	Martin Marietta Manned Space Systems
NASA	National Aeronautics and Space Administration
ORNL	Oak Ridge National Laboratory
PID	photoionization detector
psi	pounds per square inch
RCRA	Resource Conservation and Recovery Act
rpm	revolutions per minute
SVE	soil vacuum extraction
TCE	trichloroethylene
VC	vinyl chloride
VOC	volatile organic compound
ZHE	zero-headspace extractor

EXECUTIVE SUMMARY

The Oak Ridge National Laboratory has conducted treatability studies on clay soils taken from the Rinsewater Impoundment at the National Aeronautics and Space Administration Michoud Assembly Facility (MAF). The soils are contaminated with up to 3000 mg/kg of trichloroethylene (TCE) and *cis*-1,2-dichloroethylene (DCE), less than 10 mg/kg of *trans*-1,2-DCE, and less than 1 mg/kg of vinyl chloride.

The goal of the study described in this report was to identify and test *in situ* technologies and/or develop a modified treatment regime to remove or destroy volatile organic compounds from the contaminated clay soils. Much of the work was based upon previous experience with mixed-region vapor stripping and mixed-region peroxidation. Laboratory treatments were performed on intact soil cores that were taken from contaminated areas at the Rinsewater Impoundment at MAF. Treatability studies were conducted on soil that was close to *in situ* conditions in terms of soil structure and contaminant concentrations. There was some loss of contaminants from the soil cores during preparation for treatment; however, contaminant levels still remained comparable to those in the field.

The technologies tested to date include mixed-region vapor stripping with either ambient air or heated air, mixed-region peroxidation, and enhanced mixed-region vapor stripping with the addition of calcium oxide. Additional experiments were conducted to evaluate the feasibility of treating the soils using zero-valence metal dehalogenation with iron filings. The experiments yielded promising results, but further development will be required to apply this process.

The experimental results indicate that each of these approaches is capable of removing some fraction of the organics present. Vapor stripping alone appears to have physical limitations due to the amount of water present in the soil. With the high (up to 70%) water content of the soil, the soil mixing process without dewatering does not appear to substantially increase the permeability of the clay soil and thus limits the effectiveness of the vapor stripping process. The addition of calcium oxide removes much

of the moisture from the soil and therefore makes it more permeable and amenable to vapor stripping. This approach yielded the most promising results. Application of the treatment in the laboratory also yielded acceptable post-treatment soil characteristics.

Mixed-region vapor stripping enhanced with the addition of calcium oxide yielded removal efficiencies for TCE of 68 to 91% and removal efficiencies for *cis*-1,2-DCE of 88 to 97%. Additional laboratory-scale tests are recommended to more accurately define the time required to achieve acceptably low residual concentrations of organics. The time required for treatment is expected to significantly affect the cost of the soil mixing processes. However, the costs appear to be comparable to or less than costs for on-site incineration.

1. INTRODUCTION

1.1 BACKGROUND

The Rinsewater Surface Impoundment is located at the National Aeronautics and Space Administration (NASA) Michoud Assembly Facility (MAF) in east New Orleans, Louisiana; the impoundment is managed by Martin Marietta Manned Space Systems (MMMSS). The Rinsewater Impoundment was constructed in 1964 prior to the operation of the MAF by Martin Marietta Energy Systems, Inc. (MMES), and was used primarily to store dilute process wastewaters prior to treatment or disposal until closure of the impoundment began in November 1988 to comply with Resource Conservation and Recovery Act (RCRA) requirements.

Site characterization revealed the presence of 11 volatile organic compounds (VOCs). Trichloroethylene (TCE) concentrations were measured as high as several hundred milligrams per kilogram, and other VOCs such as *trans*-1,2-dichloroethylene (DCE), 1,1,1-trichloroethane, and toluene were found at lesser concentrations (CH2M Hill Co., 1989). Leaching potential and transport rate estimates for metals, using chromium as an indicator, were found to be low.

The surface soil may be described as a heterogeneous layer of fill material consisting of shelly sand and clay, varying in color, grain size, and compaction. This fill material overlies natural ground but is not present beneath the rinsewater impoundment. A thin unit of silty clay and rooty peat underlies the fill material from a depth of 3 to 5 ft. In some cases a silty to sandy clay with organic lenses is found at 6 to 10 ft, a water-bearing zone. Clay with silty sand lenses was found at 11 to 12 ft. At 15 to 17 ft, a dark gray-green clay to sandy silt was found (Schreuder and Associates, Inc., 1987).

Evidence shows that the "40 foot" shallow aquifer that exists under the impoundment is not contaminated due to long-term pumping of the aquifer with Recovery Well #1 [Fig. 1.1 (CH2M Hill Co., 1990)], but the clay/silt/peat layer generally located 5 to 20 ft below ground surface (bgs) is contaminated with TCE and its anaerobic degradation by-products, DCE and vinyl chloride (VC).

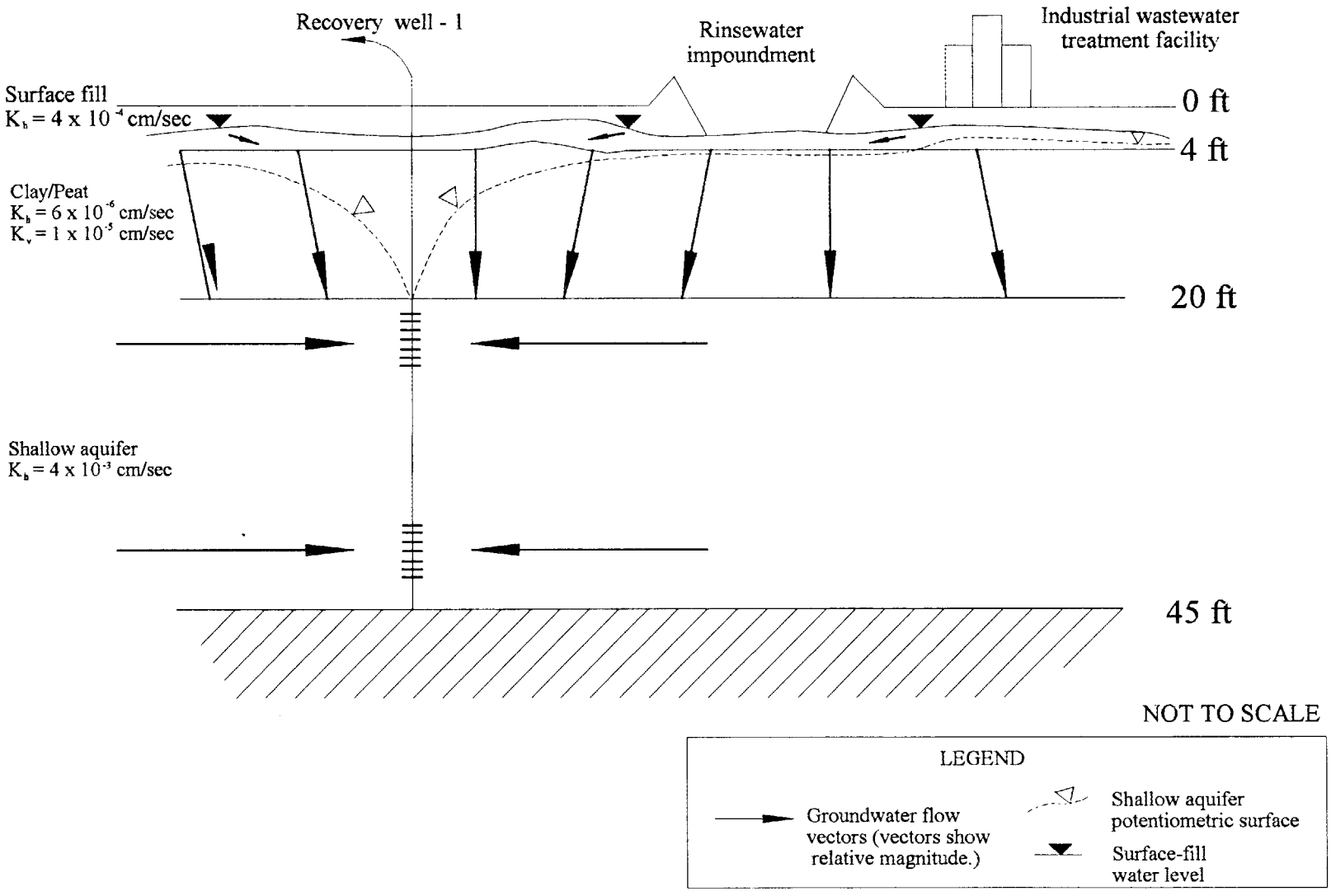

Fig. 1.1. Updated conceptual groundwater treatment model for the rinsewater impoundment vicinity.

The closure plan for this facility included a concentration limit of 1.2 mg/kg of TCE in soil and 0.075 mg/L in groundwater; characterization concentrations exceeded these limits for both soil and groundwater. For this reason remediation is required prior to closure of the facility (CH2M Hill Co., 1989). MMES is under contract to provide assistance to MMMSS with the closure of this facility. MMES has evaluated existing site characterization data and available technology options that may effectively remove VOCs from clay-type soils like those found in the impoundment site. Due to the similarity of soil conditions found at MAF and the X-231B Oil Biodegradation Unit located in the Portsmouth Gaseous Diffusion Plant, the technologies identified for the effective removal of volatiles from the clay-like soils found at Portsmouth (West *et al.*, 1993) were used as an initial screen for technologies to decontaminate MAF soils.

Contamination contour maps, similar to Figs. 1.2 through 1.4, were used to aid in locating sampling points for this investigation and to show contaminant locations under the Rinsewater Impoundment. More detailed information can be found in the closure investigation by CH2M Hill Company (CH2M Hill Co., 1989). The highest concentrations of chlorinated VOCs are located directly beneath the concrete base in an inverted-"L"-shaped area. As depth increases, the plume appears to decreases in size and level of contamination to a depth of approximately 15 ft (~10 ft below the concrete base).

As mentioned previously, the site characteristics at MAF are similar to those at the X-231B Unit at the Portsmouth Gaseous Diffusion Plant, in Piketon, Ohio. The X-231B Unit, being closed in compliance with RCRA requirements, had been used for the treatment and disposal of waste oils and degreasing solvents. Several volatile compounds were found in excess of those allowed for closure of the facility, and therefore remediation was required before closure.

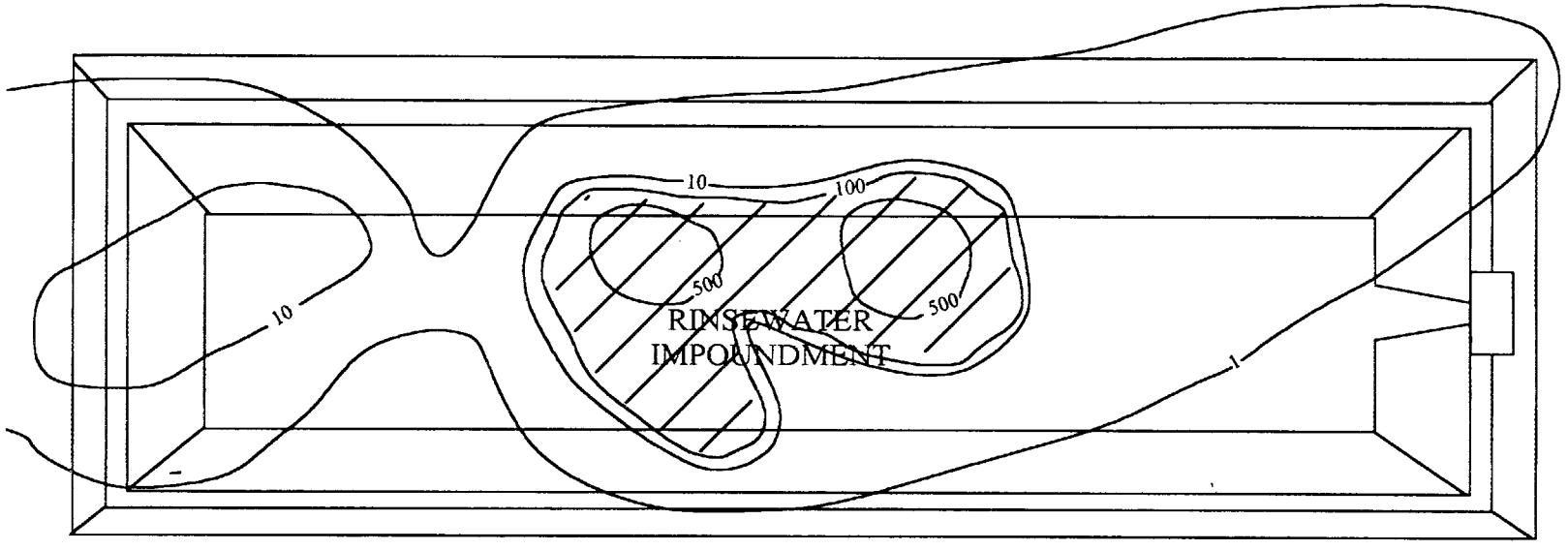

TCE concentrations (mg/kg)

NOT TO SCALE

Fig. 1.2. TCE contamination in subsurface materials from 0 to 4 ft below the bottom of the rinsewater impoundment concrete liner.

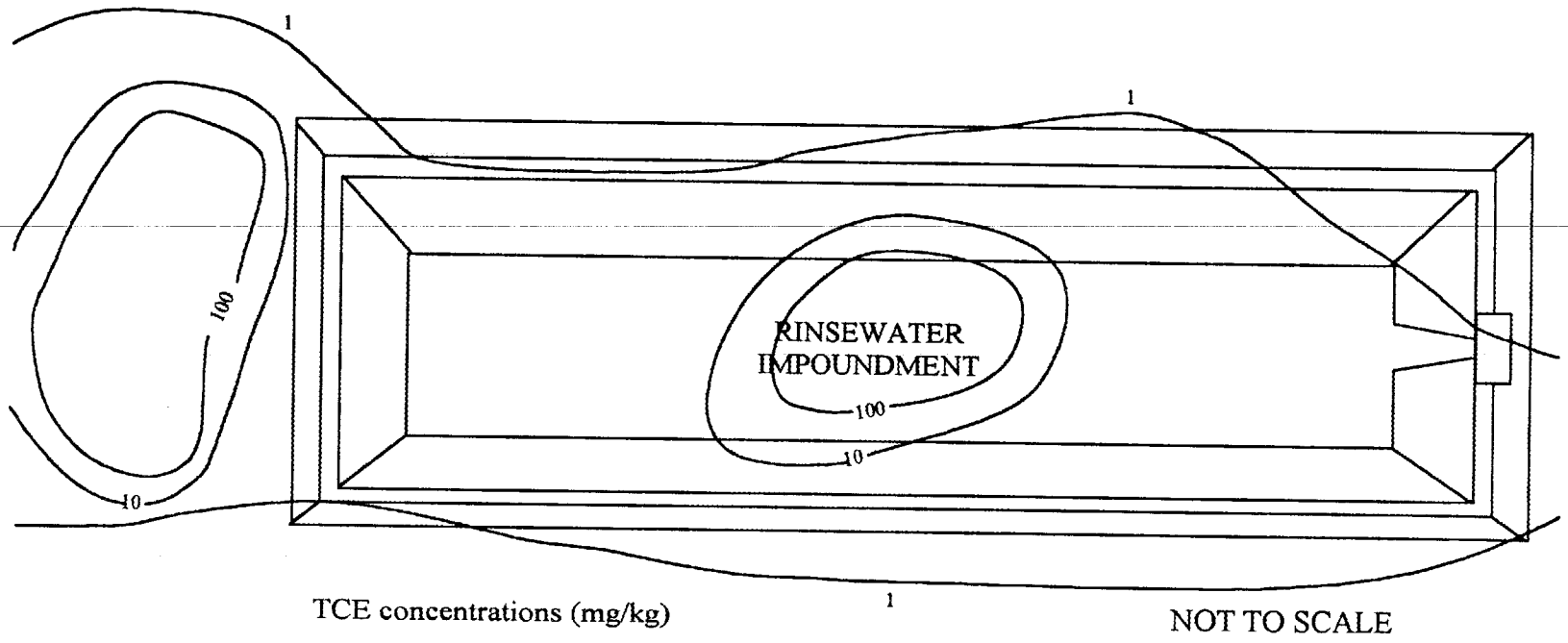

Fig. 1.3. TCE contamination in subsurface materials from 4 to 10 ft below the bottom of the rinsewater impoundment concrete liner.

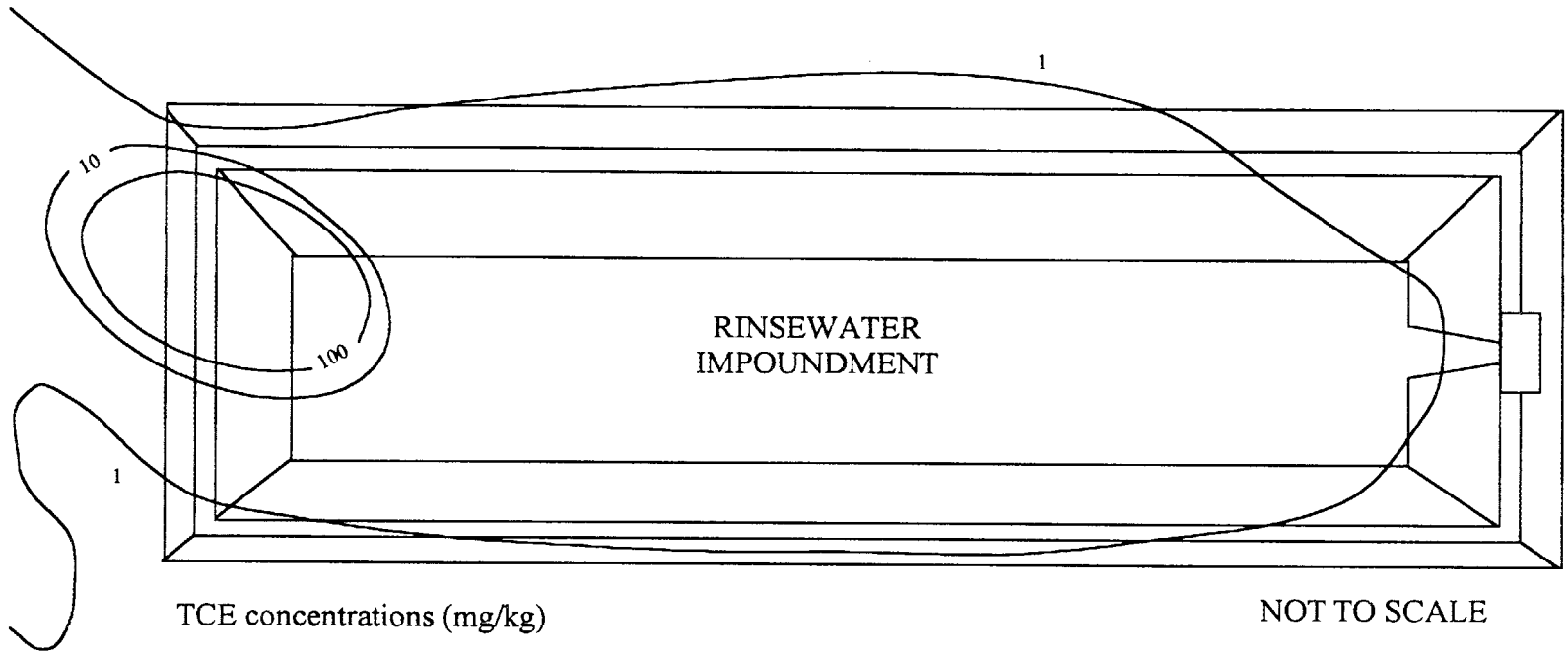

Fig. 1.4. TCE contamination in subsurface materials from 10 to 15 ft below the bottom of the rinsewater impoundment concrete liner.

As with the rinsewater impoundment at MAF, the soil characteristics exhibited low permeability and hydraulic conductivity [$K_{SAT} = 8.1 \times 10^{-7}$ to 1.5×10^{-6} cm/sec (Siegrist *et al.*, 1993)], but the soil at MAF is more highly contaminated with TCE and has a greater water and total organic content than did the Portsmouth soil. The Rinsewater Impoundment Facility exhibits vertical and horizontal hydraulic conductivities of $K_h = 4 \times 10^{-4}$ cm/sec in the surface-fill material; $K_h = 6 \times 10^{-6}$ cm/sec and $K_v = 1 \times 10^{-5}$ cm/sec in the clay peat region located 4 to 20 ft bgs; and $K_h = 4 \times 10^{-3}$ cm/sec for the shallow aquifer (Fig. 1.1) (CH2M Hill Co., 1989).

Soil core samples taken from the impoundment were used to conduct laboratory studies, including the examination of technologies suggested by the work done for Portsmouth (Siegrist *et al.*, 1993; West *et al.*, 1993). The following *in situ* technologies were chosen for evaluation: (1) vapor stripping, (2) peroxidation, and (3) zero-valence metal dehalogenation. Each of these technologies is coupled with soil mixing so that the difficulty with delivery of treatment media to the clay soils may be overcome. Zero-valence metal dehalogenation was added because of its potential for high treatment efficiency and ease of implementation. The key differences between the Portsmouth site and the Rinsewater Impoundment site—the higher concentrations of contaminants, the significantly higher moisture content, and the high total organic content at the latter site—were also noted. The technologies used in these experiments were chosen based on several performance criteria: (1) ease of implementation, (2) estimated amount of developmental work required for implementation at field scale, (3) reliability of the treatment method, (4) minimization of occupational hazards, and (5) minimization of full-scale remediation costs. This report contains details of the laboratory work conducted.

1.2 TREATMENT TECHNOLOGIES

Vapor stripping coupled with soil mixing is similar to conventional soil vacuum extraction (SVE) techniques. In both cases treatment occurs through the volatilization of organic contaminants into a moving air phase. The primary difference between vapor stripping coupled with soil mixing and

conventional SVE is the strategy for inducing airflow and for treating larger volumes of soil. Conventional SVE has proven effective only where soil conductivity is sufficiently high (e.g., $K > 10^{-3}$ cm/sec) so that adequate airflow is induced. In vapor stripping coupled with soil mixing, contaminated soil is treated in columns through which high-pressure air is delivered while mixing occurs (Fig. 1.5). A slight vacuum is applied to a shroud that is placed over the treatment column to capture the off-gas from the soil. The air is then channeled through a gas treatment process before being released into the atmosphere.

Peroxidation involves the addition of low-strength hydrogen peroxide (H_2O_2) to treat organically contaminated soil. Soil mixing is incorporated to aid in the delivery of the H_2O_2 throughout the soil. Ravikumar and Gurol (1991) percolated H_2O_2 through sand columns precontaminated with pentachlorophenol and TCE and observed a 98% reduction in contaminant concentration following treatment. The low conductivity in the clay soils precludes the percolation of the treatment liquid through these soils, and therefore simultaneous mixing is required. A slight vacuum is applied to a shroud placed over the soil column to capture the off-gas from the process. The air is then channeled through a gas treatment process before release.

There are no known examples where zero-valence metal dehalogenation has been applied to the remediation of soils. Several researchers [including some at Oak Ridge National Laboratory (ORNL)] are testing this technology for the remediation of groundwater contaminated with TCE. This technology was chosen for experiments because of its inherent simplicity. The high water content is expected to have little detrimental effect on this process and may possibly provide assistance. A field-scale application of zero-valence metal dehalogenation would involve the use of the auger to mix iron filings into the soil. The iron is expected to reduce the chlorinated compounds to lesser chlorinated compounds, eventually producing ethylene. An advantage of this approach is that the treatment is not dependent on mixing time. A potential disadvantage may be the evolution of hydrogen gas.

ORNL-DWG 91M-17480RC

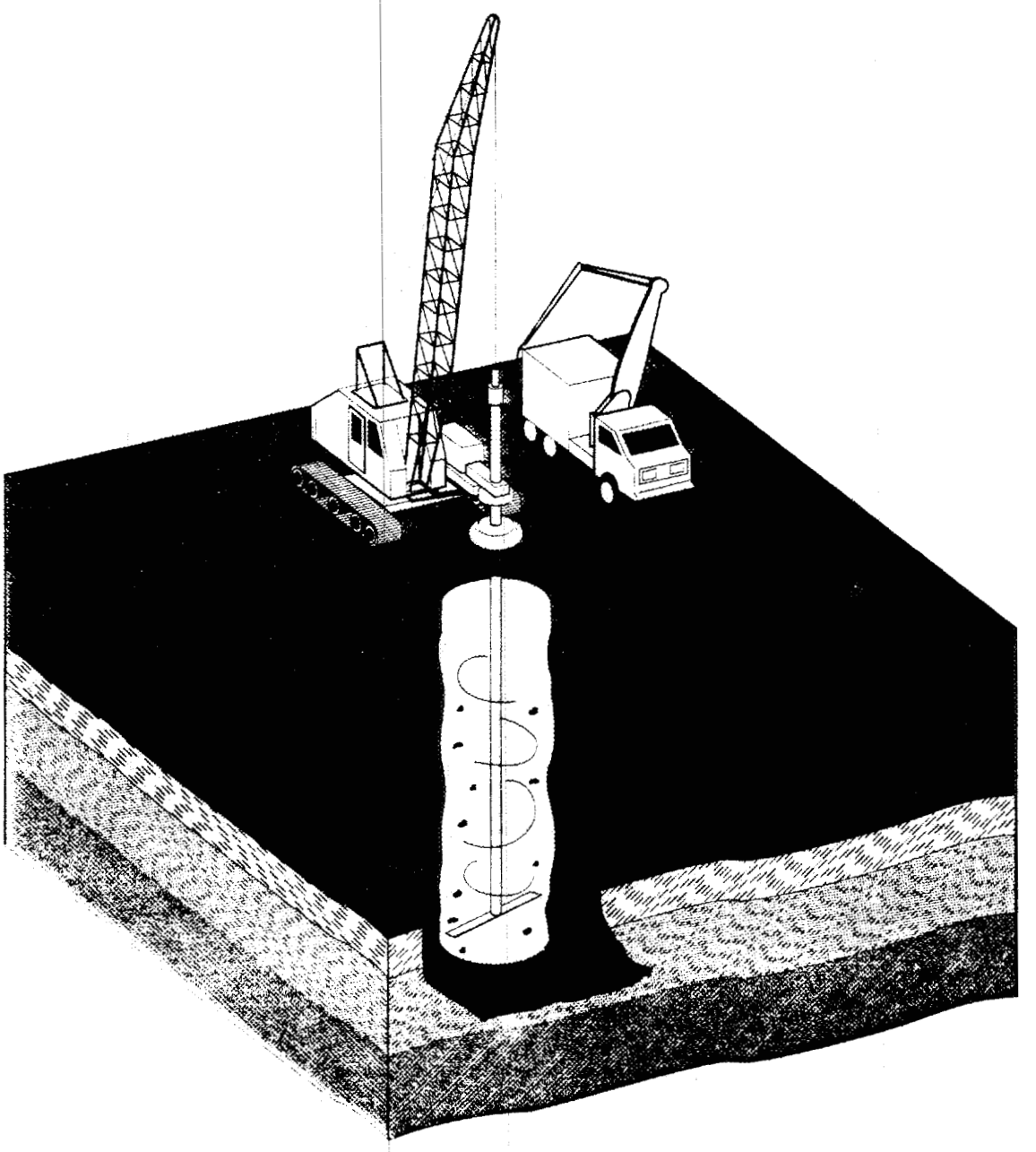

Fig. 1.5. Schematic diagram of a vapor stripping/soil mixing field implementation.

In response to difficulties encountered with the high moisture content of the soils during the vapor stripping experiments, a vapor stripping process enhanced with the addition of calcium oxide (CaO) was developed. When added to the soil, CaO does not react with the organic matter found in the soil or with the contaminants but instead "dewaters" the soil. This process has been used for many years in the construction industry to stabilize soil. A simple reaction with water occurs, forming calcium hydroxide,

$$CaO + H_2O \rightarrow Ca(OH)_2 ,$$

thus removing water from the soil and creating a more easily mixed soil that is more permeable and thus better suited for vapor stripping.

1.3 OBJECTIVE AND SCOPE

The main goal of the study described here was to develop and/or refine a method to achieve high removal efficiencies for VOCs, specifically TCE and DCE, in clay soils at the MAF. This was pursued by simulating treatment processes in the laboratory using intact soil cores that were taken from contaminated areas within the MAF. Experiments with soil cores included ambient and heated-air mixed-region vapor stripping, mixed-region peroxidation, and mixed-region vapor stripping enhanced with CaO. Additional experiments were conducted at bench scale to test the feasibility of treating the soil with zero-valence metal dehalogenation with iron filings.

Much of the equipment and methodologies used in this series of investigations are identical to or only slightly modified from those used for the X-231B Unit. Key differences between the Rinsewater Impoundment site and the X-231B site, such as the higher water and total organic content and higher concentrations of organic contaminants associated with the soil at the impoundment, led to additional laboratory experiments, including the addition of CaO to overcome difficulties caused by the high water content.

2. EXPERIMENTAL APPROACH

2.1 INTRODUCTION

Most of the experiments described in this section were performed on undisturbed soil cores (8-in. diam by 24 in. long) that were collected from contaminated zones from beneath the Rinsewater Impoundment site at the MAF. Pretreatment and post-treatment characterizations of these soil cores were used to determine the effectiveness of the various treatment technologies, all of which included soil mixing. Sample disturbance was minimized by collecting the soil cores in sampler liners that were designed to adapt as reaction vessels. This practice allowed the treatment technologies to be tested on soil that was close to *in situ* conditions.

The experiments testing the feasibility of zero-valence metal dehalogenation were conducted at bench scale using noncontaminated soil spiked with TCE. This approach allowed more precise control of variables such as TCE concentration, water concentration, and iron distribution.

2.2 MATERIALS

2.2.1 Description of Reaction Vessel and Treatability System

A schematic of the treatability system for the experimental studies is shown in Fig. 2.1. The system's main components are (1) the reaction vessel, (2) a mixer equipped with a hollow mixing shaft through which air and liquids are injected into the soil core during mixing, (3) a 1/4-in. stainless steel tube used to inject CaO at various levels in the soil core, (4) air and vacuum sources, (5) a furnace for heating the air, (6) a flame ionization detector (FID) to provide real-time measurements of the total hydrocarbons in the off-gas, and (7) an off-gas sampling system used to quantify specific hydrocarbons in the off-gas. The total hydrocarbon concentration of the off-gas is assumed to be a reasonable indicator of the level of VOCs being removed from the treated soil.

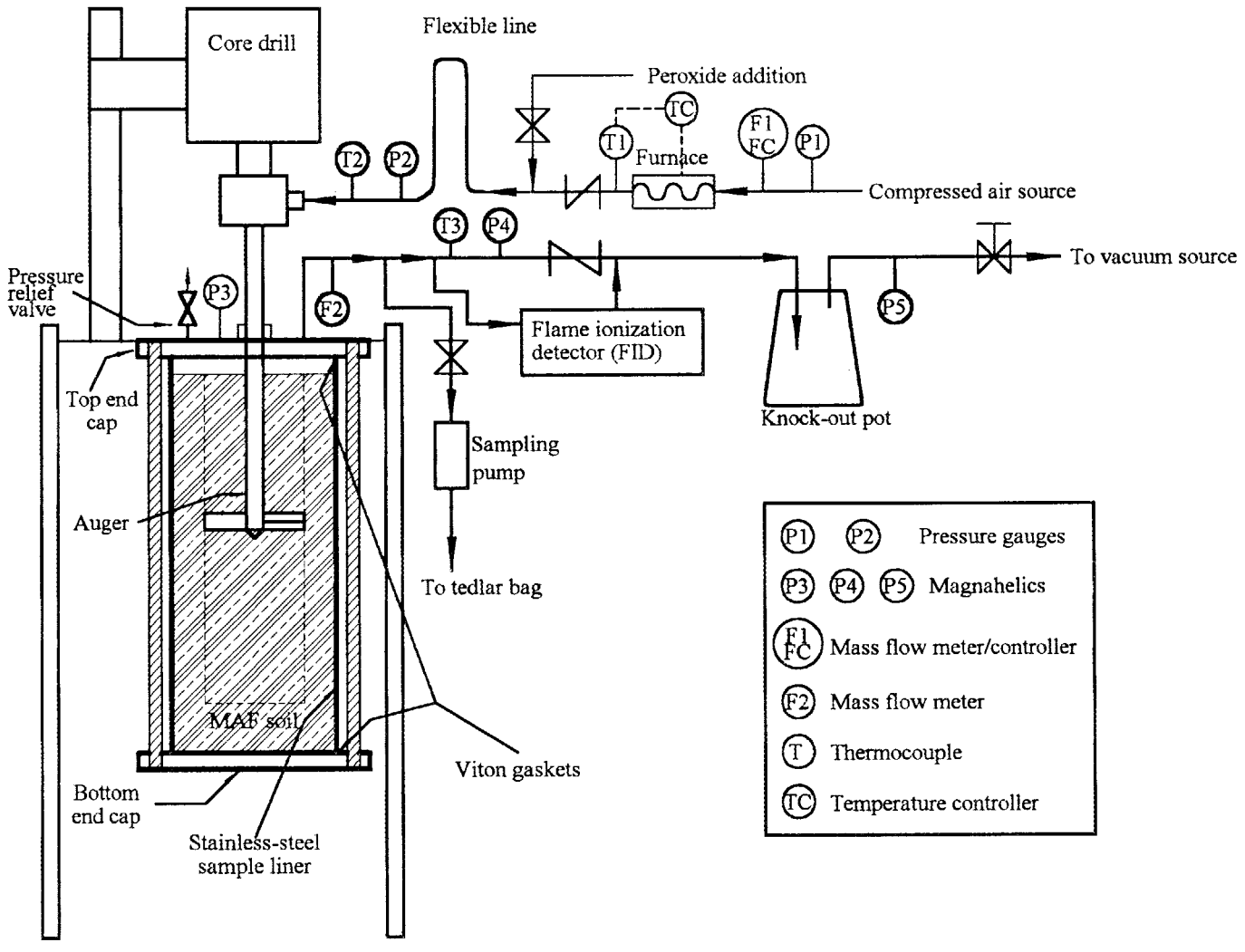

Fig. 2.1. Schematic of experimental system for treating soil cores.

The reaction vessel consisted of a stainless steel sampler liner and stainless steel end caps. The caps were attached to the sampler liner using threaded rods that were screwed on to the top and bottom end caps, with the sampler liner set between them. Prior to each experimental trial (each core sample), 6 in. of soil was removed from the top of the soil column and 1 in. was removed from the bottom of the core. The top end cap was eventually replaced in the laboratory with a transparent Plexiglas™ cap to allow visual observations of the mixing process. Viton™ gaskets were placed between the cylinder and the caps to provide proper sealing. The experimental system was constructed inside a fume hood to prevent hazardous fumes generated during the experimental run from escaping into the building atmosphere. Temperature, flow, and pressure indicators were installed at various locations along the system, monitored throughout each experimental run, and recorded using a chart recorder. The FID sampling line was connected to the off-gas line close to the outlet port on the cap of the reaction vessel. A sampling pump pulled a small fraction of off-gas flow through the FID for analysis. This system is similar to the apparatus used to conduct treatability studies with soil taken from the X-231B site in Portsmouth (West *et al.*, 1993) and was designed to accomplish the following experimental objectives: (1) to perform simultaneous soil mixing and injection/extraction of ambient or heated air into the soil core; (2) to monitor temperature, pressure, and flow rate of air injected into the soil core; (3) to add reaction chemicals to the soil; and (4) to monitor the hydrocarbons in the effluent gas with an FID and by gas chromatograph (GC).

The mixer consisted of a heavy-duty Milwaukee drill motor (Model 4090, 15-amp capacity, 120 VAC, drill rotation speed range = 375 to 750 rpm) mounted on a Milwaukee drill stand (Model 4125, with 28-in. spindle travel). The drill motor was equipped with a swivel joint, a type of linkage between the drill motor and the drill bit that allowed the injection of fluids from a stationary delivery system to a rotating drill bit. During the treatability studies, ambient or heated air was delivered to the soil cores through the swivel joint.

The auger consisted of four blades made of 1/8-in. stainless steel plates and a drill bit welded to a ~28-in. piece of stainless steel tubing (1/2-in. OD by 1/8-in. wall thickness) (Fig. 2.2). The blades were machined to produce saw-toothed forward edges and were inclined at ~30° with one pair of blades positioned above the other pair and inclined in a direction opposite to that of the lower pair of blades. The lower set of blades cut into the soil during downward movement of the mixing shaft, while the upper blades kept the soil from being lifted during upward movement of the shaft. Perforated 1/8-in.-ID pipes were welded to the lower blades through which air was delivered to the soil. This design produced a total instantaneous mixed region with a thickness and diameter of ~2.5 and 5 in., respectively.

2.2.2 Collection and Handling of Soil Cores

The intact soil cores were collected from soil borings that were drilled into the northern side of the Rinsewater Impoundment area at MAF using an 8-in. hollow-stem auger with a center bit. The cores were collected from these borings using a split-spoon sampler fitted with 8-in.-OD, 24-in.-long stainless steel sampler liners. These liners became part of the reaction vessel (Fig. 2.1) and eliminated the need to extract the soil from the liners prior to treatment.

During characterization activities conducted in 1988 and 1989, concentrations of VOCs, including TCE, DCE, and VC, were found up to several hundred milligrams per kilogram in the first 4 ft below the Rinsewater Impoundment concrete liner (Figs. 1.2 through 1.4). Although soil samples from previous characterizations had not confirmed high concentrations of organics at greater depths, groundwater samples taken at 10 ft indicated high concentrations of organics at that depth. This information and other characterization data were used to determine the locations of boreholes for this sampling activity. Several boreholes were drilled, and a total of 12 soil cores were taken. Figure 2.3 shows the approximate sampling locations used to obtain soil cores for this study.

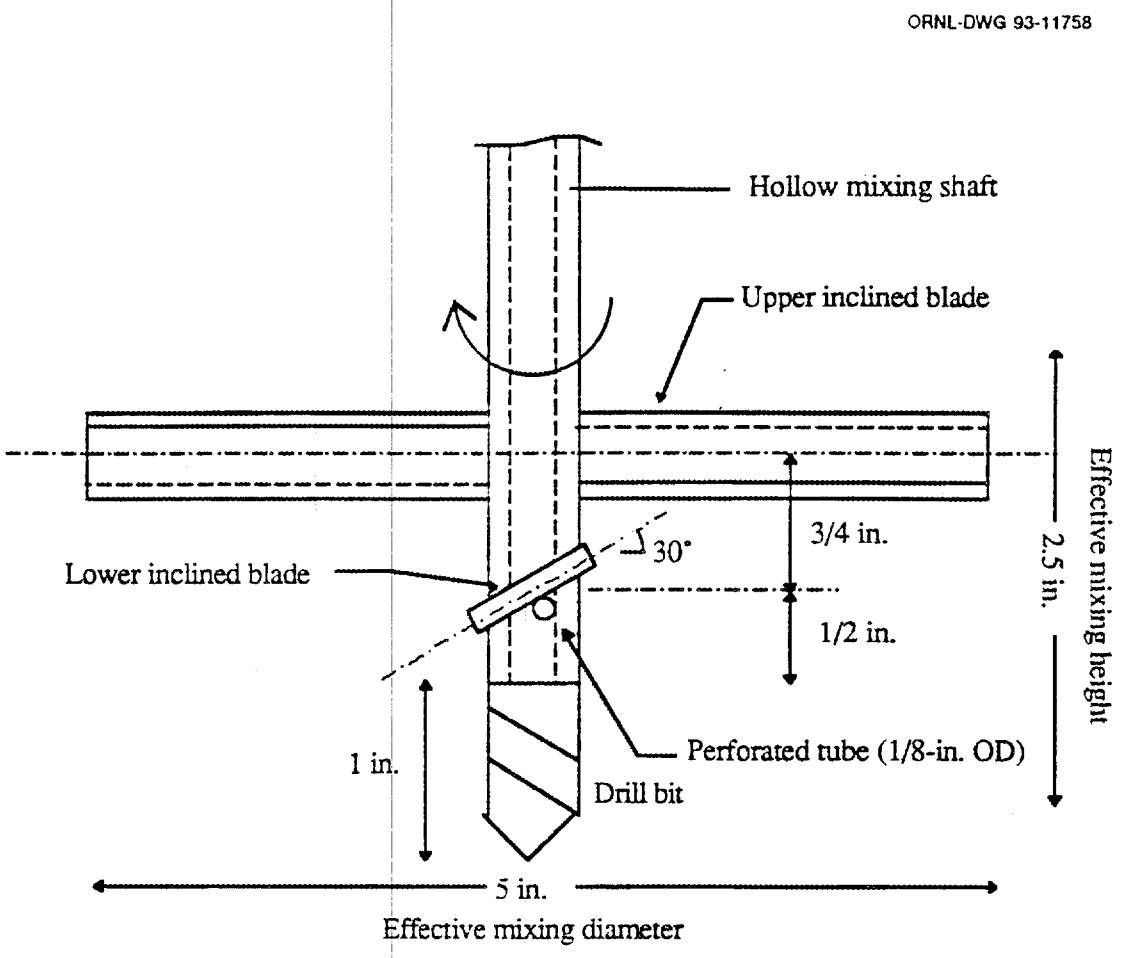

Fig. 2.2. Mixing blade design.

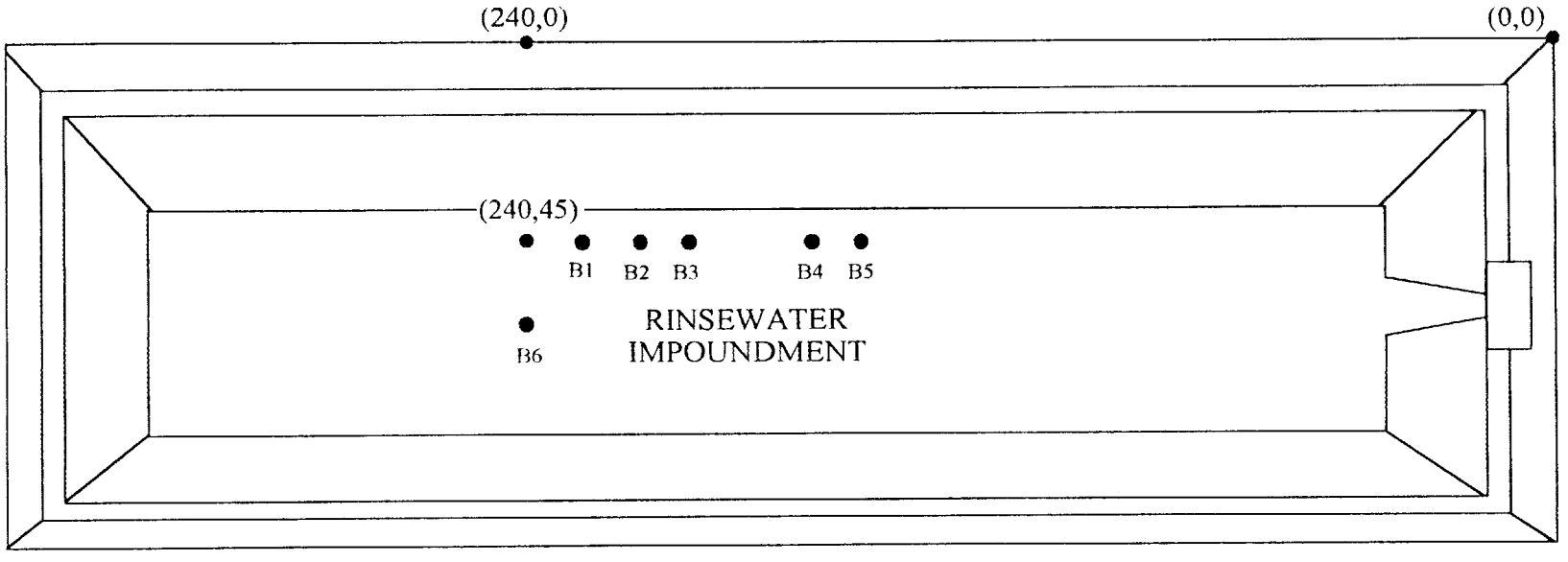

BORINGS	COORDINATES
B1	(220,45)
B2, B2A, B2B, SB2A	(200,45)
B3, B3A	(180,45)
B4, B4A	(135,45)
B5, B5A	(115,45)
B6	(240,65)

NOT TO SCALE

Figure 2.3. Approximate rinsewater impoundment boring locations.

The initial plan had been to obtain ten core samples; however, in anticipation of difficulties that might be encountered with the high moisture content, it was decided that an additional two core samples should be taken.

The basic mechanism by which soil cores were collected consisted of (1) removing the concrete liner of the impoundment so that soil could be reached, (2) augering to the required depth, (3) checking the breathing zone concentration of VOCs and the concentration in the borehole, (4) noting the type of soil found in the borehole, (5) pushing the sampler 2 ft to obtain the soil core, (6) checking the concentrations of VOCs in the borehole, (7) checking for recovery, (8) placing the soil sample under cold storage (4° C), (9) continuing to greater depths if there was recovery and a sufficient indication of VOCs, and (10) moving to a new location. Due to difficulties recovering samples, additional boreholes were often required to obtain the samples. The details of the sampling activity are kept on file in the Engineering Development Section in the Chemical Technology Division at ORNL as "Rinsewater Pond—Field Notes." All soil cores were sealed and kept in cold (4° C) and shipped to ORNL by Federal Express at the end of the sampling period. Three sampling periods were conducted, staggered at approximately 2-week intervals to help reduce the time samples would be stored prior to experiments. Sampling was begun on August 8, 1994, and completed on September 14, 1994.

2.3 PREPARATION OF SOIL CORES FOR EXPERIMENTS

Cores were prepared for experiments in an ambient-temperature laboratory environment adjacent to a laboratory hood to minimize the hazards encountered from breathing the organics volatilizing from the soil. This precaution was taken due to the potential health hazard caused by volatilization of the organics. Preparation of the cores normally took 1 hour per core including the following activities: (1) removing the seals that were placed on the core after it was collected in the field, (2) adding a layer of sand to the bottom of the core (this was not done in all cases because the sand addition was to aid in dewatering the core), (3) placing a metal screen and the bottom end cap on the

bottom of the core, (4) returning the core to an upright position, (5) removing soil from the top of the core to create sufficient headspace for the auger blades and for soil expansion, (6) obtaining soil samples for pretreatment characterization, and (7) installing the top end cap. The mixer shaft was inserted through the top cap before the latter was attached to the reaction vessel. With the end caps installed and the mixer shaft plugging the hole in the top cap, the soil core was effectively sealed again. The reaction vessel was then installed into the treatment system (Fig. 2.1).

Pretreatment analysis of the soil indicated that levels of VOCs were comparable to field levels and that preparation of the cores in the laboratory hood did not markedly alter the VOC content of the sample (several pretreatment concentrations of TCE were several thousand milligrams per kilogram). Adequate amounts of TCE were retained so that the efficiency of treatments could be determined. Soil cores were sampled immediately prior to treatment to ensure accurate determination of treatment efficiencies.

2.4 SAMPLE COLLECTION AND ANALYTICAL METHODS

Three to four pretreatment and post-treatment soil samples were collected from the center of the soil cores with a 3/4-in.-diam stainless steel sample probe core prior to the beginning of an experiment. Post-treatment samples were taken from the mixed soil immediately after a treatment run.

Approximately 5 g of soil was placed in a preweighed 40-mL sample vial containing a known amount of hexane. The samples were allowed to extract overnight on a rotator. Approximately 1.5 mL of the hexane phase was then pipetted into a 2-mL autosampler vial and sealed with a crimp-type septum seal. The vials were then placed on the autosampler tray for a Hewlett Packard (HP) Model 7673A automatic sampler/injector. After extraction the hexane phase was analyzed using an HP 5890 GC equipped with an electron capture detector. Separation was achieved with an AT A-624 60-m by 0.53-mm-ID capillary column with 1-μm film thickness (Alltech, Inc.). The response of the detector was plotted and integrated with a HP model 3396A recording integrator. The integrator was programmed

to calculate the concentration on the target organics based on calibration with known standards. Chromatograms were stored on an IBM-compatible personal computer through the use of HP Peak-96 Information Manager software.

The GC was calibrated using standards prepared from certified standards purchased from ACCUSTANDARD. The standards were diluted with hexane to make calibration standards in the concentration range of 100 to 200,000 μg/L for TCE and *cis*-DCE and 100 to 2000 μg/L for *trans*-DCE. The final concentrations were adjusted based upon the weight of the soil sample extracted.

During experiments gas samples were collected in 2-L Teldar™ bags and transferred to the laboratory where they were analyzed for specific hydrocarbons using the GC described above but without an autosampler. Samples were obtained using 25-μL gastight syringes. The syringes were rinsed with hexane and then purged with air to ensure that no cross-contamination occurred between uses. Ambient air blanks were also tested periodically to verify that no cross-contamination occurred between uses. The integrator contained a program to calculate the concentrations based on runs with known standards. The calibration standards were prepared from the certified standards described previously.

2.5 TREATMENT PROCEDURES/METHODS

All the treatment methods tested were based on soil mixing to overcome the low permeability of the clay soils. Eleven MAF soil cores were treated during this study using four treatment methods. One core was saved for potential use in a future ORNL project funded by the Department of Energy (DOE). The soil cores were treated in increments or mixing zones, as shown in Fig. 2.4. The basic treatment operation mixed the first zone from top to bottom and left the mixer blades in a stationary vertical position (within the zone) while air was continuously injected into the soil and extracted from the reaction vessel headspace. During mixing and air injection, the VOC or hydrocarbon content of the off-gas was monitored by the FID.

ORNL-DWG 93-11759

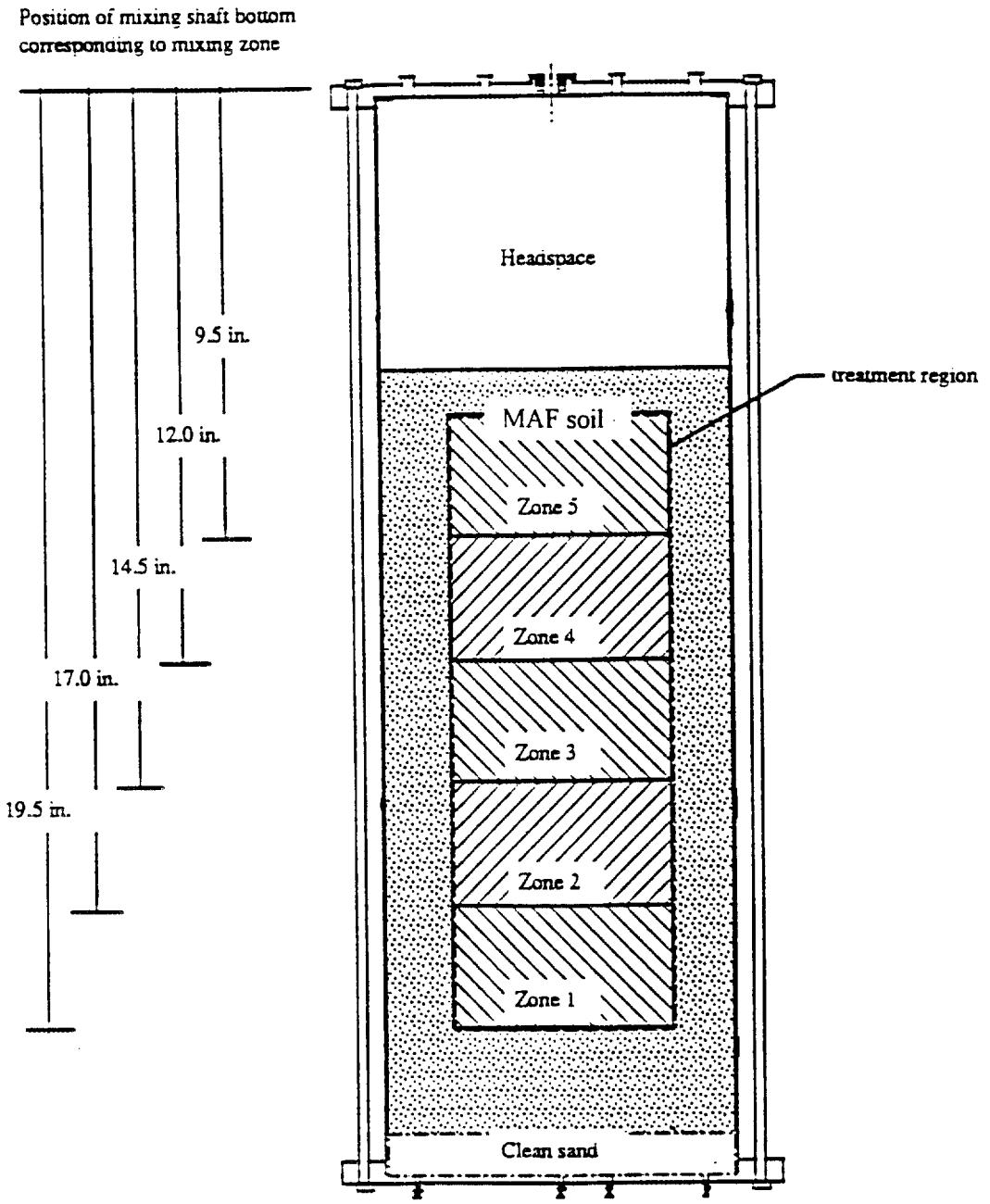

Fig. 2.4. Mixing zones in a soil core.

When the FID reading reached a peak, a gas sample was taken; when the FID reading dropped to a low level, the mixer shaft was moved to treat the next mixing zone. This process continued until the bottom mixing zone was reached. FID readings were monitored as the mixer blade was moved upwards, zone by zone, to the top of the soil core.

Attempts were made to correlate total hydrocarbon concentrations as measured by the FID attached to the off-gas stream with the GC analyses of the air samples. This correlation was not possible because the high concentrations of hydrocarbons measured in the extracted gas stream often exceeded the limits of the FID. Therefore, FID readings were used as a gross indication of the amount of total hydrocarbons present in the off-gas stream.

2.5.1 Vapor Stripping

As the soil was mixed, ambient or heated air was injected through the auger blades to strip the organic contaminants from the soil. The flow rates used for all vapor stripping tests were approximately 60 L/min. Soil core B-4 (8 to 10 ft) was tested with ambient air, and B-4A (7 to 9 ft) and B-3A (6 to 8 ft) were tested with heated air. Physical limitations caused by the high water concentration in the soil prevented permeation of the soil by air and thus limited the efficiency of vapor stripping.

Two vapor stripping experiments, cores B-5 (8 to 10 ft) and B-6 (6 to 8 ft), were conducted by simulating "dewatering" of the soil core prior to initiating mixing and airflow. Approximately 750 g of sand was added to the bottom of the core, and a filter flask was attached to the bottom of the core and to a vacuum pump. Attempts made to dewater the soil cores by this method were not successful. Approximately 800 mL of water was collected from core B-5 over a 2-day period; this was insufficient moisture removal to allow proper mixing of the soil and permeation of air for removal of volatiles. The method removed no water from core B-6 (6 to 8 ft), and the attempt to dewater was halted so that the soil core could be used in another treatment scheme.

2.5.2 Peroxidation

An attempt was then made to test core B-6 (6 to 8 ft) using peroxidation, but the water swivel on the drill failed during the initial stages of the experiment, preventing useful data from being obtained. Soil cores B-2A (10 to 12 ft) and B-2B (5 to 7 ft) were treated with approximately 500 mL of 15% H_2O_2. The H_2O_2 was injected through each mixing zone for both cores. A small flow rate of air (approximately 10 L/min) aided injection of H_2O_2 through the auger, minimized the dead space in the system, and ensured that the total volume of H_2O_2 was delivered to the soil.

2.5.3 Calcium Oxide Addition

Soil cores B-6 (8 to 10 ft), B-3 (6 to 8 ft), SB-2A (4 to 6 ft), and B-5A (6 to 9 ft) were treated with CaO to enhance the vapor stripping by dewatering the soil. Approximately 100 g of CaO was added to each mixing zone (2.0-in. increment) in the soil core and mixed to aid in the removal of excessive moisture. The airflow rates were reduced to approximately 20 L/min during the addition of CaO, and the auger was raised from the mixing zone. After addition of the CaO, the airflow rate was increased to 60 L/min and the auger brought back into the mixing zone to ensure distribution of the CaO throughout the zone. Rotor speed remained approximately 120 rpm. The physical characteristics of the soil after these treatments indicated a much drier soil and one through which air could be flowed and thus VOCs could be air stripped. During experiments with cores B-6 and B-3, a suitable delivery and distribution system was designed and tested for the CaO. Results from cores S-B2A and B-5A are expected to be more representative of the process.

2.5.4 Zero-Valence Metal Dehalogenation

Noncontaminated soil from MAF was spiked with TCE to conduct these experiments. The experiments were conducted using zero-headspace extractors (ZHEs) similar to those used for the bench-scale peroxidation experiments for the Portsmouth project (Gates *et al.*, 1993). A photograph of the

extractor is shown in Fig. 2.5. Each set of experiments consisted of two controls and two treatments. In the "Control" runs, 10 g of dry Michoud soil was mixed with 10 g of clean sand. In the "Treated" runs, 10 g of dry Michoud soil was mixed with 10 g of iron filings (Fisher brand). The soil/sand or soil/iron mixtures were placed into ZHEs. Twenty milliliters of water saturated with TCE was added to each of the ZHEs. The ZHEs were sealed, pressurized up to 10 psi, and tumbled for several days. On the final day, 50 mL of hexane was added to each ZHE to extract TCE from the soil slurries. The ZHEs were then tumbled for 4 hours, and ~5 mL of hexane was withdrawn from each ZHE. These extracts were then analyzed on a GC/electron capture detector.

3. RESULTS

3.1 PHYSICAL OBSERVATIONS

The following discussion highlights various experiences during developing and testing methods to remove VOC contaminants from the clay/peat type soil found under the Rinsewater Impoundment at MAF. This information will make it easier to understand and interpret the quantitative results presented later.

The high moisture content of the soil made the mixing process difficult for the initial experiments. The soils had the consistency of sculpting clay, and the mixing process seemed to cause a paste to form. This problem became apparent with the first experiment conducted. During the first run, conducted on core sample B4, the airflow rate was set to 56 L/min. FID readings indicated that some organics were leaving the soil core but not to the extent anticipated from previous results (West *et al.*, 1993). When the auger was lifted from the core, it was noted that the areas of the core that should have been mixed looked identical to the unmixed regions and that the entire core was muddy.

After the first vapor stripping experiment, ambient air was replaced by heated air. It was anticipated that the heated air might help remove some of the moisture from the soil.

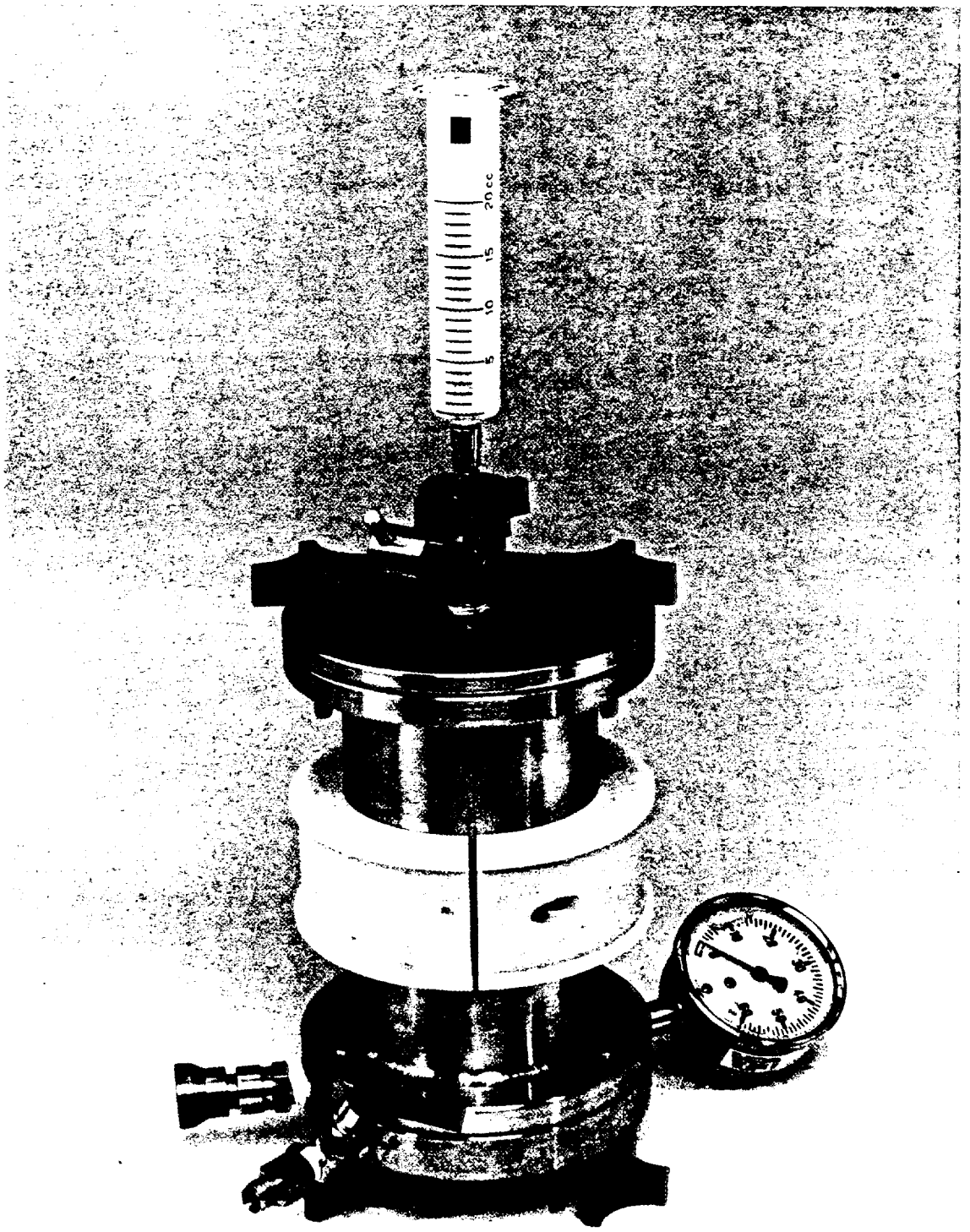

Fig. 2.5. Zero headspace extractor.

For the second experiment, conducted with core B-3A, heated air was created by utilizing the heating tapes and furnace on the apparatus. Mixing began at 9.5 in., where FID readings were low. As the auger was lowered into the soil core at 2.5-in. increments, gas samples were taken along with FID readings. FID readings showed low levels of organics escaping from the soil with little change in readings as treatment progressed, indicating poor VOC removal from the soil core. After approximately 3.5 hours of treatment, the auger was lifted from the soil; the off-gas system was found to be plugged. After 2 additional hours of treatment, the soil core was still the consistency of mud, and there was no indication that permeation of the soil by air had occurred, although the FID readings remained near the maximum limit of the scale. The decision was made to try dewatering the soil and to begin experiments testing treatment with H_2O_2.

For the next experiment a vacuum pump was attached to the bottom of core B-5 (8 to 10 ft) to dewater the soil. Airflow rates during the experiment were increased to 76 L/min. During this time FID readings oscillated from peak values in the 80s to below recording limits. Although approximately 800 mL of water was removed from the core during dewatering, the soil still clumped around the auger during the experiment and was not amenable to vapor stripping.

For the next soil core, B-6 (6 to 8 ft), an attempt was also made to dewater the core. No water was removed from the core, and the experiment was halted. This run indicated that additional efforts were needed to dewater the soil prior to or during treatment. The decision was made to switch to peroxidation experiments while other methods of removing the water were investigated. Hydrogen peroxide, 15% at the rate of 100 mL per 2.5 in. of soil, was added to the B-6 core. Problems were encountered with the water swivel seal on the drill motor, and the experiment was halted.

Core sample B-2B (5 to 7 ft) was loaded into the treatment apparatus, and 15% H_2O_2 was metered to the soil at each mixing zone for a total column addition of 500 mL. Treatment of the entire soil core occurred without problems. Core sample B-2A was also treated with the addition of 15% H_2O_2.

The H_2O_2 added moisture to the core during treatment, and visual inspection of the core showed a watery mud.

For the next experiment CaO was delivered to core B-6 through a modified auger while vapor stripping. After the conclusion of the experiment, observations of the soil showed it to be drier than it was prior to the addition of CaO. However, the design of the delivery system required modification to improve the distribution of the CaO throughout the soil core.

Soil core B-3 was prepared and CaO added through an auger with the original design. When visual observations indicated "muddy" or "paste-like" soil, additional CaO was added. Problems were encountered with ports on the auger clogging with CaO, and the decision was made to discontinue injection of CaO through the auger. Another design modification was deemed necessary for the delivery system for CaO. The new system was designed to deliver CaO through a stainless tube independent of the auger and the vapor stripping airflow. The new delivery system for CaO was applied by reducing the airflow rate from approximately 60 to 20 L/min, injecting 100 g of CaO, mixing the CaO and soil at the surface, returning the auger to the previous depth, and returning the airflow rate to it previous value of 60 L/min. During this run, 100 g of CaO was added at each 2-in. increment to a depth of 19.5 in. FID readings were observed and often went off-scale. After the experiment was completed, visual observations of the soil core indicated the surface of the core contained small clods of soil that would crumble when mashed. The center of the core was significantly drier than in previous runs, and the unmixed soil on the sides and bottom of the core was the consistency of molding clay, which was a significant improvement over previous experiments.

Sample SB-2A (4 to 6 ft) was treated as the core was in the previous experiment. The FID continually remained off-scale. Soil characteristics after treatment were similar to those observed for soil core B-3. The last experiment conducted used soil core sample B-5A. Conditions were similar to

those of the previous run. Delivery of CaO occurred in the same manner as with sample SB-2A. Gas samples were collected at nonspecified intervals due to the fact that the FID was not functioning.

In summary, air stripping and heated-air stripping used alone and combined with simple physical mechanisms to dewater the soil were not effective and did not produce desired results. Peroxidation treatments add moisture to the soil, also producing unacceptable results. Although these methods have been proven at other sites, the soil characteristics after treatment at MAF would not be acceptable. The addition of CaO to the very moist soil has yielded extremely promising results. This methodology does seem to greatly increase the permeability of the soil, which helps the vapor stripping process.

3.2 TREATMENT EFFICIENCIES

3.2.1 Soil Cores

Substantial concentrations of TCE and *cis*-1,2-DCE were measured in most of the cores tested. Concentrations of *cis*-1,2-DCE generally have been as high as or higher than TCE concentrations, with much lower concentrations measured of *trans*-1,2-DCE. VC was detected in only three samples (approximately 1 mg/kg), and treatment efficiencies could not be determined. Table 1 shows a summary of the average pretreatment and post-treatment concentrations for the experiments with the corresponding treatment efficiencies. Each treatment method tested appeared to be capable of removing a fraction of the organics present, although there was still a significant amount of the organic contaminants remaining in the soil after treatment. Ambient or heated-air vapor stripping treatments were the least effective treatments. Physical methods of dewatering the soil did not improve the removal efficiency of the organics.

Figure 3.1 shows a comparison of average pretreatment and post-treatment concentrations for TCE, *cis*-1,2-DCE, and *trans*-1,2-DCE with the standard deviation for the initial vapor stripping experiments. In some cases the average of the post treatment concentrations of TCE was actually higher than that for the pretreatment concentrations, but the scatter in the results overlapped, indicating no

Table 1. Comparison of experimental results for various treatment methods

Average pretreatment and post treatment concentrations (mg/kg) and percent removed listed for each organic

Experiment /core no.	Treatment method	Treatment time (h:min.)	*trans* 1,2 Dichloroethylene			*cis* 1,2 Dichloroethylene			Trichlorethylene		
			Pre	Post	%	Pre	Post	%	Pre	Post	%
1/B4	AVS[a]	2:39	7.4	3.1	58	305	141	54	54	100	-
2/B4A	HVS[b]	1:41	9.4	3.8	60	535	82	85	261	271	-
3/B3A	HVS[b]	4:38	2.0	0	100	624	67	89	1010	1068	-
4/B5	DHVS[c]	4:00	0	0	--	73	27	63	41	31	25
B6(6-8 ft)	No results were obtained due to equipment breakdown										
5/B2B	P[d]	4:00	0	0	--	73	27	63	41	31	24
6/B2A	P[d]	3:44	0	0	--	567	97	83	782	389	50
7/B6(8-10ft)	HVSCA[e]	3:00	1.5	0	100	312	29	91	4.2	.66	84
8/B3	HVSCA[e]	2:26	0.5	0	100	178	6.1	97	1015	93	91
9/SB2A	HVSCA[e]	9:00	2.7	0	100	1371	51	96	3430	1330	61
10/B5A	HVSCA[e]	5:00	0.8	0	100	17	2	88	.06	.02	68

[a]AVS - ambient vapor stripping.
[b]HVS - heated vapor stripping.
[c]DHVS - dewatering, then HVS.
[d]P - peroxidation.

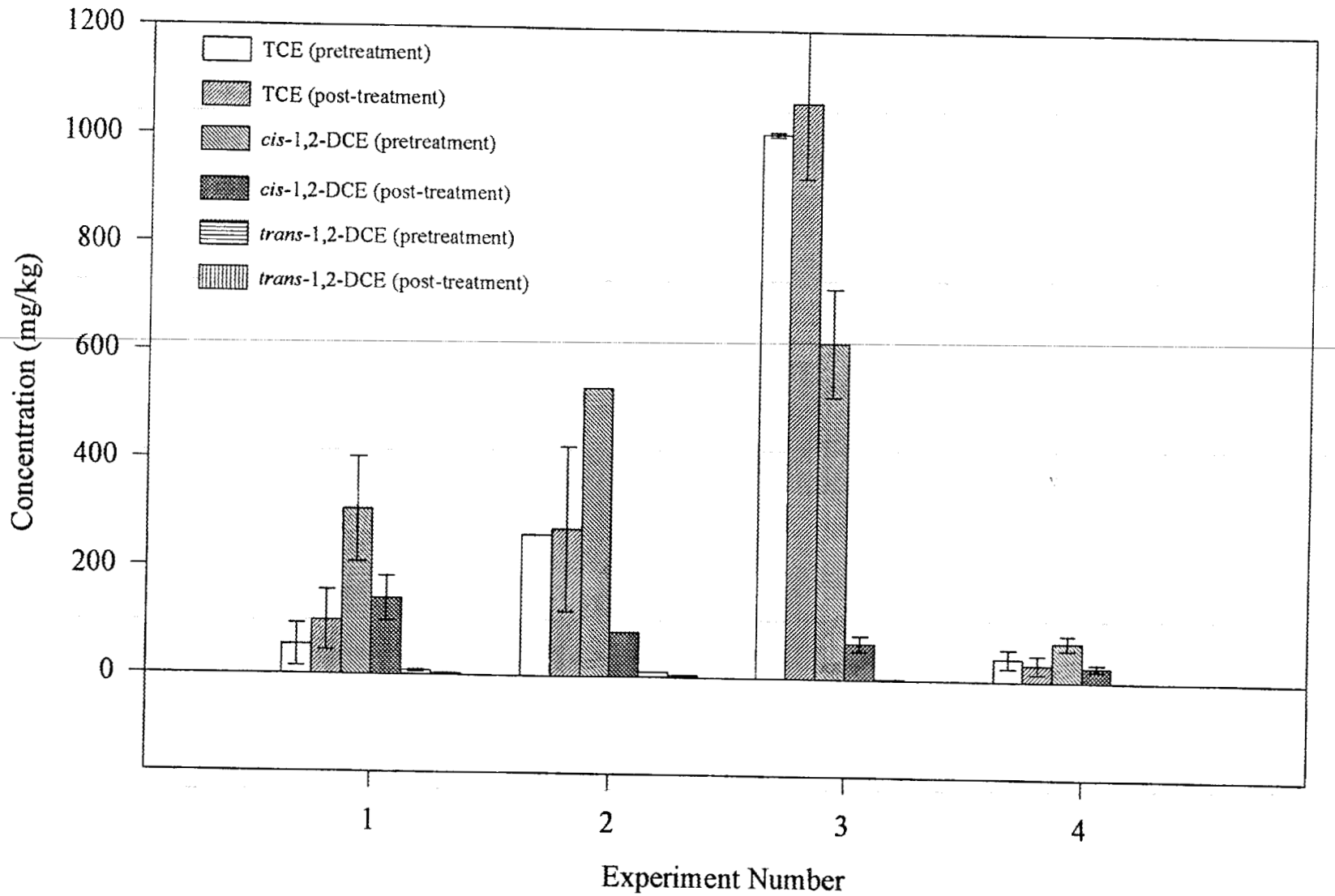

Fig. 3.1. Comparison of average pretreatment and post-treatment concentrations of TCE, *cis*-1,2-DCE, and *trans*-1,2-DCE for vapor stripping experiments. Where available, standard deviations of the average are shown.

removal. In the presence of the large amount of water, vapor stripping alone did not prove to be an effective treatment process.

A summary of the pretreatment and post-treatment concentrations of the organics for the peroxidation experiments is shown is Fig. 3.2. Treatment with H_2O_2 appeared to remove up to 80% of the *cis*-1,2-DCE, and lesser amounts of the TCE, up to 50%. However, the treatment was determined not to be useful at the MAF site due to substantial residual concentrations of organics and unacceptable physical characteristics of the soil after treatment.

The most promising results were obtained from the vapor stripping experiments enhanced with the addition of CaO. As mentioned previously, the CaO reacts with the water to form CaOH, drying the soil in the process. Figure 3.3 shows a summary of the pretreatment and post-treatment concentrations of the organics for these experiments. During the first two experiments, efforts were focused on designing an effective laboratory-scale delivery system to distribute the CaO into the soil. For the final two experiments, the delivery system was operated successfully. The results from the final experiments are expected to be most representative of the process. Treatment efficiencies over the four experiments for *cis*-1,2-DCE were up to 96%, and efficiencies for TCE ranged from 60 to 90%.

A key variable that remains undetermined is the time that will be required to reduce the organics to an acceptable level. Target residual concentrations of 260 mg/kg (EPA Region III Risk-Based Concentration Table, Third Quarter 1994) have been discussed; however, the closure investigation (CH2M Hill Co., 1989) mentions a limit of 1.0 mg/kg.

3.2.2 Zero-Headspace Extractors

The experiments testing zero-valence metal dehalogenation were conducted in zero-headspace extractors, as mentioned previously. Treatment times were varied from 3 to 8 days. Table 2 contains a summary of the results of these experiments. The control concentrations represent the untreated soil.

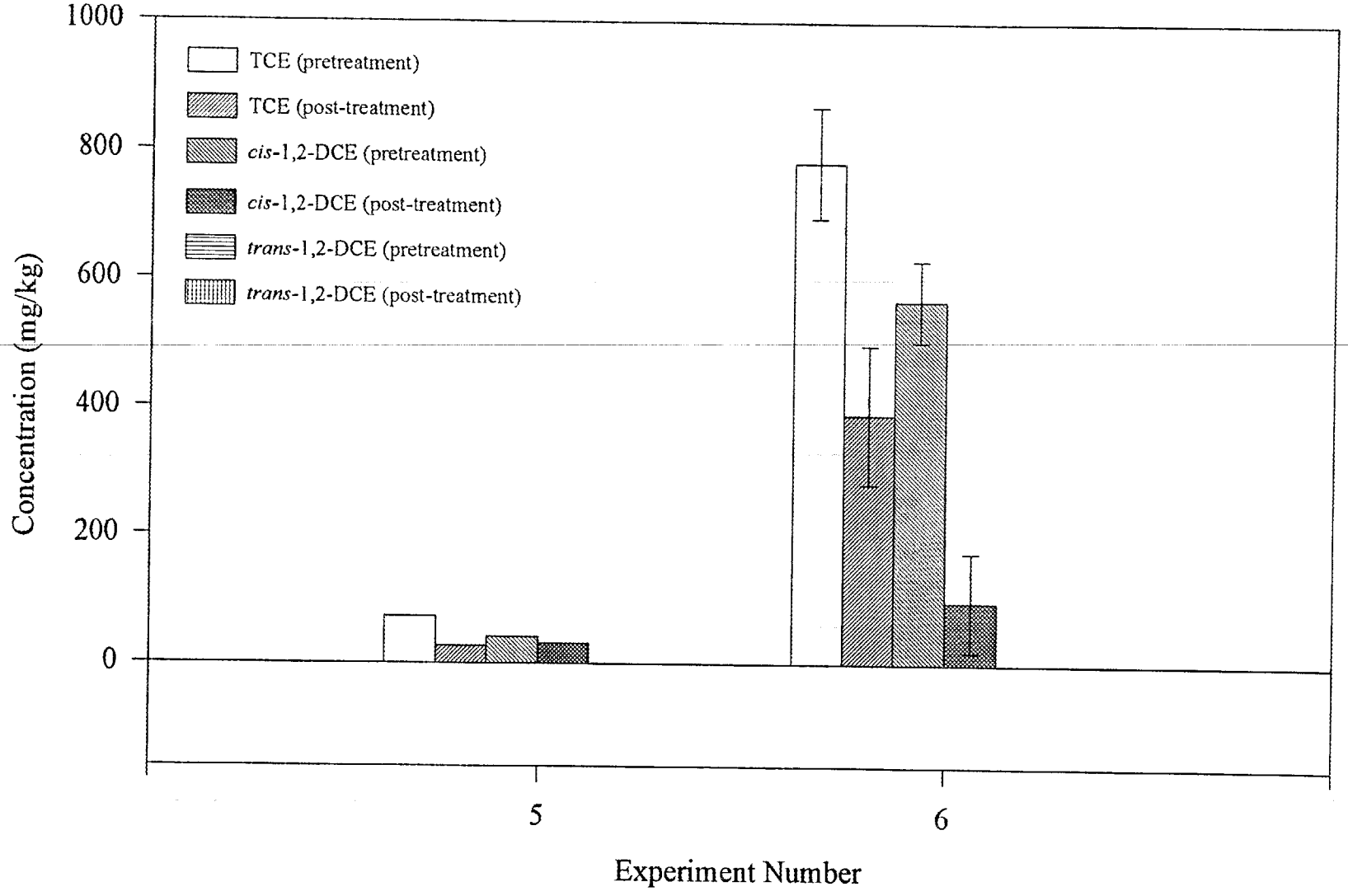

Fig. 3.2. Comparison of average pretreatment and post-treatment concentrations of TCE, *cis*-1,2-DCE, and *trans*-1,2- DCE for peroxidation experiments. Where available, standard deviations of the average are shown.

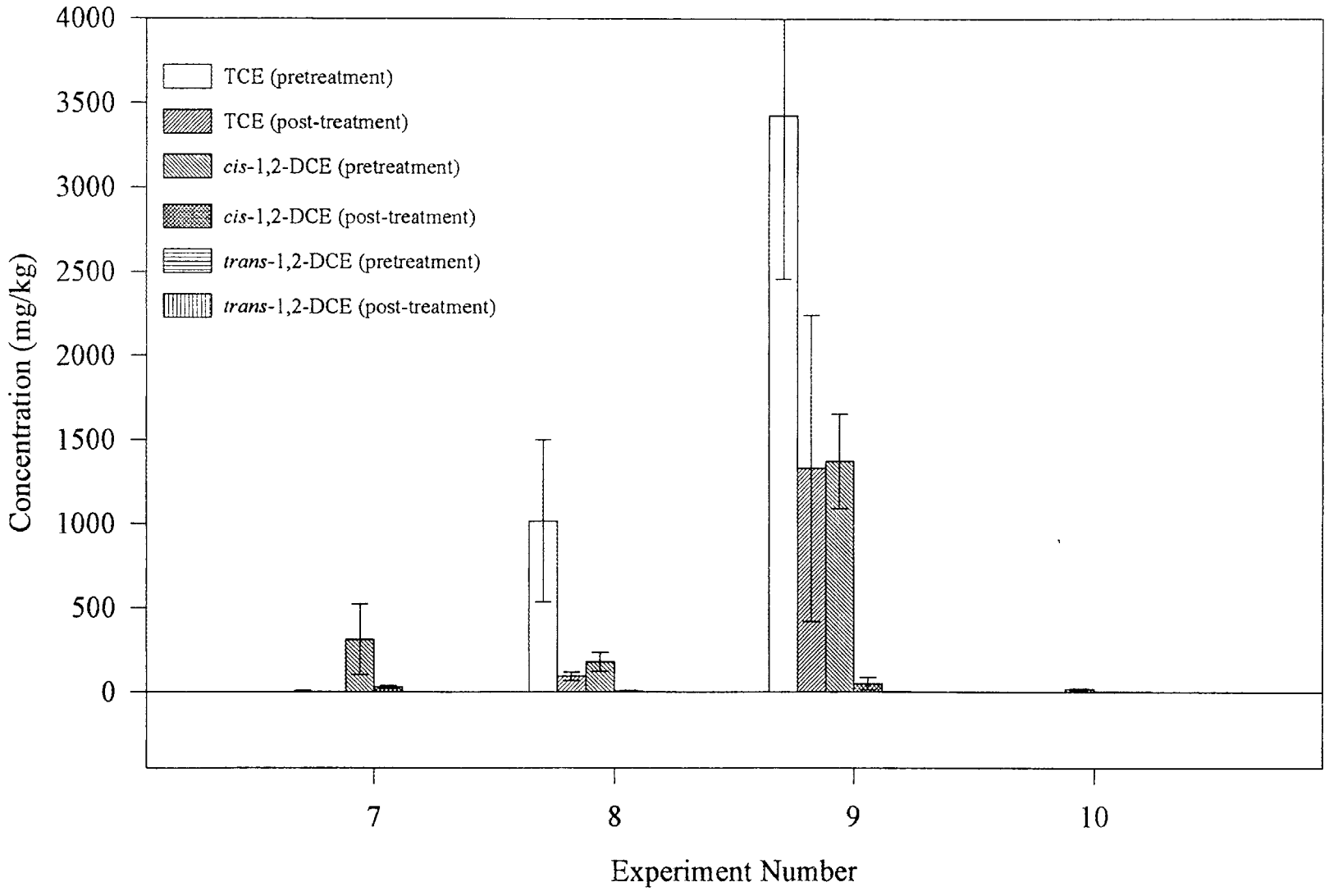

Fig. 3.3. Comparison of average pretreatment and post-treatment concentrations of TCE, *cis*-1,2-DCE, and *trans*-1,2-DCE for vapor stripping experiments enhanced with the addition of calcium oxide. Where available, standard deviations of the average are shown.

Additional experiments were attempted; however, because of equipment malfunctions, useful data were not obtained. Substantial removals of TCE were observed; however, some indications of accumulation of *cis*-1,2-DCE were observed. Although the results were promising with average removal efficiencies of 85 and 98 %, more development is needed to apply the technology at field scale. It is possible that future DOE- funded projects may obtain the needed information.

Table 2. Summary of zero valence metal dehalogenation experiments

Experiment	Treatment Time (days)	TCE concentrations (mg/kg)			
		Treated 1	Treated 2	Control 1	Control 2
1	3	260	640	3000	3200
2	8	16	16	960	730

4. ECONOMIC ANALYSIS

For the purpose of comparison, it has been assumed that the entire rinsewater impoundment site will have to be treated. A final determination of acceptable residual concentrations in the soil and a determination of the portion of the site that will need to be treated will be required for a more accurate cost comparison between various treatments. The remediation of the Portsmouth DOE site at Piketon Ohio (similar in size to the rinsewater impoundment) cost approximately $115 per ton of soil treated (M. I. Morris, ORNL, personal communication to A. J. Lucero, Dec. 7, 1994), not including the costs for the field-scale demonstration. (Note: The costs for the field-scale demonstration were nearly equal to the remediation costs.) If the vapor stripping process (enhanced with CaO addition) were applied to the MAF site, the cost would be expected to be similar to that for Portsmouth plus the costs for CaO, assuming the entire site could be remediated in the same time frame. Using a current cost of approximately $80 per ton of lime delivered (John Compton, Tenn Luttrell Company, personal communication to A. J. Lucero, Dec. 1, 1994) and a 20% lime-to-soil loading, the estimated cost for

remediation of the rinsewater impoundment site would be approximately $131 per ton of soil treated. The key factor in estimating these remediation costs is the time that will be required to reduce the residual concentrations of the organics to an acceptable level. This estimate compares favorably to an estimate of $150 per ton for on-site incineration provided by GDC Engineering, Inc., Baton Rouge, Louisiana (see the Appendix).

ORNL personnel have developed a preliminary estimate of the costs for a field-scale demonstration of three technologies applicable to the MAF site: mixed-region vapor stripping enhanced with CaO, zero-valence metal dehalogenation, and oxidation with potassium permanganate ($KMnO_4$). Additional DOE-funded projects at ORNL will be testing the latter two technologies. Assuming that ORNL personnel are responsible for obtaining all contracts associated with the demonstration and that MMMSS personnel obtain the necessary permits, the total estimated cost for a demonstration of the three technologies is $1.9 to $2.3 million [$2.4 million if funded through an Interdivisional Operations Directive (IDOD)]. The demonstration at Portsmouth cost approximately $3.4 million including the laboratory studies. Factoring in the potential costs of a field-scale demonstration at MAF for the enhanced mixed-region vapor stripping process, the total remediation costs for the site could rise to as much as $200 per ton. Information for a detailed estimate of the potential costs for a full-scale remediation using zero-valence metal dehalogenation or using $KMnO_4$ oxidation is unavailable at this time.

5. CONCLUSIONS

Five *in situ* technologies were tested to treat the organics in the soils at MAF. These included mixed-region vapor stripping with ambient or heated air, peroxidation, zero-valence metal dehalogenation with iron filings, and vapor stripping enhanced with the addition of CaO. Of these technologies, only two appear to be capable of reaching treatment goals at MAF; these are zero-valence metal dehalogenation and mixed-region vapor stripping enhanced with the addition of CaO. Treatment

using zero-valence metal dehalogenation appears promising but will require much additional testing and development prior to attempting a field-scale application. The enhanced mixed-region vapor stripping process appears to be capable of achieving the treatment goals at MAF; however, additional tests are needed to determine the time required for treatment, a factor that may significantly influence the cost of the process.

6. RECOMMENDATIONS

The enhanced mixed-region vapor stripping process needs further evaluation to provide additional information supporting the treatment capabilities and cost-effectiveness of the process. It is recommended that four additional cores be obtained from the areas of higher concentration at the Rinsewater Impoundment site. These cores will be used for a study to determine the time required to reduce the organic concentrations to a specified residual concentration. The cost for these tests is estimated to be $36.5K, assuming they are funded through an IDOD. The estimate is based on 1.5 full-time equivalents (FTEs) for a technician and 0.75 FTE for an engineer at current fully burdened rates plus a 20% tax placed on the funds from DOE. A 90% report will be submitted 7 weeks from receipt of the samples (assuming funding is in hand and personnel are available). The final report will be submitted 1 week following receipt of comments from MMMSS. It is also recommended that MMMSS personnel simultaneously obtain detailed estimates for on-site incineration of the soil. With a definite target concentration of residual organics, the results from these studies can then be used to estimate the cost-effectiveness of the enhanced vapor stripping process and to determine if a field demonstration of the soil mixing treatment processes is warranted.

7. REFERENCES

CH2M Hill Co. 1989. *Field Investigation and Contaminant Assessment Rinsewater Impoundment and Appurtenant Structures at Michoud Assembly Facility*, New Orleans, Louisiana.

CH2M Hill Co. 1990. *Supplemental Closure Investigation Field Investigation and Contaminant Assessment Rinsewater Impoundment and Appurtenant Structures National Aeronautics and Space Administration at Michoud Assembly Facility*, Baton Rouge, Louisiana.

Gates, D. D., and R. L. Siegrist. 1993. *X-231B Technology Demonstration for In Situ Treatment of Contaminated Soil: Laboratory Evaluation of Chemical Oxidation Using Hydrogen Peroxide*, ORNL/TM-12259, Oak Ridge National Laboratory, Oak Ridge, Tennessee.

Ravikumar, J. X., and M. D. Goral. 1991. "Effectiveness of Chemical Oxidation to Enhance the Biodegradation of Pentachlorophenol in Soil: A Laboratory Study," pp. 211–21 in *Proceedings of the Twenty-Third Mid-Atlantic Industrial Waste Conference Technomic*, Lancaster, Pennsylvania.

Schreuder and Associates, Inc. 1987. *Results of Soil Analysis Underneath Closure Area 170 and 172 Holdings Ponds*, Vol. 1. Report prepared for Martin Marietta Corporation Michoud Aerospace, Tampa, Florida.

Siegrist, R. L., M. I. Morris, T. L. Donaldson, A. V. Palumbo, S. E. Herbes, R. A. Jenkins, C. M. Morrissey, and M. T. Harris. 1993. *X-231B Technology Demonstration for In Situ Treatment of Contaminated Soil: Technology Evaluation and Screening*, ORNL/TM-12257, Oak Ridge National Laboratory, Oak Ridge, Tennessee.

West, O. R., R. L. Siegrist, H. L. Jennings, A. J. Lucero, S. W. Schmunk, and D. W. Green. 1993. *X-231B Technology Demonstration for In Situ Treatment of Contaminated Soil: Laboratory Evaluation of In Situ Vapor Stripping*, ORNL/TM-12260, Oak Ridge National Laboratory, Oak Ridge, Tennessee.

APPENDIX

ESTIMATE OF COSTS FOR ON-SITE INCINERATION

G D C

MEMORANDUM

TO: ANDREW LUCERO

FROM: BASSAM MEKARI/PAT O'BANNON

DATE: 11/8/94

SUBJECT: BUDGETARY COST ON THERMAL REMEDIATION OF 12,500 CUBIC YDS OF TRICHLOROETHYLENE CONTAMINATED WASTE.

GDC Engineering, Inc. is pleased to submit our budgetary estimate for the above-referenced project. Our estimate includes labor and equipment necessary to mobilize, trial test, excavate and thermally treat the material, and demobilize while meeting all local and federal codes.

Thermal treatment has consistently demonstrated its superiority in comparison with the technologies presently under consideration. Thermal treatment is significantly more thorough in removing contaminants from the treated product and accomplishes this objective in the shortest possible time. GDC's thermal treatment unit is capable of a 10-ton per hour throughput, producing an ash which meets all land disposal regulations.

As shown in the process flow diagram, the unit is composed of a feed system, a rotary kiln (RK), a secondary combustion chamber (SCC) and an air pollution control system (APCS).

The RK is a horizontal refractory lined cylinder which turns around its horizontal axis, exposing the waste material surfaces to heat and oxygen as the feed moves through the chamber. The volatiles are partially burned in the RK and then flow to the SCC for complete destruction.

The exhaust gases from the RK enter the SCC where they are heated to approximately 2000 deg F. Supplemental heat is provided in the SCC by a fossil fuel burner and combustion air control system. Contaminants in the gas stream are destroyed by the oxidizing, high temperature, and turbulent conditions that prevail in the SCC.

The hot gases exit the SCC to the APCS for gas polishing to meet the stringent requirements placed on stack gases for hydrogen chloride and particulate emissions. Those gases first enter a quench duct to lower the temperature to approximately 375 deg. F. Then, they are drafted through a filter fabric collector for fine particulate/dust collection to a packed bed polishing scrubber for gas scrubbing and acid neutralization. Prior to exiting the stack, the wetted gases traverse an entrainment separator to remove any residual water droplets entrained in the vapor stream.

This proposed system has demonstrated compliance with all EPA regulations on a CERCLA project under EPA Region 4 supervision.

The following assumptions were considered during the generation of the budgetary estimate:

1. The material density is 1.1 ton/cubic yard
2. The moisture content is around 25%.
3. The BTU/lb is 0.

Our unit price budgetary estimate is approximately $150 (One Hundred Fifty) dollars per ton.

We appreciate this opportunity and should you have any questions please contact us at (504) 383-8556.

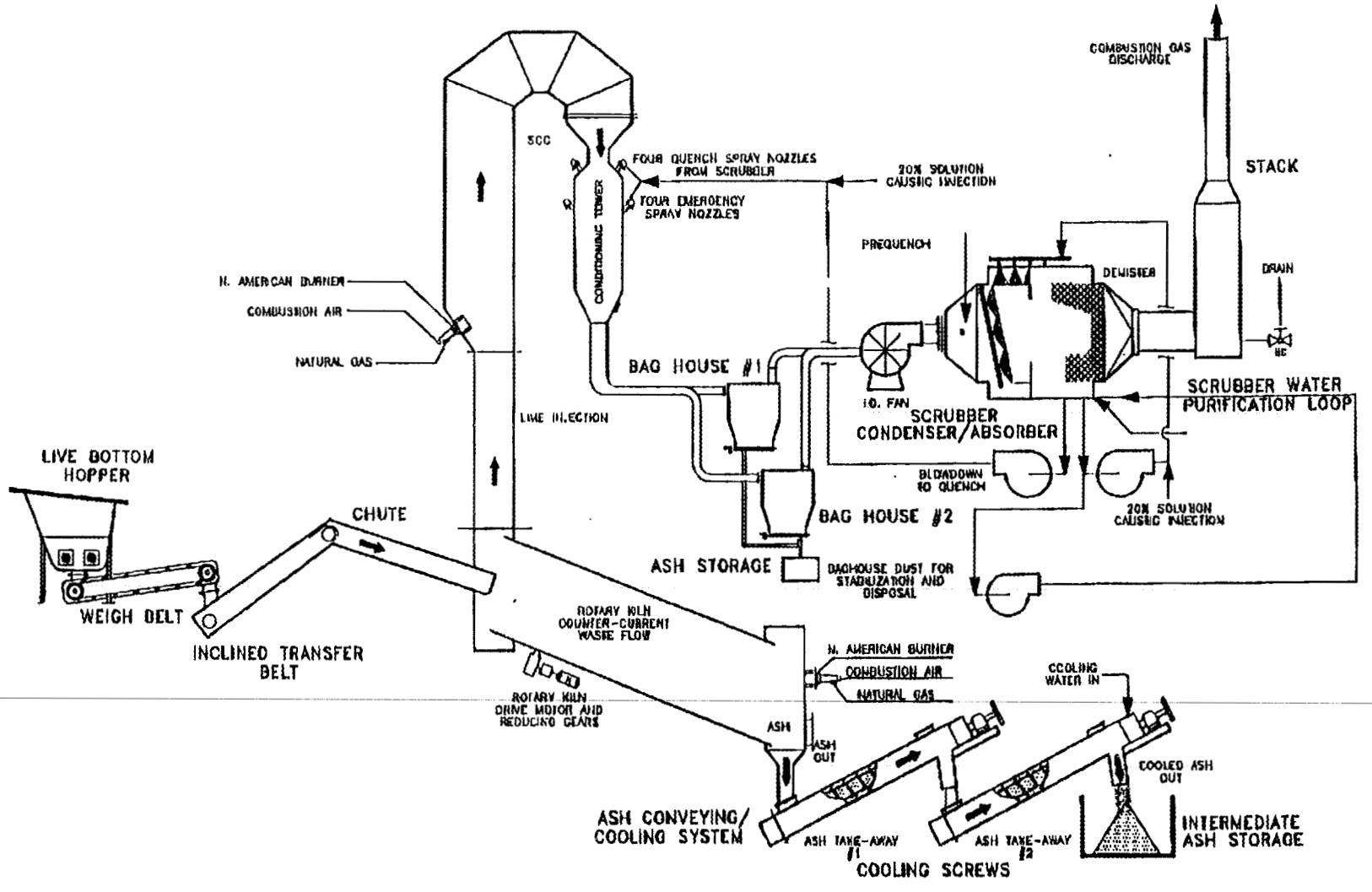

PROCESS FLOW DIAGRAM
TRANSPORTABLE INCINERATION SYSTEM

GDC ENGINEERING INC. SPECIALIZED IN WASTE MANAGEMENT, SITE REMEDIATION, AND THERMAL TREATMENT	DWN. JC 7/23/94	PROJ. NO.
	CHK.	CF NO.
(504) 383-8556 FAX (504) 381-9180 822 NEOSHO AVENUE BATON ROUGE, LA 70802	APPR.	FIGURE NO.

INTERNAL DISTRIBUTION

1. S. R. Cline
2. A. G. Croff
3. T. L. Donaldson
4. V. P. Gilbert
5. J. D. Hewitt
6. H. L. Jennings
7. K. T. Klasson
8. L. J. Koran, Jr.
9. N. E. Korte
10-14. A. J. Lucero
15. A. P. Malinauskas
16. D. S. Marshall
17. L. E. McNeese
18. M. I. Morris
19. S. M. Robinson
20. M. K. Savage
21. R. L. Siegrist
22. O. R. West
23. Central Research Library
24. Y-12 Technical Library
25-26. Laboratory Records
27. Laboratory Records, RC
28. ORNL Patent Section

EXTERNAL DISTRIBUTION

29-48. M. A. Rowland, Martin Marietta Manned Space Systems, 13800 Old Gentilly Road, New Orleans, LA 40189
49. Office of Assistant Manager, Energy Research and Development, DOE-ORO, P.O. Box 2001 Oak Ridge, TN 37831
50-51. Office of Scientific and Technical Information, P.O. Box 62, Oak Ridge, TN 37831