LOCKHEED MARTIN ENERGY RESEARCH LIBRARIES

3 4456 0440568 6

AUG 6 1996

ORNL
Master Copy

LOCKHEED MARTIN

ENVIRONMENTAL
RESTORATION
PROGRAM

ORNL/ER-372

Preliminary Engineering Report Waste Area Grouping 5 Old Hydrofracture Facility Tanks Content Removal Project, Oak Ridge National Laboratory, Oak Ridge, Tennessee

OAK RIDGE NATIONAL LABORATORY
CENTRAL RESEARCH LIBRARY
CIRCULATION SECTION
4500N ROOM 175
LIBRARY LOAN COPY
DO NOT TRANSFER TO ANOTHER PERSON
If you wish someone else to see this report, send in name with report and the library will arrange a loan.
UCN-7969 (3 9-77)

This document has been approved by the ORNL Technical Information Office for release to the public. Date: 6/12/96

ENERGY SYSTEMS
ER

MANAGED BY
LOCKHEED MARTIN ENERGY SYSTEMS, INC.
FOR THE UNITED STATES
DEPARTMENT OF ENERGY

UCN-17560 (6 8-95)

CDM Federal Programs Corporation

contributed to the preparation of this document and should not be considered an eligible contractor for its review.

This report has been reproduced directly from the best available copy.

Available to DOE and DOE contractors from the Office of Scientific and Technical Information, P.O. Box 62, Oak Ridge, TN 37831; prices available from 423-576-8401 (fax 423-576-2865).

Available to the public from the National Technical Information Service, U.S. Department of Commerce, 5285 Port Royal Rd., Springfield, VA 22161.

ORNL/ER-372

902
11

Energy Systems Environmental Restoration Program

Preliminary Engineering Report
Waste Area Grouping 5
Old Hydrofracture Facility
Tanks Content Removal Project,
Oak Ridge National Laboratory
Oak Ridge, Tennessee

Date Issued—June 1996

Compiled by
CDM Federal Programs Corporation
Oak Ridge, Tennessee
under subcontract 96B-99052C

Prepared for
U.S. Department of Energy
Office of Environmental Management
under budget and reporting code EW 20

Environmental Management Activities at the
OAK RIDGE NATIONAL LABORATORY
Oak Ridge, Tennessee 37831-6285
managed by
LOCKHEED MARTIN ENERGY SYSTEMS, INC.
for the
U.S. DEPARTMENT OF ENERGY
under contract DE-AC05-84OR21400

LOCKHEED MARTIN ENERGY RESEARCH LIBRARIES
3 4456 0440568 6

PREFACE

This preliminary engineering report for the Waste Area Grouping 5 Old Hydrofracture Facility (OHF) at the Oak Ridge National Laboratory was prepared as a part of the OHF Tanks Content Removal Project being conducted under the Comprehensive Environmental Response, Compensation, and Liability Act. This work was performed under Work Breakdown Structure 6.1.05.20.01.17. This document presents the conceptual engineering plan for the sluicing and pumping actions that will remove the tank contents and transfer the contents to the Melton Valley Storage Tanks for storage before final disposition.

CONTENTS

FIGURES vii
TABLES vii
ABBREVIATIONS ix
EXECUTIVE SUMMARY xi

1. INTRODUCTION 1-1
   1.1 BACKGROUND 1-1
   1.2 PURPOSE, SCOPE, AND MISSION 1-2
   1.3 SYSTEM REQUIREMENTS 1-2

2. SITE DESCRIPTION AND HISTORY 2-1
   2.1 SITE DESCRIPTION 2-1
      2.1.1 Location and Environmental Setting 2-1
      2.1.2 OHF Facility Description 2-1
   2.2 SITE HISTORY 2-6
      2.2.1 Regulatory History 2-6
      2.2.2 Operating History 2-7
      2.2.3 Surveillance and Maintenance Activities 2-7

3. BASIS FOR TECHNICAL APPROACH 3-1
   3.1 ASSESSMENT OF TANKS AND CONTENTS 3-1
   3.2 ANALYSIS OF TANK CONTENTS 3-7
      3.2.1 Liquid Analyses 3-7
      3.2.2 Sludge Analyses 3-7
      3.2.3 Dry Well Data Review 3-9
   3.3 ASSESSMENT OF EXISTING TANK VENTILATION SYSTEM 3-9
      3.3.1 General 3-9
      3.3.2 Original Off-Gas Vent Installation for Tanks T-1, T-2, and T-9 3-9
      3.3.3 Original Off-Gas Vent Installation for Tanks T-3 and T-4 3-10
      3.3.4 Modification to the Tank Off-Gas System 3-10
      3.3.5 Inspection of Aboveground Equipment 3-11
      3.3.6 Applicability for Use on the OHF Tanks Content Removal Project 3-12
      3.3.7 Reference Drawings 3-13
   3.4 SELECTION OF PREFERRED ALTERNATIVE 3-13

4. TECHNICAL APPROACH 4-1
   4.1 TECHNICAL OBJECTIVES AND OPERATIONAL SCENARIO 4-1
      4.1.1 Technical Objectives 4-1
      4.1.2 Operational Scenario 4-1
   4.2 TECHNICAL REQUIREMENTS 4-4
      4.2.1 Process Equipment Requirements 4-4
      4.2.2 Mechanical Equipment Requirements 4-11
      4.2.3 Electrical Requirements 4-17

4.2.4 Instrumentation Requirements 4-19
4.2.5 Civil Site Requirements 4-22
4.2.6 Tank Confinement Exhaust System Requirements 4-25
4.2.7 Structural Requirements 4-31
4.2.8 Design Requirements for Radiation Protection 4-34
4.3 PERMITS AND REGULATORY REQUIREMENTS 4-36
4.3.1 CERCLA 4-36
4.3.2 RCRA 4-36
4.3.3 National Environmental Policy Act (NEPA) 4-37
4.4 SAFETY ANALYSIS REQUIREMENTS 4-37
4.5 WASTE MANAGEMENT 4-38
4.5.1 Decontamination 4-38
4.5.2 Waste Classification and Volume Estimates 4-39
4.5.3 Disposal Options 4-40
4.6 QUALITY ASSURANCE 4-41

5. PROJECT COST AND SCHEDULE 5-1
5.1 PROJECT COST 5-1
5.2 PROJECT SCHEDULE 5-1

6. REFERENCES 6-1

APPENDIX A - System Requirements Document for the WAG 5 OHF Inactive Tanks Project A-1
APPENDIX B - ORNL Radiological Survey Data B-1
APPENDIX C - Summary of 1988 Sampling Campaign Results C-1
APPENDIX D - Summary of 1995 Sampling Campaign Results D-1
APPENDIX E - Justification for Utilizing T-9 as the Recycle Tank E-1
APPENDIX F - Material Balance Calculations & Estimated Sluicing Requirements F-1
APPENDIX G - Equipment and Piping Sketches G-1
APPENDIX H - Structural Analysis H-1
APPENDIX I - Radiation Field Calculations with Proposed Equipment Layout I-1

FIGURES

2.1 Old Hydrofracture Facility location map 2-2
2.2 Old Hydrofracture Facility site layout map 2-3
2.3 Photograph of OHF Facility 2-4
2.4 Photograph showing the MFST Facility in relation to the OHF Facility 2-5
3.1 Liquid and sludge levels in tank T-1 3-2
3.2 Liquid and sludge levels in tank T-2 3-3
3.3 Liquid and sludge levels in tank T-3 3-4
3.4 Liquid and sludge levels in tank T-4 3-5
3.5 Liquid and sludge levels in tank T-9 3-6
3.6 Photograph of sampling activities conducted at the OHF Facility 3-8
4.1 Schematic diagram of sluicing operation 4-2
4.2 Photographs of a typical sluicing system 4-3
4.3 Process flow diagram 4-5
4.4 Piping and instrumentation diagram, sluicer skid 4-6
4.5 Piping and instrumentation diagram, ventilation skid 4-7
4.6 Piping and instrumentation diagram, pump skid 4-8
4.7 Piping and instrumentation diagram, utility systems 4-9
4.8 Proposed riser installation sketch 4-15
4.9 Valve box sketch 4-16
4.10 Electrical one line diagram 4-18
4.11 Instrumentation concept diagram 4-21
4.12 Site access 4-23
4.13 Existing structures and proposed work area 4-24
4.14 Air flow diagram (no air sweep) for the OHF tanks 4-26
4.15 Air flow diagram (with air sweep) for the OHF tanks 4-30

TABLES

3.1 Liquid, sludge, and curie quantities contained in the OHF tanks 3-1
4.1 Applicable radiation protection standards and procedures 4-35
4.2 Solid waste categories and volume estimates 4-40

ABBREVIATIONS

ALARA	as low as reasonably achievable
ANSI	American National Standards Institute
ARAR	applicable or relevant and appropriate requirement
ASME	American Society of Mechanical Engineers
ASTM	American Society for Testing and Materials
BIO	Basis for Interim Operation
CERCLA	Comprehensive Environmental Response, Compensation, and Liability Act
D&D	decontamination and decommissioning
DBE	design-basis event
DOE	U.S. Department of Energy
DOP	dioctyl phthalate
DOT	U.S. Department of Transportation
EE/CA	Engineering Evaluation/Cost Analysis
Energy Systems	Lockheed Martin Energy Systems, Inc., or Martin Marietta Energy Systems, Inc.
EPA	U.S. Environmental Protection Agency
FFA	Federal Facilities Agreement
GAAT	Gunite and Associated Tanks
GFE	government-furnished equipment
HEPA	high-efficiency particulate air
HP	health physics
HVAC	heating, ventilation, and air conditioning
LGWOD	Liquid and Gaseous Waste Operations Division
LLLW	liquid low-level waste
MVST	Melton Valley Storage Tank
NEPA	National Environmental Policy Act
OHF	Old Hydrofracture
ORNL	Oak Ridge National Laboratory
PLC	programmable logic controller
PPE	personal protective equipment
PVC	polyvinyl chloride
QA&I	Quality Assurance and Inspection
RCRA	Resource Conservation and Recovery Act
TDEC	Tennessee Department of Environment and Conservation
TRU	transuranic
TSR	technical safety requirement
TWRF	Transported Waste Receiving Facility
WAG	Waste Area Grouping

EXECUTIVE SUMMARY

Five inactive liquid low-level waste tanks located at the Old Hydrofracture (OHF) Facility in the Melton Valley area of Oak Ridge National Laboratory have been evaluated and are now entering the remediation phase. Before the final remediation is implemented, the OHF Tanks Content Removal Project will be conducted to remove the current liquid and sludge contents of each of the five tanks. It was concluded in the *Engineering Evaluation/Cost Analysis for the Old Hydrofracture Facility Tanks* (DOE 1996) that sluicing and pumping the contaminated liquid and sludge from the five OHF tanks was the preferred removal action.

This removal action consists of removing transuranic mixed waste from the OHF Facility underground storage tanks and transporting the waste via pipeline to the Melton Valley Storage Tank Facility. The removal action will be accomplished using existing sluicing technologies coupled with providing a tie-in to the existing pipeline where needed to perform the material transfer.

The purpose of this document is to establish a technical approach that will achieve the mission objectives, provide a baseline for defining the design scope and product, provide an adequate technical basis for a conceptual level cost estimate, and identify any "fatal flaws" to the approach.

1. INTRODUCTION

The Superfund Amendments and Reauthorization Act of the Comprehensive Environmental Response, Compensation, and Liability Act (CERCLA) requires a Federal Facilities Agreement (FFA) for federal facilities placed on the National Priorities List. The Oak Ridge Reservation was placed on that list on December 21, 1989, and the agreement was signed in November 1991 by the U.S. Department of Energy (DOE) Oak Ridge Operations Office, the U.S. Environmental Protection Agency (EPA) Region IV, and the Tennessee Department of Environment and Conservation (TDEC). The effective date of the FFA is January 1, 1992. One objective of the FFA is to ensure that liquid low-level waste (LLLW) tanks that are removed from service are evaluated and remediated through the CERCLA process. Five inactive LLLW tanks, designated T-1, T-2, T-3, T-4, and T-9, located at the Old Hydrofracture (OHF) Facility in the Melton Valley area of Oak Ridge National Laboratory (ORNL) have been evaluated and are now entering the remediation phase. As a precursor to final remediation, this project will remove the current liquid and sludge contents of each of the five tanks (System Requirements Document, Appendix A).

It was concluded in the *Engineering Evaluation/Cost Analysis* [EE/CA] *for the Old Hydrofracture Facility Tanks* (DOE 1996) that sluicing and pumping the contaminated liquid and sludge from the five OHF tanks was the preferred removal action. Evaluation indicated that this alternative meets the removal action objective and can be effective, implementable, and cost-effective. Sluicing and removing the tank contents was selected because this action uses (1) applicable experience, (2) the latest information about technologies and techniques for removing the wastes from the tanks, and (3) activities that are currently acceptable for storage of transuranic (TRU) mixed waste.

1.1 BACKGROUND

Five carbon steel underground tanks at the OHF Facility, located within Waste Area Grouping (WAG) 5 at the ORNL, contain approximately 36,000 gal of liquid radioactive and mixed waste and approximately 6,000 gal of sludge categorized as TRU and mixed waste. There is concern about the condition of these tanks because they have stored waste for more than 30 years. The tanks are located near White Oak Creek and Melton Branch, and an uncontrolled release of the tank contents could be hazardous to human health and the environment in the area (DOE 1996).

The OHF Facility tanks, approximately 60 ft west of Building 7852, are the responsibility of the Lockheed Martin Energy Systems, Inc., Environmental Restoration Program, which provides the facility management service and oversees daily activities. The current activities at the OHF Facility tanks involve periodic surveillance and maintenance. These activities include site inspection, tank monitoring, dry well monitoring, off-gas system monitoring and maintenance, radiological surveys, security patrols, and grounds maintenance (Surveillance and Maintenance Plan, ORNL/ER-275, Energy Systems 1994).

1.2 PURPOSE, SCOPE, AND MISSION

The purpose of this document is to establish a technical approach that will achieve the mission objectives, provide a baseline for defining the design scope and product, provide an adequate technical basis for a conceptual level cost estimate, and identify any "fatal flaws" to the approach.

This removal action consists of removing TRU mixed waste from the OHF Facility underground storage tanks and transporting the waste via the existing pipeline to the Melton Valley Storage Tank (MVST) Facility, located about 1500 ft from the OHF Facility. The waste will be removed by a sluicing operation that consists of resuspending the sludge (settled at the bottom of each tank) by spraying recirculated supernatant through a nozzle set at an angle at the top of the tank and recirculating the slurry through piping into a mixing tank. Several passes will be initiated where supernatant is sprayed into the sluice tank and the liquid contents pumped to the mixing tank. After each pass is complete, the sludge (mixed with supernatant) will have been removed from the sluicing tank (to the extent practicable) and transferred to the mixing tank; additional supernatant may then be transferred to the mixing tank for another sluicing pass, or its contents pumped to the MVST.

The mission of the WAG 5 OHF Inactive Tanks project is to safely transfer the contents of the five OHF inactive LLLW tanks to the ORNL active LLLW system. This will be accomplished using existing sluicing technologies coupled with providing a tie-in to the existing pipeline where needed to perform the material transfer.

1.3 SYSTEM REQUIREMENTS

Top-level system requirements for the OHF Tanks Content Removal Project were identified as a part of the preliminary engineering effort and are documented in X-OE-777, "System Requirements Document for the WAG 5 OHF Inactive Tanks Project." This document is included as Appendix A (Draft).

2. SITE DESCRIPTION AND HISTORY

2.1 SITE DESCRIPTION

2.1.1 Location and Environmental Setting

The OHF Facility is located in Melton Valley, approximately 1.1 mi south of the ORNL main plant within the secured area of WAG 5. Figure 2.1 shows the location of WAG 5 and the OHF Facility in relation to ORNL facilities. The five OHF underground waste storage tanks are buried less than 110 yd west of Building 7852 and approximately 131 yd east of White Oak Creek. Figures 2.2 and 2.3 show the site layout and all pertinent structures. A photograph of the MVST Facility with the OHF Facility in the background is provided as Fig. 2.4 to show the close proximity of these facilities. Information on the environmental setting of the OHF Facility is available from many sources and is summarized in the *Site Characterization Summary Report for the Old Hydrofracture Facility* (Energy Systems 1996). The WAG 5 Remedial Investigation Report (DOE 1995) provides a detailed description of the environmental setting of the OHF Facility.

2.1.2 OHF Facility Description

There are five underground storage tanks located at the OHF Facility (T-1, T-2, T-3, T-4, and T-9) ranging in size from 13,000 to 25,000 gal capacity. These tanks will be sluiced out and the contents pumped to an existing LLLW valve box located northwest of Building 7852, and ultimately to the MVST Facility.

The five tanks are buried beneath relatively shallow earth backfill near Building 7852. The tanks were installed in two phases, with tanks T-1, T-2, and T-9 being installed initially and tanks T-3 and T-4 installed in a subsequent operation. Figure 2.2 illustrates the general location of the tanks at the OHF Facility. Construction drawing C-10002-EA-002-D is available that illustrates the original topograpical features of the site before the installation of the OHF Facility.

Tanks T-1, T-2, and T-9 were surplus carbon steel tanks from the Oak Ridge Y-12 Plant and were installed circa 1963 at the OHF site to store LLLW. These tanks were refitted by ORNL shop workers to include additional internals for mixing and sludge retrieval; reference drawings M-10002-EE-004-D, M-10002-EE-005-D, and M-10002-EE-042-D are available to illustrate the modifications. The tanks were installed at the OHF site in a pit having the dimensions of 13 × 36 × 48 ft (depth, width, and length). The tanks, which are horizontal cylindrical shaped, were installed on saddles placed on concrete foundations in the bottom of the pit. The pit was partially filled, approximately halfway up the tank shell, with 1-in. gravel. A polyethylene cover was placed on top of the gravel, and the pit was filled with at least 4 ft of earth mounded over the tops of the tanks. Walls of concrete blocks separate T-1 from T-2 and T-2 from T-9, dividing the pit into three compartments. Dry well sumps were provided for each compartment.

In 1966 two additional storage tanks were added to the system. They were surplus rubber-lined carbon steel tanks. Tanks T-3 and T-4 were installed in a pit next to the existing three tanks. The design of the pit was similar to the initial pit except that a concrete block wall was not installed to separate the tanks.

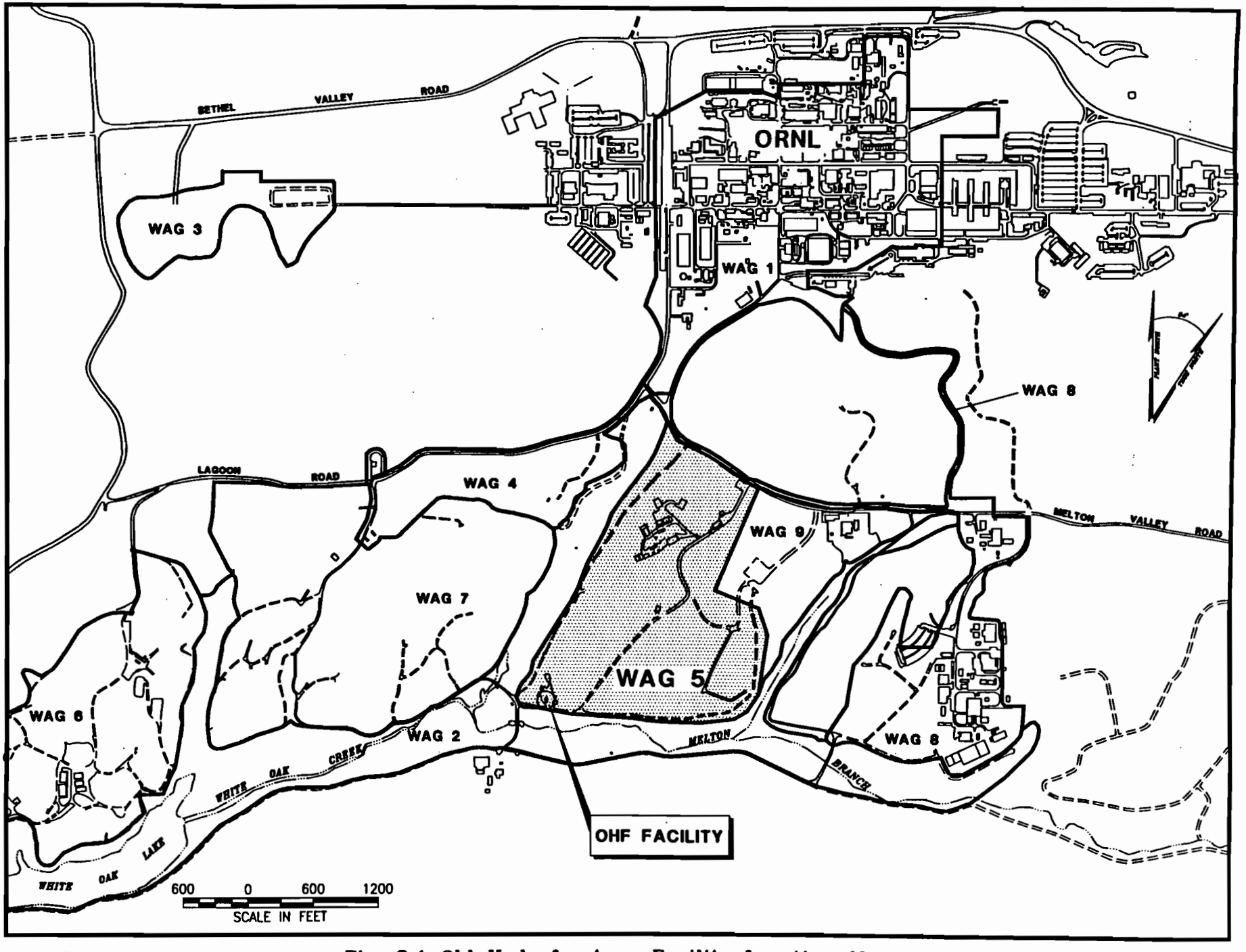

Fig. 2.1 Old Hydrofracture Facility Location Map

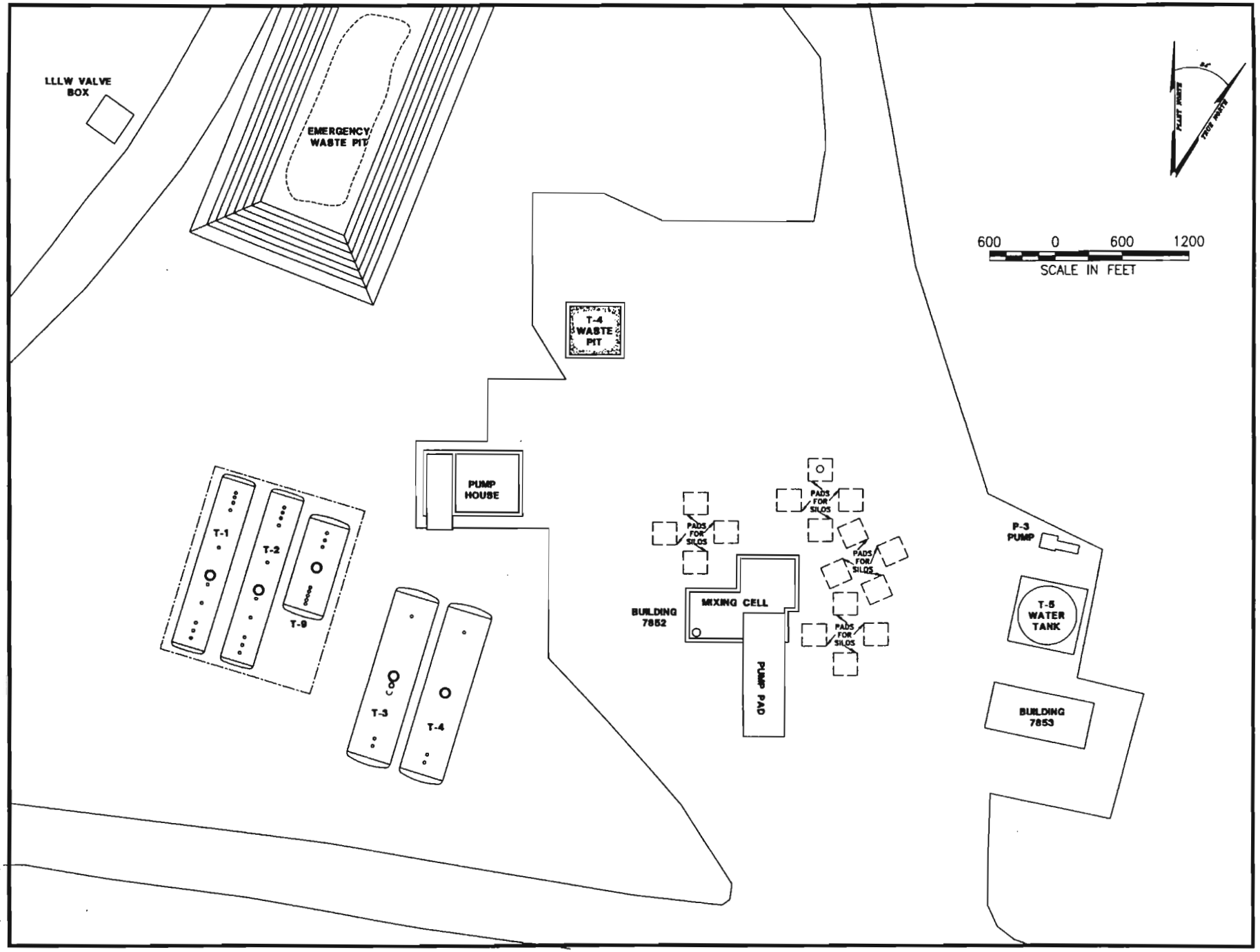

Fig. 2.2 Old Hydrofracture Facility Site Layout Map

a2259/2apr96/4

Fig. 2.3 Photograph of the OHF Facility

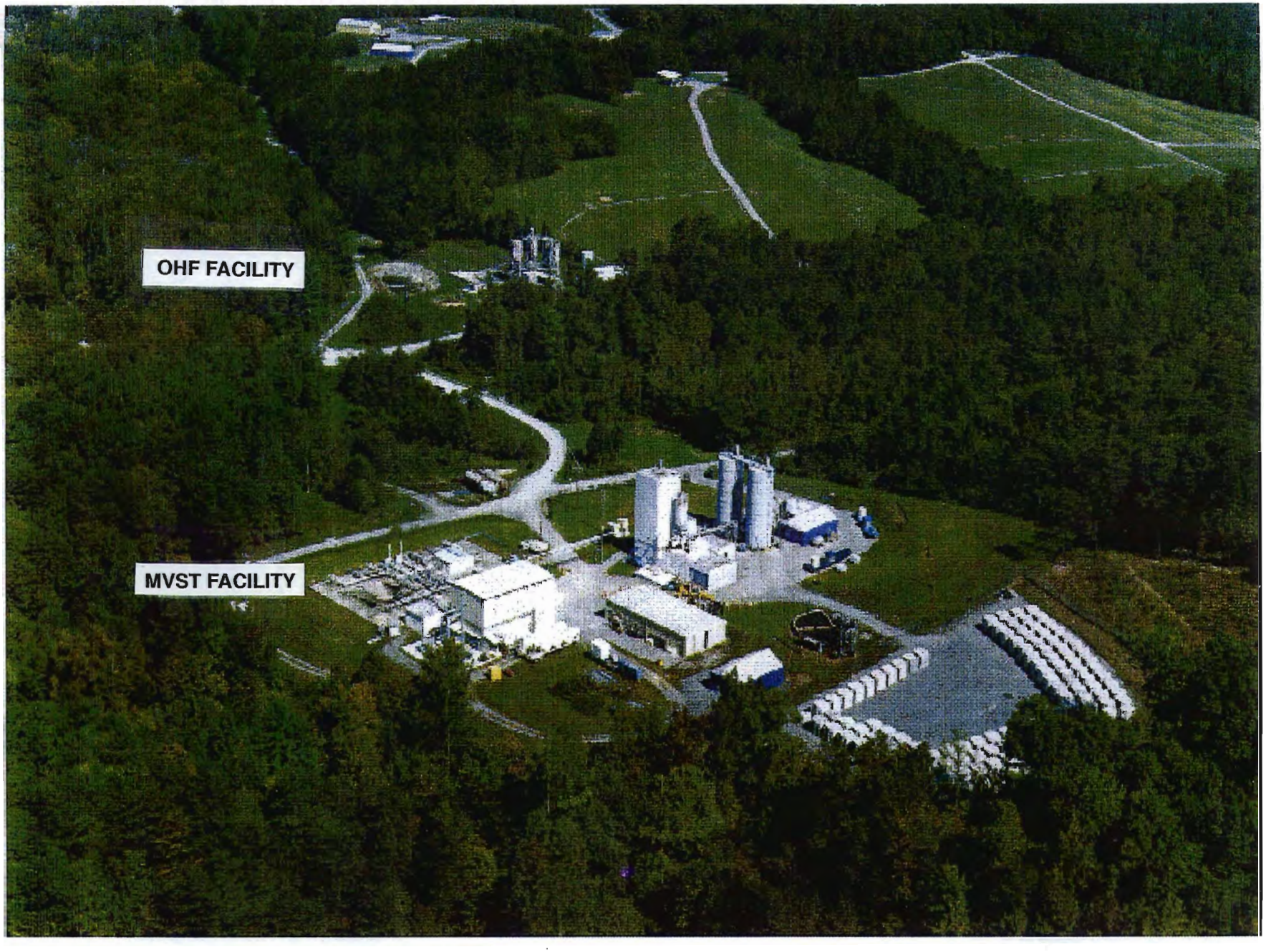

Fig. 2.4 Photograph Showing the MVST Facility in Relation to the OHF Facility

Tanks T-1 and T-2 are 8 ft in diameter and 44.1 ft long with nominal capacities of 15,000 gal. Fittings to each tank include a pneumatic level indicator, which replaced the original float-type indicator. This is installed in an 18-in. manway near the center of the tank. The tanks were also fitted with four airlift pumps, a 2-in. tank inlet nozzle near one end of the tank, and a 4-in. suction line near the same end of the tank. The suction line extends from the top of the tank and into a pipe nipple at the bottom of the tank so that the residual heel will be minimized (ORNL Drawing M-10002-EE-004-D).

Tank T-9 is 10 ft in diameter and 23.8 ft long with a nominal capacity of 13,000 gal. The internal piping is similar to that of T-1 and T-2 except that only two airlift pumps were installed (ORNL Drawing M-1002-EE-005-D).

Tanks T-3 and T-4 are 10.5 ft in diameter and 42.1 ft long. Each of these tanks has 5/8-in.-thick walls with a nominal capacity of 25,000 gal. Each has a rubber lining on the inside. Fittings of each tank include an 18-in. (nominal) manway in the middle of each tank, which contains a pneumatic level indicator, three airlift pumps, a 2-in. inlet near one end of the tank, and a 4-in. suction line near the same end. The suction line extends to near the bottom of the tank (ORNL Drawing M-10002-EE-042-D-1).

The tanks are vented through high-efficiency particulate air (HEPA) filters that discharge through a stack onsite. A blower provides a slight negative pressure to the tanks.

Material currently in the tanks consists of deposits accumulated within the tanks during their operational life serving as surge and feed tanks to the hydrofracture process (DOE 1996).

Other structures at the OHF Facility include buildings, piping, waste pits, and a retention pond. A description of these structures, including the tanks, and their status is provided in the *Site Characterization Summary Report for the Old Hydrofracture Facility* (Energy Systems 1996).

2.2 SITE HISTORY

2.2.1 Regulatory History

The FFA for the Oak Ridge Reservation, signed by EPA, DOE, and TDEC, became effective January 1, 1992. Inactive tank systems are specifically addressed in the FFA (Sect. IX.G and in Appendix F). For inactive tanks at the Oak Ridge Reservation, including the OHF tanks, the FFA requires DOE to address remediation of the tank contents, remediation of the tanks and related piping and appurtenances, and remediation of any surrounding releases or contamination. Sampling and analysis of the OHF tank contents is in progress, as discussed in Sect. 3.2.

This action addresses only removal of the tank contents. Actions to remediate any residual waste left in the tanks following this project, and actions to remediate the tanks, tank-related equipment, and any surrounding release or contamination, also required by the FFA, will be addressed in the final action to be implemented for this site.

2.2.2 Operating History

The OHF Facility was built in 1963 and operated from 1964 until it was shut down in 1980. The purpose of this facility was to dispose of liquid waste by mixing with grout and injecting the waste into a shale formation located approximately 1000 ft below the ground surface. Test injections of the blended waste and grout were made in 1964 and 1965 to demonstrate the feasibility of the process. Following the test injections, the facility became operational for the routine disposal of concentrated intermediate-level waste solutions starting in 1966. A total of about 2.3 M gal of waste grout containing about 650,000 curies of radionuclides was disposed of in 18 operational injections. Improvements and modifications were made to the process and the facility throughout this series of injections, which ended in 1979. Additional information about the test and operational injections is presented in the *Site Characterization Summary Report for the Old Hydrofracture Facility* (Energy Systems 1996).

2.2.3 Surveillance and Maintenance Activities

Since being shut down in 1980, the OHF system has been maintained in a safe storage mode. The Surveillance and Maintenance Plan, ORNL/ER-275 (Energy Systems 1994) provides for routine inspections of the facility, including ventilation system checks, health physics (HP) monitoring, and safety inspections. In addition, surveillance and maintenance activities at the OHF Facility have included sampling and analysis of the tank contents, radiation surveys in the vicinity of the OHF Facility, and various operational and integrity tests on the tank system.

Three radiation surveys have been conducted since the shutdown of the OHF Facility. First, a preliminary radiation survey of the building interiors and the grounds was conducted in September 1984 by Huang et al. Second, a walkover survey of the grounds was conducted in early 1992 using the Ultrasonic Ranging and Data System. Third, a survey of the valve pit associated with the tanks was performed on July 15, 1993. And finally, in 1994, Building 7852, the storage bins, the pump house, the water tank, and Pump P-3 were characterized. ORNL Radiological Survey Data are presented in Appendix B.

The only structure found to be highly contaminated was the valve pit, which is contaminated with a beta-emitter believed to be ^{90}Sr. Lower levels of contamination were found in Building 7852, the pump house, the waste pits, the retention pond, the control room, the engine pad, and the mixing cells. The major contaminant detected was $^{137}Cs/^{137m}Ba$. Lesser amounts of $^{90}Sr/^{90}Y$ and some alpha emitters were found. The specific results of the radiation surveys will be discussed in the project health and safety plan.

As described in Sect. 3.2, two sampling campaigns have been initiated since the OHF operations were terminated, one in 1988 and the other in 1995/1996. A discussion of the results of these sampling campaigns is provided in Sect. 3.2.

3. BASIS FOR TECHNICAL APPROACH

3.1 ASSESSMENT OF TANKS AND CONTENTS

The five OHF tanks contain a total of about 42,000 gal of LLLW consisting of both liquid and sludge (about 36,000 gal of liquid and 6,000 gal of sludge). It is reported that the five tanks contain a total of 30,000 Ci, and 97% of this total is located in the sludge (Energy Systems 1996). Table 3.1 summarizes the volumes of liquid and sludge and the curie content for each tank. Figures 3.1 through 3.5 show approximate sludge and liquid levels in each tank.

Table 3.1. Liquid, sludge, and curie quantities contained in the OHF tanks

Tank	Liquid (gal)	Sludge (gal)	Curies (Ci)
T-1	7,650	800	7,400
T-2	9,500	1,200	3,900
T-3	1,100	2,050	10,300
T-4	13,350	1,350	6,500
T-9	4,650	500	1,400
Total	36,250	5,900	29,500

Videotaping work was performed on January 18 and 22, 1996, by Bert Harper of the Chemical Technology Division. Assessment of tank integrity is limited to careful review and evaluation of the tank internal videotapes. A summary of observations from viewing videotaping activities is presented below.

Two tanks (T-3 and T-4) are rubber lined. These two tanks exhibited similar conditions in the videos. Both tanks had white deposits adhering to the lining above the liquid level. The deposits were not uniformly distributed. Several areas where deposits did not exist gave the appearance of missing liner material. Had the lining become dislodged or removed, the underlying steel shell would have shown discoloration associated with corrosion. Evaluation of the tank condition below the liquid was not feasible due to reflections off the liquid surface. Internal piping appeared intact, although it was coated with deposits above the liquid surface level.

Tanks T-1, T-2, and T-9 are unlined carbon steel. Videos of these tanks revealed white deposits above the liquid level. The end of tank T-9 appeared to have the thickest deposits; however, this observation is more qualitative than quantitative. Areas not covered by deposits exhibited conditions of general corrosion as would be expected in the existing environment. The general corrosion did not appear to have characteristic scaling often encountered in tanks subjected to a moist environment. Areas in the tank showed nonuniform corrosion, which had the appearance of pitting. Given the quality of video pictures, lighting reflection, and deposits on tank internals, determining the nature and depth of potential pitting is difficult. However, corrosion can be accelerated due to the presence of dissolved oxygen in water and the presence of chemicals. The upper regions of the tanks, where most of the apparent pitting occurred, is an area where condensation (oxygen rich) would occur over the operational life of the tank. Thus it is plausible that shallow pitting has occurred. Corrosion also tends to be accelerated by stresses in the metal, for example, at weld joints.

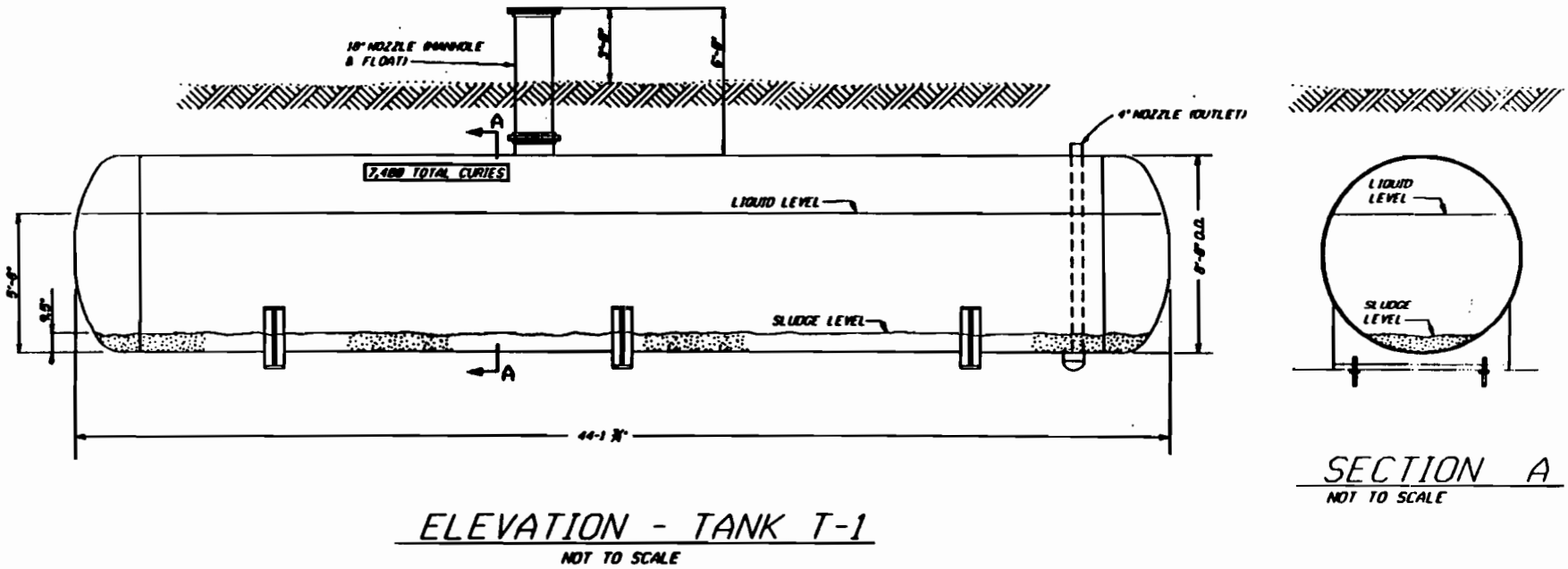

Fig. 3.1 Liquid and Sludge Levels in Tank T-1

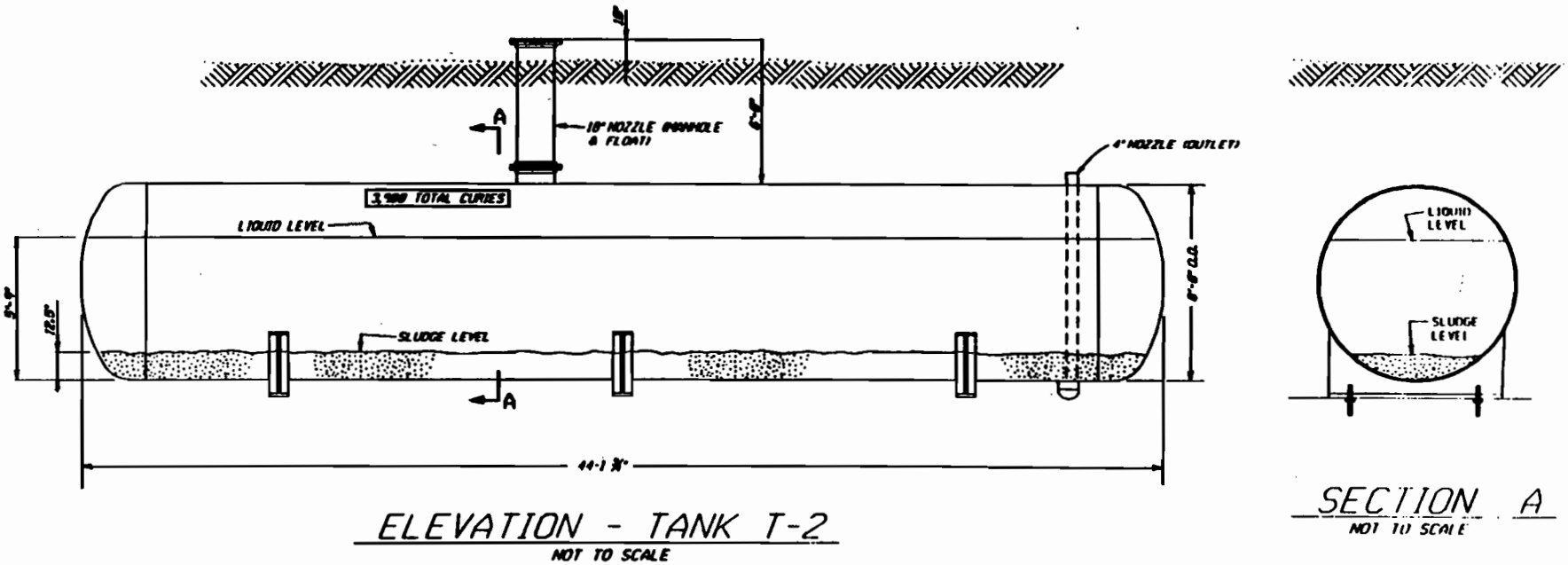

Fig. 3.2 Liquid and Sludge Levels in Tank T-2

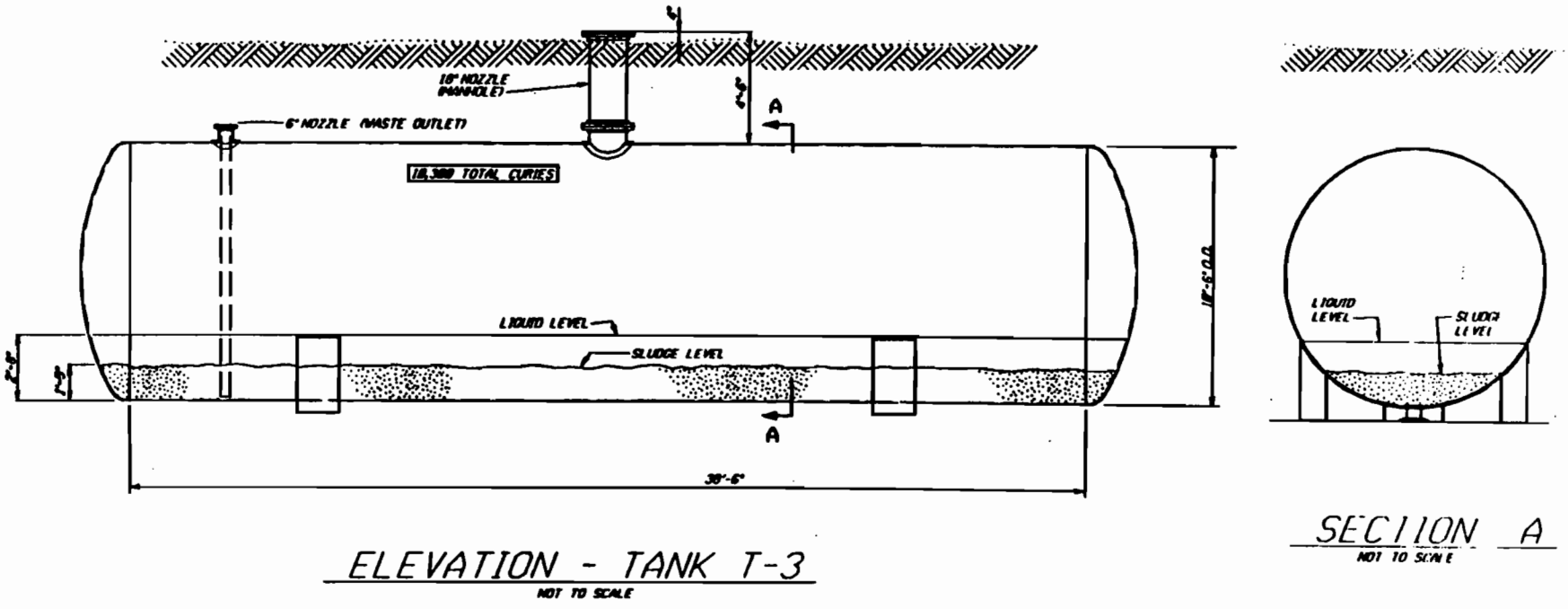

Fig. 3.3 Liquid and Sludge Levels in Tank T-3

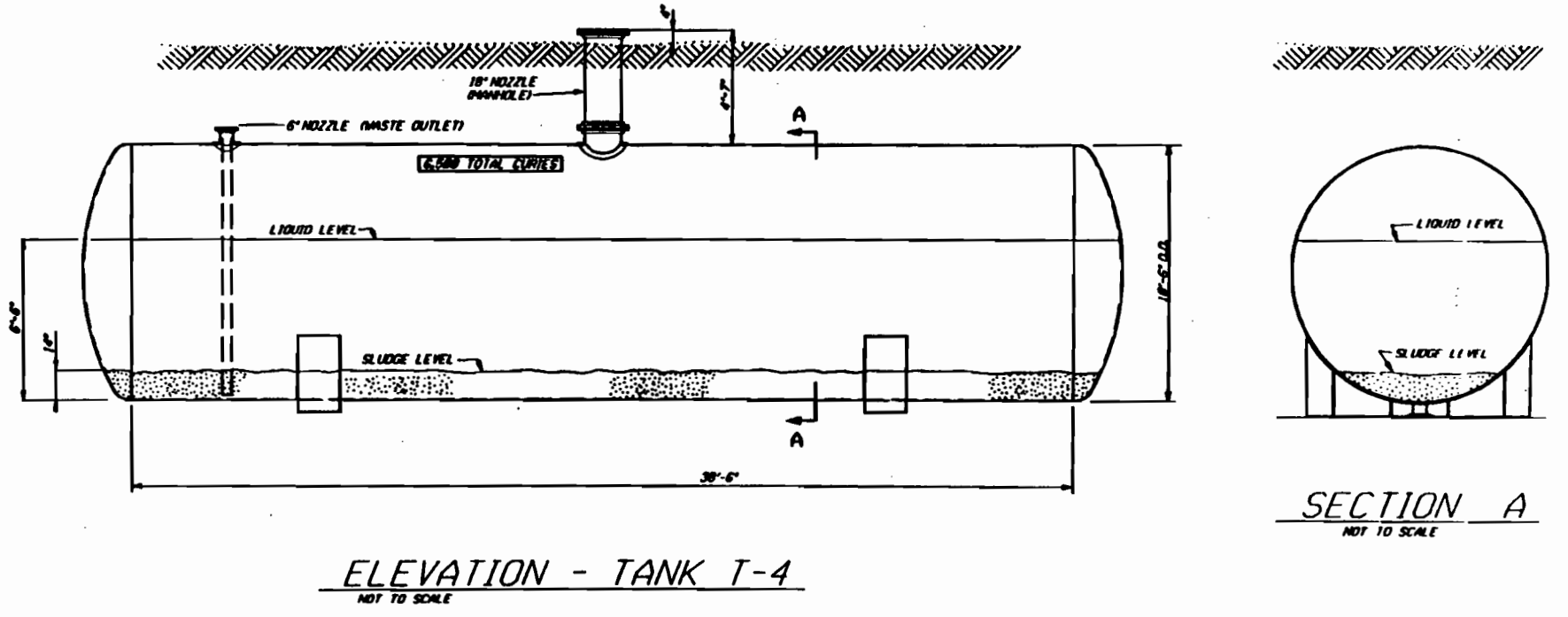

Fig. 3.4 Liquid and Sludge Levels in Tank T-4

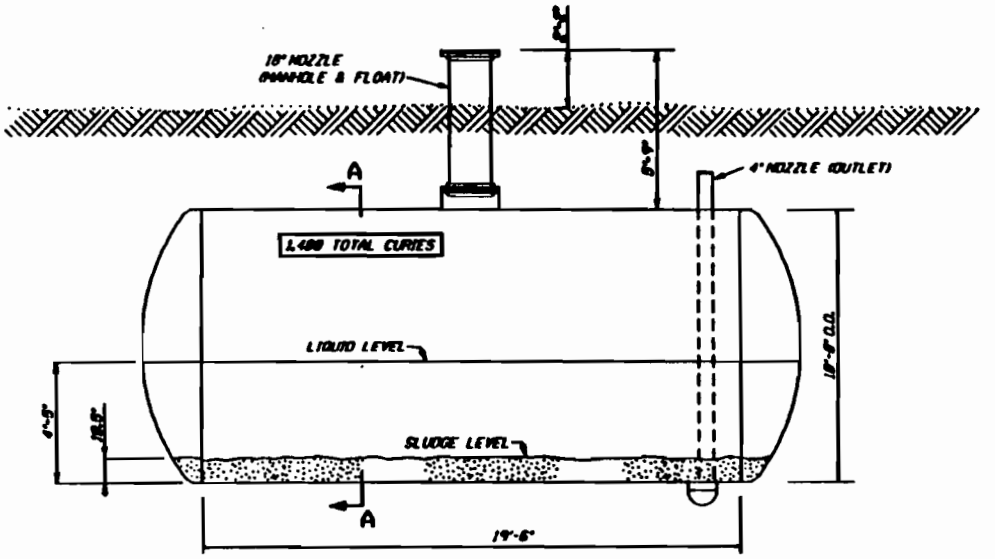

ELEVATION - TANK T-9
NOT TO SCALE

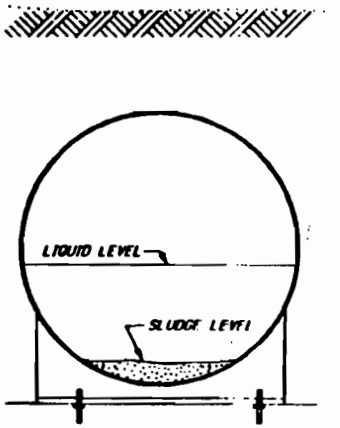

SECTION A
NOT TO SCALE

Fig. 3.5 Liquid and Sludge Levels in Tank T-9

3.2 ANALYSIS OF TANK CONTENTS

3.2.1 Liquid Analyses

1988 Sampling Campaign. Analyses of the 1988 samples indicates that the liquid in tanks T-3, T-4, and T-9 can be characterized as Resource Conservation and Recovery Act (RCRA) hazardous waste based on the RCRA testing protocols at that time. Chromium and mercury in the liquid exceed the RCRA limits. The pH of the supernatant in tank T-3 also exceeded the RCRA criteria (Energy Systems 1996). The results, as provided by the Analytical Chemistry Division, are summarized in Appendix C.

1995 Sampling Campaign. Liquid samples were obtained from each tank by the Liquid and Gaseous Waste Operations Division (LGWOD) before video work and solids sampling operations. A photograph of sampling activities at the OHF Facility is provided as Fig. 3.6. The samples were analyzed by the Analytical Chemistry Division. The preliminary results, as provided by the Analytical Chemistry Division, are summarized in Appendix D.

3.2.2 Sludge Analyses

1988 Sampling Campaign. Analyses of the 1988 samples indicates that the sludge in all the tanks can be classified as TRU waste. The results also indicate that the sludge in all the tanks can be characterized as RCRA hazardous waste. Chromium, lead, and mercury in the sludge exceed the RCRA limits (Energy Systems 1996). The results, as provided by the Analytical Chemistry Division, are summarized in Appendix C.

1995 Sampling Campaign. Sludge samples were obtained from each tank by LGWOD. A summary of observations made during sampling is presented below. Samples are being analyzed by the Analytical Chemistry Division, and results will be summarized in an addendum to Appendix D when complete.

The sludge in tank T-9 appeared neutral greyish in color with a greenish tint in the supernate. The sludge appeared to be soft, thick mud. A sludge column of 10.5 in. was obtained. This measurement correlates fairly well with field log notes generated by LGWOD personnel during 1988 sampling (9 in. was documented). The sludge read 50 R/h (through the plastic bag) after it was removed, but this was mostly from a deposit on the outside of the sample tube. The sample read 6 R/h through the metal can in the sample carrier.

The sludge in tank T-4 appeared brownish-grey in color with a greenish tint in the supernatant. The sludge appeared to be soft, thin mud. A sludge column of 14 in. was obtained. This measurement correlates fairly well with field log notes generated by LGWOD personnel during 1988 sampling (12 in. was documented). The sludge read 30 R/h (through the plastic bag) after it was removed. The sample read 5 R/h through the metal can in the sample carrier. The background reading at the top of the riser was 110 mR/h.

The sludge in tank T-3 appeared brownish in color with a greenish tint in the supernatant. The sludge appeared to be soft, thin mud. A sludge column of 10 in. was obtained. This measurement does not correlate very well with field log notes generated by LGWOD personnel during 1988 sampling (16 in. was documented). The sludge read 15 R/h (through the plastic bag) after it was removed. The sample read 1.5 R/h through the metal can in the sample carrier.

Fig. 3.6 Photograph of Sampling Activities Conducted at the OHF Facility

The sludge in tank T-2 appeared tan to brownish in color with a greenish tint in the supernatant. The sludge appeared to be soft, thin mud. A sludge column of 6 in. was obtained. This measurement does not correlate very well with field log notes generated by LGWOD personnel during 1988 sampling (12 in. was documented). The sludge read 35 R/h (through the plastic bag) after is was removed. The sample read 100 mR/h through the metal can in the sample carrier.

The sludge in tank T-1 from both samples appeared tan to brownish in color with a greenish tint in the supernatant. Both samples looked like soft, thin mud. A sludge column of 8 in. was obtained. This measurement correlates fairly well with field log notes generated by LGWOD personnel during 1988 sampling (9 in. was documented). Radiation readings showed 18 R/h and 20 R/h at contact for the first and second samples, respectively. Through the can, the readings were 0.7 R/h and 2.5 R/h for the first and second samples, respectively.

3.2.3 Dry Well Data Review

As discussed in Sect. 2.1.2, tanks T-1, T-2, and T-9 have individual dry wells. Tanks T-3 and T-4 share a common dry well. Monthly gross beta radiation readings from dry well samples show gross beta concentrations no greater than 2.7 by 10^{-7} Ci/L with most samples less than 2.7 by 10^{-8} Ci/L. These consistently low concentrations are interpreted to indicate that no outleakage from the tanks to the dry wells has occurred.

3.3 ASSESSMENT OF EXISTING TANK VENTILATION SYSTEM

3.3.1 General

The following assessment of the existing OHF tank off-gas system is based on a review of the available reference drawings listed in Sect. 3.3.7, site visits to inspect the above ground equipment, and discussions with Lynn Whitehead, the facility manager, Chris Scott, the former facility manager, Gary Norman of the ORNL Quality Assurance and Inspection (QA&I) Department, and David Cunningham of the ORNL Air Sampling Group.

3.3.2 Original Off-Gas Vent Installation for Tanks T-1, T-2, and T-9

The original off-gas vent for tanks T-1, T-2, and T-9 is identified on drawings P-10002-EE-001-D, P-10002-EE-002-D, M-10002-EE-004-D, M-10002-EE-005-D, and H-10002-EE-007-D-1. These drawings were approved in March 1963. For tanks T-1 and T-2, the off-gas pipe connection on the tanks is identified as nozzle "D." Nozzle "D" is shown as a 3-in. schedule 80 pipe connection on the top of tanks T-1 and T-2 and located south of the 18-in. riser. The off-gas pipe connection for tank T-9 is identified as nozzle "A." Nozzle "A" is shown as a 3-in. schedule 40 pipe connection on the top of T-9 and located on the south end of the tank. The off-gas from the three tanks is shown to be connected to a 3-in. schedule 40 carbon steel underground welded manifold pipe. The off-gas is shown vented to the atmosphere through a HEPA filter located above grade. The invert elevation of the off-gas piping is not specified on the reference drawings. The aboveground HEPA filter is shown located above nozzle "D" on tank T-1. The HEPA filter is identified as a 6 5/8-in.-diameter cylindrical filter rated for 40 cfm at 1-in. wg pressure drop. The HEPA filter is mounted in a filter housing fabricated from 10-in. schedule 40 carbon steel pipe and 150# flanges. The original design of the off-gas vent from tanks T-1, T-2, and T-9 had the effluent vented to the atmosphere downstream of the HEPA filter without the assistance of an induced draft fan (i.e., functioned as a

breather vent). Therefore, tanks T-1, T-2, and T-9 were not intended for negative pressure operation at the OHF Facility. All underground piping is identified as being coated with Bitumastic #50. All aboveground carbon steel was identified to be painted with rust inhibitive primer and weatherproof paint.

3.3.3 Original Off-Gas Vent Installation for Tanks T-3 and T-4

The original off-gas vent for tanks T-3 and T-4 is identified on drawings P-10002-EA-004-D-1, P-10002-EE-012-D-3, M-10002-EE-042-D-1, and H-10002-EE-007-D-1. These drawings were approved in October 1966. For tanks T-3 and T-4, the off-gas pipe connection on the tanks is shown as a 3-in. schedule 40 pipe connection located on the south side of the 18-in. risers. The horizontal off-gas connections on the 18-in. risers is shown 1 ft 3 in. below the flange connection of the risers at an invert elevation of 784 ft 4 in. The 18-in. risers on T-3 and T-4 are identified as schedule 40 carbon steel. The off-gas from the two tanks is shown connected to a common 3-in. underground welded manifold pipe and vented to the atmosphere through a HEPA filter located above grade. The material of construction of this underground off-gas line cannot be confirmed from a review of the reference drawings. Drawing M-10002-EE-042-D-1 has a general note stating piping shall be 304L stainless steel; however, drawing H-10002-EE-007-D-1 identifies carbon steel off-gas piping and the general notes on drawing P-10002-EA-004-D-1 also refer to carbon steel piping. The aboveground HEPA filter is shown located 2 ft-6 in. south of the 18-in. riser on tank T-3. The HEPA filter is identified as a 6 5/8-in.-diameter cylindrical filter rated for 40 cfm at 1-in. wg pressure drop. The HEPA filter is mounted in a filter housing fabricated from 10-in. schedule 40 carbon steel pipe and 150# flanges. The original design of the off-gas vent from tanks T-3 and T-4 had the effluent venting to the atmosphere downstream of the HEPA filter without the assistance of an induced draft fan (i.e., functioned as a breather vent). Therefore, tanks T-3 and T-4 were not intended to operate under a negative pressure at the OHF Facility.

3.3.4 Modification to the Tank Off-Gas System

In 1973, modifications were made to the tank ventilation system as shown on drawings H-20974-EG-001-D, H-20974-EG-002-D, and H-20974-EG-003-D. A ventilation system was incorporated at this time to provide a negative pressure on the five underground storage tanks (T-1, T-2, T-3, T-4, and T-9) and the pump house, Building 7852. An exhaust fan, stack, HEPA filter housing with 2-in. prefilter, and support platform were installed on the exterior south wall of the pump house. The capacity of the exhaust fan is identified as 400 cfm at 4-in. wg. The pump house is exhausted via a 12- by 12-in. duct, attached to the filter inlet plenum. The 12- by 12-in. duct penetrates the south wall of the pump house. Make-up air to the pump house is shown to be provided via a louver in the north wall of the pump house. The design exhaust capacity from the pump house is identified as 320 to 400 cfm.

Exhaust for the five underground tanks is shown to be provided via an underground vent line fabricated from 16 gage, type 304L stainless steel. The existing breather vent line serving tanks T-1, T-2, and T-9 is connected to the new underground 3 1/2-in.-OD vent line downstream of the existing 40 cfm HEPA filter above tank T-1. This new underground vent line is shown to run southeast toward tank T-3. At tank T-3 a 4 1/2-in.-OD × 4 1/2-in.-OD × 3 1/2-in.-OD tee is installed in the underground vent line to pick up the exhaust from tanks T-3 and T-4. The existing breather vent line serving tanks T-3 and T-4 is connected to the new 3 1/2-in.-OD branch line downstream of the existing 40 cfm HEPA filter above tank T-3. After making this tie-in connect at tank T-3, the underground 4 1/2-in.-OD vent line turns north toward the pump house. The vent line turns up

directly underneath the inlet plenum on the HEPA filter housing at the pump house. The vent line connects to the bottom side of the HEPA filter housing inlet plenum. The vent line is shown to slope from an invert elevation of 783 ft 6 in. at tank T-1 to an invert elevation of 782 ft 0 in. at tank T-3. At this low point elevation of 782 ft 0 in., a 1-in. NPS schedule 40 type 304L stainless steel "P" trap is shown welded to the bottom of the 4 1/2-in.-OD vent line. The "P" trap is shown to drain to the carbon steel 18-in. riser on tank T-3 via a tie-in to the side of the riser. The underground vent line that runs north toward the pump house is shown to change invert elevations to 783 ft 0 in. once the vent line has passed the north end of tank T-3. The design exhaust capacity from tanks T-1, T-2, and T-9 is shown to range from 0 to 40 cfm. The total design exhaust capacity from all five tanks, T-1, T-2, T-3, T-4, and T-9, is identified to range from 0 to 80 cfm.

3.3.5 Inspection of Aboveground Equipment

On March 7, 1996, a site visit was made to the OHF tanks with the assistance of an ORNL HP technician. This visit was made to evaluate the configuration and condition of the tank ventilation system. From an inspection of the aboveground equipment, the arrangement of the tank ventilation equipment is consistent with that shown on drawings H-20974-EG-001-D, H-20974-EG-002-D, H-20974-EG-003-D, and H- 10002-EE-007-D-1. An inspection of the exhaust fan and the HEPA filter housing on the south wall of the pump house revealed signs of being weathered with age. There were signs of rust on the galvanized steel filter housing, carbon steel inlet and outlet plenums, carbon steel equipment platform, and at locations where the fan and filter housing are anchored to the equipment platform. The pressure gage that measures the pressure drop across the HEPA filter read 0-in. wg. This reading would indicate there was either no airflow through the HEPA filter or the gage was defective. The position of the locking quadrant indicated the butterfly damper in the stack was opened, assuming the damper was still operable. The disconnect on the fan motor starter was observed to be on, and a vibration from the exhaust fan could be felt. However, the operation of the exhaust fan could not be absolutely confirmed since the belt guard and shaft guard prevented inspection of the belt and shaft rotation. Based on these observations at the exhaust fan platform, it was concluded the HEPA filter pressure gage was probably defective. An inspection of the pressure gage at tank T-3 measuring the pressure drop across the 40 cfm tank HEPA filter revealed this gage had deteriorated to the point where the gage could not be read through the clouded plastic front cover. The 40 cfm carbon steel filter housings above tanks T-1 and T-3 were rusted but appeared to be in good structural condition. The aboveground stainless steel vent lines appeared to be in good condition with no signs of corrosion at the welds. The condition of the below grade carbon steel vent lines, the below grade stainless steel vent line, and the below grade stainless steel "P" trap drain could not be determined. Also the condition of the tie-in connections of these lines to the tanks could not be determined.

Lynn Whitehead stated the HEPA filters at the OHF tank site are periodically changed and dioctyl phthalate (DOP) tested by the ORNL QA&I Department. He also believed the ORNL Air Sampling Group had sampled the stack in the past. Lynn stated there have not been any recent excavations at the site that would assist in evaluating the condition of the underground carbon steel pipes. The cathodic protection system for the tanks is believed to have failed since the 1990 survey of the system.

Gary Norman indicated the HEPA filter at the pump house was last changed and DOP tested on June 28, 1995, according to their database records. Gary stated these records only applied to the HEPA filter at the pump house. Gary was not aware there were HEPA filters above tanks T-1 and T-3. When asked how they DOP tested the HEPA filter at the pump house, Gary indicted they

would inject DOP into the pump house via the louvered opening. Upstream and downstream samples would be taken using the sample ports in the inlet and outlet plenums.

David Cunningham, of the ORNL Air Sampling Group, indicated he would try to find sampling data on the pump house stack if they are available.

3.3.6 Applicability for Use on the OHF Tanks Content Removal Project

The use of the current OHF tank ventilation system for the OHF Tanks Content Removal Project might not be the recommended option for the following reasons.

The configuration of the existing tank ventilation system must be evaluated for determination of its actual capabilities and capacities for use for the sludge removal activities. The discussion in the following paragraph presents the theoretical capacities. Once this evaluation is completed the data will allow for an accurate assessment of the capabilities of the existing system in relationship to the needs of the removal operation. Components that are not present on the existing system include a demister and a heater, both of which protect HEPA filters from wet and/or saturated air streams. There is only one DOP-testable HEPA filter in the system; ORNL HP guidance, RPP 349, can be interpreted to require the presence of two filters in series, depending on the type of service. Additionally the existing tank ventilation system does not have instrumentation to provide an alarm in the event of a loss of ventilation. Operational procedures and administrative controls would have to be established to compensate for the absence of the instrumentation. A cost benefit evaluation will have to be performed to determine the cost-effective solution to be implemented in the removal operation.

The existing tank exhaust system will not provide a minimum 100 linear fpm through an open port due to insufficient capacity and static pressure of the exhaust fan. The existing exhaust fan was sized for 400 cfm at 4-in. wg, 3910 rpm, and ¾ hp. An exhaust capacity of 510 cfm has been estimated for this Preliminary Engineering Study to achieve the target 100 linear fpm through an open port on a sluice tank and the mix tank. Based on a review of the 1972 capacity rating tables from which the fan was selected, the maximum capacity of the fan is listed as 430 cfm at 7.5-in. wg and 5000 rpm. However, from a review of the 1986 capacity rating tables for this fan, the fan capacities have been derated. The maximum capacity listed in the 1986 rating table is 457 cfm at 4-in. wg and 4996 rpm. (Note: At the original design condition of 4-in. wg, 3910 rpm, and ¾ hp, the fan capacity is listed at only 217 cfm.) There is also insufficient static pressure available in the existing fan to overcome the static pressure losses in the 3½-in.-OD and 4½-in.-OD exhaust ducts at a flow rate of 510 cfm. There is an excess of 50 ft of 3½-in. exhaust duct and an excess of 50 ft of 4½-in. exhaust, not including the fitting losses and filter pressure drops. The pressure loss per 100 ft of duct for the existing 3½-in. and 4½-in. ducts is well in excess of 10-in. wg at 510 cfm.

The existing tank exhaust system also show signs of deterioration due to its age (i.e., ranges from 23 to 33 years old). Also, the condition of the underground exhaust ducts and "P" trap drain cannot be determined.

Any attempts to modify the existing system in the contamination areas and radiation areas that exist at the site would be costly.

Lacking the test results, at this time, for the existing system the baseline will include new trailer-mounted HEPA systems for the sluicing operation. There is the possibility that following the

evaluation of the test results and with agreement of the ORNL/ER compliance and health physics personnel, the existing system may prove to be adequate. However, at this time such an approach is believed to be a long shot and therefore not in the baseline.

3.3.7 Reference Drawings

H-20974-EG-001 D	Tank and Pump House Ventilation - Plan and Notes
H-20974-EG-002 D	Tank and Pump House Ventilation - Section
H-20974-EG-003 D	Tank and Pump House Ventilation - Fan and Filter Installation
H-10002-EE-007-D-1	Filter Details for Tanks T-1 & T-3
P-10002-EE-102-D-3	Area Piping General Plan
P-10002-EE-001-D	Storage Tank Piping - Plan
P-10002-EE-002-D	Storage Tank Piping - Elevations
P-10002-EA-004-D-1	Storage Tanks T-3 & T-4 - Piping Plan, Sections & Details
P-10002-EE-044-D	Process Flow Diagram
P-10002-EE-041-D-1	Waste Storage Tanks - Flow Sheet
M-10002-EE-004-D	Modifications to Tanks T-1 & T-2
M-10002-EE-005-D	Modifications to Tank T-9
M-10002-EE-042-D-1	Waste Storage Tanks #3 & #4

3.4 SELECTION OF PREFERRED ALTERNATIVE

Selection of hydraulic sluicing as the technical approach to remove the sludges from the OHF tanks was based on achieving the project goal of 95% removal via utilization of commercially available proven technologies.

Activities completed for the Gunite and Associated Tanks (GAAT) project and the OHF Tanks Content Removal Project provide the foundation for this selection. The *Design Analysis and Calculation Report, DAC-M-030, Evaluation of Equipment and Process Operations for Modified Sluicing Method for Oak Ridge National Laboratory Gunite and Associated Tanks Operable Unit Treatability Study Baseline Report* (draft, never published, referred to as the DAC report hereafter), Lockwood Greene Technologies, February 13, 1995; *Technology Study of Gunite Tank Sludge Mobilization at Oak Ridge National Laboratory, Oak Ridge, Tennessee*, ORNL/ER-286, DeVore et al., December 1994; *Investigation of Commercial Applications for Old Hydrofracture Tank Remediation*, letter report, W.R. Reed, October 5, 1995; and *Selection of Sludge Mobilization Technology*, letter report, J. R. Devore, December 15, 1995, present the technical information that was used for this selection.

Numerous nuclear and non-nuclear companies provide the technology or services to clean tanks. To summarize the reports, the most common method to remove sludges in the commercial sector from tanks or basins is via the utilization of hydraulic sluicing from a system inserted into the tank that sprays water through a nozzle or nozzles to fluidize and mobilize the solids. Devore (1995) prepared a matrix evaluating various sluicing technologies, ranging from what is termed past practice sluicing, the technology used for cleaning the OHF tanks in the early 1980s, to the utilization of specialty tank car cleaning equipment. The evaluation resulted in the recommendation to use past practice sluicing as the approach to remove the sludge from the OHF tanks.

4. TECHNICAL APPROACH

4.1 TECHNICAL OBJECTIVES AND OPERATIONAL SCENARIO

4.1.1 Technical Objectives

The technical objectives for the OHF Tanks Content Removal Project are

- to identify an existing sluicing system suitable for sluicing and removing the supernate and sludge from the tanks,
- to remove 95% (or the maximum amount practicable) of the sludge accumulated at the bottom of each tank,
- to transfer supernate and sludge in a batch process that contains 10–20% solids by weight (30–33% solids by volume) to the MVST Facility, and
- to maintain personnel exposures as low as reasonably achievable (ALARA) during each activity of the project and to protect human health and the environment.

4.1.2 Operational Scenario

This section outlines in general terms how the OHF tank sluicing activities will be conducted. Additional details on the sluicing of the tanks is provided in Sect. 4.2.1.3. Figure 4.1 presents a schematic of how the sluicing system will transfer wastes from the tanks to the MVST Facility. Photographs of a typical sluicing system used to sluice tanks with accumulated sludge are shown in Fig. 4.2.

Tank T-9 will be used to recirculate, or recycle, sluice water for each of the other tanks. Sluice water will be sprayed into the sluice tank (T-1, T-2, T-3, and T-4), pumped out to T-9, and then sprayed back into the sluice tank in a continuous cycle until the solids concentration reaches the level established for transfer of the sluice water to the MVST Facility. At that point, one sluicing pass will have been completed. Successive sluicing passes will proceed until maximum sludge removal is achieved. The contents of T-9 will not be removed initially. Recirculation of sluice water from the other tanks will likely resuspend much of the sludge in T-9. Tank T-9 will be sluiced, if necessary, in a manner similar to the other tanks.

These sluicing passes are to be continued in a batch process until the goal of 95% sludge removal, or the maximum amount practicable, is obtained. Afterwards, the sluice tank may be rinsed with fresh water and the heel evacuated from the tank. The sluicing equipment will then be moved to the next sluice tank, and the entire procedure repeated.

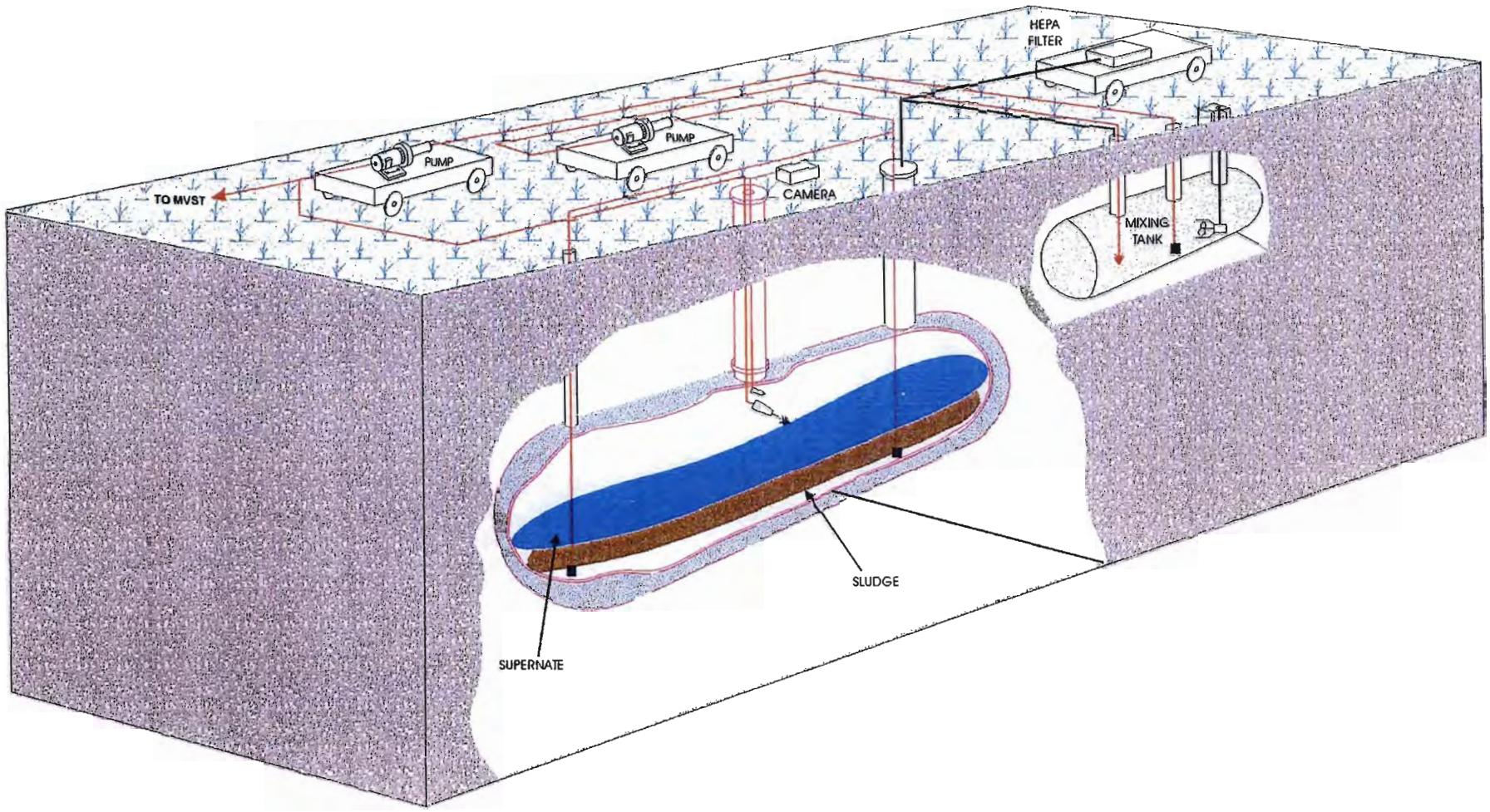

Fig. 4.1 Schematic Diagram of Sluicing Operation

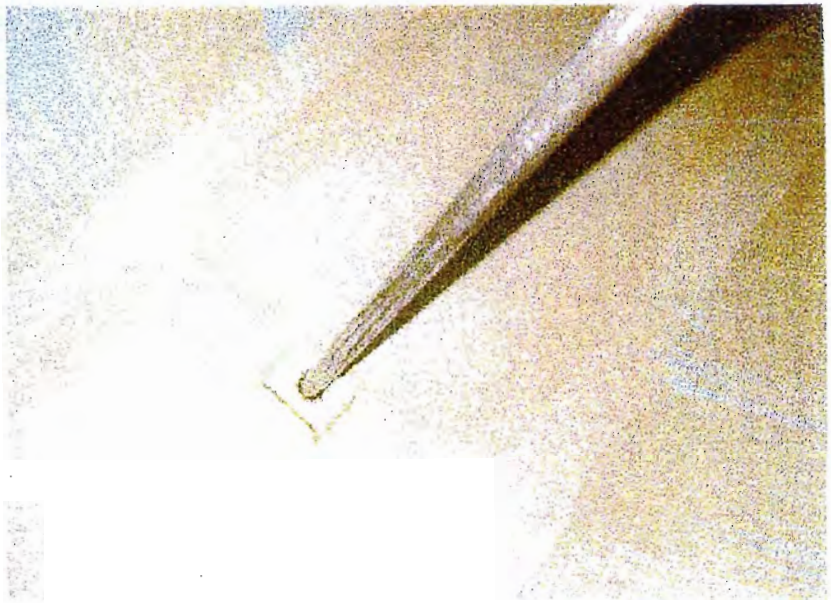

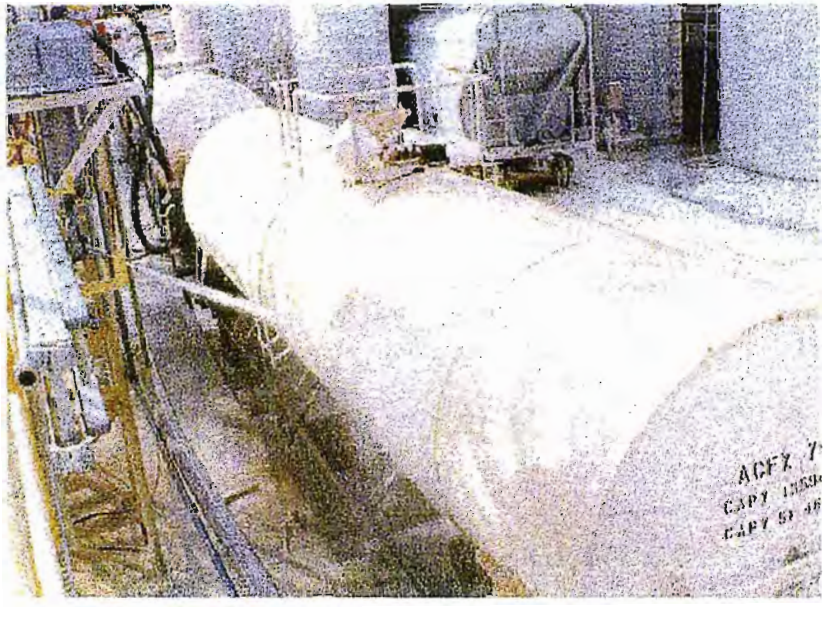

Fig. 4.2 Photograph of a Typical Sluicing System

4.2 TECHNICAL REQUIREMENTS

4.2.1 Process Equipment Requirements

4.2.1.1 General

Selection of the process equipment for the OHF Tanks Content Removal Project is based on the objective to remove 95% of the sludge currently present in tanks T-1, T-2, T-3, T-4, and T-9. The basis of operation will be a sluicing system and its associated pumps and ancillary equipment, instrumentation and controls, and ventilation equipment. The major equipment items included in the Preliminary Engineering Report consist of the following and are shown on the Process Flow Diagram (J3E SK01) and the Piping and Instrument Diagrams (J3E SK02, J3E SK03, J3E SK04, and J3E SK05) that are presented as Figs. 4.3 through 4.7.

4.2.1.2 Equipment descriptions

Sluicer System Equipment. The sluicer system will be government-furnished equipment (GFE). It is a modified Model M-8A Tank Cleaning System as supplied by Bristol Equipment Company, Yorkville, Illinois 60560 (708/553-7161). The sluicer is a remote, controllable cleaning system using a water stream at 200 gpm and 200 psig for sludge removal.

Recycle Tank. The existing tank T-9 will serve as the recycle tank for the sluicing operations. It was initially thought that a new aboveground tank would be used for recycle purposes. However, this option is not feasible without significant amounts of shielding, as shown by estimates of expected radiation fields generated around this tank during operation. In addition, cost for procurement, installation, and final disposition of a new tank is prohibitive as compared to using T-9. A more detailed discussion, along with radiation field calculations, is presented in Appendix E.

Pumps and Ancillary Equipment. Pumps for the sluicing operation will consist of a low pressure pump, a high pressure pump, a process water booster pump, and possibly a hydraulic pump. These pumps and their ancillary equipment are detailed in Sect. 4.2.2, Mechanical Equipment Requirements.

Instrumentation and Controls Equipment. Instrumentation and controls will provide the ability to perform sluicing operations from a control trailer located some distance from the equipment. Instrumentation and controls equipment is detailed in Sect. 4.2.4, Instrumentation Requirements.

Ventilation Equipment. Ventilation equipment will maintain a negative atmosphere within the tanks and a clean air stream to atmosphere during sluicing operations, and an inflow into the tanks when a riser is open. The ventilation equipment is detailed in Sect. 4.2.6, Tank Confinement Exhaust System Requirements.

Grinder. A grinder will be supplied to break up clumps of sludge material. The grinder will be a model HED 150 as supplied by IKA Works, Inc., Wilmington, North Carolina 28405 (800/733-3037), or engineering-approved equal.

Sampler. An automatic, composite-type, isokinetic sampler will be provided to gather process samples during sluicing and transfer operations. The sampler will be a Model EPA-1 Isolok Sampler

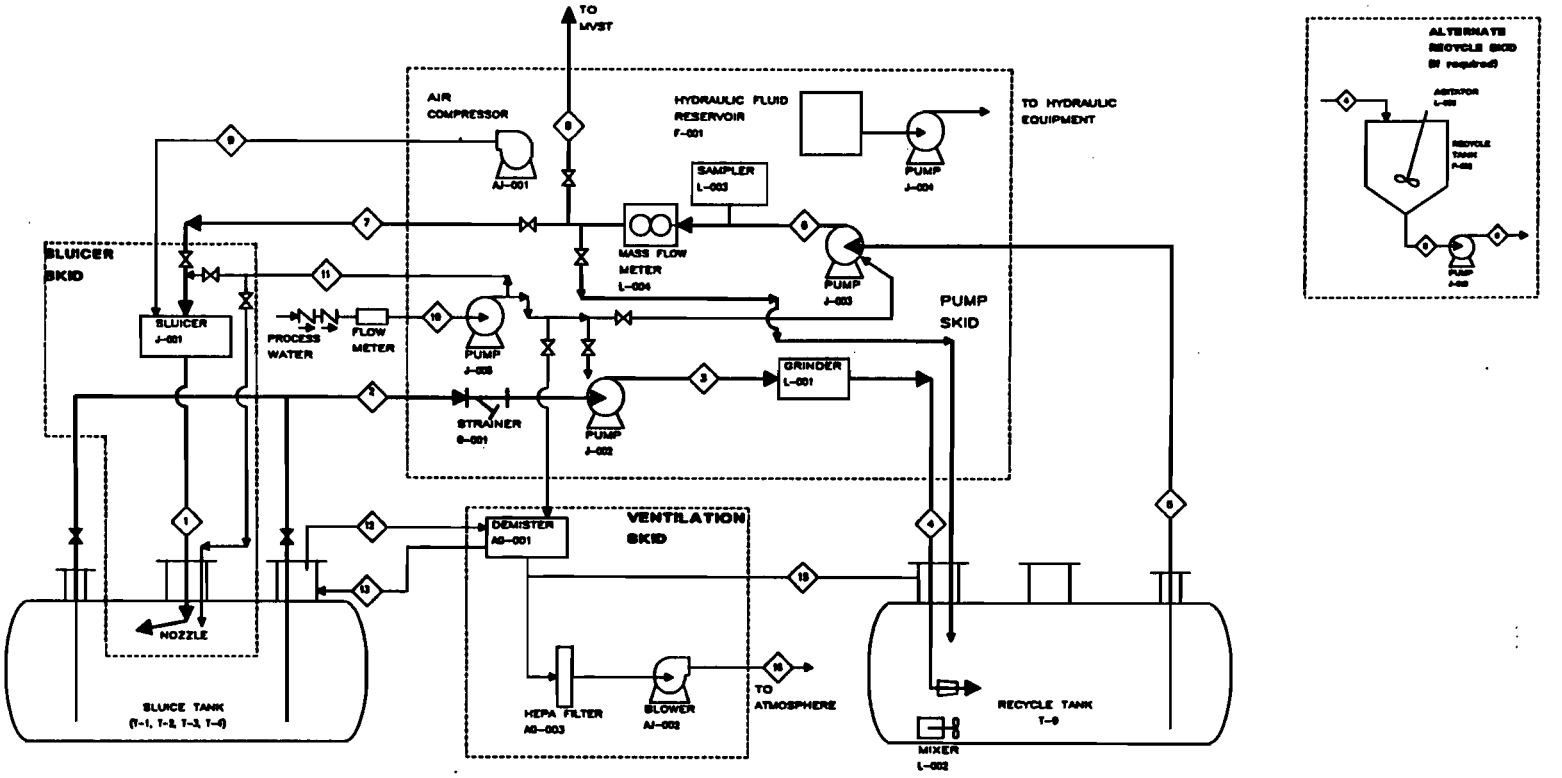

STREAM NO.	1	2	3	4	5	6	7	8	9	10	11	12	13	14	15	16
STREAM DESCRIPTION	SLUICE WATER	SLURCEATE TO LOW PRES. PUMP	SLURCEATE TO GRINDER	RECYCLE TANK FEED	HIGH PRES. PUMP FEED	HIGH PRES. PUMP DISCHARGE	SLUICER FEED	WASTE WATER TO MVST	RECYCLE FOR [redacted]	COMPRESSED AIR FOR SLUICER	PROCESS FEED WATER	RINSE WATER TO SLUICER	OFF-GAS FROM SLUICE TANK	DEMISTER DRAIN	OFF-GAS FROM RECYCLE TANK	EXHAUST
NORMAL FLOW GPM (CFM)	200	200	200	200	200	200	200	20	200	4	40	40	265	0.02	245	510
MIN FLOW GPM (CFM)																
MAX FLOW GPM (CFM)																
NORMAL PRESSURE (PSIG)	200					200	200	20		100	60	60				
MIN PRESSURE (PSIG)	190					190	190			90						
MAX PRESSURE (PSIG)	250		30	25		250	250	30	25	120						
SPECIFIC GRAVITY																
% SOLIDS								20								

NOT TO SCALE

ORF TANKS CONTENT REMOVAL PROJECT

CH DUNCS 2-22-96 REV. 0

PROCESS FLOW DIAGRAM

J3E SK01

Fig. 4.3 Process Flow Diagram

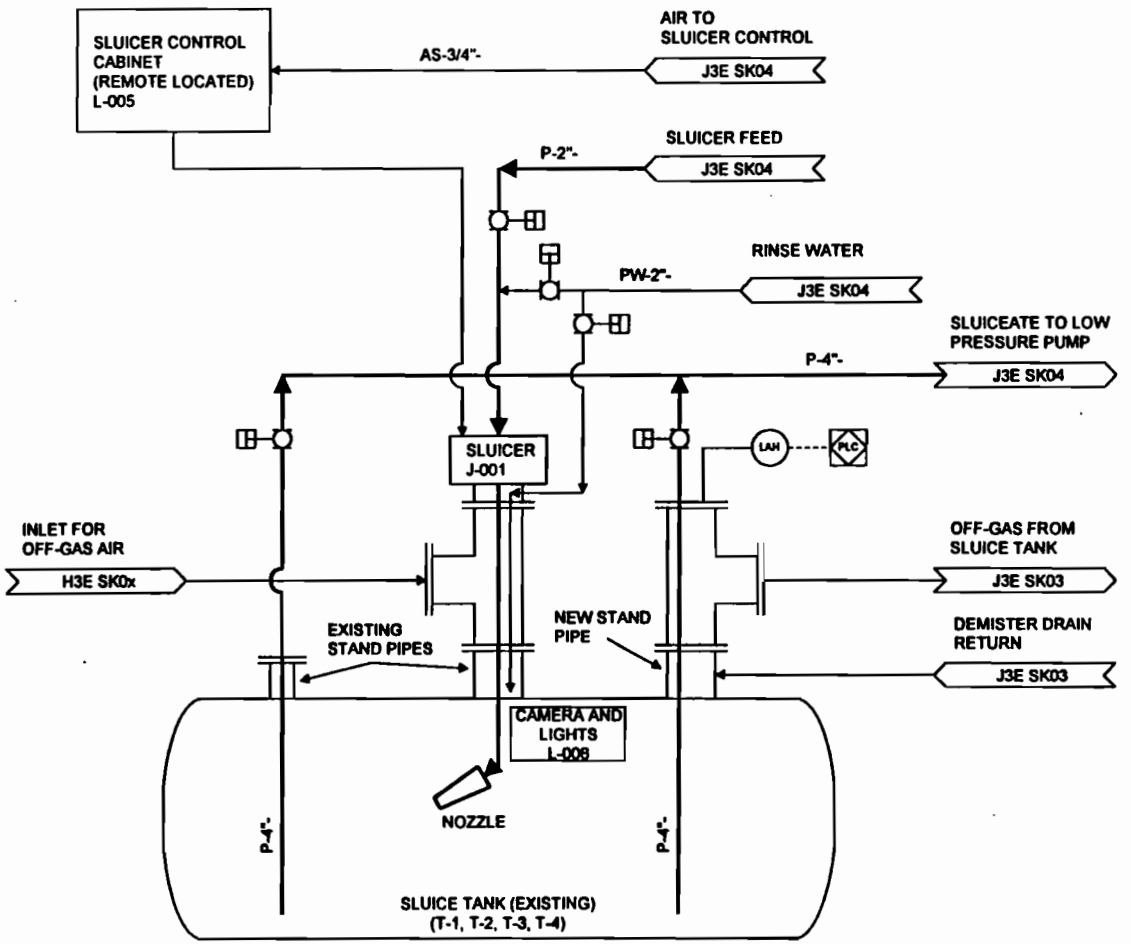

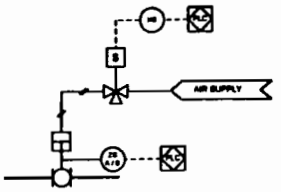

TYPICAL CONTROL VALVE

NOT TO SCALE

OHF TANKS CONTENT REMOVAL PROJECT		
CH DUKES	2-27-96	REV. 0
PIPING & INSTRUMENT DIAGRAM SLUICER SKID		
J3E SK02		

Fig. 4.4 Piping & Instrumentation Diagram, Sluicer Skid

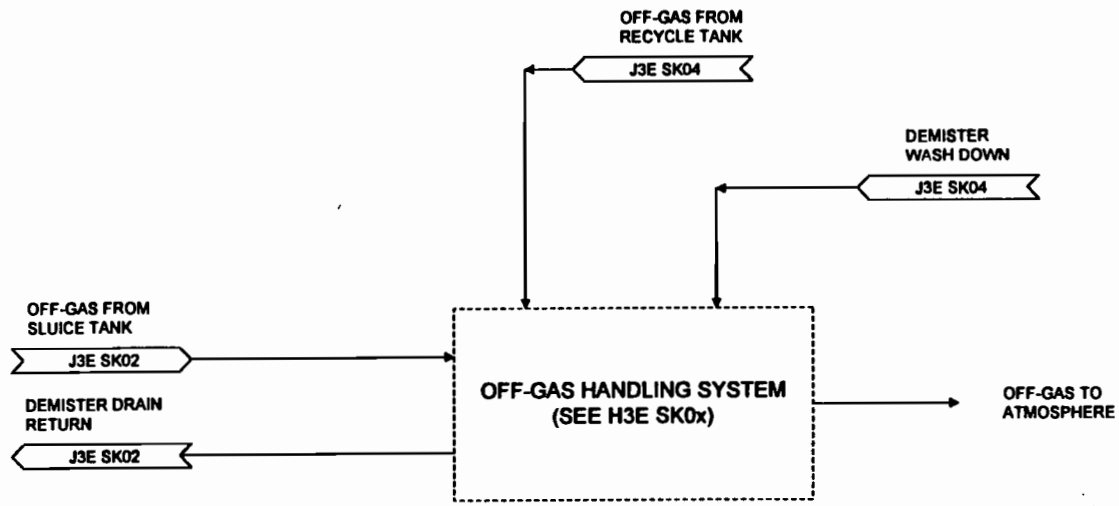

NOT TO SCALE

OHF TANKS CONTENT REMOVAL PROJECT		
CH DUKES	2-22-96	REV. 0
PIPING & INSTRUMENT DIAGRAM VENTILATION SKID		
J3E SK03		

Fig. 4.5 Piping & Instrumentation Diagram, Ventilation Skid

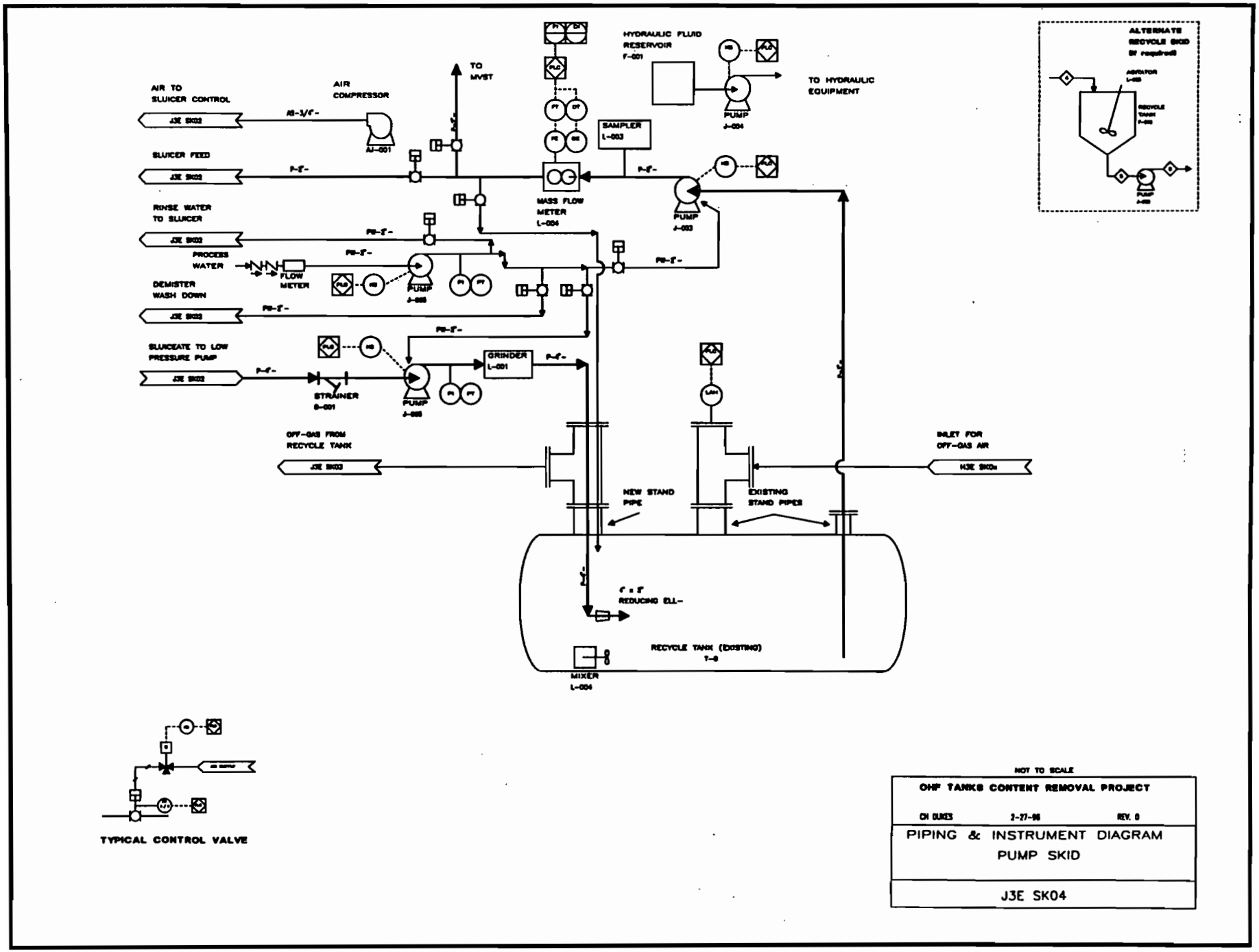

Fig. 4.6 Piping & Instrumentation Diagram, Pump Skid

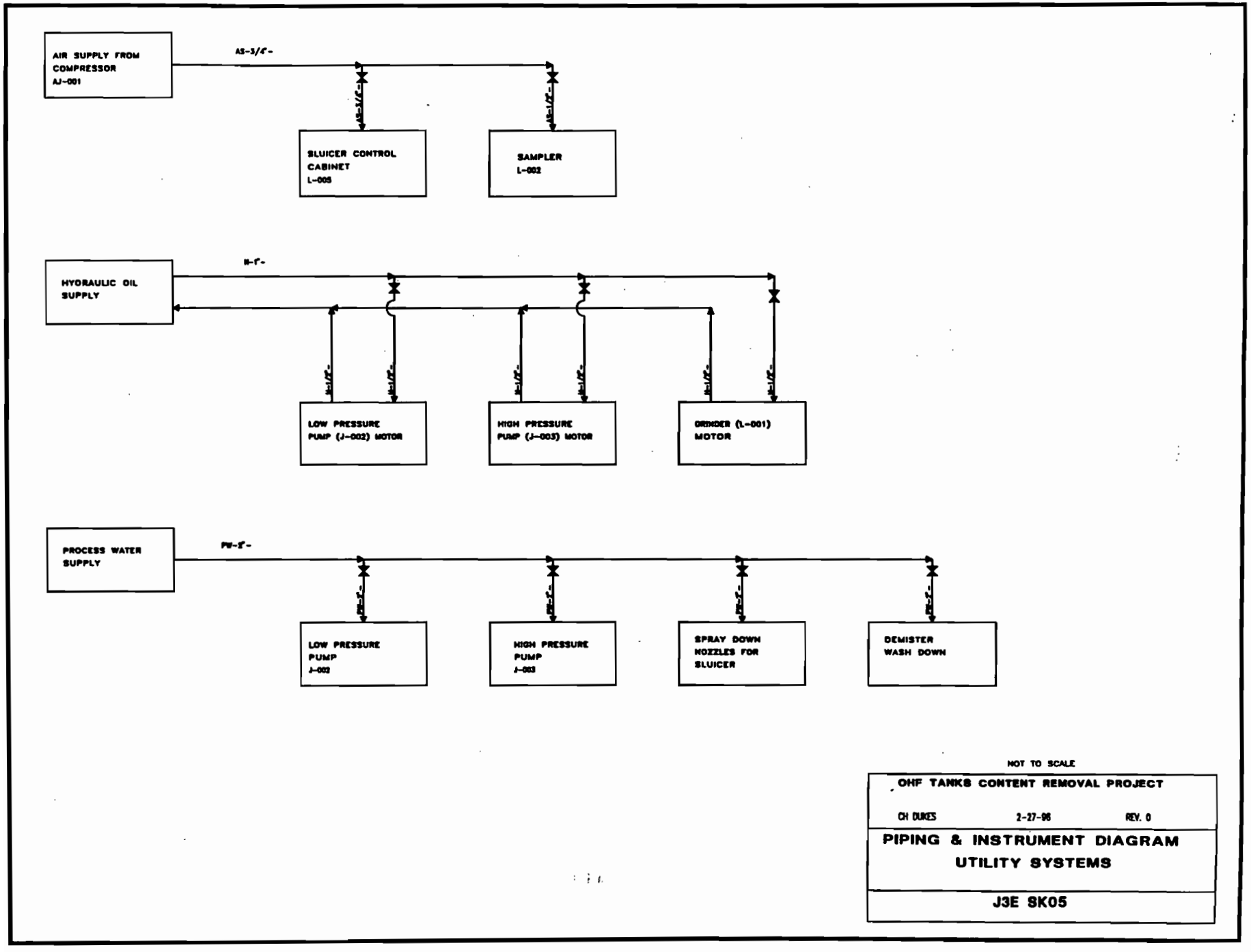

Fig. 4.7 Piping & Instrumentation Diagram, Utility Systems

as supplied by Bristol Equipment Company, Yorkville, Illinois 60560 (708/553-7161), or engineering-approval equal.

4.2.1.3 Process operations

Sluicing Tanks T-1, T-2, T-3, and T-4. Sluicing operations will be performed in batch fashion. Each tank could require three to five passes to remove 95% of the contents. Before performing the initial sluicing pass on each tank, 2000 to 3000 gal of supernate will be transferred to T-9. The remaining supernate will be transferred to one of the other tanks. Once supernatant transfer is complete, the first sluicing pass will be carried out as detailed below.

As shown in the Process Flow Diagram (Fig. 4.3) sluice water will be transferred from T-9 to the sluicer at up to 200 gpm and 200 psig by the high pressure pump. A mass flow meter is provided for continuous monitoring of the solids content in the sluice water. In addition, a sampler is provided so representative process samples can be obtained during operation. As a tank is sluiced, sluice water will be transferred to T-9 by the low pressure pump. Control of the sluicing operation will be achieved with the instrumentation discussed above, a camera system in the sluice tank, and level instrumentation in T-9. An automatic backwash strainer is provided to remove particulate matter larger than 5/16 in. The sluice water in T-9 will be continuously mixed during operations to prevent settling of particulate matter. These operations are performed until the sluice water contains 10–20% solids by weight (30–33% solids by volume). To begin the next sluicing pass, additional supernatant is transferred to T-9. The quantity transferred depends on the amount of sludge remaining in the tank. Successive sluicing passes are continued until at least 95% contents removal is obtained, or transfer to MVST is required. For each tank sluiced, the total quantity of supernatant transferred to T-9 plus the sludge removed will not exceed 8000 gal (nominal). Depending on whichever occurs first, transfers to MVST will take place when the volume of sluice water and sludge in T-9 reaches 8000 gal (and 30–33% solids by volume) or when, to the extent practicable, sludge removal is completed. The material balance estimates provide an approximate total volume of water required to sluice each tank and are included as Appendix F.

Once sludge removal is completed, the sluice tank may be rinsed with fresh water and the heel pumped from the tank. The sluicing equipment would then be moved to the next sluice tank, and the entire procedure repeated.

Sluice Tank T-9. The contents of T-9 will not be removed before initiation of sluicing tanks T-1, T-2, T-3, and T-4. It is believed that the majority of sludge in tank T-9 will be removed while recycling the sluice water from the other tanks. Any remaining sludge will be sluiced with fresh water and removed through procedures similar to those previously outlined.

4.2.1.4 Material balances

The following is an estimate of supernatant and sludge transfers to MVST during OHF sluicing operations.

Approximately 42,000 gal of sludge and supernatant are currently in the tanks. If one assumes no transfers of supernatant to the evaporator, it is estimated that 47,000 to 50,000 total gal of material will be sent to MVST. This estimate is based on the 42,000-gal inventory plus 1,000 to 1,500 gal of clean water per tank for rinse-down (probably high on rinse-down amount but

conservative). Appendix F presents the material balance calculations and estimated sluicing requirements.

The estimated sluicing requirements (Appendix F) show that between 20,000 and 36,000 gal of supernatant will be required to remove all sludge. This estimate is based on a few factors: (1) supernatant required to obtain 10% by weight solids per sluicing pass, (2) percent solids removed per pass ranges from 50 to 90%, and (3) number of passes required to obtain greater than 95% removal is three to five (assume minimum of three passes regardless of percent removed, four or five passes as required) depending on removal efficiency per pass.

As a result, if 90% of the sludge is removed per pass, 20,500 gal of supernatant will be required (for all tanks). This increases to 31,500 gal total to include sludge and rinse water. If 50% of the sludge is removed per pass, 36,000 gal of supernatant will be required (for all tanks). This figure increases to 47,000 gal total to include sludge and rinse water.

In summary, between 20,000 and 36,000 gal of supernatant will be required to sluice the OHF tanks. Since there is currently 36,000 gal of supernatant in the OHF tanks, it is not recommended that any supernatant be transferred to the evaporator before sluicing.

4.2.2 Mechanical Equipment Requirements

4.2.2.1 General

Mechanical equipment is required to entrain the sludges in the supernatant present in the tanks at the OHF Facility and safely transport them to the MVST Facility. Equipment and piping sketches are provided as Appendix G.

4.2.2.2 Method of accomplishment

The Process Flow Diagram (Fig. 4.3) is the basis for the task. The equipment required for this task will be mounted on heavy-duty multiple-axle trailers complete with U.S. Department of Transportation (DOT) compliant accessories, sealed drip pan, and stabilization jacks and supplied with removable hoop stanchions over which a 6-mil poly-film is stretched and secured for spray control. Each trailer will be placed at the optimum point to accomplish the task. Power for all electrically driven equipment will originate from disconnects at the OHF site and be routed to distribution panels on each trailer.

The breakdown of the equipment for each trailer is:

A. Pump Trailer

This trailer will house both the low and high pressure pumping units, grinder, strainer, hydraulic power source and its power head, air compressor, disconnect panel for connection to control trailer and distribution manifolds for hydraulics and air, and electrical distribution equipment (e.g., breakers, wireway, disconnects, etc.).

B. Sluicing Equipment Trailer

The Bristol sluicing unit and its shipping crate will be placed on a trailer for movement around the site. Placement of the sluicer on each vessel will be accomplished with the use of a crane having sufficient reach and load capacity to permit placement on any of the tanks. The sluicer will rest on a tripod framework designed to withstand the operational forces and to minimize the loading on the riser on each tank. The sluicer will be lightly secured to the tank riser flange to prevent "cocking" during operation. Photographs of a typical sluicing system are provided as Fig. 4.2.

C. Operation and Control Trailer

Operator dependent controls will be placed on this unit and will have an umbilical bundle of required length to mate with affected equipment. Equipment defined for remote control location is sluicer, video camera and lights, valves, hydraulic pump motor including output flow and pressure, and air compressor. A panel to mount pressure and flow indicators is required.

D. Heating, Ventilation, and Air Conditioning (HVAC) Trailer: See Sect. 4.2.6, Tank Confinement Exhaust System Requirements.

The HVAC Trailer will provide a unit to house HEPA filter(s), fan and stack to provide a negative atmosphere within the tank(s), and a clean air stream to atmosphere while the task is being accomplished.

E. Demister Trailer: See Sect. 4.2.6, Tank Confinement Exhaust System Requirements.

4.2.2.3 Detailed description of components

1. Low Pressure Unit

A unit to pump liquid from the sluice tank to the recycle tank, remove tramp iron nodules (thought to be present from oxidation of the carbon steel vessels) and reduce large lumps of sludge material, by a grinder, to a size that can be handled by the pump.

The low pressure pump chosen for this project is a progressive cavity-positive displacement pump with flow requirements of 200 gpm @ 30 psig. The pump of choice, due to its historical reliability at ORNL, is the Moyno pump as manufactured by Moyno Industrial Products. However, other manufacturers such as the Tarby Pump Co., Monoflo by Ingersoll-Dresser, and Netzsch PC pump by Nemo Pump Co. will be considered and evaluated as an equal alternative. This pump will be powered by a hydraulic motor allowing complete control of the flow and pressure at all times. A mechanical seal will be used on the pump. The suction spool (furnished by module fabricator) will have a valved prime/flush water and relief piping connection integral to the spool. As part of the suction spool assembly, a flanged connection to attach a grinder will be furnished. A flanged hose connection will be provided to attach to the suction side of the grinder. A discharge spool (also furnished by module fabricator) will be double contained and be supplied with a high pressure cut-off switch, attached to the primary piping, a low pressure cut-off switch attached to the annulus piping, and a pressure relief line returning to the pump suction spool, in which a rupture disc is located. Hydraulics to power this pump will come via hoses from a hydraulic manifold and control system.

An in-line filter/strainer similar to the Filtomat Filter will be placed in the suction piping to reject any particle larger than a 5/16-in. cross-section (~50% of the nozzle exit diameter). This strainer will have automatic backflush capability using no external source of flushing media. Materials entrained in the filter/strainer backflush will be piped back to the tank of origin.

2. High Pressure Unit

A unit to pump liquid from the recycle tank to the sluice tank at the volume and pressure (200 gpm @ 200 psig) required to sluice the sludge within the subject tanks and to transfer the final slurry to the MVST Facility.

The high pressure pump chosen for this project is a progressive cavity-positive displacement pump with flow requirements of 200 gpm @ 200 psig. The pump of choice, due to its historical reliability at ORNL, is the Moyno pump as manufactured by Moyno Industrial Products. However, other manufacturers such as the Tarby Pump Co., Monoflo by Ingersoll-Dresser, and Netzsch PC pump by Nemo Pump Co. will be considered and evaluated as an equal alternative. This pump will be powered by a hydraulic motor allowing complete control of the flow and pressure at all times. A mechanical seal will be used on the pump. A suction spool (furnished by module fabricator) will have a valved prime/flush water connection integral to the spool. A discharge spool (also furnished by module fabricator) will be double contained and be supplied with a high pressure cut-off switch attached to the primary piping, a low pressure cut-off switch attached to the annulus piping, and a pressure relief line going back to the suction side of the pump, in which a rupture disc is located. Hydraulics to power this pump will come via hoses from a hydraulic manifold and control system.

3. Hydraulic System

The hydraulic power for the low and high pressure pumps described above is supplied by a hydraulic pump driven by an electric motor sized to meet the demands of the hydraulic system under full load. To provide sufficient hydraulic fluid for all equipment and sufficient cooling resident time, a large reservoir will be provided. Manifolds for feed and return are required. A removable weather shroud for the motor is required. A control panel with a directional valve for each hydraulic loop will be mounted on the Operation/Control Trailer and connected to a disconnect panel on the Pump Trailer via umbilicals. Pressure and flow readout will be provided on the control panel. A removable weather shroud for the disconnect panel is required.

4. Piping

All metallic piping materials for this effort will be schedule 40 carbon steel per ASTM A-106 and will conform to the requirements of ANSI B31.3, Chemical Plant and Petroleum Refinery Piping. Flanges will be 150-lb raised face slip-on or weldneck style. Flange metallic safety shields similar to those furnished by Ramco Mfg. Co. will be supplied for spill/spray control at each flanged connection. Gaskets will be similar to Flexitallic ring style with carbon-graphite filler. Nonmetallic piping will be from 2-in.-I.D. heavy wall, helical wire reinforced chemical transfer hose (such as Goodyear Flexwing series hoses). Containment hose will be 4-in.-I.D. clear polyvinyl chloride (PVC) with helical reinforcement as made by NewAge

Industries. End connections for the hose assemblies will be flanged. Special end effectors will be designed for the double-wall construction.

Suction legs for the tanks will be designed using the sketch provided as Fig. 4.8 as a baseline. Since hoses are to be used for the suction piping and two suction points are to be used, a valve manifold must be furnished.

The 20-in. pipe spool sections shown on Fig. 4.8 are fabricated from 20-in. std.wt. pipe with 10-in. nozzles positioned as shown. These spools provide the mounting surface for the mixing unit, suction leg and connections for the HVAC equipment/ducting. The height of the spool must not exceed that shown on Fig. 4.8.

Piping for the discharge side of the pumps will be double contained and have the safety features described in the Low and High Pressure Unit sections. A connection to attach a Bristol Isolock sampler will be provided.

Piping to transport the final slurry to the MVST Facility will be 2-in. schedule 40 A-106 seamless pipe and will be contained in a 4-in. clear PVC, helical reinforced plastic hose. This pipe run will be supported from its initiation point to the existing valve box located approximately 50 ft west and 285 ft north of the OHF pump/valve vault's northwest corner. Supports will be temporary and will be placed every 15 ft along this route. The terrain slopes considerably so the support post will vary in length to maintain a constant slope of the pipe.

The valve box referenced above will have to be modified to allow the proposed tie-in. This valve box (location shown on drawing P-20013-YA-005 and Fig. 4.9) provided connection of the OHF P-501-2 in. line to the new P-500-2 in. double-contained transfer line. To gain access to this transfer line with the new temporary line, it will be necessary to excavate down on the west side of this valve box to the existing 2-in. carbon steel line. This line will be saw cut and mechanically capped, and then the portion into the valve box will be disconnected from the block valve and removed. This severed segment will be disposed of in an approved manner. A new double-contained stainless steel spool section fabricated to allow extension up to the surface will be installed. Pressure testing of this spool piece will be done before installation, and leak testing will follow installation.

5. Compressed Air System

Air for the Bristol sluicing equipment will be from a compressor delivering 6 scfm @ 100 psig and will have a 20-gal (minimum) ASME Code accumulator. A valved distribution manifold and hose reels (one for each piece of equipment) are required.

6. Valving

Valves for all process streams will be quarter-turn ball valves equipped with automatic fail open operators and will have butt-weld end connections unless otherwise directed by the equipment manufacturer.

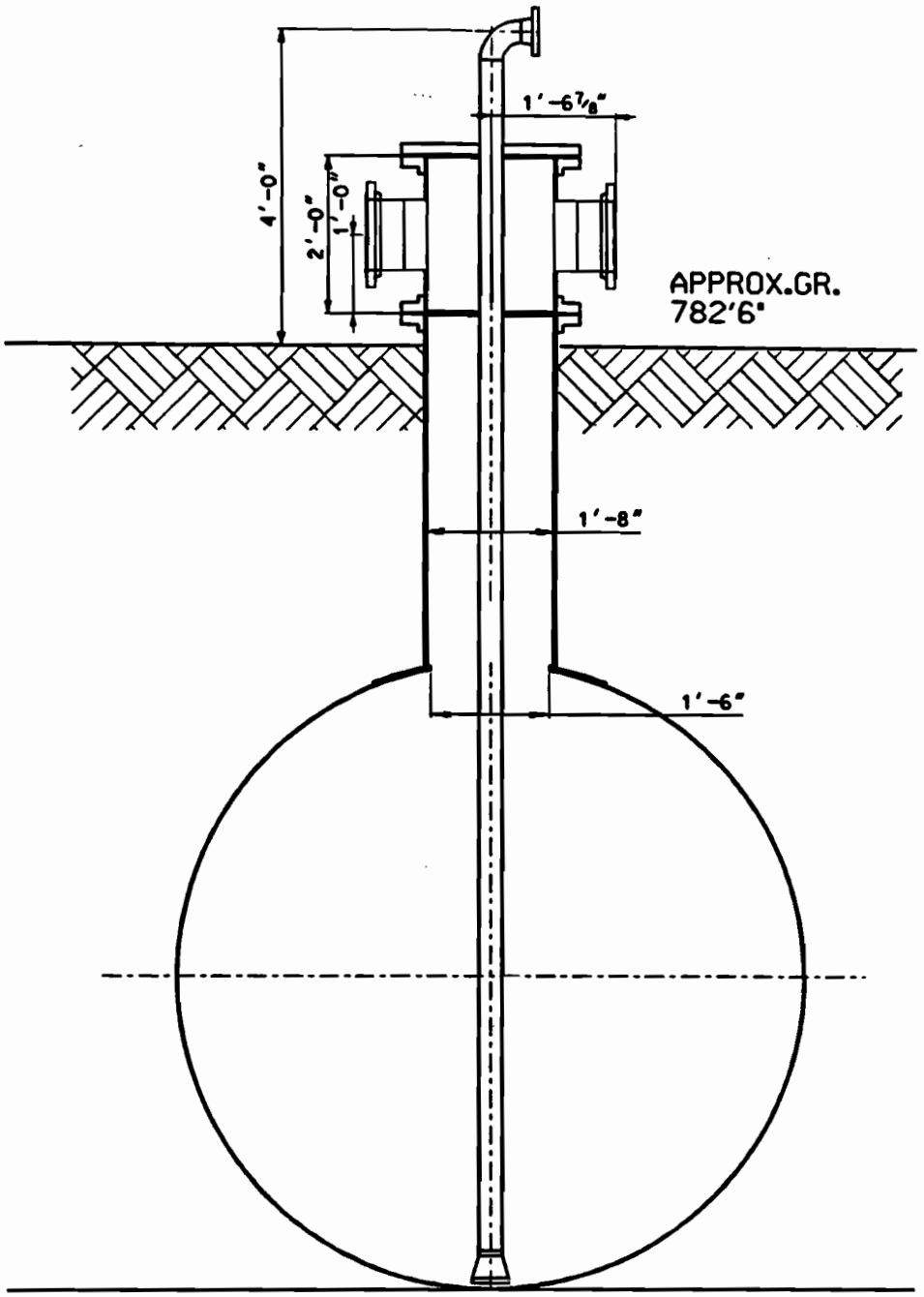

PROPOSED T-1, T-2
CONFIGURATION
SHOWN WITH NEW
20" RISER & SUCTION
LEG

Fig. 4.8 Proposed Riser Installation Sketch

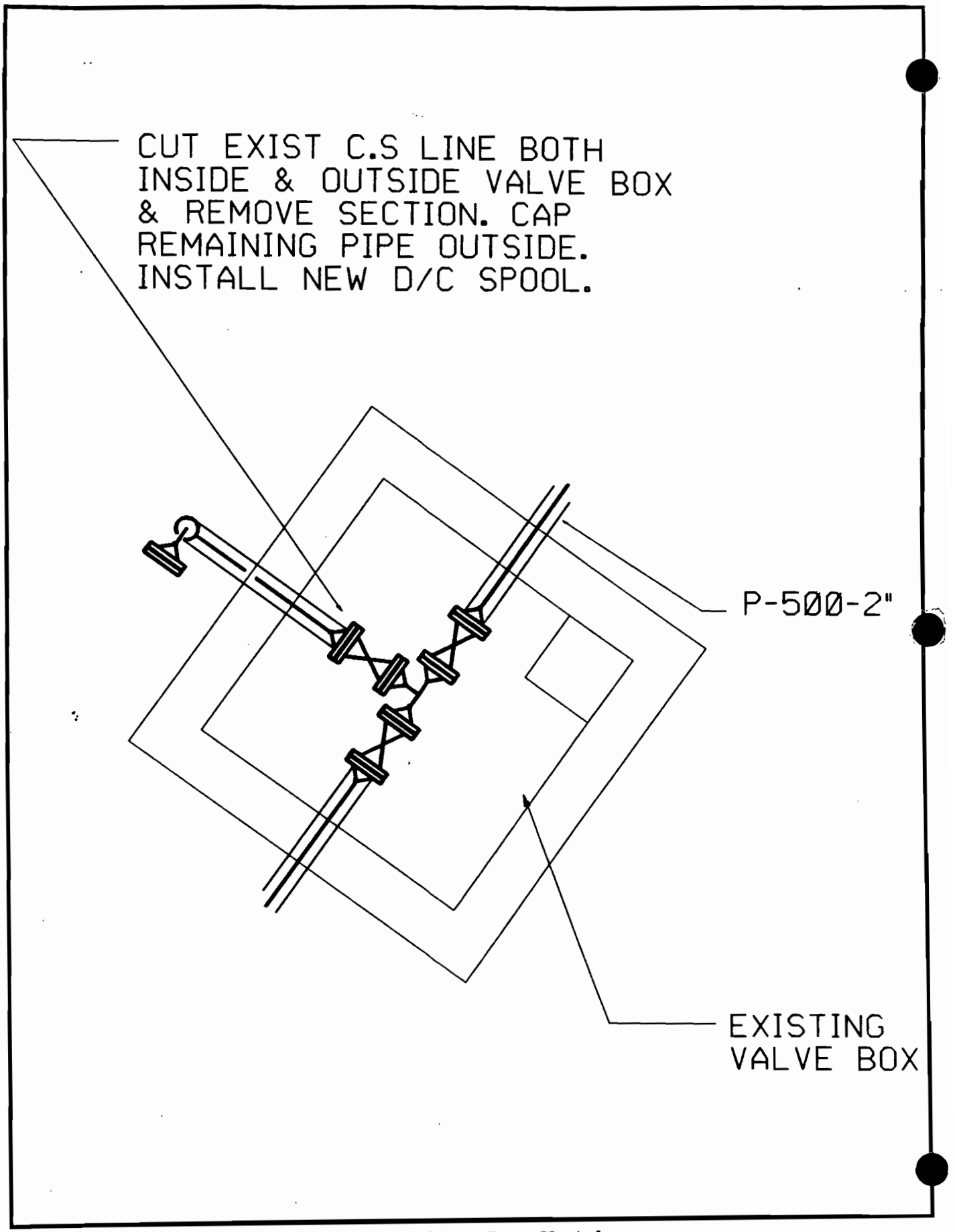

Fig. 4.9 Valve Box Sketch

7. New Access Risers

At a minimum, one new 20-in. flanged riser will be fabricated and installed on each of the subject tanks. This assembly will consist of (1) a 36-in.-diameter by 5/16-in.-thick steel plate rolled to the outside diameter of the subject tank; (2) a 20-in. 150# raised face slip-on flange; and (3) a 4-ft segment of 20-in. std.wt. carbon steel pipe. The flange will be welded to one end of the pipe and the rolled disc centered on the other end and welded in place. This riser **WILL NOT BE WELDED TO THE VESSEL** but, rather, securely fastened with a gasket under the disc via 16 each 3/8- by 1 1/2-in. hex head self-drill screws equally spaced on a 34.5-in.-diameter bolt circle. A hole saw will be fabricated from 18-in. std.wt. pipe segment to which a metal cutting band saw blade will be welded to the outside diameter. In addition three equally spaced cam rollers are attached to the outside of the pipe to maintain centering in the riser. Another method is to mount 8–12 carbide-tipped cutting bits to a 18-in. std.wt. pipe segment creating a hole cutter also using a centering mechanism. The hole saw is then placed in the 20-in. riser and lowered to the tank surface and rotated to cut the desired hole. As the saw is withdrawn up the riser, the slug from the tank is withdrawn and disposed of in an approved manner. Submittal of alternate methods for fabricating this hole saw is encouraged. On tanks T-1, T-2, and T-9 this new riser will be placed on the end of the vessel(s) opposite of existing suction, and on tanks T-3 and T-4 risers will be placed on both ends of each tank. Each riser will meet the secondary containment requirements specified in the FFA.

The new suction leg assembly will be fabricated and installed for tanks T-1, T-2, T-3, and T-4. The mixer assembly will be installed on tank T-9.

Existing suction leg nozzle on each tank is sealed with a blind-flanged connection, and on T-3 and T-4 excavation down to this flange will be required to make modifications. The blind flange will be removed and a new extension added to allow access 12 in. above grade.

8. Process Water

A temporary, appropriately sized firehose line will be routed from the hydrant east of the intersection of the MVST access roads. A backflow preventer will be installed at the hydrant and at the use site. The hose will be routed along the east side of the road, across the weir bridge, and up to the OHF site, a run of 400–500 ft.

Process water manifold on the pump trailer will distribute water for priming/flushing pumps, wash down of contaminated components during and following operation, sluicer spray-down connection and demister spray down. A booster pump will be provided if higher water pressure is required for operational or decontamination use.

4.2.3 Electrical Requirements

4.2.3.1 General

Electrical requirements described in this section will provide electrical power to support the removal of sludge in the OHF tanks. General service electrical outlets will also be provided for project support functions. Electrical requirements are presented in Fig. 4.10, Electrical One Line Diagram.

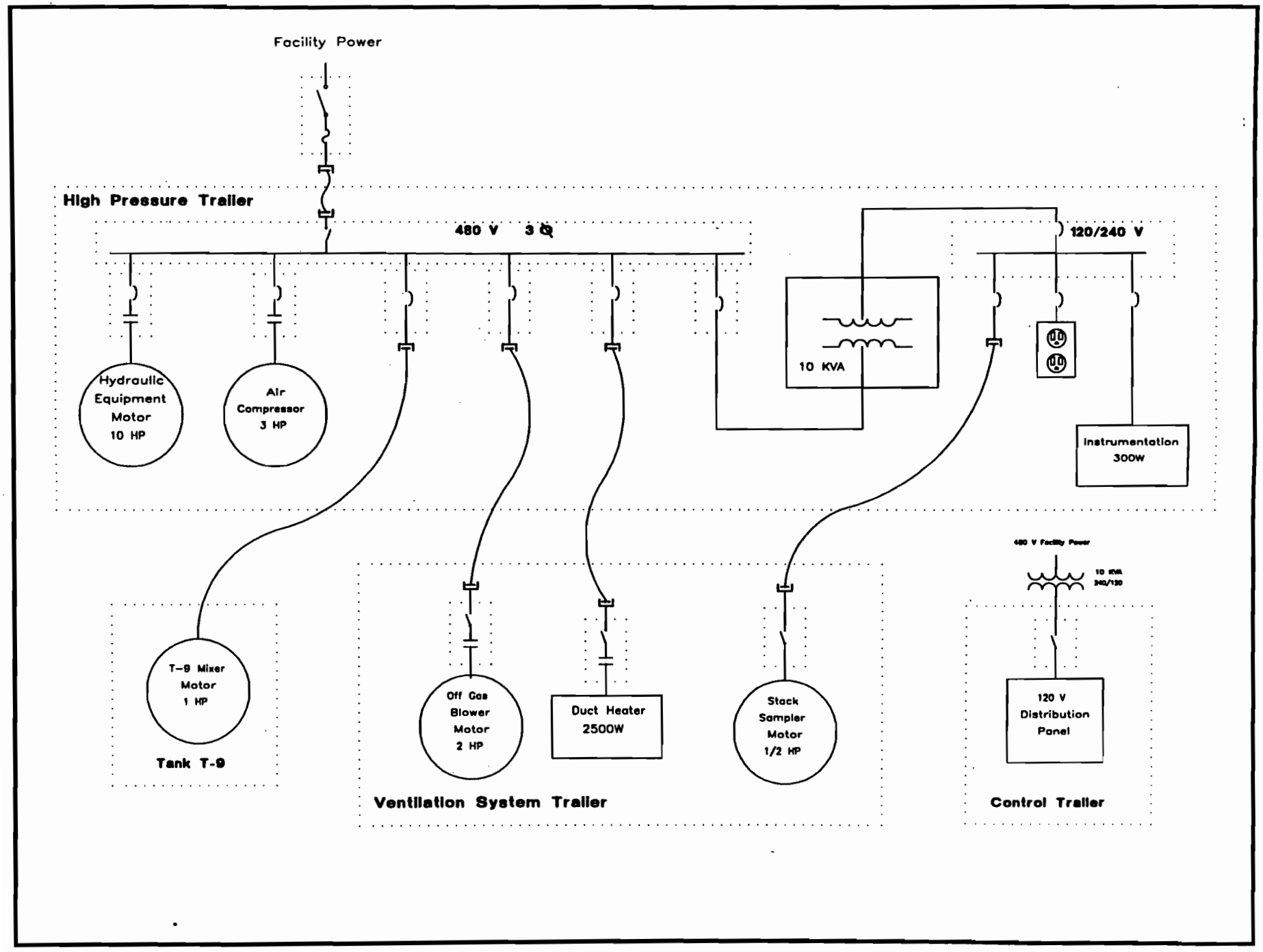

Fig. 4.10 Electrical One Line Diagram

4.2.3.2 Power distribution

The present facility electrical service will be used to provide the necessary power to support the sluicing operations. Power will be derived from the existing 480-V feed servicing the pump house just north of tanks T-3 and T-4.

Tie-in to the 480-V service will be performed at the utility pole located at the northwest corner of the pump house. A fused disconnect switch having a female power receptacle will be mounted on the utility pole. Power from the facility will be fed to the high pressure trailer, where most of the loads are located, via a flexible cord assembly. This flexible connectorized assembly will be constructed of male and female power connectors attached to flexible conduit to protect the wiring and will allow power to be quickly and easily connected to the trailers when they are relocated.

Power on the high pressure trailer will be distributed to the 480-V loads via a weatherproof wireway. Enclosed circuit breakers will tap into the 480-V feed in the wireway. Equipment serviced on the high pressure trailer include a 10-hp hydraulic equipment motor, a 3-hp air compressor drive motor, a 1-hp agitator for tank T-9, and a 10-kVA transformer feeding the 120/240-V distribution panel. This 120/240-V single-phase distribution panel will provide service to the heat tracing, instrumentation, stack sampler, and receptacles. The 2-hp off-gas blower motor and the 2500-W duct heater located on the ventilation trailer will have local enclosed combination starter disconnects. Power will be provided to these remote loads using a flexible cable assembly similar to the one used to provide facility power to the high pressure trailer. Cables subject to physical damage will require rigid protection in addition to the flexible conduit.

The control trailer on the east end of the site will be served from a 10 kVA 480-V—120/240-V transformer. This transformer will tie into the existing 480-V supply lines feeding Building 7853.

4.2.3.3 Facility electrical modifications

To allow adequate clearance for the sluicer placement, one of the electrical services will have to be relocated. This is a 120-V circuit routed from the utility pole at the pump house to the utility pole located in the south area of the site between the two sump pits. This circuit feeds a light on the utility pole and a receptacle at each sump pit. This circuit will be rerouted from the pump house via one of the existing utility poles on the west end of the site.

4.2.3.4 Communications

A cellular telephone will be used to provide telephone communications in the control trailer. During the sluicing/waste transfer operations, personnel in the control trailer will have direct communication with waste management personnel.

4.2.4 Instrumentation Requirements

4.2.4.1 General

Instrumentation requirements described in this section will provide instrumentation and controls to support the removal of sludge in the OHF tanks.

4.2.4.2 Control and monitoring system

The control and monitoring system will have the capability to monitor process variables, control pumps and valves, monitor tank level, and allow input of ventilation system setpoints. A programmable logic controller (PLC) will be used to provide necessary control, monitoring, and interlocking functions for the process. In addition to performing monitoring and control functions, the PLC will provide a means of multiplexing signals to minimize wiring. The user interface will consist of an instrument cabinet housing the PLC and associated alarm annunciators, equipment status indicators, pump start/stop, valve open/close, and critical process variable readouts such as mass flow. This cabinet will be located in the control trailer to minimize operator exposure in accordance with ALARA requirements. The essential equipment will be designed to allow manual shutdown, in the event of a PLC failure.

The PLC will take advantage of a distributed arrangement to minimize wiring runs between the trailers. The central processing unit, input/output modules associated with the operator panel, and the master communications module will be located in the same base in the instrument cabinet. Remote PLC input/output racks will be located on the ventilation trailer and the high pressure trailer. Approximately 25 analog and 30 discrete input/outputs will be processed by the PLC. A block diagram configuration of the system is presented as Fig. 4.11.

4.2.4.3 Process instrumentation

Mass flow and solids content of the liquid/slurry will be monitored using a coriolis mass flow meter located on the high pressure side of pump J-3. This meter and its associated flow computer will have the capability to determine the mass flow and the percent solids content in the stream. This type of flow sensor provides a nonintrusive means of monitoring the liquid/slurry stream. The accompanying flow transmitter will provide flow, density, and temperature signals to the flow computer that will be capable of displaying density, % solids, mass flow, and flow totalization, and will provide a user configurable output to the PLC.

Conductivity probes will be used to detect the presence of liquid in the tank well. A total of four separate wells will require monitoring: wells for tanks T-1, T-2, T-3/T-4, and T-9. These conductivity probes will be fed to a local relay enclosure to provide a local visual and audible alarm for the presence of liquid in the wells.

The liquid level in each of the sluice tanks (T-1, T-2, T-3, T-4) will be monitored using a conductivity probe to detect a high liquid level condition. Continuous level will be monitored in the recycle tank (T-9) using a noncontact ultrasonic level measurement device. Air-operated control valves will be controlled and monitored remotely from the control trailer instrument cabinet. The position of the valve will be controlled by activating the associated solenoid valve. The valve position switch will be monitored by the PLC to provide remote indication of the valve position in the control trailer instrument cabinet.

4.2.4.4 HVAC instrumentation

Instrumentation requirements for the HVAC system are provided in Sect. 4.2.6.2, System description.

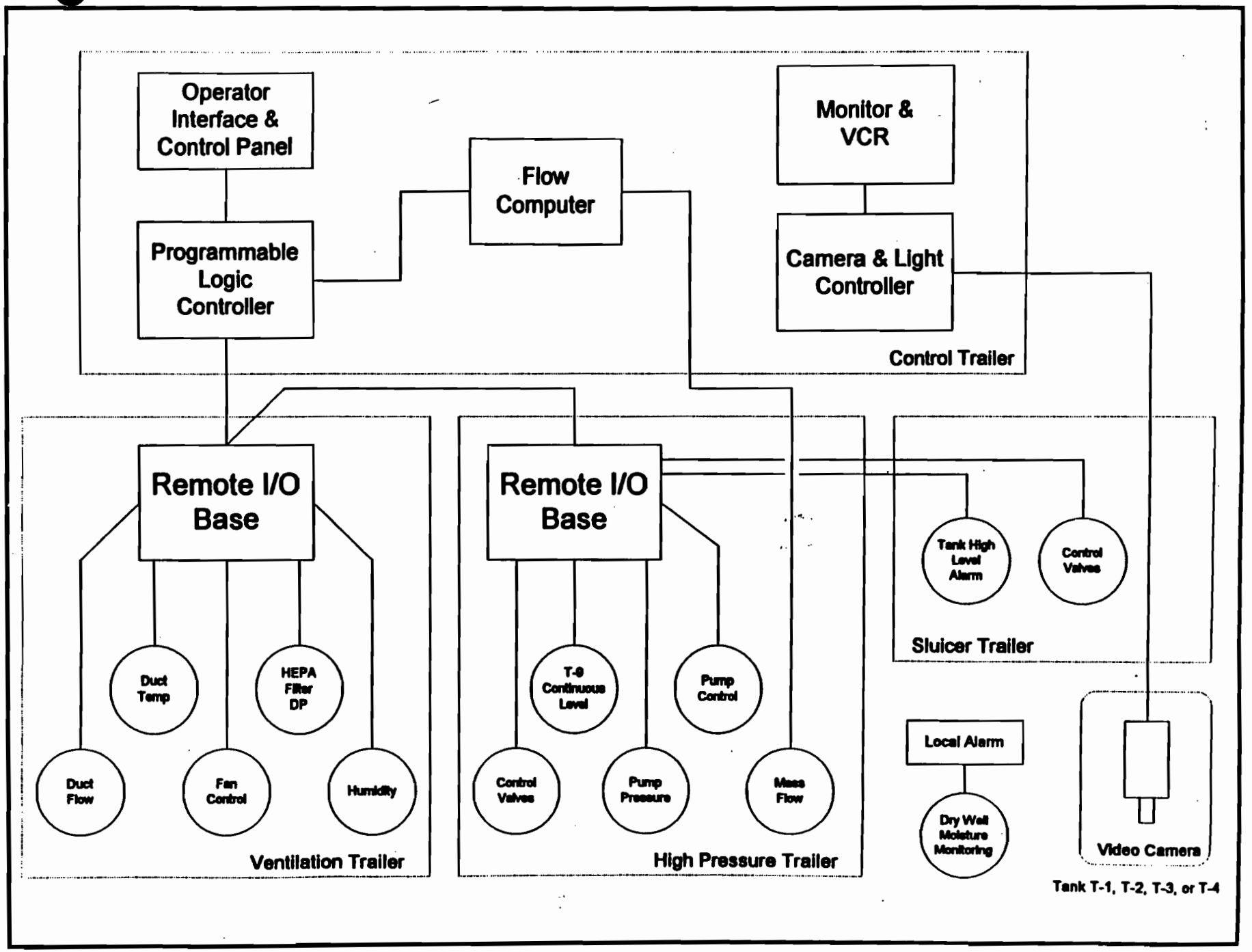

Fig. 4.11 Instrumentation Concept Diagram

4.2.4.5 Video system

A radiation tolerant color video camera with zoom capabilities and high intensity lighting will be mounted to the sluicer to monitor in tank sluicing activities. This will allow the camera to pan and tilt with the sluicer nozzle. Camera zoom capabilities and lighting will be controlled from a remotely located camera control unit in the control trailer. The video signal will be fed from the camera control unit to a VCR and color monitor in the control trailer. The camera lens will be periodically cleaned using a light spray of process water.

4.2.4.6 Cabling

Instrumentation and control signal connections from the process equipment trailers to the control trailer as well as inter-trailer connections will be made using connectorized cable assemblies. The cable assemblies will be similar to those used to provide electrical service to the trailers. This will allow the instrument and control system to be quickly and easily connected and disconnected when the trailers need to be moved.

4.2.5 Civil Site Requirements

4.2.5.1 General

Access to the site will be through post 24 and along Burial Ground Access Road as shown on Fig. 4.12. The contractors' parking area will be located off of First Street as shown on Fig. 4.12.

4.2.5.2 Site development

The sluicing operations will be run from equipment located directly above the underground tanks. The sluicing equipment, HVAC equipment, and the demisters will all be mounted on separate trailers and will be moved from tank to tank during the project.

It is anticipated that an area of approximately 100 ft × 80 ft will be covered with a woven geotextile fabric, then topped with 4 in. of compacted stabilized aggregate base to provide a stable and clean working surface. This clean working area is identified on Fig. 4.13 that also shows existing structures at the site.

A control trailer will be located east of Building 7853. Areas will be designated for "clean" equipment storage and lay down, and also for "dirty" or contaminated equipment. A radiation boundary will be established and an area designated for a decon and dress-out trailer or tent will be located. A temporary safety shower and eyewash will also be set up. Access to Building 7853 must be maintained for the duration of this project.

An aboveground pipeline will be installed from the sluicing equipment trailer to the existing LLLW valve box located northwest of Building 7852. The pipeline will require a small number of small concrete foundations for support piers. The access road adjacent to the valve box will be blocked by the aboveground temporary transfer pipeline for the duration of the project.

Water for the sluicing operation will be supplied onsite by running an aboveground temporary 4-in. line from an existing fire hydrant located near Building 7860.

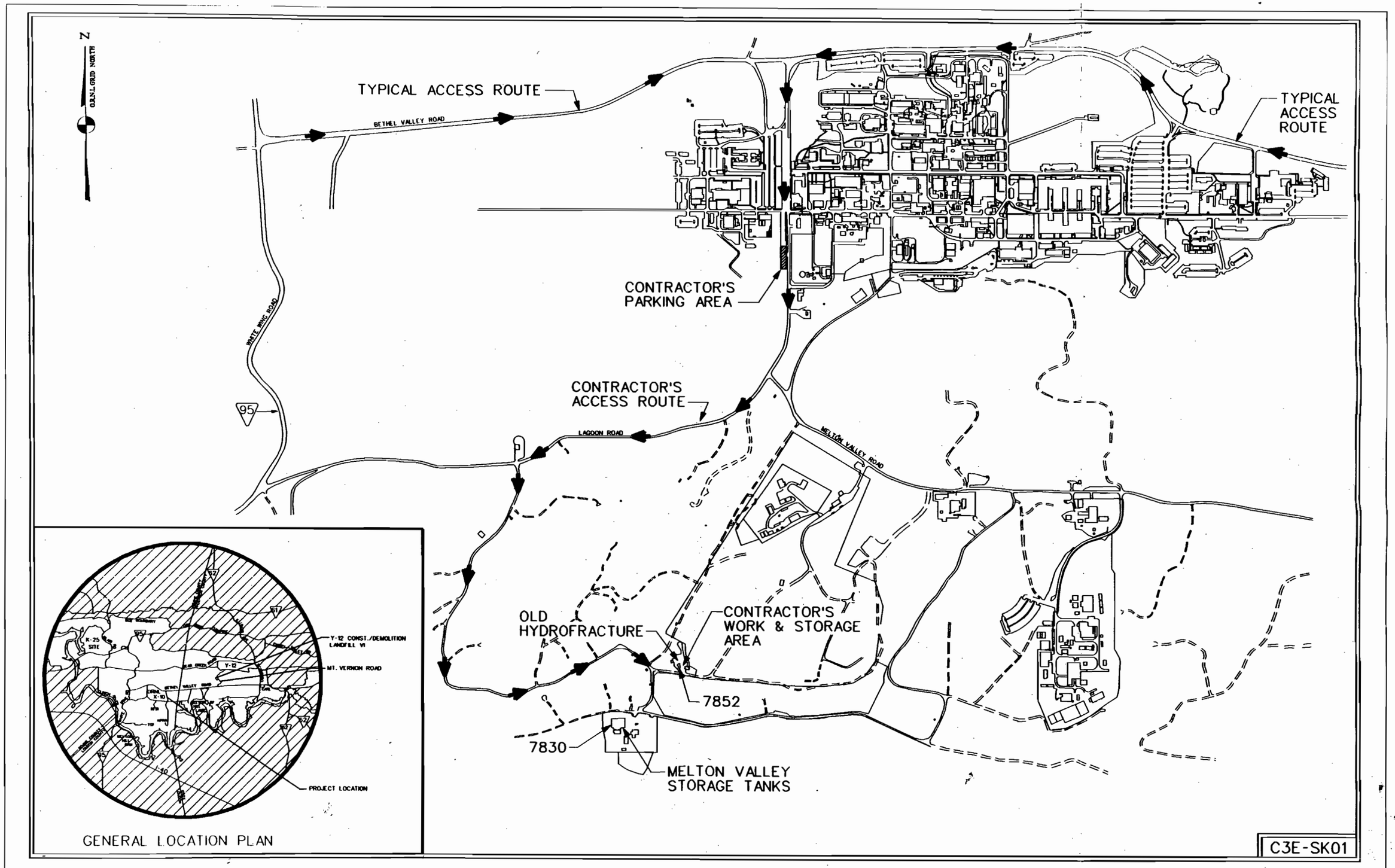

Fig. 4.12 Site Access

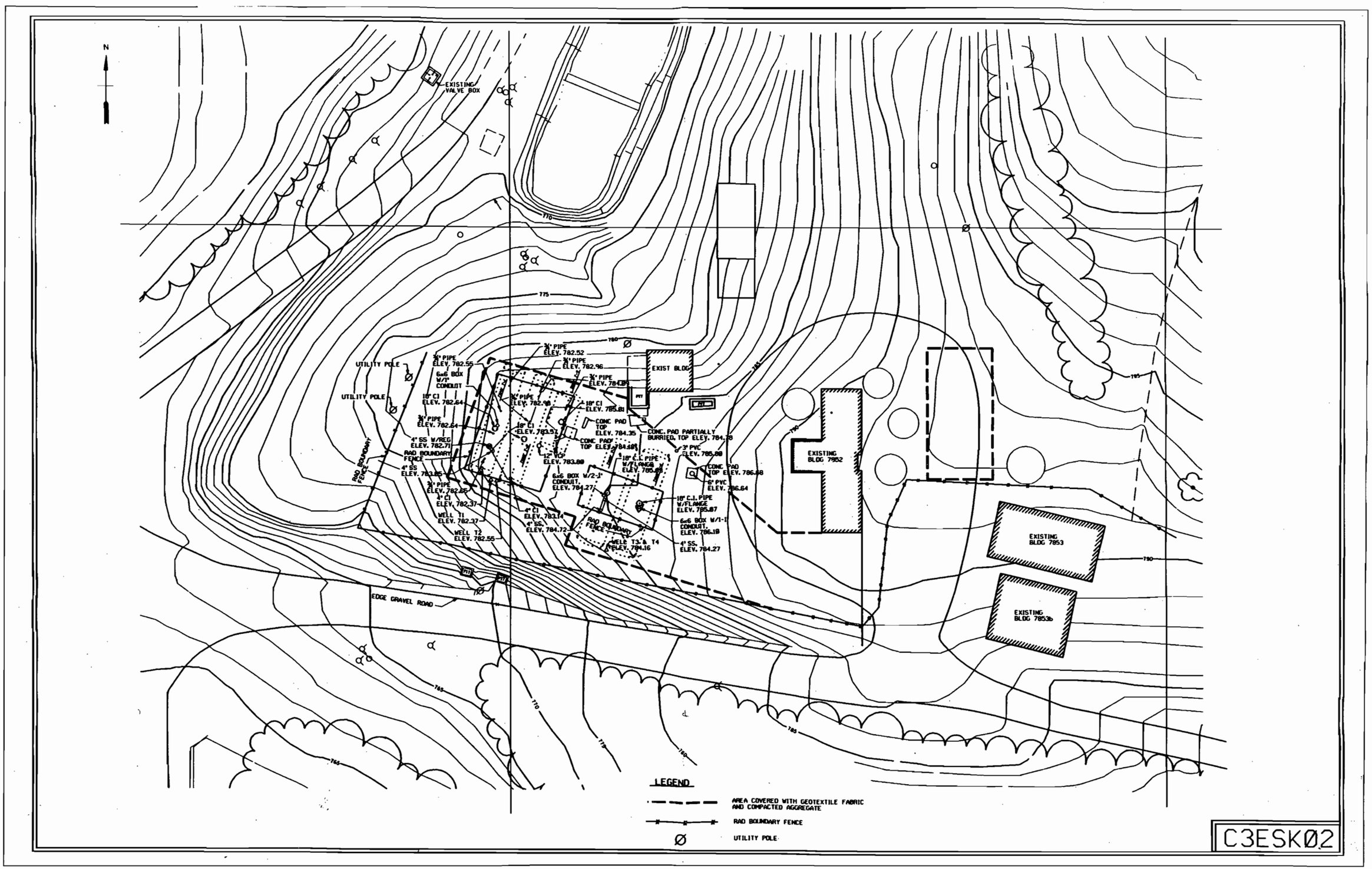

Fig. 4.13 Existing Structures and Proposed Work Area

4.2.5.3 Reference drawings

C3E SK01 SITE ACCESS PLAN
C3E SK02 SITE LAYOUT PLAN

4.2.6 Tank Confinement Exhaust System Requirements

4.2.6.1 General

A tank confinement exhaust system will be provided for the OHF Tanks Content Removal Project to minimize the release of airborne contaminants from the tanks generated during processing of the tank contents. Figure 4.14 (H3E SK01) identifies the proposed air flow diagram for the project. The tank confinement exhaust system will maintain the sluice tank and the mix tank at a negative pressure with respect to atmosphere during sluicing operations (i.e., when the tanks are sealed). The tank exhaust system will also be designed to have sufficient capacity to maintain a minimum inward air velocity of 100 linear ft/min through an open 20-in.-diameter riser on the sluice and mix tanks. The system description and design requirements identified below may require modifications pending the results of the project's safety analysis report.

4.2.6.2 System description

Air Inlet. A HEPA-filtered air inlet will be provided for the sluice tank and the mix tank. The HEPA filter will provide confinement in the event of a flow reversal from the tank. A 2-in. (30% efficient) prefilter will be provided upstream of the HEPA filter. The HEPA filters and filter housings will be similar to those described in later sections. A pressure relief damper will limit the tank pressure to a maximum negative pressure of 0.3-in. wg during sluicing operations. The air inlets will be skid mounted and will connect to the tanks at the riser manifolds.

Demister Trailer. The demister trailer will contain the demister (i.e., mist eliminator) and the electric duct heater. The demister trailer will be a tandem axle trailer with leveling jacks. The trailer will be suitable for towing behind a pick-up truck. The demister trailer will be located adjacent to the riser manifold to permit gravity drainage of the liquid effluent back to the sluice tank.

Demister. The mist eliminator will be capable of removing (1) at least 99% by weight of the entrained moisture and (2) at least 99% by count of 5 to 10 micron diameter droplets. The demister will be sized for an airflow capacity of 265 acfm. The moisture-loading capacity of the mist eliminator has been estimated by Parallax at 4.5 L/h. The mist eliminator pad will be a mesh design due to the potential for particulate loading. The pad will contain two layers of mesh. A course pad will be on the bottom layer to minimize the potential of particulate clogging, and a fine layer will be on top for efficiency in removing the mist. Air flow will enter the mist eliminator vessel horizontally below the mesh pad, travel vertically up through the mesh pad, and exit the mist eliminator vessel horizontally above the mesh pad. The mesh pad will be removable via the bolted blind flange on top of the mist eliminator vessel. A spray nozzle will be provided inside the mist eliminator for backwashing the mesh pad with process water. The demister will be backwashed based on a rise in pressure drop due to particulate loading or due to a rise in surface radiation levels detected during periodic surface scans. Liquid removed by the mist eliminator and liquid generated due to backwashing will drain from the bottom of the mist eliminator and back to the tank being sluiced. The mist eliminator will be mounted on support legs and located within a collect basin/pan for secondary containment of the liquids. The drain line will be a double-contained hose and/or

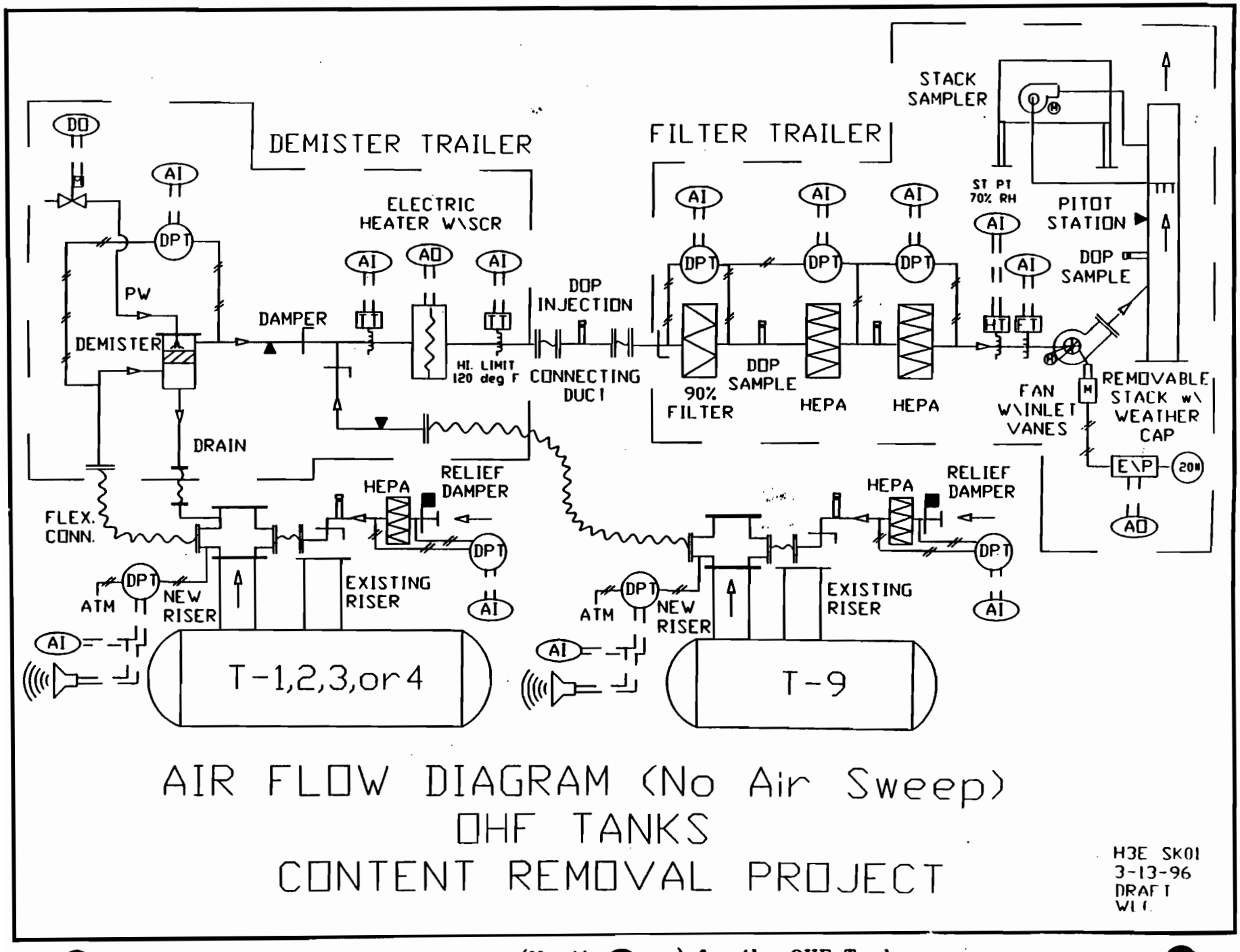

AIR FLOW DIAGRAM (No Air Sweep)
OHF TANKS
CONTENT REMOVAL PROJECT

Fig. 4.14 Air Flow Diagram (No Air Sweep) for the OHF Tanks

pipe. The material of construction of the mist eliminator vessel will be carbon steel. The mist eliminator pads will be 304 stainless steel.

Other mist eliminator designs were considered. A cylindrical fiber bed was investigated; however, the manufacturer of this style mist eliminator did not recommend its use due to the potential for particulate clogging. The idea of compressing a mesh pad between two ductwork flanges without a containment housing/vessel was also considered. This concept would create a potential for liquid leaks and would create a contamination-handling problem each time the mesh is moved to the next tank. A perforated plate-style mist eliminator was also ruled out due to the potential for particulate clogging and the contamination-handling problem created. A zig-zag baffle or wave plate design was also ruled out due to their lower efficiency.

Electric Heater. The 2.5-kW finned tube electric duct heater will also be located on the demister trailer. The heater will be located downstream of the demister and downstream of the branch exhaust connection from the mix tank, T-9. The airflow rate through the heater has been estimated at 510 acfm. The heater will be sized to exceed the manufacturer's minimum face velocity requirements. A 12- by 12-in. duct heater size has been selected for this engineering study. The electric heater will be capable of reducing the maximum expected relative humidity of the entering airstream mixture to approximately 70% at the filter inlet. The heater will be a flanged connection design to permit replacement without metal cutting or welding. Safety controls for the heater will include primary and secondary overtemperature cutouts and an airflow switch. A NEMA 4 weatherproof terminal box will be required due to the outdoor installation. A SCR will provide 0 to 100% proportional control of the heater via the project's PLC. Power of 480V/3 Ph/60 Hz will be required for the heater.

Interconnecting Duct. An interconnecting carbon steel welded duct will connect the demister trailer to the filter trailer. The interconnecting duct will contain a DOP injection port to permit in-place DOP testing of the HEPA filters. Minor misalignments in the trailers can be accommodated with flexible connections similar to Metraflex rubber pipe or flexible metal connectors.

Filter Trailer. The filter trailer will contain the 90% efficient prefilter, two HEPA filters in series, exhaust fan, stack, and stack sampler. The filter trailer will be a tandem axle trailer with leveling jacks. Trailer will be suitable for towing behind a pick-up truck. The filter trailer can be located away from the demister trailer to minimize congestion at the tank being sluiced.

Prefilter. A 90% efficient prefilter will be installed upstream of the HEPA filters to extend the life of the HEPA filters. The prefilter will be a nominal 24 × 24 × 12 in. filter using a gasket seal. Prefilters will be furnished and installed by the facility manager.

HEPA Filters. Exhaust from the sluice tank and the mix tank will be filtered through two HEPA filters in series before being exhausted to the atmosphere as required by ORNL Rad Protection guidelines for the types and quantities of isotopes anticipated. HEPA filters will be nominal 24 × 24 × 12 in. filters using a gasket seal. All HEPA filters will be nuclear grade and will be furnished and installed by the facility manager. HEPA filters will be required to pass an in-place DOP test in accordance with ASME N510.

Filter Housings. Bag-in/bag-out, 304-L stainless steel, side-access filter housings will be provided for the 90% efficient prefilter and HEPA filters. Filter housings will be suitable for gasket seal filters. A drain line with ball valve will be provided on the filter housings to permit inspection

for liquids collecting in the housings. The filter housings will comply with applicable sections of ASME N509 and will be factory leak tested in accordance with applicable section of ASME N510. Filter housing will be equivalent to Flander's bag-in/bag-out containment housings.

Exhaust Fan. The carbon steel exhaust fan will be located downstream of the HEPA filters. The airflow capacity has been estimated at 510 cfm for this engineering study. The exhaust fan will have a backward inclined wheel and inlet vanes for airflow regulation. Modulation of the inlet vane damper operator will require 20# instrument air. Power of 480V/3 Ph/60 Hz will be required for the fan motor. The drive arrangement will be an arrangement 10 with V-belt drive and weatherproof cover. Flexible connections and vibration isolators will be provided to isolate the vibration of the fan from the trailer, stack, and ductwork. The fan will be AMCA rated. Exhaust fan will be equivalent to a Barry Blower series 61 Industracon Fan.

Stack. The 9-in.-diameter exhaust stack will be constructed of carbon steel. The stack will contain a weather cap to minimize rain water entering the stack. A DOP sample port will be provided in the stack to allow a sample to be taken downstream of the exhaust fan. The stack height will be sufficient to provide a minimum of five unobstructed duct diameters from the fan connection to the stack sampling probe and a minimum of two unobstructed duct diameters downstream of the stack sampling probe. The stack will be bolted to the filter trailer and the exhaust fan to permit disassembly of the stack during transportation of the trailer.

Stack Sampler. A stack sampler will be provided for this project as directed by the ORNL Air and Special Monitoring Group to verify effluents do not exceed 40 CFR 61 Sub H (NESHAP) standards for radionuclide emissions. Source term values for the stack emissions were estimated by Parallax. These estimates were provided to David Cunningham of the ORNL Air and Special Monitoring Group. David was going to give these estimates to Frank O'Donnell to assess the impact on the effective dose equivalent for the site. The stack sampler and the stack probe will be procured from the ORNL Air and Special Monitoring Group. The sampler will be interlocked with the exhaust fan to permit sampling only during operation of the exhaust system and the tank sluicer. The sampler will require power of 120 V/1 Ph/60 Hz for the sampler pump and instrumentation. A 120-V weather proof receptacle will be provided on the filter trailer to support the air sampling and DOP testing personnel.

Instrumentation and Controls. Control and monitoring of the tank ventilation system will be accomplished via Instrumentation's PLC located in the control trailer. Remote monitoring and control of the tank ventilation system will provide assistance in maintaining operator exposures to ALARA. If local monitoring and instrumentation were provided, the operators would be required to inspect gages at the demister and filter trailers prior to operation each day. Parameters to be monitored will include sluice tank and mix tank pressures with respect to atmosphere; pressures drops across the demister, prefilter, and HEPA filters; air entering and air leaving temperatures across the heater; and the exhaust flow rate. The electric heater will be controlled based on the relative humidity monitored downstream of the HEPA filters. The exhaust fan inlet vanes (and fan capacity) will be controlled based on a set point selected by the operator. This operator selected set point will be overridden if the differential pressure transmitter on the sluice tank or mix tank senses a loss of negative pressure in the tanks. The control system would then open the inlet vanes on the exhaust fan and pull air through the open riser. A loss of negative pressure in the sluice tank or mix tank will sound an alarm at the control trailer.

4.2.6.3 Design requirements

Heat Loads. No heat loads have been identified inside the tanks that would impact the tank exhaust system design. No temperature restrictions have been identified for the tanks.

Pressurization. The tank confinement exhaust system will maintain the sluice tank and the mix tank at a negative pressure with respect to atmosphere during sluicing operations (i.e., when the tanks are sealed).

Flow Rates. The tank exhaust system will also be designed to have sufficient capacity to maintain a minimum inward air velocity of 100 linear ft/min through an open 20 in. diameter riser on the sluice and mix tanks. Tank air flow capacities will also take into account estimates of tank in-leakage and the displacement of volume due the 200 gpm sluicing pump.

Confinement. Primary air flow confinement will be provided for the tanks via the tank exhaust system. Discussions were held on the issue of providing secondary air flow confinement for the tank sluicing operations. To obtain secondary air flow confinement of the operation a tent(s) or enclosure(s) would have to be constructed over the operations area and a negative pressure maintained on the tent(s)\enclosure(s). It was concluded from these discussions that secondary confinement was only required for the liquid handling systems.

Air Sweep vs. No Air Sweep. Two design concepts were proposed for the tank ventilation system. One concept was to not have an air sweep in the tanks as shown in Fig. 4.14 (H3E SK01). The other concept was to have an air sweep in the tanks as shown in Fig. 4.15 (H3E SK02). The concept for using an air sweep in the tank was ruled out due to the following reasons. (1) Based on directions from project team members, there is not a concern for flammable (e.g.; hydrogen) gases or organic vapors being generated inside the tanks that an air sweep could aid in removing. (2) No heat generation or upper temperature limits have been identified for the interior of the tanks that an air sweep could be of assistance. (3) Parallax has expressed a concern that an air sweep would carry more effluent out of the tank and possibly impact the safety classification of the tank ventilation system. (4) The project team did not feel an air sweep would be beneficial in improving camera visibility by removing mist created by the high pressure water spray or by removing condensation dripping inside the tanks. Based on discussions of these issues, an air sweep is not being proposed for the OHF tanks.

Shielding. Shielding requirements pertaining to the ventilation systems are discussed in Sect. 4.2.8, Design Requirements for Radiation Protection.

4.2.6.4 Other considerations

1. Only one 20 in. riser on the sluice tank and the mix tank may be opened at any one time, to maintain the 100 ft/min velocity at the opening.

2. New risers will be installed on all five tanks.

3. New risers will be fabricated from 20-in. schedule 20 pipe.

4. The tank exhaust system will only operate during the tank cleaning operations.

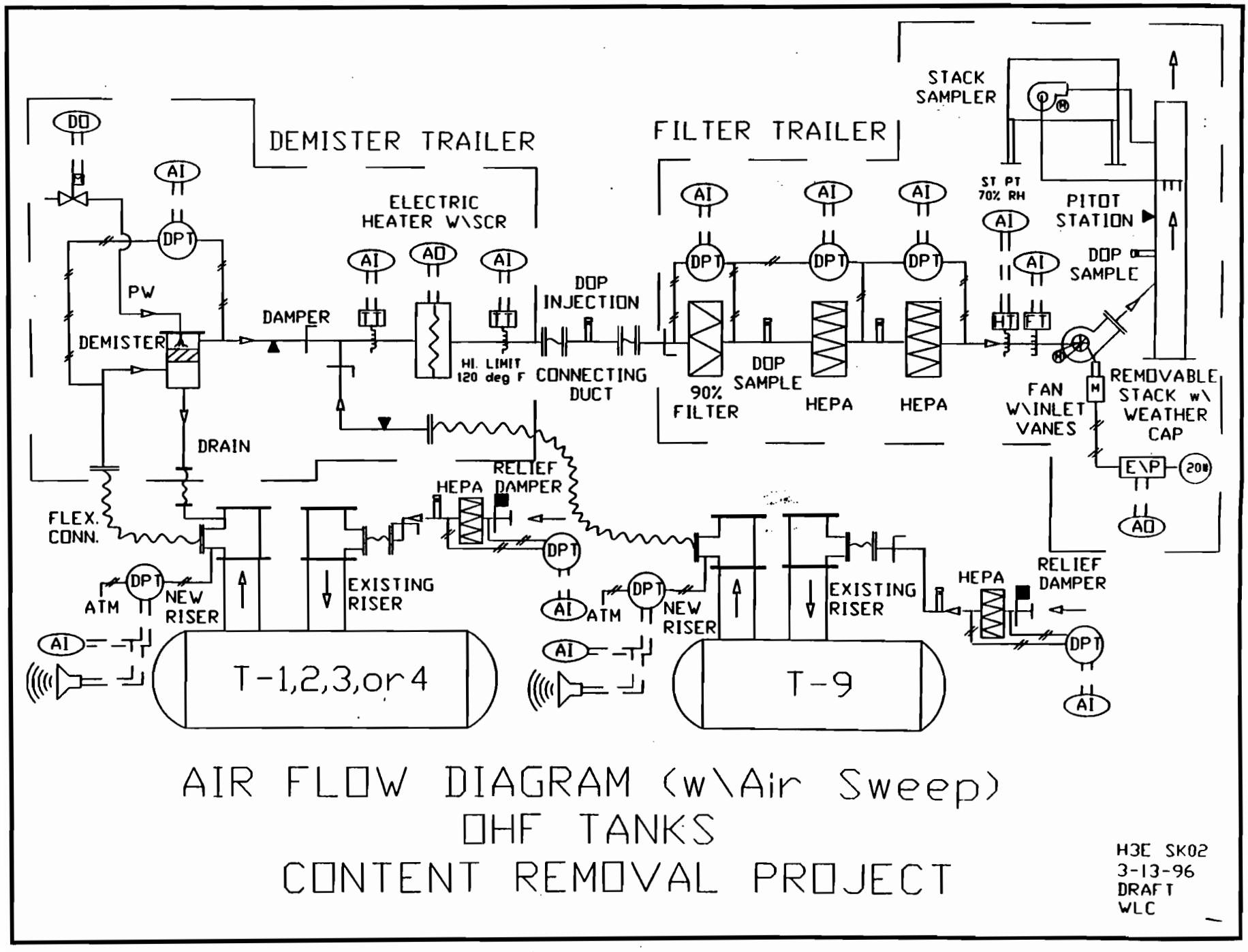

AIR FLOW DIAGRAM (w\Air Sweep)
OHF TANKS
CONTENT REMOVAL PROJECT

Fig. 4.15 Air Flow Diagram (W/Air Sweep) for the OHF Tanks

5. Since the potential for a flammable mixture is not expected inside the tanks, a fire suppression system will not be provided for the tank ventilation system.

6. Procurement of exhaust system components may have lead times of 12 to 16 weeks.

7. To prevent a flow reversal from the existing tank exhaust system, blind flanges will be inserted at the flange connections downstream of the existing tank filters.

8. Utilization of the existing tank exhaust system after the tank contents have been removed will be determined by the facility manager.

9. There is no redundancy (i.e., parallel filter trains or stand-by exhaust fans) proposed for the exhaust system due to the temporary operation of the process.

10. Emergency power is not being proposed for the exhaust system since the operations can be shut down if there are any problems.

11. Based on direction from Process Engineering, the existing tank air sparging system will not be used during the tank content removal operations.

4.2.6.5 Reference Sketches

H3E SK01
H3E SK02

4.2.7 Structural Requirements

Structural Integrity of the Tanks. The structural integrity of the tanks was evaluated using the methodology outlined in "A Method for Evaluating the Structural Integrity of Buried Liquid Low Level Waste Tanks" by J. H. Kincaid, LMES. This method was presented at the WM '93 Symposium on Waste Management, sponsored by the American Nuclear Society.

A finite element analysis was performed using the computer program ABAQUS Version 5.5. Soil pressure and equipment surcharges were applied as cosine functions with a maximum at top of the tank and zero at the sides (this load model is similar to those used for analyzing buried pipe and generally yields conservative results). The sluicing load was applied over a 1-in. square surface. The soil/tank model includes the resistance to outward movement provided by the soil.

Three loading conditions were investigated for each tank: normal earth pressure, sluicing load, and an equipment surcharge. Summary information and typical deformed shapes are included in Appendix H.

<u>Normal Earth Pressure Plus Sluicing Load:</u>

Normal earth pressure load was based on 4 ft of earth fill plus 6 in. of gravel above the top of each tank. A sluicing load of 150 lb was based on the flow characteristics of water leaving the sluicer nozzle (i.e., the mass flow rate and velocity of the water jet).

The tank stresses due to the water sluicing load were found to be insignificant compared to the stresses from normal earth pressure. Additionally the maximum earth pressure stresses occurred on the sides of the tank (at approximately 10 and 2 o'clock) while the maximum sluicer stresses occur at the bottom of the tank. All stresses remained low for all cases investigated. Tank buckling due to wall thinning under normal earth pressure was the limiting factor.

Since buckling has not occurred (per videotape review), it is unlikely that the induced stress due to the sluicing load will cause a structural problem.

Equipment Surcharge:

The ability of the tanks to carry an equipment surcharge load is dependent on how an equipment load is distributed through the soil above the tank, the tank diameter, and tank wall thickness. For the sake of this evaluation, the equipment load was conservatively assumed to spread at ½ to 1 so that a 6-in. bearing surface at top of ground spreads to 5 ft at the top of tank. The upper limit wall thinning due to corrosion was assumed to be 1/4 in., based on 2 mil per year on inner surface and 4 mil per year on the outer surface.

A maximum allowable concentrated equipment load above tanks T-3 and/or T-4 of 19,000 lb provides a factor of safety against failure of 2.0. Equipment loads of 19,000 lb may be placed anywhere above T-3 and T-4 but should be no closer than 5 ft on center. Since this capacity is based on a remaining wall thickness of 3/8 in., it is recommended that the thickness be verified when the new risers are installed.

Since the original wall thickness of tanks T-1, T-2, and T-9 is not known, it is not possible to determine an allowable equipment load with any level of confidence. Accordingly, it is recommended that an allowable equipment load for these tanks be determined later based on wall thickness measurements made when the new risers are installed.

Pipe and Hose Supports. Carbon steel, ASTM A106, piping will connect the pump trailer and the existing valve box. The piping will be supported for dead load and any anticipated lateral loads. Pipe supports will be easily removed after use. Suggested support configurations include Grinnell Fig. 264 attached to schedule 40 steel pipe (similar to Y-ES-4.5-2, PS-1) enclosed in stacked, solid core masonry block. For lateral stability, the height of the masonry will not be greater than the least dimension of its length and width. Additional crushed stone may be provided below the masonry block to provide a level bearing surface.

Suction hoses will require support so that the slurry will drain back to the tank of origin in case of a pump failure. Suggested methods of support include a steel channel with flanges pointing upward. The channel would span from the pump trailer to the ground adjacent to the tank with intermediate supports as necessary. The suction hose would be rest between the flanges of the channel.

Shielding. A shield wall will be required adjacent to the pump trailer, on the control trailer side. The wall will be 6 ft tall and extend beyond the limits of the pump trailer. The wall will provide shielding equivalent to 8 in. of concrete. The wall will be easily removed after use. Suggested wall configurations include stacked masonry block with sufficient thickness to assure lateral stability.

Rationale for not including Natural Phenomena Loads. The design intent is to provide for operational loads while minimizing the potential for an accidental release.

Tank loading conditions include (1) sluicing jet plus normal earth pressure and (2) sluicing jet plus normal earth pressure plus equipment surcharge. Pipe support loading conditions include dead load plus operational loads.

The primary reason for not including natural phenomena loads with the sluicing and operational loads is because of the short duration sluicing and operational loads and the low probability of the events occurring simultaneously.

Additionally, there is precedent for not including natural phenomena loads for a structure or facility with a limited future service life. Draft Guide G 420.1.4, *Interim Guidelines for the Mitigation of Natural Phenomena Hazards for DOE Nuclear Facilities and Non-Nuclear Facilities* states, "For facilities with a remaining service life of less than 5 years from December 1998, it may not be necessary to upgrade the facility for NPH mitigation unless the presence of hazardous materials or other special conditions present an 'exceptionally high risk' to occupants or the public at large. (See ICSSC RP-5)." ICSSC RP-5 titled "ICSSC Guidance on Implementing Executive Order 12941 on Seismic Safety of Existing Federally Owned or Leased Building" states, "Additionally, buildings may be exempted (from seismic evaluation/retrofit) if they will no longer be used by any branch of the Federal government in five years, because they are scheduled to be abandoned, demolished, sold or otherwise removed from government service." While this guidance specifically addresses existing facilities, the same arguments could be extended to any facility.

Lastly, no safety class equipment or safety significant equipment have been identified as part of this project. Consequently, DOE-STD-1020 and -1021 would indicate that no natural phenomena analysis is required.

Load Limits on Access Bridges. The bridges over White Oak Creek (Station No. 3) and Melton Branch (Station No. 4) provide access to the site. Their span lengths are 38 ft and 26 ft, respectively. The bridge superstructures are precast prestressed box sections that were designed to meet H15-44 loading. Since the standard highway loading is somewhat higher (H20-44), Gilbert Commonwealth was asked to analyze the structures and determine the actual live load capacity. The results are presented in a report issued on May 11, 1994.

Gilbert Commonwealth concluded that the live load capacities for the Station No. 3 and 4 bridges are 192 k'/girder and 125 k'/girder, respectively. The corresponding bridge lane capacities, without impact, are 509 k' and 320 k' for Stations No. 3 and 4, respectively. Any heavy equipment that must access the site must be reviewed to assure the these limiting capacities are not exceeded.

Expert Opinion Input Regarding Corrosion. Collective comments include the following.

<u>Phillip Ohl (Westinghouse Hanford, Materials and Corrosion Engineering Staff):</u>

Based on our site conditions, Mr. Ohl did not feel we would have any significant wall thinning due to corrosion. He also said that is unlikely that localized pitting would have progress thorough the full wall thickness. But he said that if it had we may not be aware of it. Mr. Ohl has had experience with tanks that developed numerous small openings which sealed themselves when the

supernatant evaporated on the outside surface of the tanks and formed salts. When they sluiced the tanks, the salts dissolved and they leaked "like a sieve."

John Mara (Savannah River Site USTs):

Mr. Mara's input was as follows: "It sounds like you should be in pretty good shape. If the waste sampled is pH 9-11, you should have had good protection. I'd assume light rusting is due to liquid condensing above the waste. The condensed liquid is usually a fairly low pH, but effect is typically willow general surface corrosion. Is the issue whether the tanks could withstand the waste removal program? If so, I'd suggest that you pump some liquid out and visually examine the tank surface below the original liquid level. Since the waste seems well inhibited, I'd predict that the surface should be pretty clean. We have in the past, made UT thickness measurements below sludge. Use an air sparge to "blow" the sludge away and a 90-degree UT detector. We haven't done this in several years ==> would be a major job in today's environment. I'd maintain that you probably don't need this."

Steve Pawel and Jim Keiser (ORNL, Metals and Ceramics Division):

Steve Pawel assessed the likelihood of corrosion problems on the OHF tanks in October 1995 and with the help of Jim Keiser made a reassessment in March 1996 after viewing the videotapes of the tanks and reviewing the chemical analysis of samples taken from the tanks. The following is the conclusion from their reassessment. "It seems likely based on our observation of the inspection videos and the chemical nature of the stored solutions that only minor corrosion has occurred inside the tanks. Further, various estimates for likely maximum pitting damage from external sources indicates sufficient remaining wall to support water jet sluicing activities."

Conclusion:

Corrosion should be worse on the outside of the tanks than it is on the inside. The inside surface below the contained liquid should be relatively free of corrosion. The outside surface that is adjacent to gravel (i.e., the lower half of the tank) should show less corrosion than the upper half of the tank that rests against earth fill. Consequently the portion of the tank that will receive the sluicing jet load is the portion that has been least affected by corrosion.

Pitting rather than general wall thinning is seen as the most likely corrosion mechanism that could cause a leak. While the consensus of opinion indicates that pitting will not be significant enough to cause a problem, it is not known with 100% confidence that a leak will not occur.

4.2.8 Design Requirements for Radiation Protection

The sludge within the tanks will be removed using a water jet sluicer system. As described in the sections below, this system will consist of a set of pumps, sluicer system, and HVAC equipment that is connected together with aboveground pipelines. This section describes the design requirements for radiation protection.

4.2.8.1 Radiation protection standards and procedures

The applicable radiation protection standards and procedures are listed in Table 4.1.

Table 4.1. Applicable radiation protection standards and procedures

Procedure number	Title
RPP 128	"Radiological Design Requirements for New Facilities and Modifications to Existing Facilities"
RPP 129	"Radiological Optimization"
RPP 310	"Planning Radiological Work"
RPP 330	"Administrative and Phyisical Access Controls"
RPP 350	"Evaluation of Radiological Performance"
RPP 510	"External Dosimetry"
RPP 520	"Internal Dosimetry"
DOE-N-441.1	"Radiological Protection for DOE Activities"
10 CFR 835	"Occupational Radiation Protection"

To determine how these standards translate into specific radiation protection requirements, it was necessary to do radiation field calculations with the available equipment layouts. These calculations are described in Appendix I. The calculations and the following assumptions and were used in determining the design requirements.

Assumptions

- The fieldwork portion of the project is of limited duration (4–6 weeks).
- The site is located remotely from the main ORNL site with access control easily accomplished.

4.2.8.2 Design requirements

- Maintaining distance from the equipment during operation is the primary means of radiation protection.
- Equipment is to be remotely operated with no human approach required for the purpose of operating the equipment.
- Zone boundaries should be established around the equipment, properly posted, and the area monitored to eliminate personnel intrusion into the equipment operating area, in accordance with ORNL procedure RPP-330.
- The main control trailer should be located in a low background (<0.5–1 mR/h) area.
- Moving the hoses and sluice equipment between the tanks will be done on a contact basis.
- The maintenance of the system will be on a contact basis.
- Water flush points in the piping system will be included to flush out the lines and pumps to reduce the doses to personnel when moving equipment between tanks and during maintenance.
- Doses to individuals should be kept below 2 rem/year in accordance with DOE-N-441.1.

4.3 PERMITS AND REGULATORY REQUIREMENTS

4.3.1 CERCLA

CERCLA was enacted to respond to environmental contamination, caused by past and present activities, that may pose a threat to human health and the environment. Section 104 of CERCLA describes two basic categories of environmental cleanup responses—removal actions and remedial actions. Removals are relatively short-term actions, as compared to the long-term remedial actions. Removals are designed to reduce a threat posed by an actual or potential release of a hazardous substance, and generally are undertaken during the course of remedial action planning or implementation. The sluicing and waste transfer project proposed in this Preliminary Engineering Design Report constitutes a removal action under CERCLA. Remedial action planning for WAG 5, of which the OHF Facility is a part, is proceeding simultaneously. Any residual contamination remaining after this project is completed (e.g., residual tank contents, contaminated tanks and appurtenances) will be addressed through the WAG 5 remedial action.

As noted in the *Engineering Evaluation/Cost Analysis for the Old Hydrofracture Facility Tanks at the Oak Ridge National Laboratory, Oak Ridge, Tennessee* (DOE 1996), the rationale for the OHF tanks removal action is to mitigate the following: (1) the threat of actual or potential exposure to nearby human populations, animals, or the food chain from hazardous substances, and (2) the threat of release of hazardous substances from the tanks.

In accordance with Sect. 300.415(I) of the National Contingency Plan, CERCLA removal actions must meet applicable or relevant and appropriate requirements (ARARs) of other public health and environmental laws, to the extent practicable, considering the urgency of the situation and the scope of the removal action. ARARs for the OHF sluicing project are identified in Appendix A of the *Engineering Evaluation/Cost Analysis for the Old Hydrofracture Facility Tanks at the Oak Ridge National Laboratory, Oak Ridge, Tennessee* (DOE 1996).

4.3.2 RCRA

RCRA regulates the generation, transportation, treatment, storage, and disposal of hazardous wastes. The state of Tennessee has been authorized by the EPA to administer specific sections of RCRA in lieu of the federal program and has published implementing regulations in the Tennessee Code Annotated.

RCRA and Tennessee hazardous waste rules require waste generators to characterize their waste and determine whether it is hazardous and thereby subject to regulation. A waste is hazardous if it is listed as a hazardous waste under 40 CFR Part 261 or if it meets one of the four specified waste characteristics: ignitability, corrosivity, toxicity, or reactivity.

The point at which the characterization of the OHF tank contents is most important for this sluicing operation is at the point where the wastes have been sluiced into tank T-9 and are ready for transfer to the MVST. The contents may be transferred to the MVST only if they meet the acceptance criteria for the ORNL LLLW system, which includes the MVST. The acceptance criteria for the LLLW system include restrictions designed to ensure the system meets applicable RCRA and Tennessee requirements and are published in:

- WMRAD-AD-108, "Procedure for Discharging Waste to the Oak Ridge National Laboratory Liquid Low-Level Waste System"

- ES/WM10, "Waste Acceptance Criteria for the Oak Ridge Reservation."

It will also be necessary to characterize solid and liquid waste generated during the sluicing project (e.g., decontamination water, discarded piping, personal protective equipment) to determine whether it is hazardous and how to properly dispose it. Any additional waste disposal situations arising during this removal action (e.g., spill cleanup) will be evaluated to determine the applicability of RCRA and Tennessee requirements.

As noted in Sect. 3.2, sampling and analysis of the contents of the OHF tanks has recently been conducted. Additional sampling and analysis will be performed after sluicing each tank, before transferring waste to the MVST. Based on the results of the 1988 sampling campaign and partial results from the 1995/1996 sampling campaign, it appears that the waste in the tanks may be classified as hazardous waste on the basis of the toxicity and corrosivity characteristics.

4.3.3 National Environmental Policy Act (NEPA)

NEPA sets out two basic and related objectives: preventing environmental damage and ensuring that federal agency decisionmakers consider environmental factors when planning and implementing projects. During the planning stages of a project, federal agencies must decide whether NEPA, the implementing Council on Environmental Quality regulations and relevant agency procedures require the preparation of an environmental assessment or an environmental impact statement, or whether a categorical exclusion is applicable. Categorical exclusions apply to projects that individually or cumulatively do not have significant effects on the environment.

A DOE policy statement on NEPA was issued by the Secretary of Energy on June 13, 1994. The purpose of the policy was to streamline the NEPA process, minimize the cost and time for document preparation and review, emphasize teamwork, and make the NEPA process more useful to decision makers and the public. The policy stated that in the case of CERCLA actions (such as this removal action), DOE would generally rely on the CERCLA process to incorporate NEPA values and would not require separate NEPA documentation. Exceptions to this provision are noted in the policy statement.

In the case of the OHF tanks sluicing project, the EE/CA report (DOE 1996), prepared as CERCLA documentation of the selected removal option, also satisfies NEPA documentation requirements. The public will be provided a 30-day period in which to comment. No further NEPA documentation will be required.

4.4 SAFETY ANALYSIS REQUIREMENTS

The OHF Facility is currently classified as a nuclear category 3 facility and a non-nuclear industrial facility. The classification was performed in the hazard screening report *Phase I – Safety Analysis Report Update Program Hazard Screening, Old Hydrofracture Facility, Facility 7852*; HS/7852/F/1/R1; approved October 1995 (Energy Systems 1995b). Since the storage tanks were classified as nuclear category 3, a Basis for Interim Operation (BIO) was prepared and submitted to DOE as part of the DOE Order 5480.22 and 5480.23 implementation process. The *Basis for*

Interim Operation Facility 7852, Old Hydrofracture Tanks, ORNL/BIO/7852/CTD/ER/R0, was approved by ORNL September 29, 1995 (Energy Systems 1995a). Comments have been received from DOE and the comments are being resolved.

The hazard screening and BIO address the current status of the tanks, which does not include the sludge and supernatant removal actions being proposed in this engineering report. The removal actions will constitute a modification to the facility hardware and operations and will need to be evaluated to determine if it is an unreviewed safety question as described in DOE Order 5480.21. Preliminary review of the DOE Order 5480.21 review criteria indicates that the removal actions will be an unreviewed safety question, which will require DOE approval of the safety analysis for the change. A formal evaluation of the removal actions as an unreviewed safety question determination can be made when the design and operational aspects are available for the review.

The safety analysis for the removal actions will be completed during the design, installation, and testing of the modifications. The safety analysis for the modification can be documented in one of several document types, such as a project safety analysis report, an activity specific safety analysis, or BIO revision for submittal to DOE. Since the removal actions will probably be nuclear category 3, technical safety requirement (TSR) levels of control as discussed in DOE Order 5480.22 will be developed from the safety analysis.

In addition to the nuclear categorization of the facility, DOE standard DOE-EM-STD-5502-94 also requires a non-nuclear classification for the facility for the non-nuclear hazards of the facility. Preliminary evaluations have indicated that this non-nuclear classification will be "low." The classification is driven by the toxic effects of the uranium in the tank sludges. Energy Systems Program Description *Safety Documentation*, FS-103PD, requires safety analysis for a low hazard classification. These requirements will be met with the same analysis, reports, and approvals as those required for the nuclear classification by including the non-nuclear accident consequences.

The preliminary evaluation of the project has not identified any safety class items or safety significant items. When the design progresses, the potential release scenarios will be re-examined to determine if a change has occurred. Although no safety class or safety significant items have been identified, several defense-in-depth items have been identified. The defense-in-depth items have no pre-specified design requirements. These items need to be designed using good engineering practices to ensure their proper operation for preventing or reducing releases. All components, which prevent or reduce releases, are considered defense-in-depth; however, the most significant items are (1) the pressure boundaries of components containing LLLW, (2) any leak detection and mitigation of components containing LLLW, (3) components to prevent a tank overflow, and (4) ventilation components that prevent the aerosols being generated by the spray nozzle from being released. The design of the items needs to be such that their function is reliable.

4.5 WASTE MANAGEMENT

4.5.1 Decontamination

Equipment used during the sluicing operation will be decontaminated to reduce health hazards and prevent the spread of contaminants off-site.

The method of decontamination will depend specifically on how the item is used in the sluicing operation and the size of the equipment. For example, items placed inside a tank such as a camera and lighting equipment will be decontaminated in a manner similar to that used for sampling equipment. Pumps and piping equipment will be flushed with potable water according to an approved method. Large equipment will be decontaminated according to procedures that specifically address large equipment.

If any piece of equipment cannot be decontaminated sufficiently, that equipment will be stored on-site in the waste accumulation area specified in the Waste Management Plan. Disposal of contaminated equipment, decontamination fluids, personal protective equipment (PPE), and general wastes will be addressed in the Waste Management Plan.

4.5.2 Waste Classification and Volume Estimates

In addition to the contents of the OHF tanks, this sluicing project will generate liquid and solid "remediation-derived" waste. Liquid remediation-derived wastes will consist primarily of the fluids used to decontaminate piping and equipment. Solid waste will include noncontaminated waste (e.g., paper, food, trash); PPE; plastic sheeting; discarded filters; coupons cut from tanks for installation of new risers; and construction debris. Equipment and piping that cannot be successfully decontaminated will either be left in place until final remedial action is taken at the site or will be discarded as waste. Since there is potential to reuse piping for subsequent actions at the site, the piping is assumed to be left in place and is not included in the waste estimates presented in the following section. Any contaminated soil displaced during the construction phase of the project will remain onsite and will be covered with a minimum of 12 in. of clean soil.

The liquid waste generated by decontamination activities will consist primarily of water and small amounts of decontamination agents. Liquid waste will fall into one of two categories depending on the level of radioactive contamination: low-level waste or process waste. Contamination levels that distinguish liquid low-level waste from liquid process waste, and identifies prohibited contaminants, are provided in ES/WM-10, "Waste Acceptance Criteria for the Oak Ridge Reservation." It is assumed that all liquid waste generated will be categorized as low-level waste; however, collected waste will be sampled to evaluate the possibility that it is process waste and to ensure that prohibited contaminants are not present.

Several types of equipment will require decontamination, including equipment used inside the tanks and equipment that does not enter the tanks. Equipment such as samplers and video cameras that are used and become contaminated inside the tanks will be decontaminated as they are removed from the tanks. Liquids used for decontamination in that case will wash into the tanks and will be decontaminated on a pad constructed for that purpose, and the liquid will be collected for proper disposal. It is estimated that no more than 500 gal of liquid remediation-derived waste will be generated during the course of the sluicing project (excluding tank contents).

Acceptance criteria for solid low-level radioactive waste generated at ORNL are provided in ES/WM-10, "Waste Acceptance Criteria for the Oak Ridge Reservation," and WM-SWO-502, "Waste Acceptance Policy for Radioactive Solid Low-Level Waste Storage and Disposal at Oak Ridge National Laboratory." Those procedures identify several categories of solid waste, the following of which will be generated by this sluicing project:

- sanitary
- low-level waste
  - incinerable
  - compactable
  - noncompactable

Table 4.2 shows the expected categories of wastes with estimated volume and container requirements. All accumulated solid, as well as liquid, waste will be characterized before disposal.

Table 4.2. Solid waste categories and volume estimates

	Solid waste category	Volume estimate	Container requirements
1.	Sanitary waste total	16 ft^3	2 × 55-gal drums
2.	Low-level waste total	122 ft^3	2× B-25 boxes
	a. PPE (incinerable or compactable)	24 ft^3	
	b. Plastic sheeting (incinerable or compactable	47 ft^3	
	c. Filters - 10 (incinerable or compactable)	40 ft^3	
	d. Tank coupons - 5 (non-compactable)	1 ft^3	
	e. Construction debris (non-compactable)	10 ft^3	

4.5.3 Disposal Options

After it is collected and characterized, the liquid remediation-derived waste will be transported to the MVST. Other options for disposal of liquid remediation-derived waste have been identified if the preferred option is not viable. Liquid waste could be transported to one of four locations: (1) the Wastewater Treatment Plant (Building 3608), if it is categorized as process waste; (2) the Transported Waste Receiving Facility (TWRF), if it is categorized as low-level waste and the TWRF is operational (currently completed but not yet operational); (3) the waste tanker unloading facility adjacent to the South Tank Farm, if the TWRF is not operational and it is low-level waste collected in tanker trucks; or (4) the waste bottle unloading facility at the Bethel Valley Evaporator Facility (Building 2531), if the TWRF is not operational and it is low-level waste collected in bottles. As noted earlier, WM-WMCO-201 establishes the distinction between liquid low-level and liquid process waste and defines prohibited substances.

Solid waste generated at ORNL is typically sent to the Scientific Ecology Group, Inc., facility in Oak Ridge for sorting and either incineration, compaction, or smelting, depending on the waste material, if it meets DOT requirements for "low-specific activity," defined in 49 CFR. Solid waste that does not meet "low-specific activity" requirements is generally put into storage at ORNL, either in the Interim Waste Management Facility or in Solid Waste Storage Area 6.

The Waste Management Plan developed for this project will describe in detail the requirements for segregating, accumulating, characterizing, packing, labeling, and transporting remediation-derived waste.

4.6 QUALITY ASSURANCE

Quality assurance for the project will be achieved through strict adherence to the quality assurance requirements as specified in the Lockheed Martin Energy Systems Quality Program Description (QPD) (Y/QD-15, REV. 2) and the *Environmental Restoration Quality Program Plan* (ER QPP) (ES/ER/TM-4/R4), which addresses the requirements of 10 CFR 830.120 and DOE Order 5700.6C. The QPD describes the overall Energy Systems quality program and incorporates the quality requirement commitments made by Energy Systems in response to the Price-Anderson Amendments Act. The ER QPP specifically describes the quality program adopted by the Energy Systems Environmental Restoration Program.

Design engineering requirements are also specified in DOE Order 6430.1A. Due to cost and schedule constraints, an alternative design approach to DOE Order 6430.1A has been requested. The following practices will ensure that a safe and cost-effective design is achieved.

1. The system will be a temporary installation, designed for a one-time removal operation consisting of short-term, intermittent operating cycles.

2. Applicable portions of nationally recognized codes, standards, and practices will be established as the basis of equipment and system design in lieu of DOE Order 6430.1A for new system components that contain, control, or form pressure boundaries for the hazardous materials.

3. Compliance with earthquake/seismic, tornado/missile projectile, and natural phenomena criteria will be waived.

5. PROJECT COST AND SCHEDULE

5.1 PROJECT COST

The cost for the OHF tanks content removal project is estimated to be ~$11.5 million.

5.2 PROJECT SCHEDULE

The sluicing operation is scheduled to begin in 1997, provided adequate funding is available.

6. REFERENCES

DOE-STD-1027-92, "Hazard Categorization and Accident Analysis Techniques for Compliance with DOE Order 5480.23"

DOE-STD-3009-94, "Preparation Guide for U.S. DOE Nonreactor Nuclear Facility Safety Analysis Report"

DOE-HDBK-3010-94 "Airborne Release Fractions/Rates and Respirable Fractions for Nonreactor Nuclear Facilities"

DOE-STD-3011-94, "Guidance for Preparation of DOE 5480.22 (TSR) and DOE 5480.23 (SAR) Implementation Plans"

DOE-EM-STD-5502-94, "Hazard Baseline Documentation"

DOE (U.S. Department of Energy) 1995. *Remedial Investigation Report on Waste Area Grouping 5 at Oak Ridge National Laboratory, Oak Ridge, Tennessee.* DOE/OR/01-1326&D2/V1.

DOE (U.S. Department of Energy) 1996. *Engineering Evaluation/Cost Analysis for the Old Hydrofracture Facility Tanks at the Oak Ridge National Laboratory, Oak Ridge, Tennessee.* DOE/OR/02-1450&D1.

DeVore, J. R., K. E. Lott, and T. Herrick 1994. *Technology Study of Gunite Tank Sludge Mobilization at Oak Ridge National Laboratory, Oak Ridge, Tennessee.* ORNL/ER-286, December.

DeVore, J.R. 1995. *Selection of Sludge Mobilization Technology*, letter report, December 15.

Energy Systems (Martin Marietta Energy Systems, Inc.) 1994. *Surveillance and Maintenance Plan for the Inactive Liquid Low-Level Waste Tanks at Oak Ridge National Laboratory.* ORNL/ER-275.

Energy Systems (Lockheed Martin Energy Systems, Inc.) 1995a. *Basis for Interim Operation Facility 7852, Old Hydrofracture Tanks.* ORNL/BIO/7852/CTD/ER/R0.

Energy Systems (Lockheed Martin Energy Systems, Inc.) 1995b. *Phase I – Safety Analysis Report Update Program Hazard Screening, Old Hydrofracture Facility 7852.* HS/7852/F/1/R1.

Energy Systems (Lockheed Martin Energy Systems, Inc.) 1996. *Site Characterization Summary Report for the Old Hydrofracture Facility, Waste Area Grouping 5, at Oak Ridge National Laboratory, Oak Ridge, Tennessee.* ORNL/ER-360.

Huang S. F., R. K. Owenby, W. F. Ohnesorge et al. 1984. *Preliminary Radiological Characterization of the Old Hydrofracture Facility (OHF) at Oak Ridge National Laboratory.* ORNL/CF-84/202.

Lockwood Greene Technologies 1995. *Design Analysis and Calculation Report, DAC-M-030, Evaluation of Equipment and Process Operations for Modified Sluicing Method for Oak Ridge National Laboraotry Gunite and Associated Tanks Operable Unit Treatability Study Baseline Report* (draft, never published), February.

NIOSH (National Institute for Occupational Safety and Health) 1990. *Pocket Guide to Chemical Hazards*. Publication 90-117. U.S. Department of Health and Human Services.

Reed, W. R. 1995. *Investigation of Commercial Applications for Old Hydrofracture Tank Remediation*, letter report, October 5.

Appendix A

SYSTEM REQUIREMENTS DOCUMENT FOR THE WAG 5 OLD HYDROFRACTURE FACILITY INACTIVE TANKS PROJECT

SYSTEM REQUIREMENTS DOCUMENT

FOR THE

WAG 5 OHF INACTIVE TANKS PROJECT

X-OE-777

March 19, 1996

Prepared by the
Systems Engineering Division of
Energy Systems Central Engineering
Oak Ridge, Tennessee 37831-6337
managed by
LOCKHEED MARTIN ENERGY SYSTEMS, INC.
for the
U.S. DEPARTMENT OF ENERGY
under contract DE-AC05-84OR21400

SYSTEM REQUIREMENTS DOCUMENT

FOR THE

WAG 5 OHF INACTIVE TANKS

PROJECT

X-OE-777

March 19, 1996

Approved by:

C. Mims DOE Environmental Restoration Tank Program Manager	Date
C.A. Bednarz Environmental Restoration OHF Tanks Project Manager	Date
M.L. Whitehead Environmental Restoration OHF Tanks Facility Manager	Date
W.T. Thompson Principal Engineer	Date
C.B. Scott Liquid and Gaseous Waste Management Operations	Date

CONTENTS

ACRONYMS, ABBREVIATIONS, AND INITIALISMS iv

1. MISSION STATEMENT 1

2. INTRODUCTION 1

3. PROJECT DESCRIPTION 1
   3.1 BACKGROUND 1
   3.2 SYSTEM DESCRIPTION 2
   3.3 FUNCTIONAL FLOW BLOCK DIAGRAM 7

4. REQUIREMENTS AND SPECIAL ISSUES 9
   4.1 GENERAL REQUIREMENTS 9
   4.2 SLUDGE MOBILIZATION REQUIREMENTS 10
   4.3 PUMP OUT SYSTEM REQUIREMENTS 10
   4.4 TRANSPORT SYSTEM REQUIREMENTS 10
   4.5 AIR CLEAN UP SYSTEM REQUIREMENTS 11
   4.6 MONITORING AND CONTROL SYSTEM REQUIREMENTS 12
   4.7 CONSTRAINTS/SPECIAL ISSUES 12

5. UNCERTAINTIES AND ANALYSES 13

FIGURES

1 OHF TANK LOCATION 3
2 OHF TANK SCHEMATIC CONFIGURATIONS 4
3 OHF TANK DATA SUMMARY 5
4 OHF TANK CONCEPTUAL PROCESS FLOW 6
5 FUNCTIONAL FLOW BLOCK DIAGRAM 8

ACRONYMS, ABBREVIATIONS, AND INITIALISMS

CERCLA.....Comprehensive Env. Response, Compensation, and Liability Act
FFA.....Federal Facility Agreement
FFBD.....Functional Flow Block Diagram
HEPA.....High Efficiency Particulate Air
l.....Liter
LLLW.....Liquid Low-Level Waste
mg.....Milligram
MVST.....Melton Valley Storage Tanks
OHF.....Old Hydrofacture Facility
ORNL.....Oak Ridge National Laboratory
SLLW.....Solid Low-Level Waste
SRD.....System Requirements Document
TDEC.....Tennessee Department of Environment and Conservation
TRU.....Transuranic
WAG.....Waste Area Group

1. MISSION STATEMENT

The mission of the Waste Area Group (WAG) 5 Old Hydrofracture Facility (OHF) Inactive Tanks project is to safely transfer the contents of the five OHF inactive liquid low-level waste (LLLW) tanks to the Oak Ridge National Laboratory (ORNL) active LLLW system.

2. INTRODUCTION

The Superfund Amendments and Reauthorization Act of the Comprehensive Environmental Response, Compensation, and Liability Act (CERCLA) requires a Federal Facility Agreement (FFA) for federal facilities placed on the National Priorities List. The Oak Ridge Reservation was placed on that list on December 21, 1989, and the agreement was signed in November 1991 by the U.S. Department of Energy Oak Ridge Operations Office, the EPA-Region IV, and the Tennessee Department of Environment and Conservation (TDEC). The effective date of the FFA is January 1, 1992. One objective of the FFA is to ensure that LLLW tanks that are removed from service are evaluated and remediated through the CERCLA process. Five inactive LLLW tanks, designated T-1, T-2, T-3, T-4, and T-9, located at the OHF in the Melton Valley area of ORNL have been evaluated and are now entering the remediation phase. As a precursor to final remediation, this project will remove the current liquid and sludge contents of each of the five tanks. This System Requirements Document (SRD) provides the minimum set of top level requirements which must be satisfied in order to successfully complete the project.

3. PROJECT DESCRIPTION

3.1 BACKGROUND

The OHF, in operation between 1964 and 1980, blended liquid waste from the ORNL gunite tanks with grout for underground hydrofracture injection. The liquid waste was transferred to the OHF and stored in a series of five underground carbon steel tanks prior to grout formulation and injection. Following cessation of injection activities in 1980, the tanks, still containing waste materials, were abandoned in place.

The tanks, with capacities ranging from 13,000 to 25,000 gallons, were installed in two open pits, backfilled with gravel, with common concrete pads and 4 ft high concrete walls separating the tanks. The tanks may have been partially coated with tar. Tanks T-3 and T-4 are rubber lined. Although currently non-functional, each tank was cathodically protected by an impressed current system. Each tank has an associated vitrified clay pipe dry well, with T-3 and T-4 sharing a well. The dry wells are monitored monthly for contamination levels. Additionally, each tank is ventilated to the atmosphere through high efficiency particulate air (HEPA) filters. Figure 1 shows the physical locations of the tanks, while Figure 2 presents a schematic configuration of the tanks. Figure 3 contains a summary of tank data.

The purpose of this project is to perform the necessary tasks to remove the existing liquid and sludge contents of each of these underground tanks, and transfer the contents to the active ORNL LLLW system for storage. The goal is to leave each tank in a final state in which 5% or less of the current contens (by volume) remain. This step is in preparation for final remediation activities.

3.2 SYSTEM DESCRIPTION

In order to accomplish the mission of this project, preliminary engineering has been performed, and a design concept/process flow, shown in Figure 4, has been developed. Detailed flowsheets for the five systems which comprise the design concept will be developed during the detailed design process. Each system is briefly described below.

Sludge Mobilization System - This system consists of the equipment, processes, and personnel necessary to place the existing tank sludges in a configuration such that they can be transferred to the active LLLW system. Key equipment for sludge mobilization will include commercially available sluicing components.

Pump Out System - This system consists of the equipment, processes, and personnel necessary to extract liquids and sludges from each OHF tank. Essentially, this system will consist of pumps/connecting piping to elevate the contents from each tank.

Transport System - This system consists of the equipment, processes, and personnel necessary to provide the motive force and convey the extracted liquids and sludges from each OHF tank to the

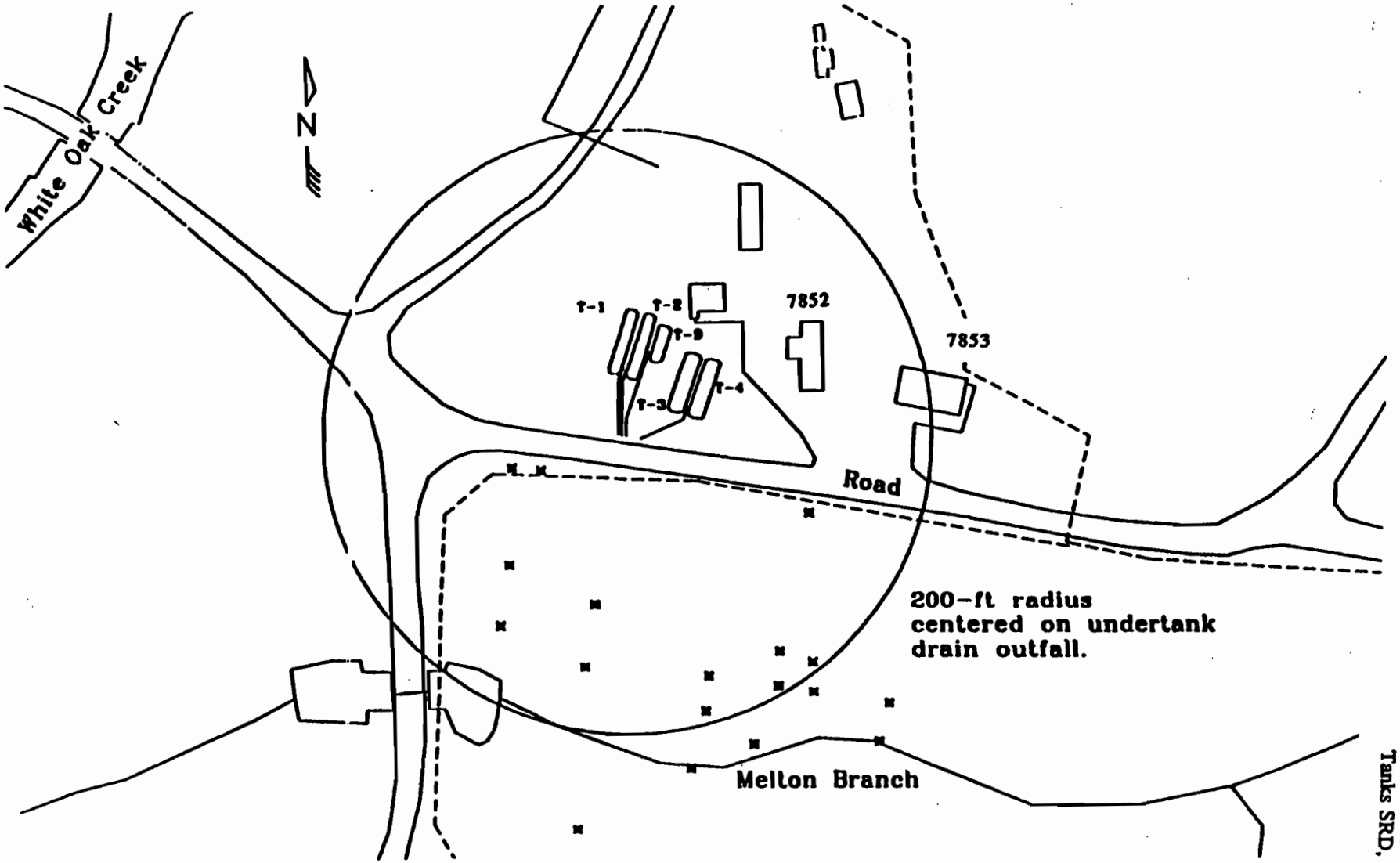

Figure 1: OHF Tank Locations

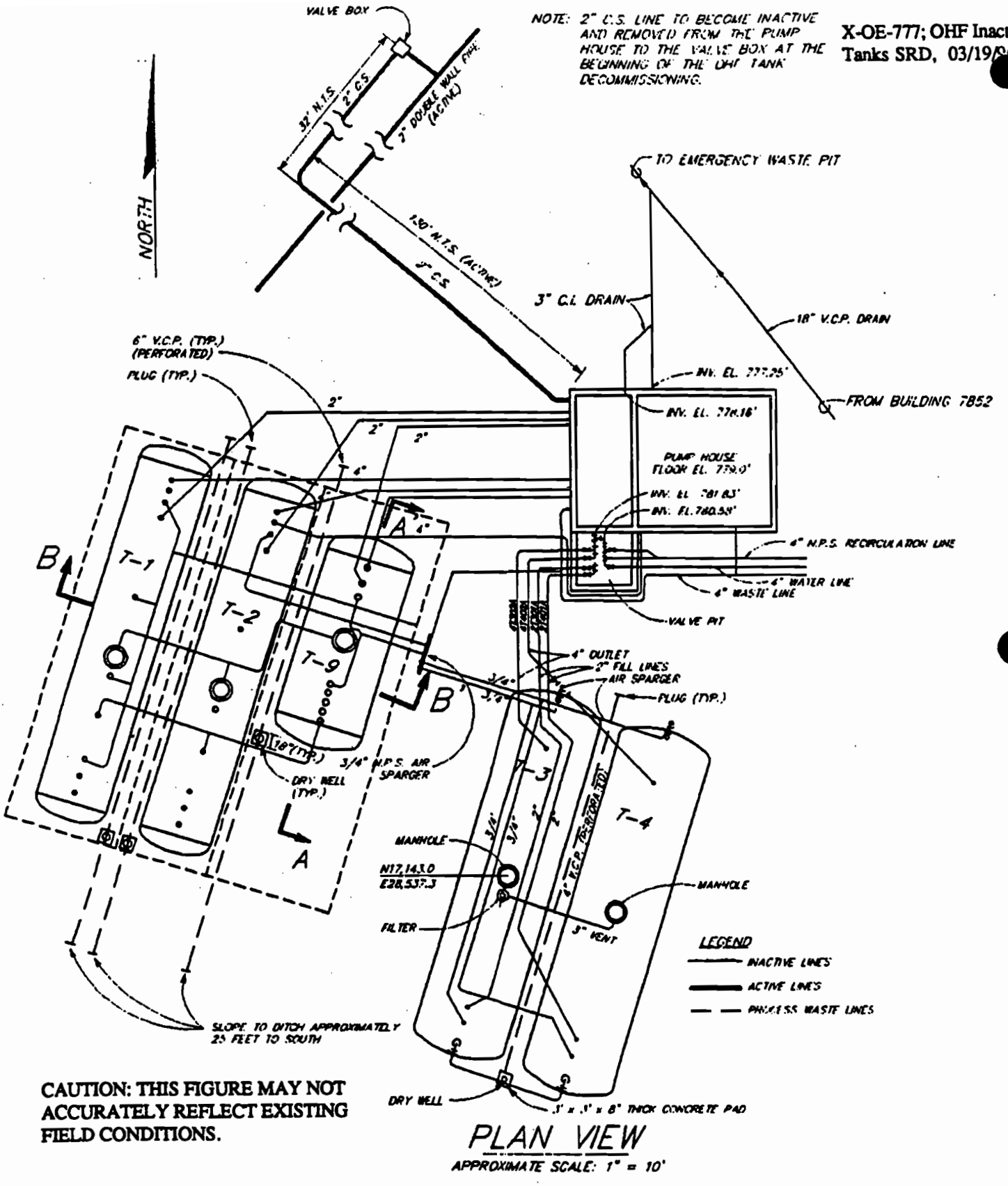

CAUTION: THIS FIGURE MAY NOT ACCURATELY REFLECT EXISTING FIELD CONDITIONS.

Figure 2: OHF Tank Schematic Configurations

Tank	Material of Construction	Nominal Capacity (gal)	Current Inventory		Rad Summary (Ci)			
			Liquid (gal)	Sludge (gal)	Liquid		Sludge	
					α	β-γ	α	β-γ
T-1	Carbon Steel	15,000	7,700	800	0	64	80	7,235
T-2	Carbon Steel	15,000	9,500	1,200	0	136	46	3,710
T-3	Rubber-lined Carbon Steel	25,000	1,100	2,000	0	31	80	10,010
T-4	Rubber-lined Carbon Steel	25,000	13,300	1,400	0	423	62	6,043
T-9	Carbon Steel	13,000	4,600	500	0	162	11	1,202

Source: "Pre-feasibility Study: OHF Tank Inventory Removal", May 3, 1995, Environmental Restoration Program

Figure 3: OHF Tank Data Summary

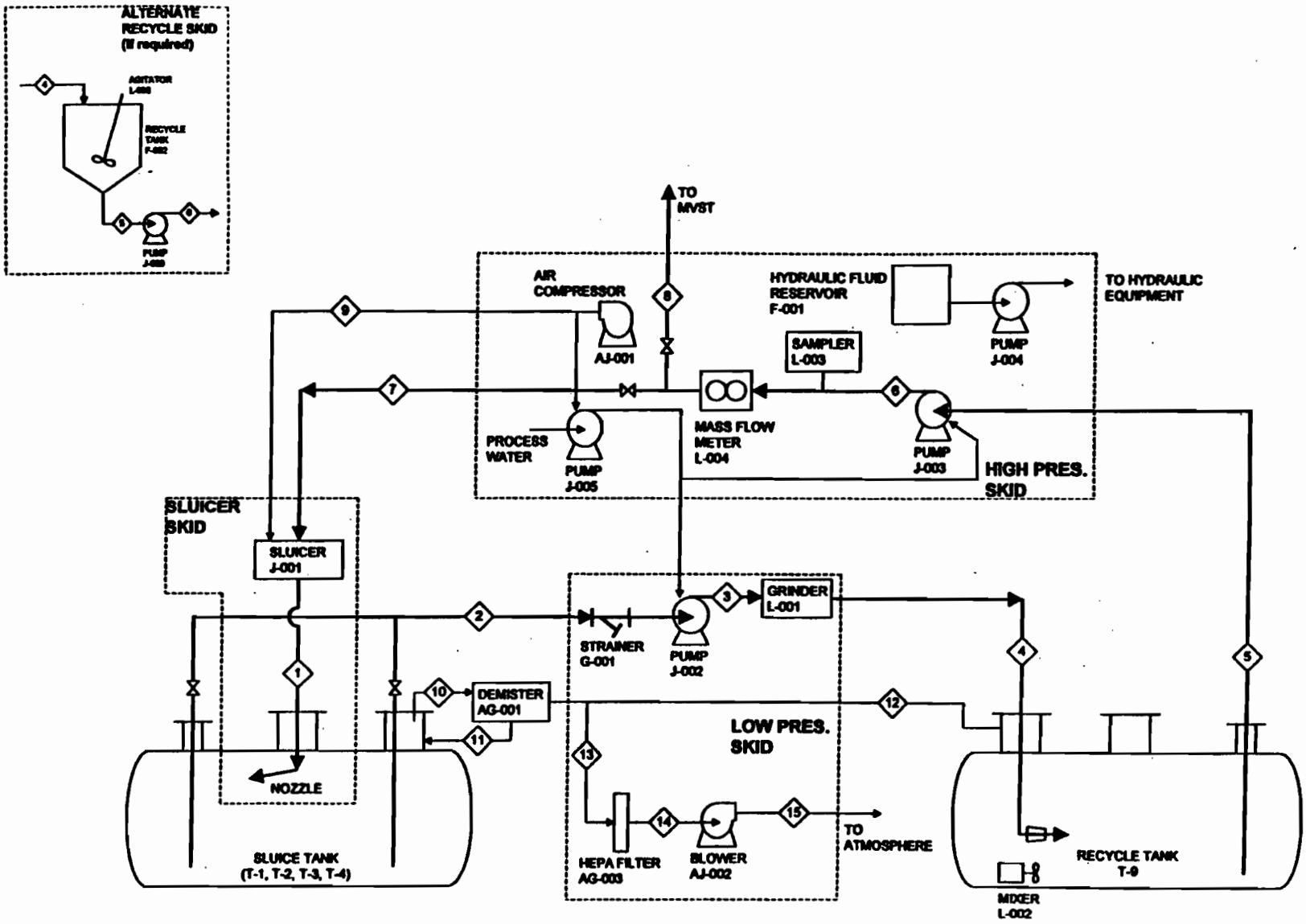

Figure 4: OHF Conceptual Process Flow

active LLLW system. A pump and transfer piping (new and existing) to the existing LLLW system are the primary equipment items for the transport system.

Air Clean-Up System - This system consists of the equipment, processes, and personnel necesssary to ensure that airborne contaminants from the tanks or generated during processing of the tank contents are not released into the environment. A temporary blower and HEPA filters are currently proposed to perform air clean up functions.

Monitoring and Control System - This system consists of the equipment and personnel necessary to monitor selected process parameters and control system functions. This system will be made up of field instrumentation, video cameras/recorders, data loggers, and command/control equipment located in proximity to the tanks.

3.3 FUNCTIONAL FLOW BLOCK DIAGRAM

A functional flow block diagram (FFBD) was prepared for this project in order to facilitate the definition of functional and performance requirements, and to identify system boundaries and interfaces. The FFBD is presented in Figure 5.

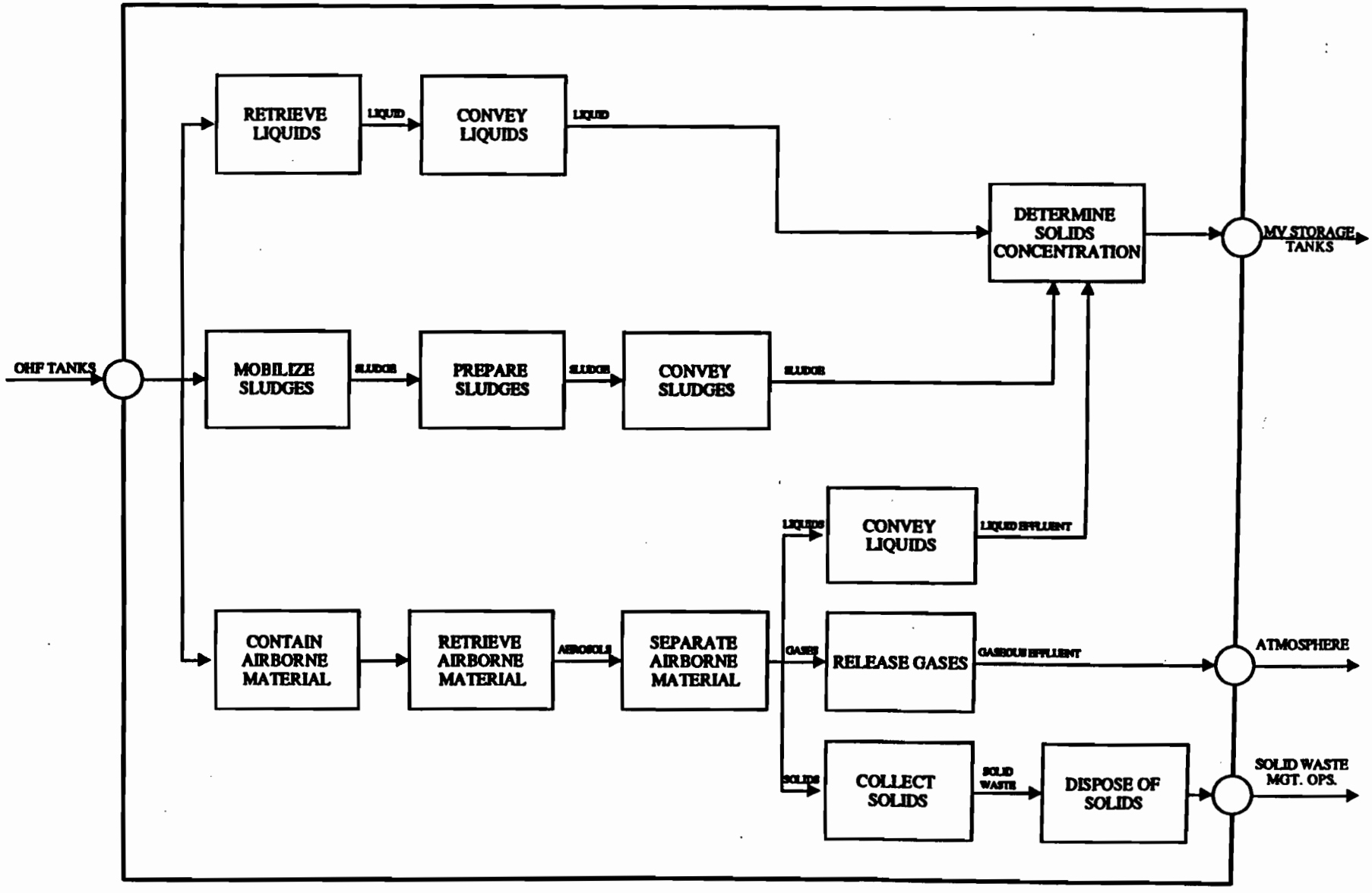

Figure 5: Functional Flow Block Diagram, OHF Contents Removal

4. REQUIREMENTS AND SPECIAL ISSUES

4.1 GENERAL REQUIREMENTS

4.1.1 Materials of Construction. All hardware components, including pumps, piping, and valves expected to be in direct contact with the tank contents during normal operation shall be fabricated from materials of proven compatability with similar process/waste streams for expected temporary service. Physical and chemical characteristics of the tank contents are contained in Table 5.2 of the Site Characterization Summary Report for the Old Hydrofracture Facility.

4.1.2 Schedule. A target date of December 31, 1997 has been established for completion of all material transfer activities from each OHF tank.

4.1.3 Design Life. Systems and equipment to be utilized for removal of materials from the OHF tanks shall be designed as temporary installations with service life limited to a one-time contents removal activity.

4.1.4 Design Standards. In lieu of DOE Order 6430.1A, applicable portions of nationally recognized codes, standards, and practices will be established as the basis of equipment and system design for new system components which contain, control, or form pressure boundaries for hazardous materials above DOE-STD-1027-92 Category 3 limits.

4.1.5 Natural Phenomena. Due to the temporary nature of the installation, compliance with earthquake/seismic, tornado/missile projectile, and flood design criteria is not required for this activity.

4.1.6 Radiological Design Guidelines. Systems and equipment to be utilized for removal of materials from the OHF tanks shall be designed in accordance with appropriate radiological protection criteria contained in ORNL Office of Radiation Protection procedure RPP-128, "Radiological Design Requirements for New Facilities and Modifications to Existing Facilities".

4.2 SLUDGE MOBILIZATION SYSTEM REQUIREMENTS

4.2.1 Sludge Mobilization. Stationary sludge wastes located within each OHF tank shall be mobilized to the extent possible using commercially available techniques/equipment.

4.2.2 Sludge Preparation. Mobilized sludges shall be adequately prepared with respect to particle size and solids concentration to preclude any appreciable solids deposition within existing conveyance equipment (i.e., piping, valves) during transport.

4.3 PUMP-OUT SYSTEM REQUIREMENTS

4.3.1 Liquids. The capability to extract existing supernatant liquids from each OHF tank shall be provided.

4.3.2 Sludges. The capability to extract sludges prepared in accordance with 4.2.2 from each OHF tank shall be provided.

4.4 TRANSPORT SYSTEM REQUIREMENTS

4.4.1 Motive Force. Sufficient motive force shall be provided such that liquids and properly prepared sludges can be transferred from each OHF tank to the destination tank at a flow rate sufficient to preclude appreciable solids deposition within transport system components.

4.4.2 Destination Tanks. Liquids and sludges extracted from each OHF tank shall be transported to the Melton Valley Storage Tanks (Building 7830).

4.4.3 Total Volume Limits. At completion of the project, the total volume of material (liquids and sludges), transported to the MVSTs from the OHF tanks shall not exceed 70,000 gallons.

4.4.4 Secondary Containment/Leak Detection. Portions of the new transport system which convey LLLW or sludges shall meet the containment/release detection requirements contained in Appendix F, Paragraph C of the Federal Facility Agreement for the Oak Ridge Reservation.

4.4.5 Waste Evaluation Criteria. Liquids and sludges to be transported to the active LLLW system for processing and/or storage shall meet the requirements of WM-WMCO-201, ORNL Liquid Waste Treatment System Waste Evaluation Criteria.

4.5 AIR CLEAN UP SYSTEM REQUIREMENTS

4.5.1 Confinement. Tank atmospheres shall be confined throughout removal activities in order to preclude release of untreated gases to the environment.

4.5.2 Exhaust Air Emission Standards. Exhaust air from the air clean up system shall not exceed the 40 CFR 61 Subpart H standards for radionuclide emissions.

4.5.3 Solid Waste Management. Radioactive solid low-level waste (SLLW) generated as a result of operation of the air clean up system (e.g., contaminated HEPAs) shall be handled, packaged, and disposed of in accordance with WM-SWO-502, Waste Acceptance Policy for Radioactive Solid Low- Level Waste Storage and Disposal at Oak Ridge National Laboratory.

4.5.4 Liquid Waste Management. LLLW generated as a result of operation of the air clean up system shall be transported to the active ORNL LLLW system in accordance with 4.4.2.

4.6 MONITORING AND CONTROL SYSTEM REQUIREMENTS

4.6.1 Volume Data. The capability to determine the volumes of liquids and sludges in each tank prior to and following contents removal activities shall be provided.

4.6.2 Process Data. Appropriate parameters necessary for process control shall be monitored and recorded locally throughout the duration of removal activities.

4.6.3 Solids Concentration Data. The capability to determine the concentration of solids for each stream prior to transfer to the active LLLW system shall be provided.

4.6.3 Compliance Data. Provisions shall be made for collection and monitoring of environmental protection data (air releases, leak detection, etc) determined to be necessary by the ORNL Environmental Compliance organization.

4.6.4 Visual Inspection. Provisions shall be made to allow remote visual inspection of each tank prior to, during, and following removal activities.

4.7 CONSTRAINTS/SPECIAL ISSUES

4.7.1 Radiological Hazard Category. The existing OHF tanks have been tentatively identified as a "Hazard Category III" nuclear facility in accordance with DOE-STD-1027-92 (refer to Parallax report OR-96-077).

4.7.2 Non-radiological Hazard Category. The existing OHF tanks have been tentatively identified as a "Low" hazard facility in accordance with ES/CSET-2.

4.7.23 Liquid Waste Classification. Supernatant waste material in each OHF tank is classified as Liquid Low-Level Waste.

4.7.4 Sludge Waste Classification. Sludge waste material in each OHF tank is classified as Transuranic (TRU) Waste.

5. UNCERTAINTIES AND SPECIAL ANALYSES

5.1 It is uncertain whether or not materials in the tank sludges pose a criticality concern. An assessment by System Safety/Criticality Safety is required in order to resolve this uncertainty.

5.2 It is uncertain how much of the existing contents can be removed from each OHF tank using commercially available techniques and equipment. Therefore, 95% removal has been established as a goal, not a requirement.

Appendix B

OAK RIDGE NATIONAL LABORATORY RADIOLOGICAL SURVEY DATA

ORNL Radiological Survey Data

SAAS Field Office

Survey Number: SAAS-95-0469 Date: 9/8/95 Time: 15:20

Surveyor Badge Number: 30557 ☒ Routine Survey RWP Number: SAAS-95-0038

Building: OHF Specific Location: ROUTINE SEMI-ANNUAL SURVEY

Description:

Background, smear and probe of areas as indicated on maps.

Instruments Used and Calibration Due Date:

2652-10I	9/20/95	2652-14P	2/25/96	2652-26S	10/25/95

General Description of Radiological Conditions:

Conditions range from High radation and High contamination areas to soil contamination below detectible levels.

Division or Group Needing the Survey: WM Person-hours spent on the survey: 10

# of Pages: 6 Completed By: W.H. Wolfe Reviewed by: Jo Ellen Francis Date: 11/27/95

ORNL Radiological Survey Data

Survey Number: SAAS-95-0469 | SAAS Field Office | Date: 9/8/95 | Time: 15:20

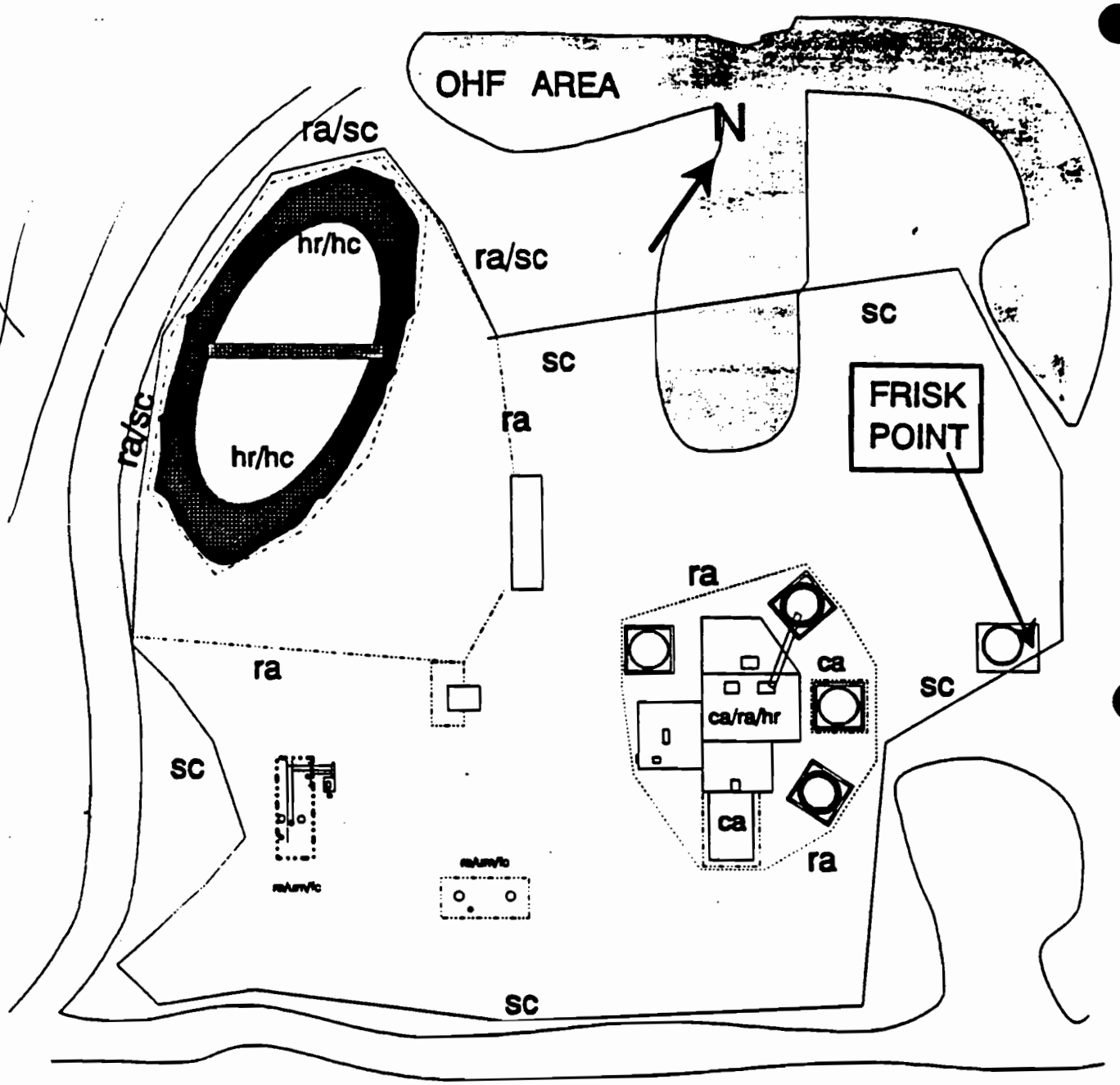

(#)	- Smear Location	Boundary Designations	
(#)—(#)	- Large Area Smear	RA - Radiation Area	BA - Radiological Buffer Area
#	- Contact Dose Rate	HR - High Radiation Area	CA - Contamination Area
#	- 30 cm Dose Rate	VR - Very High Radiation Area	HC - High Contamination Area
#	- General Area Dose Rate	AR - Airborne Radioactivity Area	FC - Fixed Contamination Area
SOP	- Step-off Pad	RM - Radioactive Materials Area	SC - Soil Contamination Area
AS	- Air Sample Location	UM - Underground Radioactive Materials Area	

Default units are in mR/hr and are for open window beta/gamma readings. Letter suffixes with the number indicate specific radiations: B - Beta (mRad/hr), G - Gamma (mR/hr), N - Neutron (mRem/hr). Boundary designations are looking from the designations into the zoned area.

ORNL Radiological Survey Data

Survey Number: SAAS-95-0469 | SAAS Field Office | Date: 9/8/95 | Time: 15:20

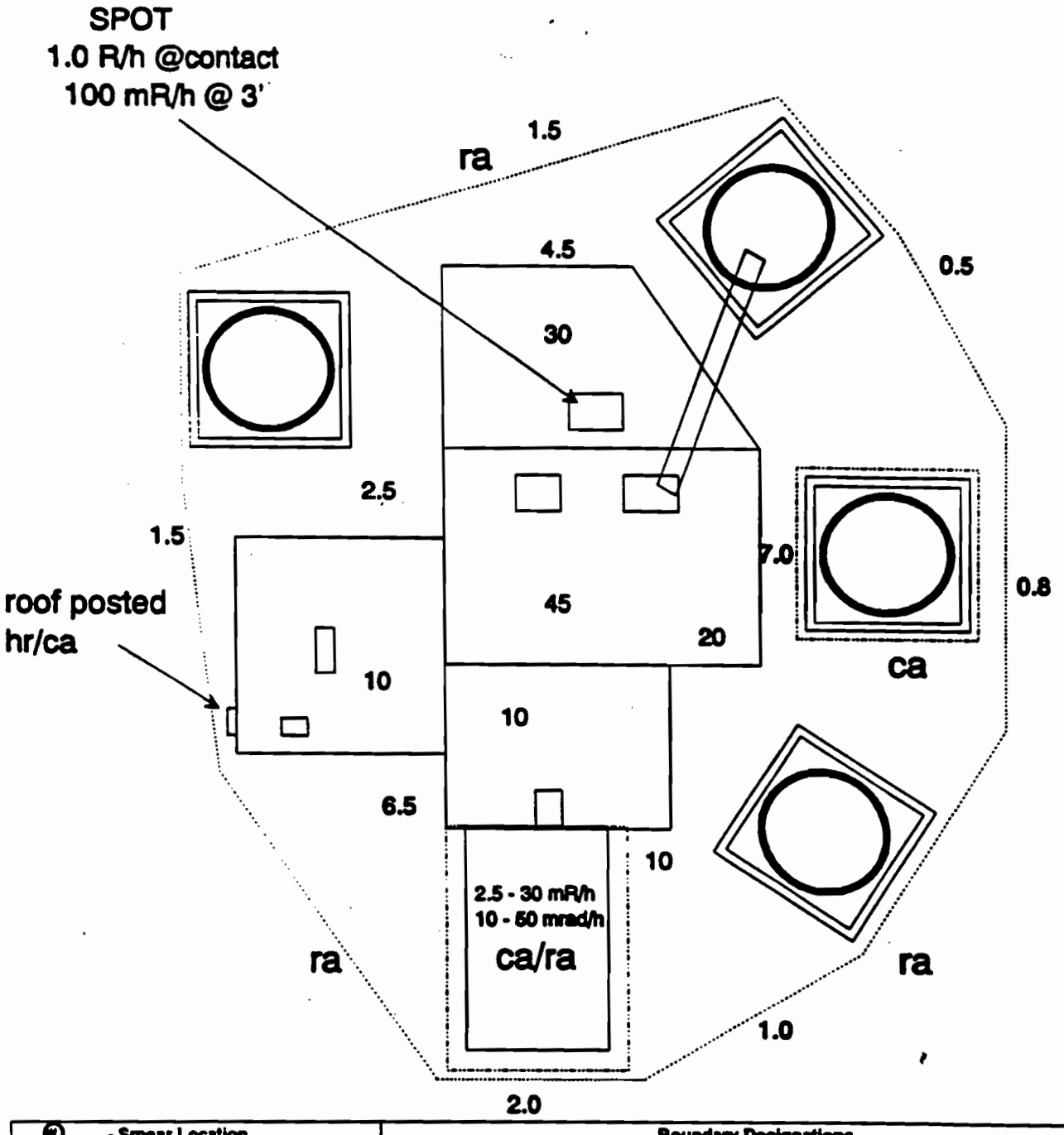

(#)	- Smear Location	Boundary Designations	
(#)—(#)	- Large Area Smear	RA - Radiation Area	BA - Radiological Buffer Area
#	- Contact Dose Rate	HR - High Radiation Area	CA - Contamination Area
#	- 30 cm Dose Rate	VR - Very High Radiation Area	HC - High Contamination Area
#	- General Area Dose Rate	AR - Airborne Radioactivity Area	FC - Fixed Contamination Area
SOP	- Step-off Pad	RM - Radioactive Materials Area	SC - Soil Contamination Area
AS	- Air Sample Location	UM - Underground Radioactive Materials Area	

Default units are in mR/hr and are for open window beta/gamma readings. Letter suffixes with the number indicate specific radiations: B - Beta (mRad/hr), G - Gamma (mR/hr), N - Neutron (mRem/hr). Boundary designations are looking from the designations into the zoned area.

ORNL Radiological Survey Data

Survey Number: SAAS-95-0469 | SAAS Field Office | Date: 9/8/95 | Time: 15:20

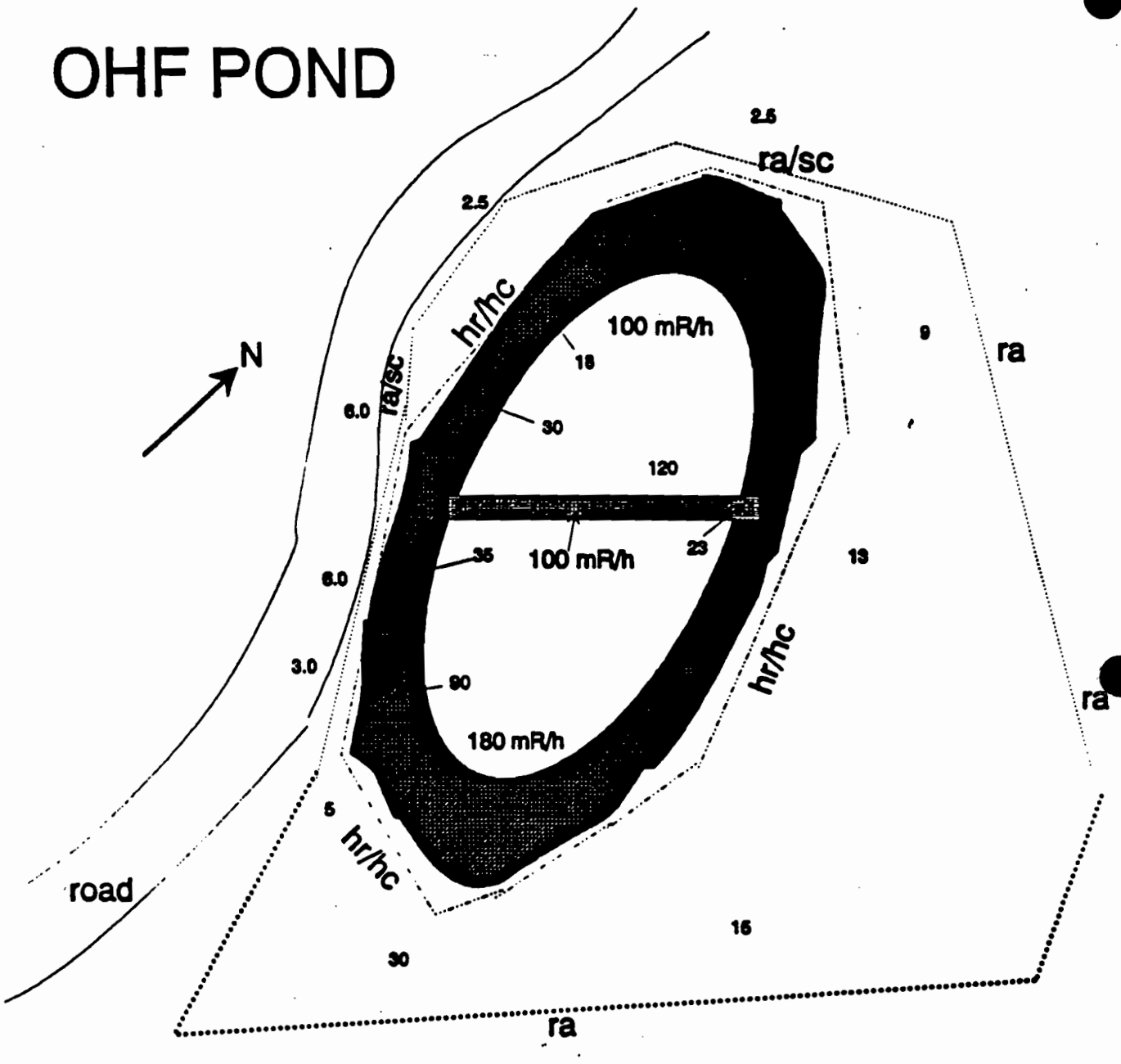

(#)	- Smear Location	Boundary Designations	
(#)—(#)	- Large Area Smear	RA - Radiation Area	BA - Radiological Buffer Area
#̲	- Contact Dose Rate	HR - High Radiation Area	CA - Contamination Area
#	- 30 cm Dose Rate	VR - Very High Radiation Area	HC - High Contamination Area
#	- General Area Dose Rate	AR - Airborne Radioactivity Area	FC - Fixed Contamination Area
SOP	- Step-off Pad	RM - Radioactive Materials Area	SC - Soil Contamination Area
AS	- Air Sample Location	UM - Underground Radioactive Materials Area	

Default units are in mR/hr and are for open window beta/gamma readings. Letter suffixes with the number indicate specific radiations: B - Beta (mRad/hr), G - Gamma (mR/hr), N - Neutron (mRem/hr). Boundary designations are looking from the designations into the zoned area.

ORNL Radiological Survey Data

Survey Number: SAAS-95-0469 | SAAS Field Office | Date: 9/8/95 | Time: 15:20

OHF Well Tops

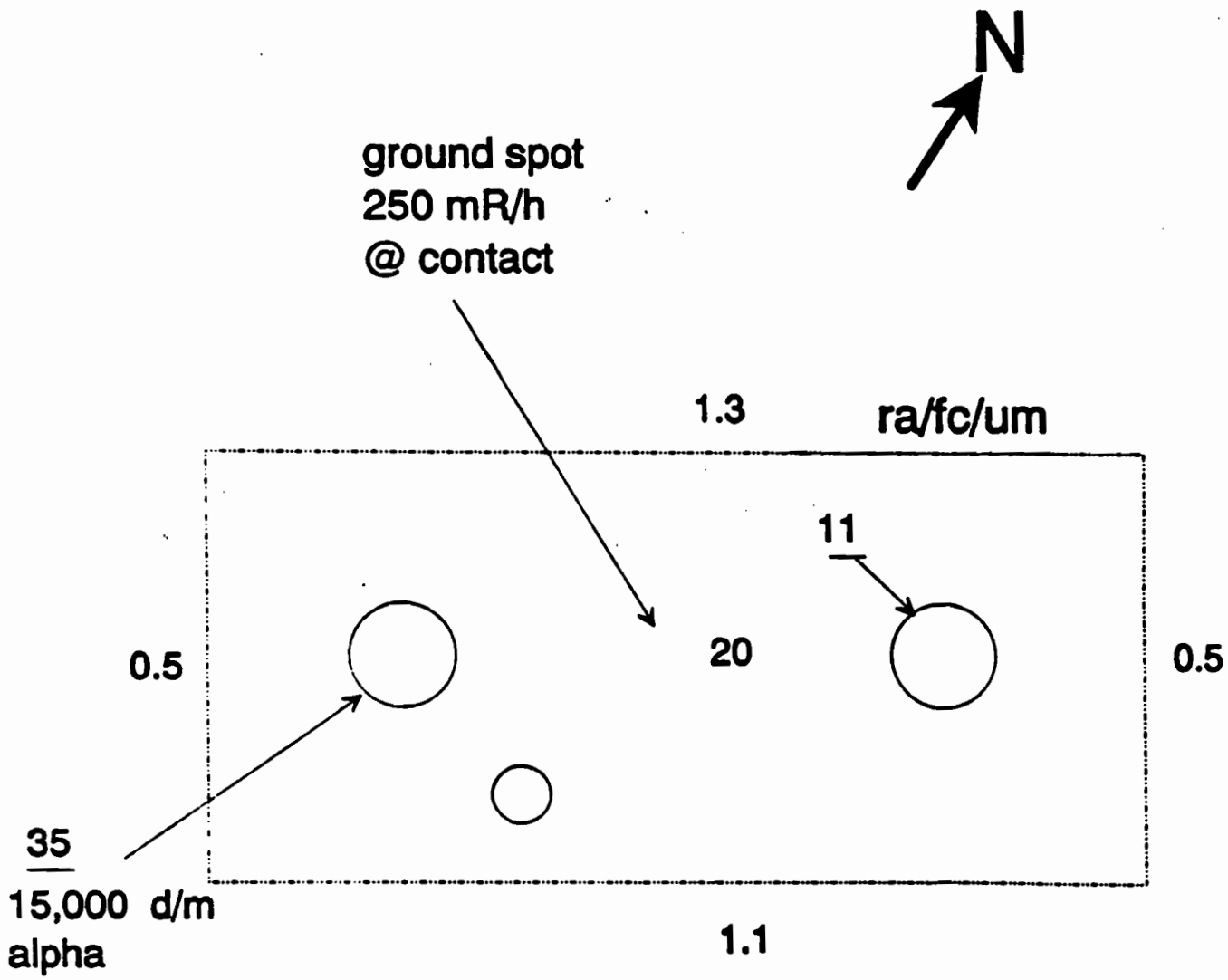

(#)	- Smear Location	Boundary Designations	
(#)—(#)	- Large Area Smear	RA - Radiation Area	BA - Radiological Buffer Area
#	- Contact Dose Rate	HR - High Radiation Area	CA - Contamination Area
#	- 30 cm Dose Rate	VR - Very High Radiation Area	HC - High Contamination Area
#	- General Area Dose Rate	AR - Airborne Radioactivity Area	FC - Fixed Contamination Area
SOP	- Step-off Pad	RM - Radioactive Materials Area	SC - Soil Contamination Area
AS	- Air Sample Location	UM - Underground Radioactive Materials Area	

Default units are in mR/hr and are for open window beta/gamma readings. Letter suffixes with the number indicate specific radiations: B - Beta (mRad/hr), G - Gamma (mR/hr), N - Neutron (mRem/hr). Boundary designations are looking from the designations into the zoned area.

ORNL Radiological Survey Data

Survey Number: SAAS-95-0469 | SAAS Field Office | Date: 9/8/95 | Time: 15:20

OHF West Tank Access

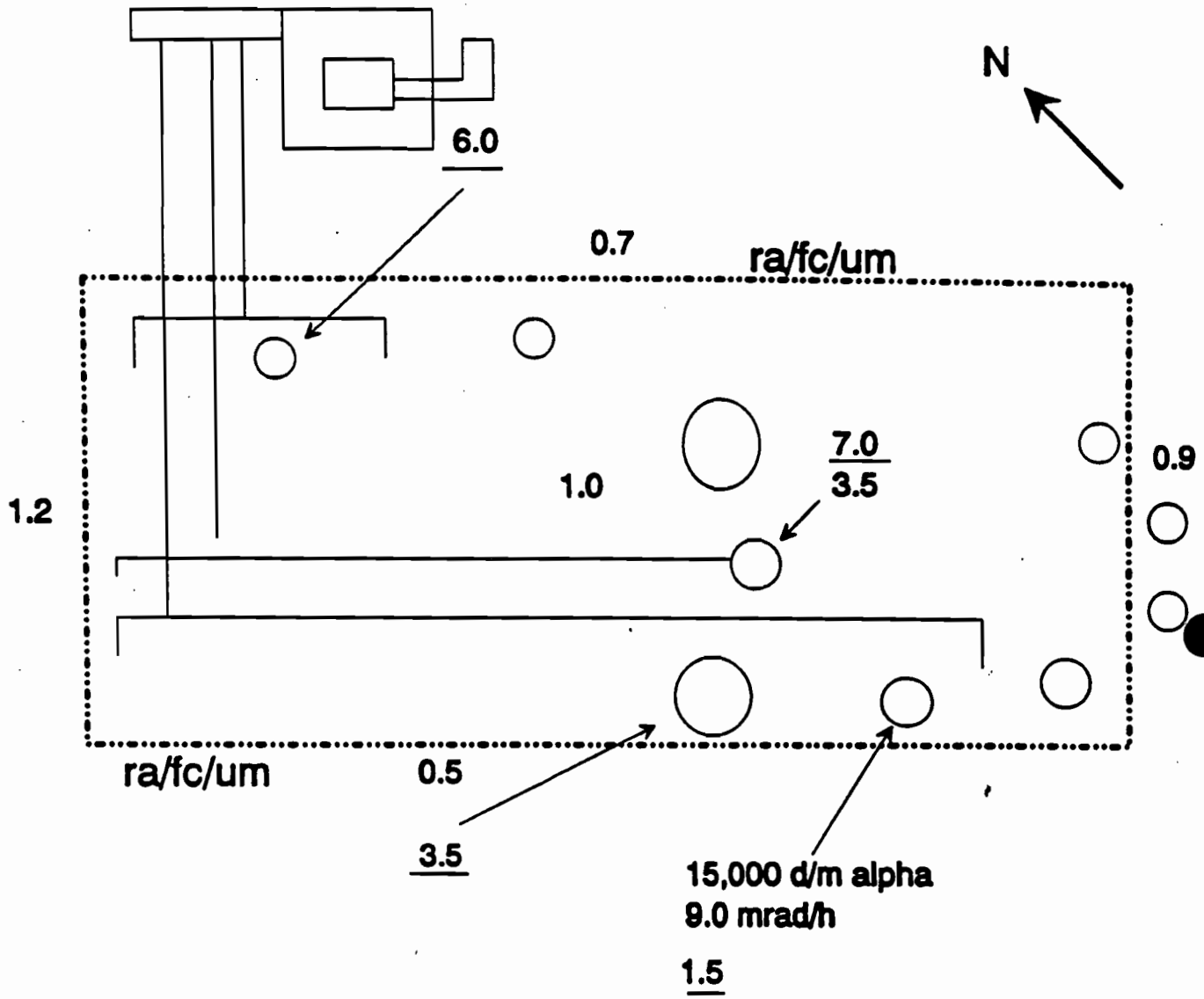

#	- Smear Location	Boundary Designations	
# — #	- Large Area Smear	RA - Radiation Area	BA - Radiological Buffer Area
#	- Contact Dose Rate	HR - High Radiation Area	CA - Contamination Area
#	- 30 cm Dose Rate	VR - Very High Radiation Area	HC - High Contamination Area
#	- General Area Dose Rate	AR - Airborne Radioactivity Area	FC - Fixed Contamination Area
SOP	- Step-off Pad	RM - Radioactive Materials Area	SC - Soil Contamination Area
AS	- Air Sample Location	UM - Underground Radioactive Materials Area	

Default units are in mR/hr and are for open window beta/gamma readings. Letter suffixes with the number indicate specific radiations: B - Beta (mRad/hr), G - Gamma (mR/hr), N - Neutron (mRem/hr). Boundary designations are looking from the designations into the zoned area.

Appendix C

SUMMARY OF 1988 SAMPLING CAMPAIGN RESULTS

APPENDIX C
SUMMARY OF 1988 SAMPLING CAMPAIGN RESULTS[a]

Liquid and Solid Sampling Results

Tank T-1	L35	L36	S37
avg. pH=9.7			
[RCRA metals (L=mg/L, S=mg/kg)]			
Ag	0.01	0.005	2.1
As	<0.8	<0.8	<2
Ba	<0.04	0.05	88
Cd	<0.02	<0.02	12.9
Cr	0.29	0.18	(130)
Hg	0.06	0.07	74
Ni	<0.2	<0.02	190
Pb	<1	<1	(860)
Se	<0.2	<0.02	(<2)
Tl	<0.2	<0.02	1.7
[Process metals (L=mg/L, S=mg/kg)]			
Si	9.34	6.81	NA
U	172	175	2800
Beta/gamma emitters (L=Bq/mL, S=Bq/g)			
^{137}Cs	7.4	7.5	3.9E5
^{14}C	*	*	48
^{152}Eu	*	*	1.4E5
^{154}Eu	*	*	1.2E5
^{155}Eu	*	*	2.3E4
^{3}H	71	71	26
^{60}Co	<50	<50	2.6E5
^{90}Sr	3.3E3	3.4E3	3.2E7
Alpha emitters ((L=Bq/mL, S=Bq/g)			
^{233}U	180	200	*
^{238}Pu	*	*	3.4E4
^{239}Pu	*	*	6.5E3

() - suspect data, * - data not available, NA - data not applicable

---

[a] Source document: Autrey, J. W., D. A. Costanzo, W. H. Griest, L. L. Kaiser, J. M. Keller, C. E. Nix, and B. A. Tomkins 1990. *Sampling and Analysis of the Inactive Waste Storage Tank Contents*. ORNL/ER-13. Oak Ridge National Laboratory.

APPENDIX C
SUMMARY OF 1988 SAMPLING CAMPAIGN RESULTS

Liquid and Solid Sampling Results

Tank T-2	L38	L39	L112	S40
avg. pH=9.9				
[RCRA metals (L=mg/L, S=mg/kg)]				
Ag	<0.002	0.002	<0.002	2.9
As	<0.8	<0.8	<0.8	<1
Ba	<0.04	<0.04	0.06	33
Cd	<0.02	<0.02	<0.02	6.6
Cr	0.44	<0.1	<0.1	(180)
Hg	0.1	0.15	0.1	70
Ni	<0.2	<0.2	<0.2	72
Pb	<1	<1	<1	(350)
Se	<0.09	<0.09	<0.09	(<1)
Tl	<0.09	<0.09	<0.09	<1
[Process metals (L=mg/L, S=mg/kg)]				
Si	5.07	6.97	6.81	NA
U	166	158	161	1000
Beta/gamma emitters (L=Bq/mL, S=Bq/g)				
^{137}Cs	1.4E5	1.4E5	1.4E5	2.5E5
^{14}C	480	230	360	17
^{152}Eu	*	*	*	3.8E4
^{154}Eu	*	*	*	2.6E4
^{155}Eu	*	*	*	3.8E3
^{3}H	210	210	210	95
^{60}Co	<75	<75	<75	6.4E4
^{90}Sr	2.5E3	2.7E3	2.8E3	1.2E7
Alpha emitters ((L=Bq/mL, S=Bq/g)				
^{233}U	190	180	180	8.3E3
^{238}Pu	*	*	*	3.1E3
^{239}Pu	*	*	*	5.1E3
^{244}Cm	*	*	*	<200
^{252}Cf	*	*	*	1.8E5

() - suspect data, * - data not available, NA - data not applicable

APPENDIX C
SUMMARY OF 1988 SAMPLING CAMPAIGN RESULTS

Liquid and Solid Sampling Results

Tank T-3	L42	S43
avg. pH=12.7		
[RCRA metals (L=mg/L, S=mg/kg)]		
Ag	<0.01	0.15
As	0.4	<3
Ba	<0.02	76
Cd	<0.01	8.5
Cr	14	(69)
Hg	5.7	40
Ni	<0.1	57
Pb	<0.5	(300)
Se	<0.5	(0.74)
Tl	<0.5	<0.6
[Process metals (L=mg/L, S=mg/kg)]		
Si	77.1	NA
U	0.2	3060
Beta/gamma emitters (L=Bq/mL, S=Bq/g)		
^{137}Cs	2.7E5	1.3E6
^{14}C	*	760
^{152}Eu	*	5.1E4
^{154}Eu	*	5.3E4
^{3}H	170	77
^{60}Co	360	1.6E5
^{90}Sr	360	8.1E6
Alpha emitters ((L=Bq/mL, S=Bq/g)		
^{233}U	2.0	8.3E3
^{238}Pu	*	1.4E4
^{239}Pu	*	5.3E3
^{244}Cm	*	1.8E5
^{252}Cf	*	<200

() - suspect data, * - data not available, NA - data not applicable

APPENDIX C
SUMMARY OF 1988 SAMPLING CAMPAIGN RESULTS

Liquid and Solid Sampling Results

Tank T-4	L44	L45	L111	S46
avg. pH=11.7				
[RCRA metals (L=mg/L, S=mg/kg)]				
Ag	0.017	<0.02	0.018	(1.7)
As	<0.8	<0.8	<0.4	<4
Ba	<0.04	<0.04	<0.02	<50
Cd	<0.02	<0.02	<0.01	10
Cr	9.4	14	13	(102)
Hg	1.1	2.7	7.9	585
Ni	<0.2	<0.2	<0.1	160
Pb	<1	<1	<0.5	(510)
Se	<0.09	<0.09	<0.23	(1.5)
Tl	<0.09	<0.09	<0.23	0.73
[Process metals (L=mg/L, S=mg/kg)]				
Si	1.96	1.45	1.96	NA
U	25.7	27.8	23.3	1850
Beta/gamma emitters (L=Bq/mL, S=Bq/g)				
^{137}Cs	3.0E5	3.0E5	3.0E5	4.5E5
^{14}C	*	*	*	510
^{152}Eu	*	*	*	5.2E4
^{154}Eu	*	*	*	4.4E4
^{155}Eu	*	*	*	7.0E3
^{3}H	110	110	110	28
^{60}Co	64	52	52	6.0E4
^{90}Sr	1.2E3	1.4E3	1.4E3	2.2E7
Alpha emitters ((L=Bq/mL, S=Bq/g)				
^{233}U	22	29	23	7.1E3
^{238}Pu	*	*	*	2.2E4
^{239}Pu	*	*	*	580
$^{238}Th/^{232}Th$	*	*	*	4.6E3
^{241}Am	*	*	*	8.2E3
^{244}Cm	*	*	*	2.1E5

() - suspect data, * - data not available, NA - data not applicable

APPENDIX C
SUMMARY OF 1988 SAMPLING CAMPAIGN RESULTS

Liquid and Solid Sampling Results

Tank T-9	L47	S48

avg. pH=9.1

[RCRA metals (L=mg/L, S=mg/kg)]

Ag	0.01	0.21
As	<0.8	2
Ba	0.12	115
Cd	<0.02	7.8
Cr	0.4	(<10)
Hg	3.4	39
Ni	<0.2	390
Pb	<1	(540)
Se	<0.09	(<2)
Tl	<0.09	<2

[Process metals (L=mg/L, S=mg/kg)]

Si	9.76	NA
U	852	2930

Beta/gamma emitters (L=Bq/mL, S=Bq/g)

^{137}Cs	2.9E5	4.0E5
^{14}C	*	2.2E3
^{152}Eu	*	3.5E4
^{154}Eu	*	8.9E3
^{3}H	160	34E
^{60}Co	6.0E3	4.3E4
^{90}Sr	3.6E4	1.4E7

Alpha emitters ((L=Bq/mL, S=Bq/g)

^{233}U	660	4.4E3
^{238}Pu	*	1.0E4
^{239}Pu	*	4.3E3
^{244}Cm	*	9.7E4
^{252}Cf	*	<2

() - suspect data, * - data not available, NA - data not applicable

Appendix D

SUMMARY OF 1995 SAMPLING CAMPAIGN RESULTS

APPENDIX D
SUMMARY OF 1995 SAMPLING CAMPAIGN RESULTS

Note: These results are preliminary and have not been verified.

Liquid Sampling Results

Customer Id: T-1 ORNL Sample No: 960123-151

Analysis	Result	Error	UNITS
AG	< 2.15E-02	±	µg/mL
AL	4.19E-01	± 2.67E-02	µg/mL
AS	1.00E-02	± 2.24E-03	µg/mL
BA	< 2.34E-03	±	µg/mL
BE	< 2.67E-03	±	µg/mL
BR	< 5.00	±	µg/mL
CA	5.78E+00	± 5.34E-02	µg/mL
CD	< 3.67E-02	±	µg/mL
CL	464	± 1	µg/mL
CO	< 2.40E-02	±	µg/mL
CO-60	2.1E1	± 0.8E1	Bq/mL
CR	1.52E+00	± 2.34E-02	µg/mL
CS-137	6.4E4	± 0.1E4	Bq/mL
CU	1.99E-01	± 3.34E-03	µg/mL
DENSITY	1.010	± 0.001	g/ml
F	37.5	± 0.6	µg/mL
FE	1.00E-02	± 0.00E+00	µg/mL
HG	5.44E-01	± 2.32E-03	µg/mL
K	8.47E+02	± 7.08E+00	µg/mL
MG	1.11E+00	± 8.02E-02	µg/mL
MN	< 2.67E-03	±	µg/mL
NA	2.21E+03	± 4.05E+00	µg/mL
NI	< 3.76E-02	±	µg/mL
NO3	141	±4	ug.ml
PB	< 8.35E-03	±	µg/mL
PH	9.33	±	
PHOTO	960124	±	
PO4	< 20.0	±	µg/mL
SB	< 3.68E-01	±	µg/mL
SE	< 8.35E-03	±	µg/mL
SO4	557	± 45	µg/mL
TH	2.37E-01	± 9.69E-02	µg/mL
TL	< 8.35E-03	±	µg/mL
U	2.81E+02	± 6.07E+00	µg/mL
V	< 6.85E-03	±	µg/mL
ZN	< 4.93E-02	±	µg/mL

APPENDIX D
SUMMARY OF 1995 SAMPLING CAMPAIGN RESULTS

Note: These results are preliminary and have not been verified.

Liquid Sampling Results

Customer Id: T-2 ORNL Sample No: 960123-152

Analysis	Result	Error	UNITS
AG	< 2.15E-02	±	µg/mL
AL	7.13E-01	± 3.01E-02	µg/mL
AS	9.35E-03	± 0.00E+00	µg/mL
BA	< 2.34E-03	±	µg/mL
BE	< 2.67E-03	±	µg/mL
BR	10.4	± 2.4	µg/mL
CA	8.98E+00	± 3.34E-02	µg/mL
CD	< 3.67E-02	±	µg/mL
CL	737	± 18	µg/mL
CO	< 2.40E-02	±	µg/mL
CO-60	6.7E1	± 1.4E1	Bq/mL
CR	1.46E+00	± 1.00E-02	µg/mL
CS-137	1.2E5	± 0.1E5	Bq/mL
CU	4.76E-01	± 6.68E-03	µg/mL
DENSITY	1.022	± 0.001	g/ml
F	53.4	± 1.0	µg/mL
FE	7.52E-02	± 3.34E-03	µg/mL
HG	2.73E-01	± 2.47E-03	µg/mL
K	1.38E+03	± 1.69E+01	µg/mL
MG	4.86E+00	± 7.01E-02	µg/mL
MN	< 2.67E-03	±	µg/mL
NA	3.59E+03	± 3.78E+01	µg/mL
NI	< 3.76E-02	±	µg/mL
NO3	95.2	± 3.1	µg/mL
PB	1.67E-02	± 6.68E-04	µg/mL
PH	9.47	±	
PHOTO	960124	±	
PO4	< 20.0	±	µg/mL
SB	< 3.68E-01	±	µg/mL
SE	< 8.35E-03	±	µg/mL
SO4	1380	± 25	µg/mL
TH	1.95E+00	± 1.67E-02	µg/mL
TL	< 8.35E-03	±	µg/mL
U	2.19E+02	± 2.09E+01	µg/mL
V	< 6.85E-03	±	µg/mL
ZN	1.05E-01	± 1.34E-02	µg/mL

APPENDIX D
SUMMARY OF 1995 SAMPLING CAMPAIGN RESULTS

Note: These results are preliminary and have not been verified.

Liquid Sampling Results

Customer Id: T-9 ORNL Sample No: 960123-153

Analysis	Result	Error	UNITS
AG	< 2.15E-02	±	µg/mL
AL	2.49E-01	± 2.67E-02	µg/mL
AS	< 8.35E-03	±	µg/mL
BA	< 2.34E-03	±	µg/mL
BE	< 2.67E-03	±	µg/mL
BR	50.9	± 2.1	µg/mL
CA	1.42E+01	± 1.70E-01	µg/mL
CD	< 3.67E-02	±	µg/mL
CL	5490	± 90	µg/mL
CO	< 2.40E-02	±	µg/mL
CO-60	2.8E1	± 0.9E1	Bq/mL
CR	2.00E-02	± 3.34E-03	µg/mL
CS-137	9.2E4	± 0.1E4	Bq/mL
CU	9.02E-02	± 6.68E-03	µg/mL
DENSITY	1.021	± 0.001	g/ml
F	19.5	± 10.3	µg/mL
FE	< 5.68E-03	±	µg/mL
HG	8.96E-01	± 7.79E-03	µg/mL
K	6.95E+02	± 2.02E+00	µg/mL
MG	2.97E+00	± 9.02E-02	µg/mL
MN	< 2.67E-03	±	µg/mL
NA	4.83E+03	± 5.09E+01	µg/mL
NI	< 3.76E-02	±	µg/mL
NO3	2100	± 10	µg/mL
PB	< 8.35E-03	±	µg/mL
PH	9.08	±	
PHOTO	960124	±	
PO4	< 20.0	±	µg/mL
SB	< 3.68E-01	±	µg/mL
SE	< 8.35E-03	±	µg/mL
SO4	821	±	4 µg/mL
TH	2.39E-01	± 5.34E-02	µg/mL
TL	< 8.35E-03	±	µg/mL
U	3.03E+02	± 1.25E+01	µg/mL
V	< 6.85E-03	±	µg/mL
ZN	< 4.93E-02	±	µg/mL

APPENDIX D
SUMMARY OF 1995 SAMPLING CAMPAIGN RESULTS

Note: These results are preliminary and have not been verified.

Liquid Sampling Results

Customer Id: T-3 ORNL Sample No: 960117-114

Analysis	Result	Error	UNITS
AG	< 2.15E-02	±	µg/mL
AL	5.49E-01	± 1.34E-02	µg/mL
AS	2.98E-01	± 1.57E-03	µg/mL
BA	< 2.34E-03	±	µg/mL
BE	< 2.67E-03	±	µg/mL
BR	25.5	± 3.5	µg/mL
CA	2.81E+00	± 3.34E-02	µg/mL
CD	< 3.67E-02	±	µg/mL
CL	1630	± 40	µg/mL
CO	< 2.40E-02	±	µg/mL
CO-60	1.2E2	± 0.2E2	Bq/mL
CR	1.66E+01	± 1.77E-01	µg/mL
CS-137	1.9E5	± 0.1E5	Bq/mL
CU	4.68E-02	± 3.34E-03	µg/mL
DENSITY	1.052	± 0.007	g/ml
F	283	± 21	µg/mL
FE	2.17E-02	± 3.34E-03	µg/mL
HG	1.28E+01	± 9.70E-02	µg/mL
K	3.42E+03	± 5.77E+01	µg/mL
MG	< 3.29E-02	±	µg/mL
MN	< 2.67E-03	±	µg/mL
NA	1.48E+04	± 1.81E+02	µg/mL
NI	7.18E-02	± 3.34E-03	µg/mL
NO3	7140	± 311	µg/mL
PB	< 8.35E-03	±	µg/mL
PH	11.55	±	
PHOTO	960118	±	
PO4	< 20.0	±	µg/mL
SB	< 3.68E-01	±	µg/mL
SE	2.79E-02	± 1.08E-02	µg/mL
SO4	4890	± 90	µg/mL
TC-99	29	± 1	Bq/mL
TH	< 8.10E-02	±	µg/mL
TL	< 8.35E-03	±	µg/mL
U	3.86E-01	± 1.04E-01	µg/mL
V	4.24E-01	± 6.68E-03	µg/mL
ZN	5.51E-02	± 3.67E-02	µg/mL

APPENDIX D
SUMMARY OF 1995 SAMPLING CAMPAIGN RESULTS

Note: These results are preliminary and have not been verified.

Liquid Sampling Results

Customer Id: T-4 ORNL Sample No: 960117-115

Analysis	Result	Error	UNITS
AG	< 2.15E-02	±	µg/mL
AL	5.17E+00	± 6.68E-02	µg/mL
AS	< 8.35E-03	±	µg/mL
BA	< 2.34E-03	±	µg/mL
BE	< 2.67E-03	±	µg/mL
BR	11.8	± 2.0	µg/mL
CA	1.53E+00	± 2.34E-02	µg/mL
CD	< 3.67E-02	±	µg/mL
CL	650	± 16	µg/mL
CO	< 2.40E-02	±	µg/mL
CO-60	< 17	±	Bq/mL
CR	8.41E+00	± 7.35E-02	µg/mL
CS-137	1.8E5	± 0.1E5	Bq/mL
CU	3.51E-02	± 3.34E-03	µg/mL
DENSITY	1.023	± 0.001	g/ml
F	59.2	± 0.1	µg/mL
FE	< 5.68E-03	±	µg/mL
HG	1.98E+00	± 1.51E-02	µg/mL
K	1.32E+03	± 1.96E+01	µg/mL
MG	6.51E-02	± 3.67E-02	µg/mL
MN	< 2.67E-03	±	µg/mL
NA	4.55E+03	± 3.47E+01	µg/mL
NI	< 3.76E-02	±	µg/mL
NO3	3010	± 24	µg/mL
PB	< 8.35E-03	±	µg/mL
PH	10.43	±	
PHOTO	960118	±	
PO4	< 20.0	±	µg/mL
SB	< 3.68E-01	±	µg/mL
SE	< 8.35E-03	±	µg/mL
SO4	1580	± 40	µg/mL
TC-99	24	± 1	Bq/mL
TH	1.42E-01	± 1.67E-02	µg/mL
TL	< 8.35E-03	±	µg/mL
U	1.95E+02	± 1.01E+00	µg/mL
V	< 6.85E-03	±	µg/mL
ZN	< 4.93E-02	±	µg/mL

APPENDIX D
SUMMARY OF 1995 SAMPLING CAMPAIGN RESULTS

Solid Sampling Results

To be added later as an addendum.

Appendix E

JUSTIFICATION FOR UTILIZING T-9 AS THE RECYCLE TANK

APPENDIX E
JUSTIFICATION FOR UTILIZING T-9 AS THE RECYCLE TANK DURING OHF SLUICING OPERATIONS

Old Hydrofracture (OHF) Facility sluicing operations require the use of a recycle tank to increase the concentration of solids prior to transfer of material to Melton Valley Storage Tanks. There are two options for a recycle tank: (1) to procure a tank and install (above or below grade) it at the site and (2) to use one of the existing tanks (T-1, T-2, T-3, T-4, or T-9) for this purpose.

Procurement of a new tank is costly in three ways: (1) the cost for procurement and installation, (2) the cost for shielding to prevent operator exposure (see p. E-4 for estimated radiation fields), and (3) the cost for disposal of the tank upon job completion. Use of an existing tank would be more cost effective. New risers on each tank will be required, regardless of whether a new tank is procured or an existing tank is used. Therefore, the expense of a new tank, its installation and disposal, and shielding is saved. The structural integrity of the existing tanks has been raised as an argument for using a new tank for recycle. Videotape of the internals of the tanks has been performed by Lockheed Martin Energy Systems, Inc. (Energy Systems) structural engineers, Energy Systems corrosion experts, and Bristol Equipment Company sluicing representatives. All feel that the tanks are not in the best of shape, but there is little concern for the structural integrity of the tanks during sluicing operations. Furthermore, the recycle tank will experience virtually no impact forces from sluicing operations until sludge removal is carried out on it.

When considering existing tanks, T-9 is an excellent candidate. The tank is 10 ft in diameter and about 24 ft long. As a result, it would be easy to keep the sludges suspended in this tank with a simple propeller mixer. The other four tanks are either 40 or 44 ft long. Due to length, mixing in any of these tanks would be more difficult. Also, radiation fields are of lesser concern, since tank T-9 is below grade.

APPENDIX E (continued)

Recalculation of Radiation Field from Recycle Tank During Sluicing of OHF Tanks

Perform calculations for 1000- and 2000-gal tank.

Assumptions: 1000-gal tank is 4 ft ID × 10.6 ft H
2000-gal tank is 6 ft ID × 9.5 ft H
wall thickness is ½ in.
20% suspension of sludge in supernatant
specific gravity is 1.1
only beta gamma emitters calculated

Source Term Calculations

Emitter	Sludge (Bq/g)	Supernatant (Bq/mL)	Conc. Used (Bq/mL)
^{137}Cs	3.6E7	3.0E5	8.2E6
^{90}Sr	3.2E7	3.6E4	7.1E6
^{60}Co	2.6E5	3.6E2	5.8E4
^{233}U	8.3E3	6.6E2	2.4E3
^{152}Eu	5.2E4	–	5.2E4
^{154}Eu	4.4E4	–	4.4E4

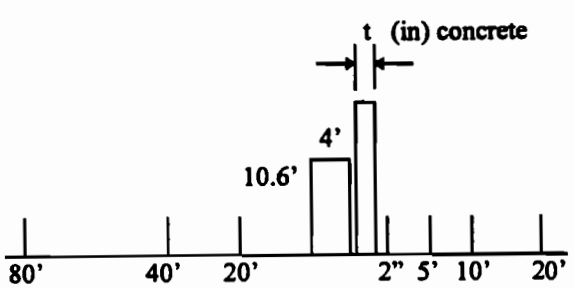

TANK 1

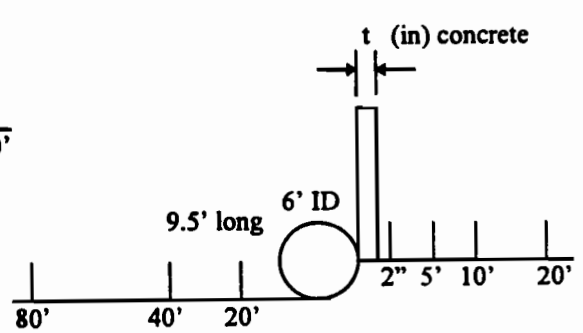

TANK 2

Dose Calculations

Tank	t (in) Shielding	Front Dose (mrem/hr) w/shielding 2"	5'	10'	20'	Back Dose (mrem/hr)w/o shielding 20'	40'	80'
1	4	8818	3129	1649	629	-	-	-
2	4	4670	2047	1096	416	-	-	-
1	6	3543	1385	764	304	2270	577	250
2	6	1840	905	510	202	2991	802	344
1	12	210	100	61	27	2148	630	162
2	12	110	65	41	18	2831	837	217
1	18	14	7	5	2	2063	615	160
2	18	7	5	3	2	2719	817	214

Appendix F

MATERIAL BALANCE CALCULATIONS AND ESTIMATED SUICING REQUIREMENTS

Calculate the volume of water required in sluicing the OHF tanks to remove 95% of their inventory.

Assumptions:
S.G. of sludge = 1.2
solids in sludge = 35 %
majority of sludge is soft

For 90% removal per sluicing pass.

Tank	sludge (gal)	solids mass (lb)	H2O in sludge (gal)	H2O for 10%wt solids (gal)	solids removed per pass (lb)	total solids removed (%)	H2O required (gal)
T-1	800	2795	520	3024	2515	90	2504
	80	279	52	302	251	99	250
	8	28	5	30	25	100	25
							2779

Tank	sludge (gal)	solids mass (lb)	H2O in sludge (gal)	H2O for 10%wt solids (gal)	solids removed per pass (lb)	total solids removed (%)	H2O required (gal)
T-2	1210	4227	787	4574	3805	90	3787
	121	422	79	456	379	99	378
	12	42	8	45	38	100	38
							4203

Tank	sludge (gal)	solids mass (lb)	H2O in sludge (gal)	H2O for 10%wt solids (gal)	solids removed per pass (lb)	total solids removed (%)	H2O required (gal)
T-3	2030	7092	1320	7673	6383	90	6354
	202	707	132	765	638	99	634
	20	71	13	76	63	100	63
							7051

Tank	sludge (gal)	solids mass (lb)	H2O in sludge (gal)	H2O for 10%wt solids (gal)	solids removed per pass (lb)	total solids removed (%)	H2O required (gal)
T-4	1330	4647	865	5027	4182	90	4183
	133	465	86	501	417	99	415
	13	46	8	50	42	100	41
							4819

Tank	sludge (gal)	solids mass (lb)	H2O in sludge (gal)	H2O for 10%wt solids (gal)	solids removed per pass (lb)	total solids removed (%)	H2O required (gal)
T-9	490	1712	319	1852	1541	90	1534
	49	171	32	185	154	99	153
	5	17	3	18	15	100	15
							1702

For 80% removal per sluicing pass.

Tank	sludge (gal)	solids mass (lb)	H2O in sludge (gal)	H2O for 10%wt solids (gal)	solids removed per pass (lb)	total solids removed (%)	H2O required (gal)
T-1	800	2795	520	3024	2236	80	2504
	160	557	104	603	446	98	499
	32	111	21	120	89	99	100
							3103

Tank	sludge (gal)	solids mass (lb)	H2O in sludge (gal)	H2O for 10%wt solids (gal)	solids removed per pass (lb)	total solids removed (%)	H2O required (gal)
T-2	1210	4227	787	4574	3382	80	3787
	241	843	157	912	674	98	755
	48	168	31	182	135	99	151
							4693

Tank	sludge (gal)	solids mass (lb)	H2O in sludge (gal)	H2O for 10%wt solids (gal)	solids removed per pass (lb)	total solids removed (%)	H2O required (gal)
T-3	2030	7092	1320	7673	5674	80	6354
	405	1414	263	1530	1131	96	1267
	81	282	52	305	226	99	253
							7874

Tank	sludge (gal)	solids mass (lb)	H2O in sludge (gal)	H2O for 10%wt solids (gal)	solids removed per pass (lb)	total solids removed (%)	H2O required (gal)
T-4	1330	4647	865	5027	3717	80	4183
	265	927	172	1003	741	96	830
	53	185	34	200	148	99	166
							5189

Tank	sludge (gal)	solids mass (lb)	H2O in sludge (gal)	H2O for 10%wt solids (gal)	solids removed per pass (lb)	total solids removed (%)	H2O required (gal)
T-9	490	1712	319	1852	1370	80	1534
	98	341	64	369	273	96	306
	19	68	13	74	54	99	61
							1901

For 70% removal per sluicing pass.

Tank	sludge (gal)	solids mass (lb)	H2O in sludge (gal)	H2O for 10%wt solids (gal)	solids removed per pass (lb)	total solids removed (%)	H2O required (gal)
T-1	800	2795	520	3024	1956	70	2504
	239	836	156	905	585	91	749
	72	250	47	271	175	97	224
							3477

Tank	sludge (gal)	solids mass (lb)	H2O in sludge (gal)	H2O for 10%wt solids (gal)	solids removed per pass (lb)	total solids removed (%)	H2O required (gal)
T-2	1210	4227	787	4574	2959	70	3787
	362	1265	235	1366	885	91	1133
	108	378	70	409	265	97	339
							5259

Tank	sludge (gal)	solids mass (lb)	H2O in sludge (gal)	H2O for 10%wt solids (gal)	solids removed per pass (lb)	total solids removed (%)	H2O required (gal)
T-3	2030	7092	1320	7673	4964	70	6354
	607	2122	395	2295	1485	91	1901
	182	635	118	687	444	97	569
							8823

Tank	sludge (gal)	solids mass (lb)	H2O in sludge (gal)	H2O for 10%wt solids (gal)	solids removed per pass (lb)	total solids removed (%)	H2O required (gal)
T-4	1330	4647	865	5027	3253	70	4183
	398	1390	259	1504	973	91	1245
	119	416	77	450	291	97	373
							5781

Tank	sludge (gal)	solids mass (lb)	H2O in sludge (gal)	H2O for 10%wt solids (gal)	solids removed per pass (lb)	total solids removed (%)	H2O required (gal)
T-9	490	1712	319	1852	1198	70	1534
	147	512	95	554	358	91	459
	44	153	28	166	107	97	137
							2130

For 60% removal per sluicing pass.

Tank	sludge (gal)	solids mass (lb)	H2O in sludge (gal)	H2O for 10%wt solids (gal)	solids removed per pass (lb)	total solids removed (%)	H2O required (gal)
T-1	800	2795	520	3024	1677	60	2504
	319	1115	207	1206	669	84	999
	127	445	83	481	267	93	398
	51	177	33	192	106	97	159
							4060

Tank	sludge (gal)	solids mass (lb)	H2O in sludge (gal)	H2O for 10%wt solids (gal)	solids removed per pass (lb)	total solids removed (%)	H2O required (gal)
T-2	1210	4227	787	4574	2536	60	3787
	483	1686	314	1824	1012	84	1511
	162	573	125	728	404	93	603
	77	268	50	290	161	97	240
							6141

Tank	sludge (gal)	solids mass (lb)	H2O in sludge (gal)	H2O for 10%wt solids (gal)	solids removed per pass (lb)	total solids removed (%)	H2O required (gal)
T-3	2030	7092	1320	7673	4255	60	6354
	810	2829	526	3061	1697	84	2534
	323	1128	210	1221	677	93	1011
	129	450	84	487	270	97	403
							10302

Tank	sludge (gal)	solids mass (lb)	H2O in sludge (gal)	H2O for 10%wt solids (gal)	solids removed per pass (lb)	total solids removed (%)	H2O required (gal)
T-4	1330	4647	865	5027	2788	60	4183

	530	1853	345	2005	1112	94	1880
	212	739	138	800	444	93	662
	84	295	55	319	177	97	264
							8750

Tank	sludge (gal)	solids mass (lb)	H2O in sludge (gal)	H2O for 10%wt solids (gal)	solids removed per pass (lb)	total solids removed (%)	H2O required (gal)
T-9	490	1712	319	1852	1027	60	1534
	195	683	127	738	410	84	612
	78	272	51	295	163	93	244
	31	109	20	118	65	97	97
							2487

For 50% removal per sluicing pass.

Tank	sludge (gal)	solids mass (lb)	H2O in sludge (gal)	H2O for 10%wt solids (gal)	solids removed per pass (lb)	total solids removed (%)	H2O required (gal)
T-1	600	2765	520	3024	1387	50	2504
	399	1393	259	1508	697	75	1248
	199	695	129	752	347	87	622
	99	346	64	375	175	94	310
	49	173	32	187	88	97	155
							4840

Tank	sludge (gal)	solids mass (lb)	H2O in sludge (gal)	H2O for 10%wt solids (gal)	solids removed per pass (lb)	total solids removed (%)	H2O required (gal)
T-2	1210	4227	787	4574	2114	50	3787
	603	2108	392	2280	1054	75	1888
	301	1051	196	1137	525	87	941
	150	524	97	567	262	94	469
	75	261	48	283	131	97	234
							7320

Tank	sludge (gal)	solids mass (lb)	H2O in sludge (gal)	H2O for 10%wt solids (gal)	solids removed per pass (lb)	total solids removed (%)	H2O required (gal)
T-3	2030	7092	1320	7673	3546	50	6354
	1012	3536	658	3826	1768	75	3168
	505	1763	328	1907	881	87	1579
	252	878	164	951	439	94	787
	125	438	82	474	219	97	393
							12281

Tank	sludge (gal)	solids mass (lb)	H2O in sludge (gal)	H2O for 10%wt solids (gal)	solids removed per pass (lb)	total solids removed (%)	H2O required (gal)
T-4	1330	4647	865	5027	2323	50	4163
	663	2317	431	2507	1158	75	2076
	331	1155	215	1250	576	87	1035
	165	576	107	623	288	94	516
	82	287	53	311	144	97	257
							8044

Tank	sludge (gal)	solids mass (lb)	H2O in sludge (gal)	H2O for 10%wt solids (gal)	solids removed per pass (lb)	total solids removed (%)	H2O required (gal)
T-9	490	1712	319	1852	856	50	1534
	244	854	159	923	427	75	765
	122	426	79	460	213	87	381
	61	212	39	230	106	94	190
	30	106	20	114	53	97	95
							2964

Removal per Pass (%)	Total H2O Required (gal)
50	35452
60	29739
70	25470
80	22729
90	20353

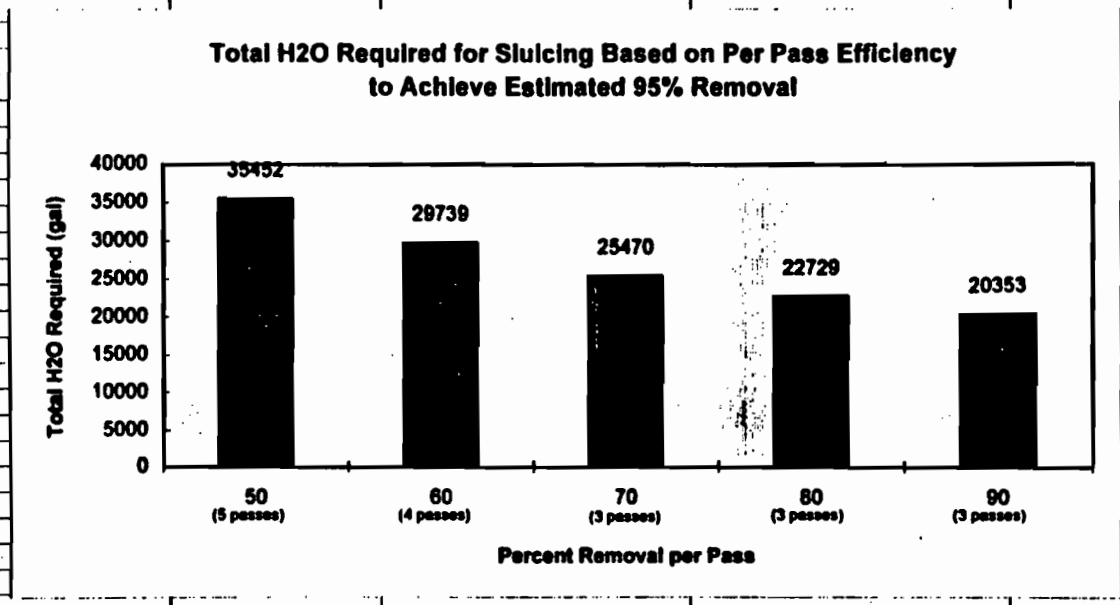
Total H2O Required for Sluicing Based on Per Pass Efficiency
to Achieve Estimated 95% Removal
Total H2O Required (gal)
40000
35000
30000
25000
20000
15000
10000
5000
0
35452
29739
25470
22729
20353
50
(5 passes)
60
(4 passes)
70
(3 passes)
80
(3 passes)
90
(3 passes)
Percent Removal per Pass

Appendix G

EQUIPMENT AND PIPING SKETCHES

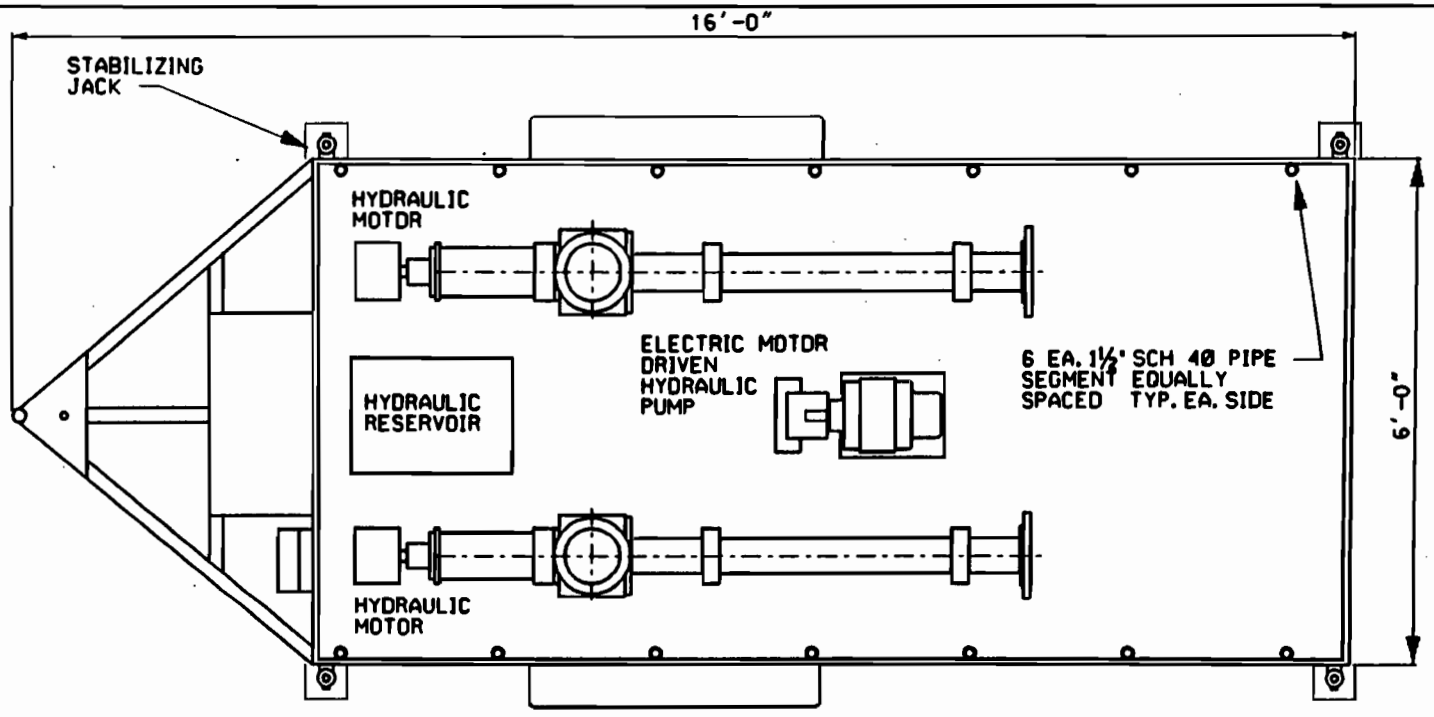

PUMP TRAILER PLAN

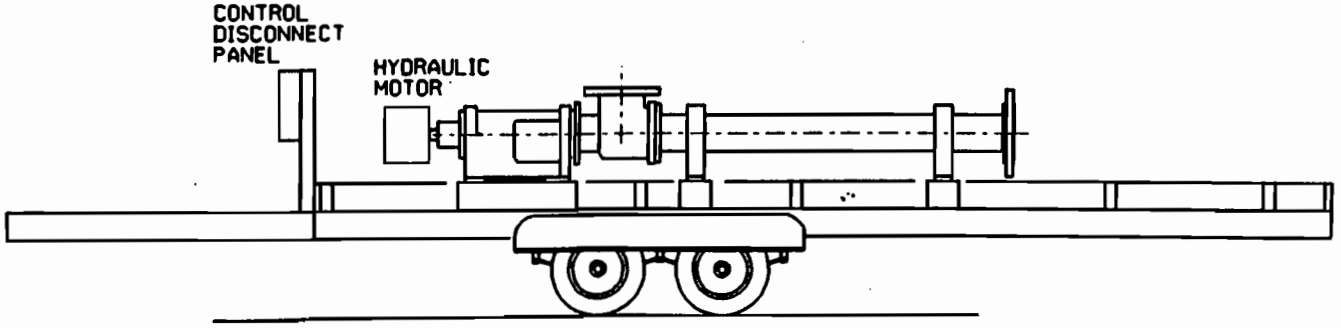

PUMP TRAILER ELEV.

ATTACHMENT 1

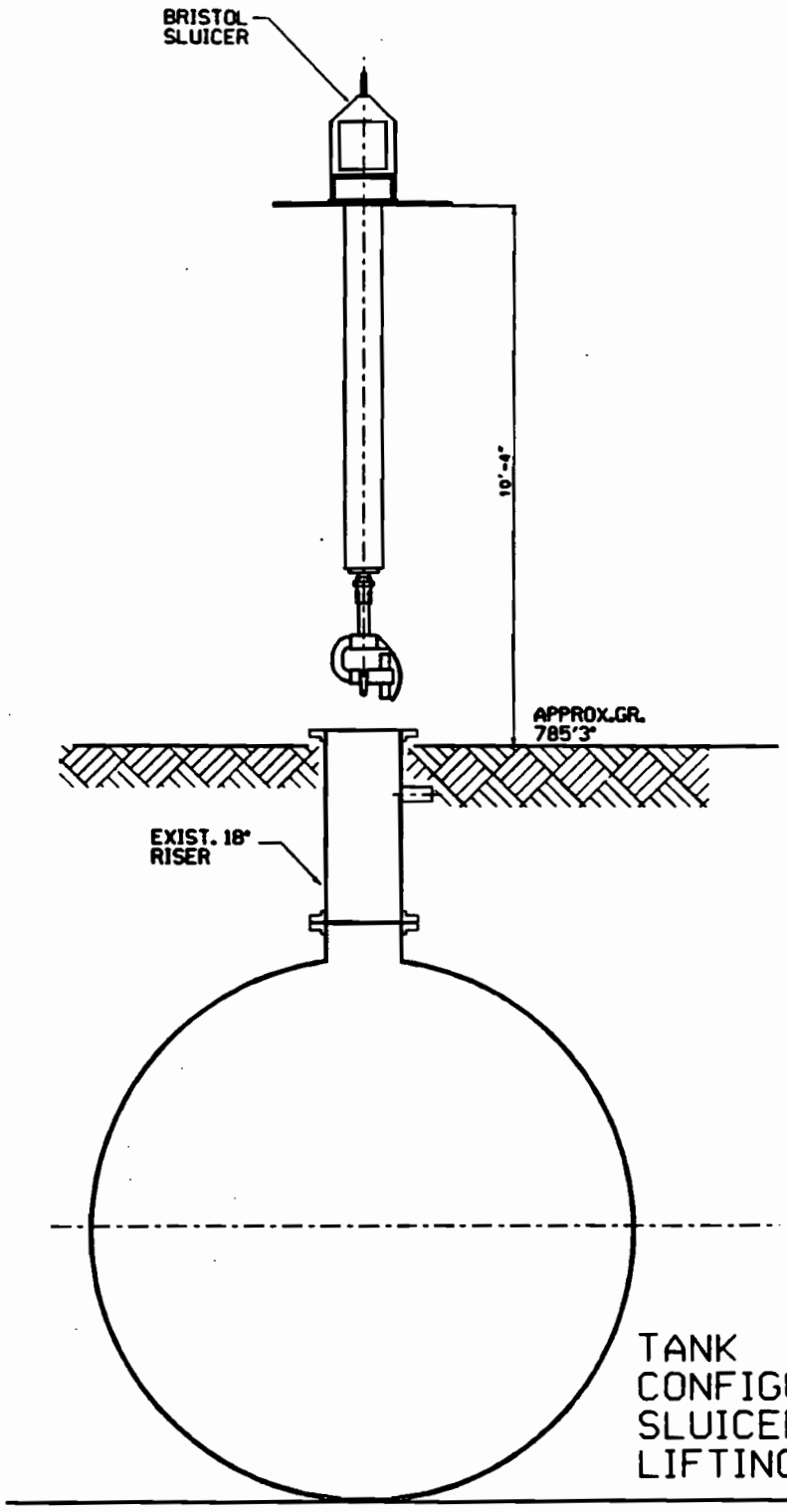

TANK T-4
CONFIGURATION
SLUICER REMOVAL
LIFTING HEIGHTS

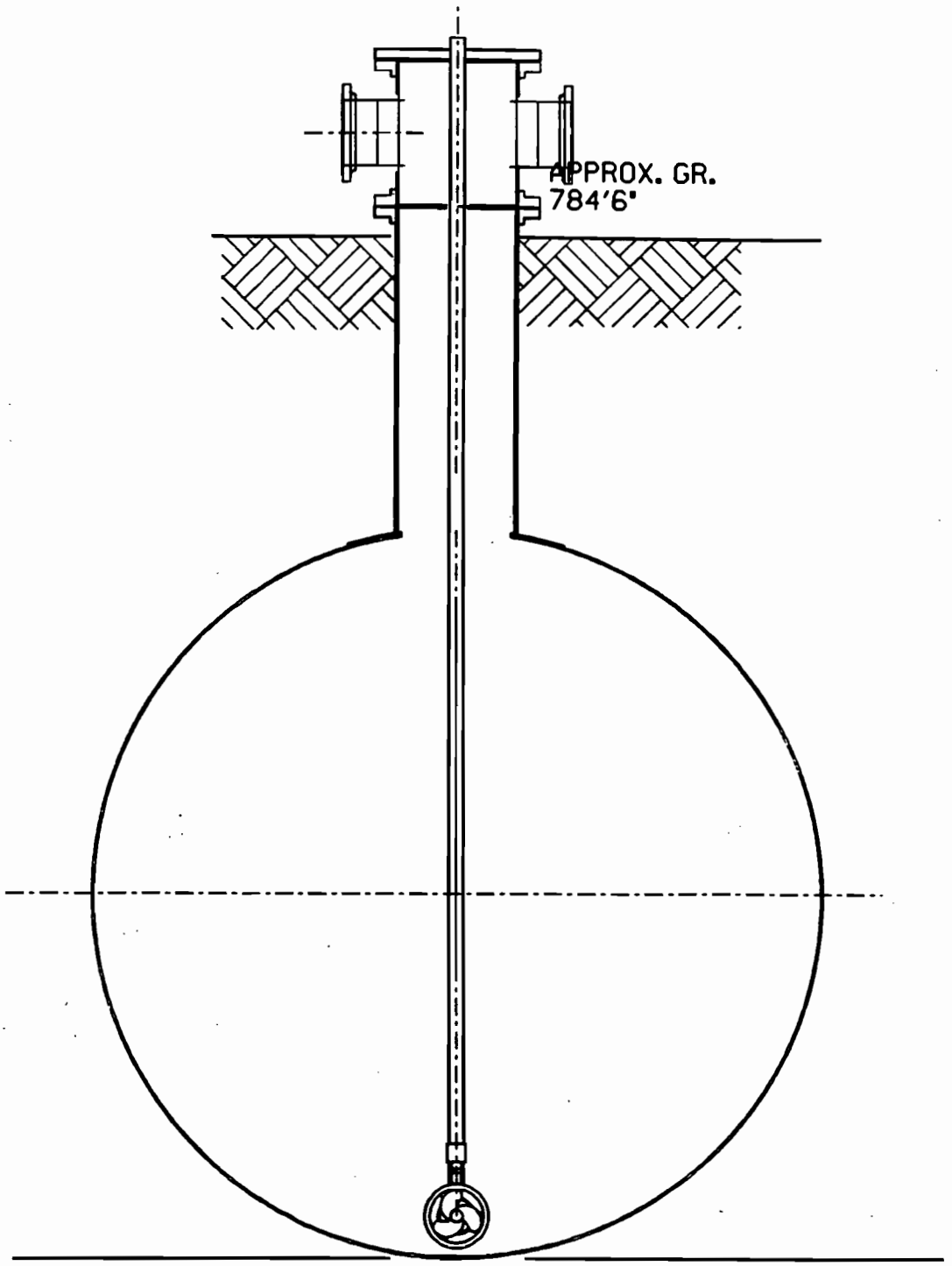

PROPOSED T-9
MIXER
INSTALLATION

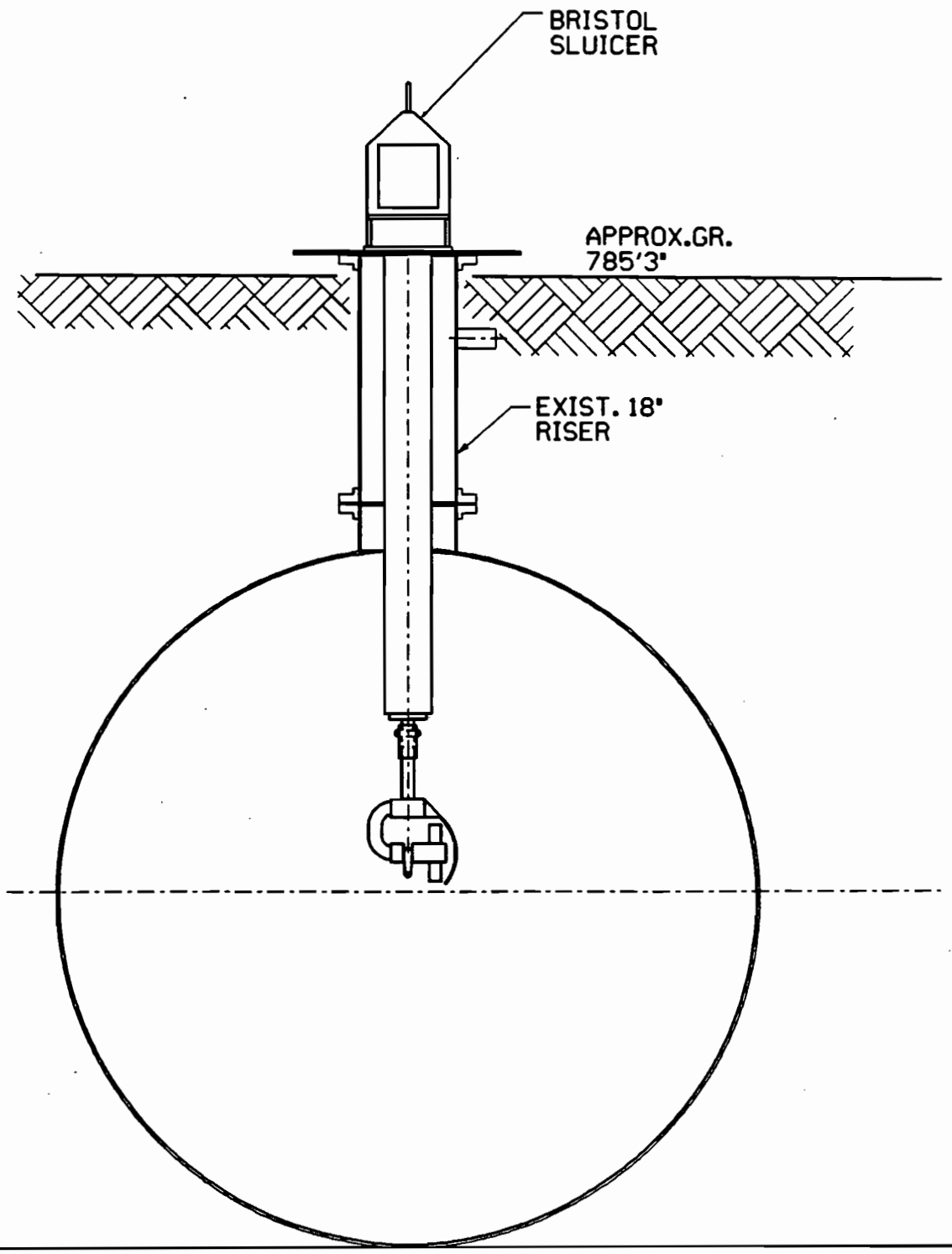

PROPOSED T-3 & T-4
CONFIGURATION

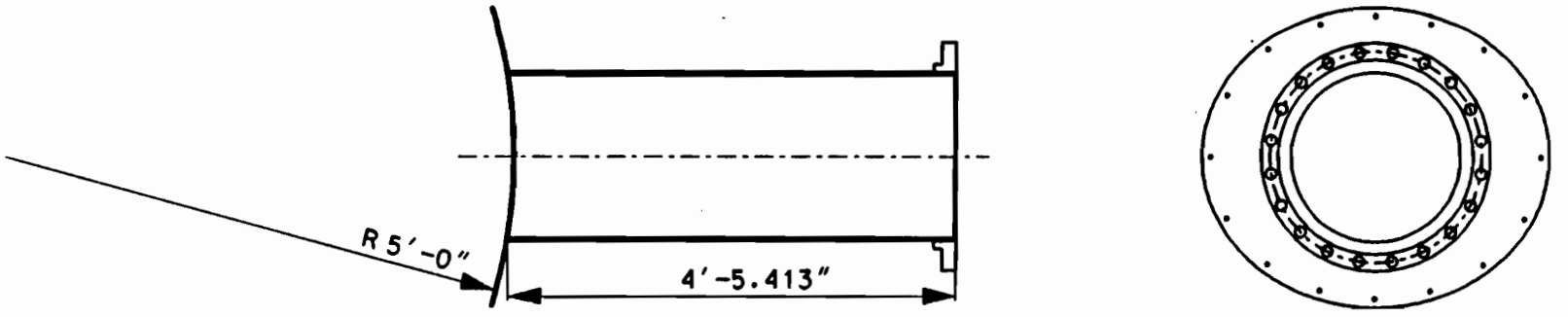
R 5'-0"
4'-5.413"

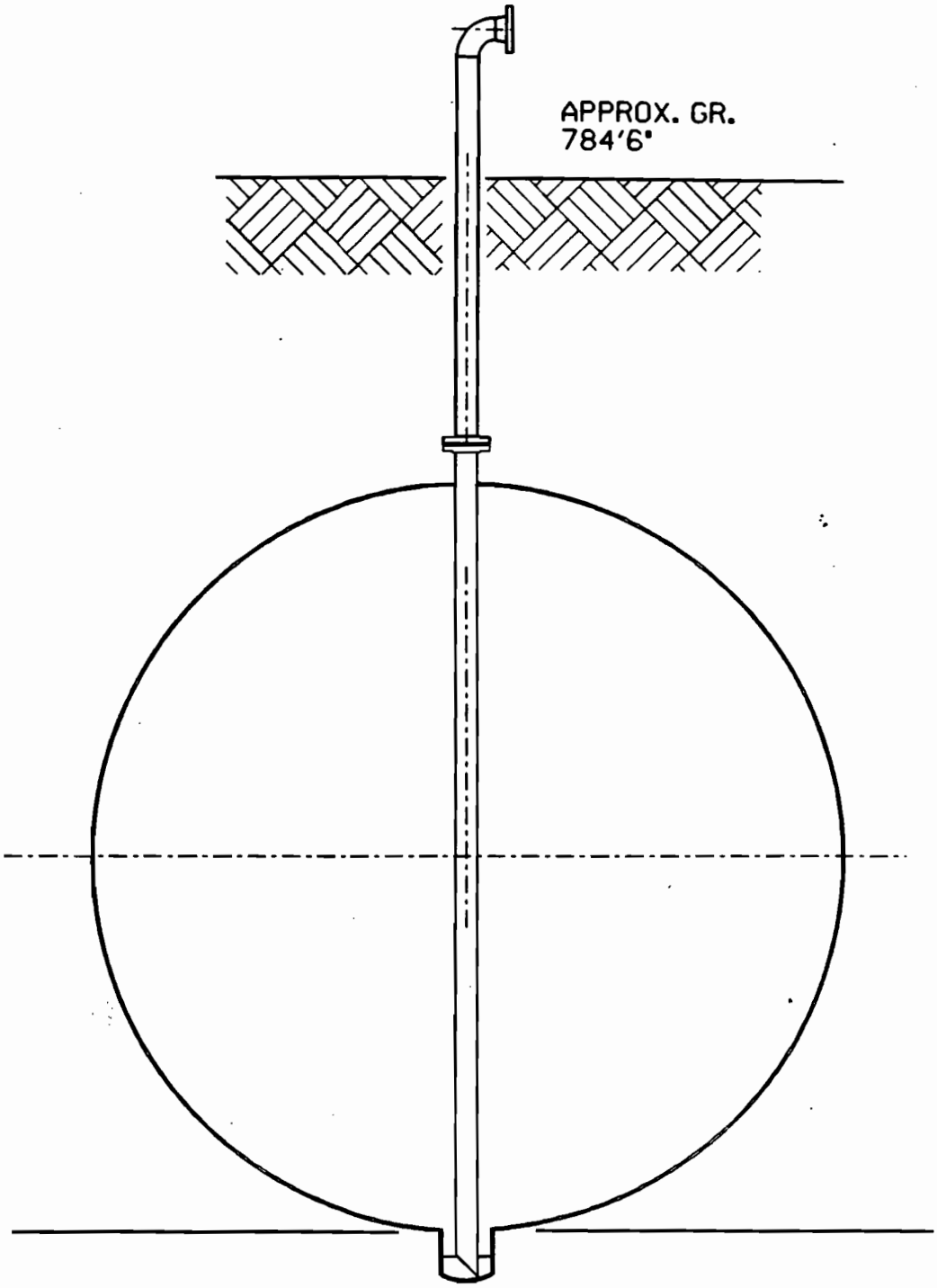

PROPOSED T-9
SUCTION LEG
CONFIGURATION

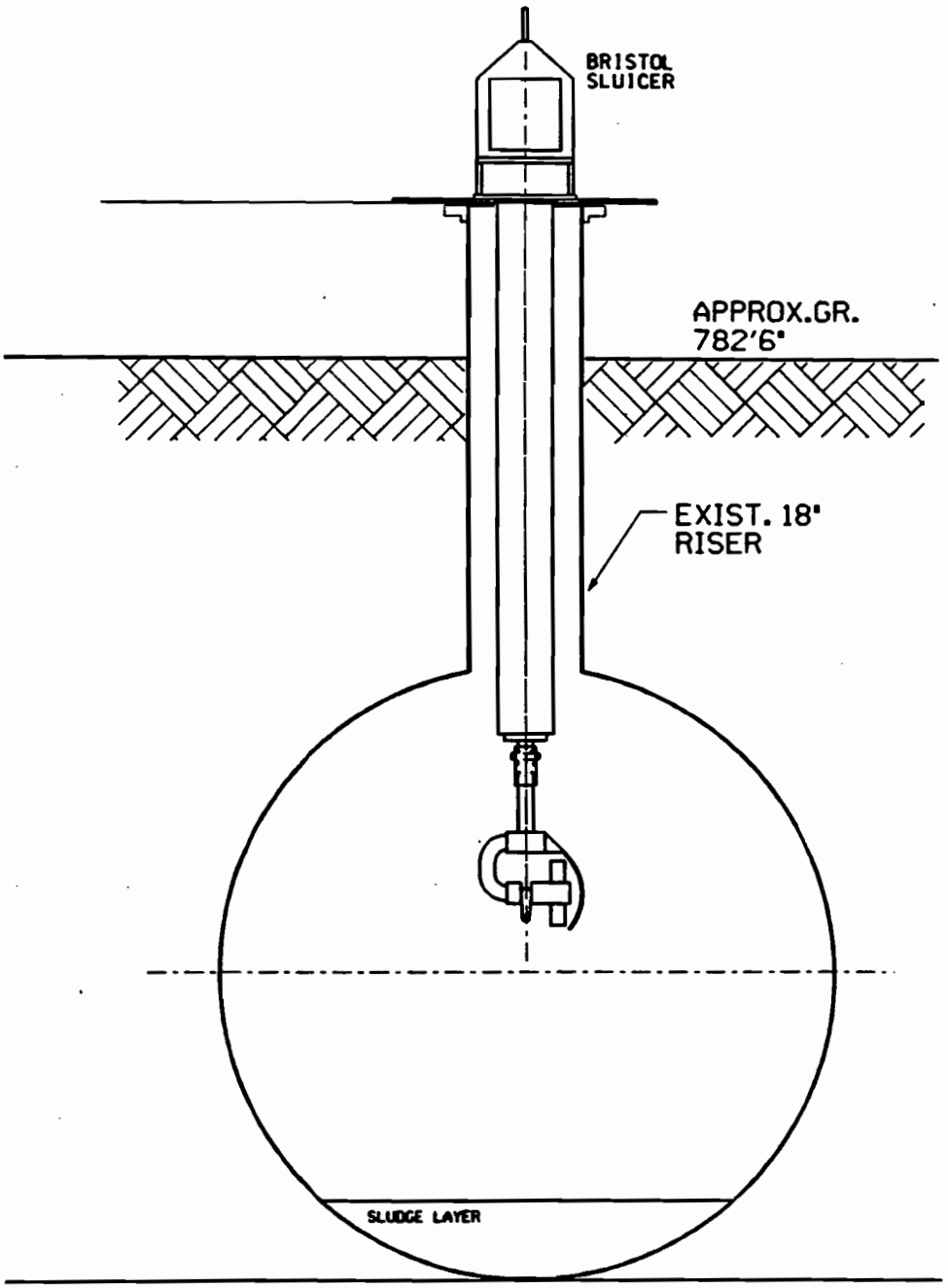

PROPOSED T-1, T-2
CONFIGURATION
SHOWN WITH SLUICER
IN PLACE

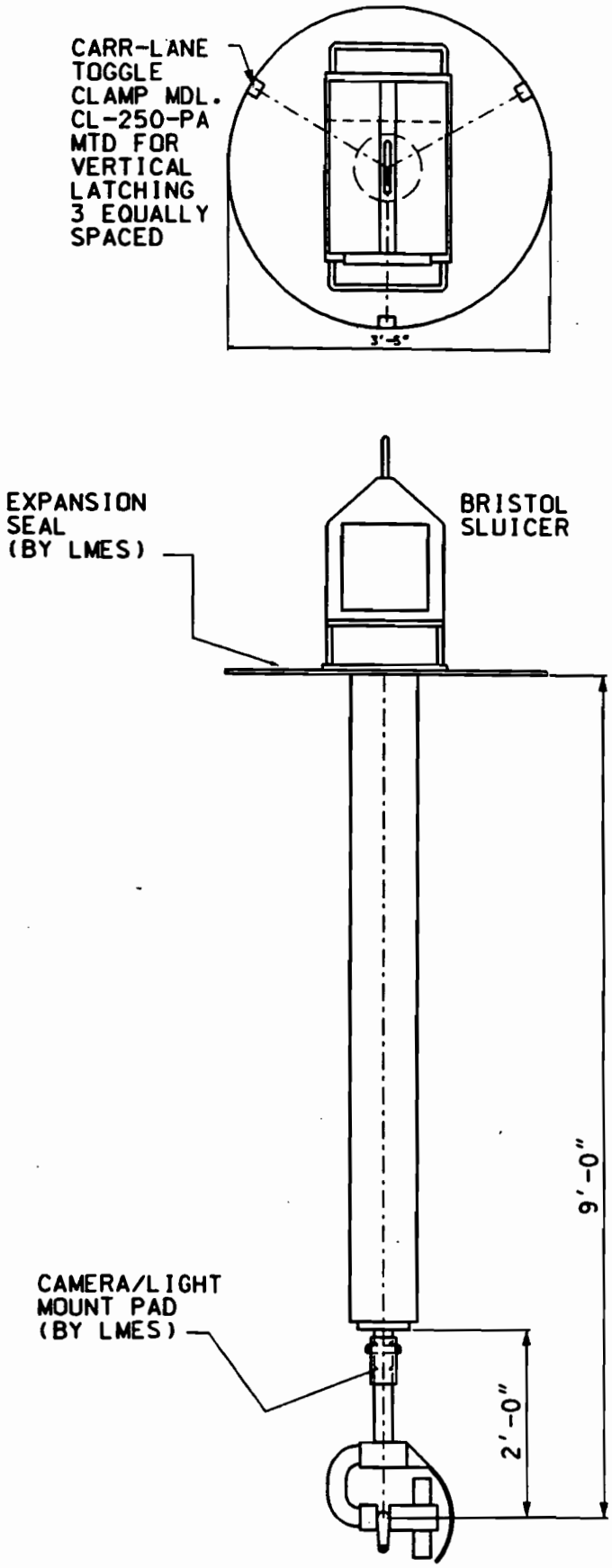
CARR-LANE
TOGGLE
CLAMP MDL.
CL-250-PA
MTD FOR
VERTICAL
LATCHING
3 EQUALLY
SPACED
3'-5"
EXPANSION
SEAL
(BY LMES)
BRISTOL
SLUICER
9'-0"
CAMERA/LIGHT
MOUNT PAD
(BY LMES)
2'-0"

Appendix H

STRUCTURAL ANALYSIS

Tanks were subjected to hydrostatic earth pressures with a peak of 560 psf at the top centerline, varying as a cosine function to zero at 90° from the top. Each tank was then subjected to a local pressure load of 150 psi from the sluicer jet over an area of 1 inch by 1 inch. The sluicer loading was applied at the bottom centerline of the tank. The tanks were supported by contact with the surrounding soil and gravel. The tank wall thicknesses were varied under these loading conditions, to find either tank buckling or extreme stress. Maximum Von Mises stresses for the various tanks and loadings are shown below.

10 1/2 Ft. Diameter Tank			
Tank Thickness, in	Hydrostatic Tank Stress, psi	Sluicer Stress, psi	Buckle?
0.625	1630	1630	No
0.375	1920	1920	No
0.3125	2160	2160	No
0.1875	5240	5250	No
0.125	—	—	Yes
10 Ft. Diameter Tank			
0.5	1600	1600	No
0.25	2650	2650	No
0.1875	4450	4460	No
0.125	—	—	Yes
8 Ft. Diameter Tank			
0.5	1850	1850	No
0.25	2720	2730	No
0.1875	3710	3720	No
0.125	9280	9300	No
0.0625	—	—	Yes

It appears that the tank stresses due to the sluicer jet are insignificant compared to the stress due to the hydrostatic loading. All stresses remained below a reasonable allowable level for generic steel (about 27 ksi) for all cases investigated. Tank buckling due to thinning under hydrostatic loading appears to be the limiting factor. If this tank buckling has not already occurred, then it is unlikely that the induced stress due to the sluicer jet loading will cause any problems.

Tanks were subjected to the same hydrostatic earth pressures due to ground cover as previously, (with a peak of 560 psf), and simultaneously an additional equipment load. This equipment load was varied, up to a maximum of an additional 16 psi (2304 psf) at the top centerline of the tank. These loads were varied as a cosine function to zero at 90° from the top. The tanks were supported by contact with the surrounding soil and gravel. The tank wall thicknesses were varied under these loading conditions, to find either tank buckling or extreme stress. Maximum Von Mises stresses for the various tanks, thicknesses, and loadings are shown below.

10 1/2 Ft. Diameter Tank			
Tank Thickness, in	Tank Stress, psi	Equipment Load (Peak), psi	Buckle?
0.625	2500	2	No
0.375	3020	2	No
0.3125	3690	2	No
0.1875	—	2	Yes
0.625	5210	8	No
0.375	8620	8	No
0.3125	15100	8	No
0.625	6310	10	No
0.375	11900	10	No
0.3125	27600	10	No
0.625	7480	12	No
0.375	16500	12	No
0.3125	—	12	Yes
0.375	24600	14	No
0.375	—	16	Yes

10 Ft. Diameter Tank			
Tank Thickness, in	Tank Stress, psi	Equipment Load (Peak), psi	Buckle?
0.5	2400	2	No
0.25	4920	2	No
0.1875	12400	2	No
0.5	2820	3	No
0.25	6530	3	No
0.1875	—	3	Yes
0.5	4190	6	No
0.25	16600	6	No
0.5	5250	8	No
0.25	—	8	Yes
0.5	7680	12	No

8 Ft. Diameter Tank			
Tank Thickness, in	Tank Stress, psi	Equipment Load (Peak), psi	Buckle?
0.5	3800	4	No
0.25	6750	4	No
0.1875	13300	4	No
0.125	—	4	Yes
0.5	4880	6	No
0.25	9810	6	No
0.1875	—	6	Yes
0.5	8510	12	No
0.25	34800	12	No

It appears that the tank stresses due to the additional equipment loads are all below about 27 ksi, except for the 0.25 inch thick, 8 ft diameter tank. Buckling due to the additional load is the more likely failure criteria. A suitable factor of safety should be applied to the buckling failure, to prevent sudden catastrophic collapse.

The equipment load pressures are at the top of the tank surface. The initiating point load at the top of ground can be obtained by multiplying the tabulated load by 2827.

FRINGE PLOT LC=4.1 RES=1.1(VON-MISES) MSC/PATRAN R-1.4 ABAQUS 22-Mar-96 10:08:35

Typical Stress Distribution

Vertical Section Thru Tank

Under Earth Pressure Load

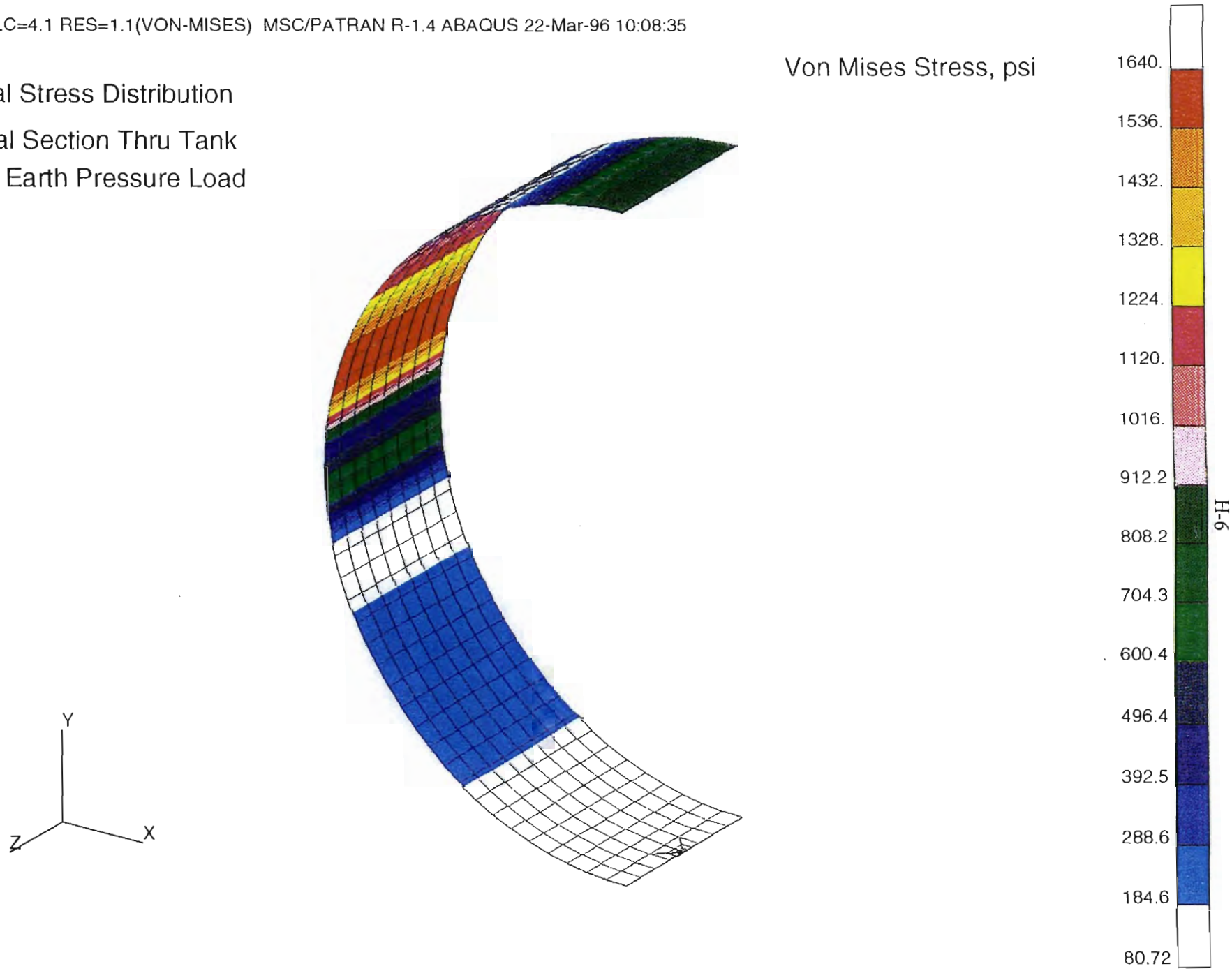

FRINGE PLOT LC=4.2 RES=1.1(VON-MISES) MSC/PATRAN R-1.4 ABAQUS 22-Mar-96 10:08:16

Typical Stress Distribution

Vertical Section Thru Tank
Under Earth Pressure Load
Plus Sluicing Load

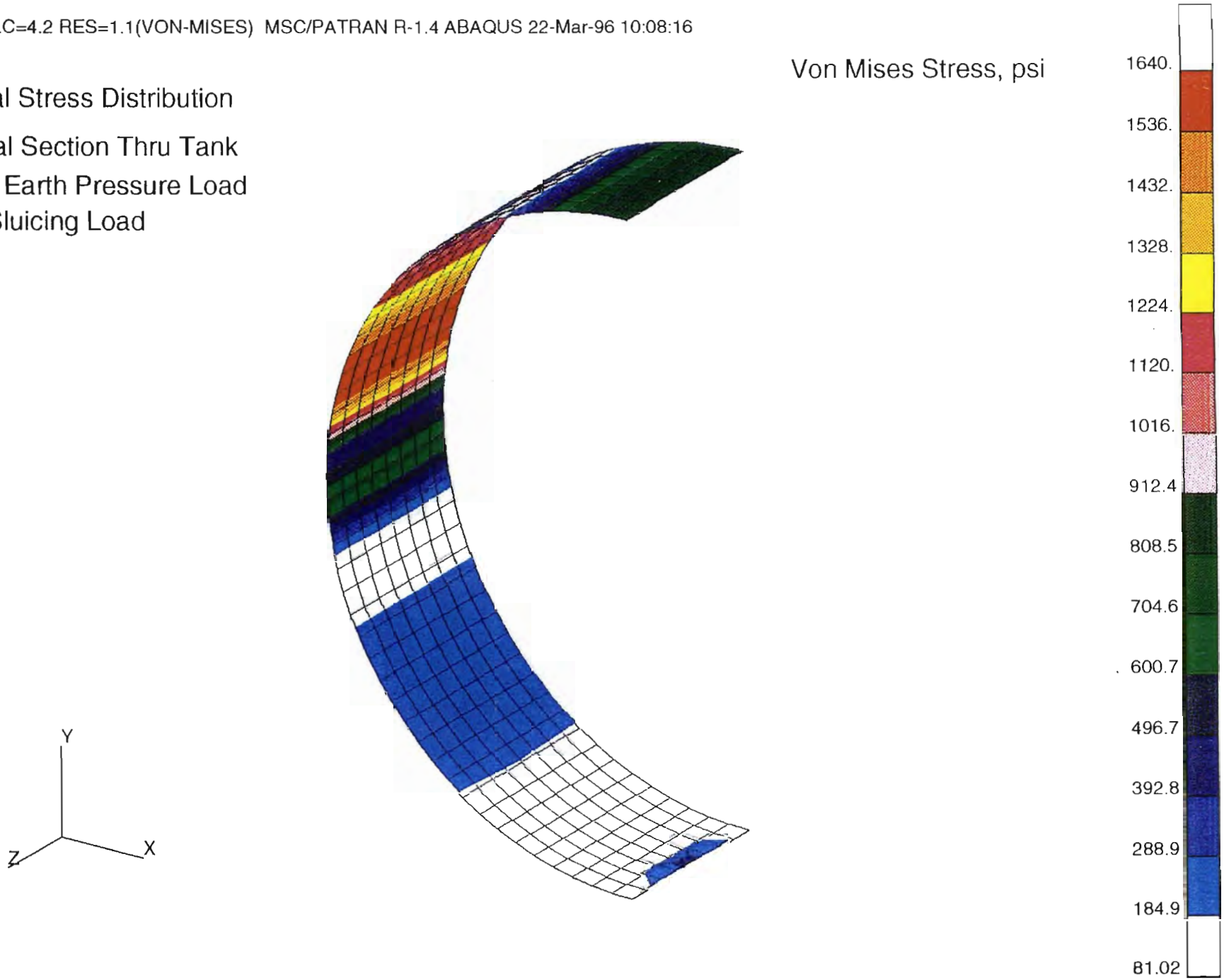

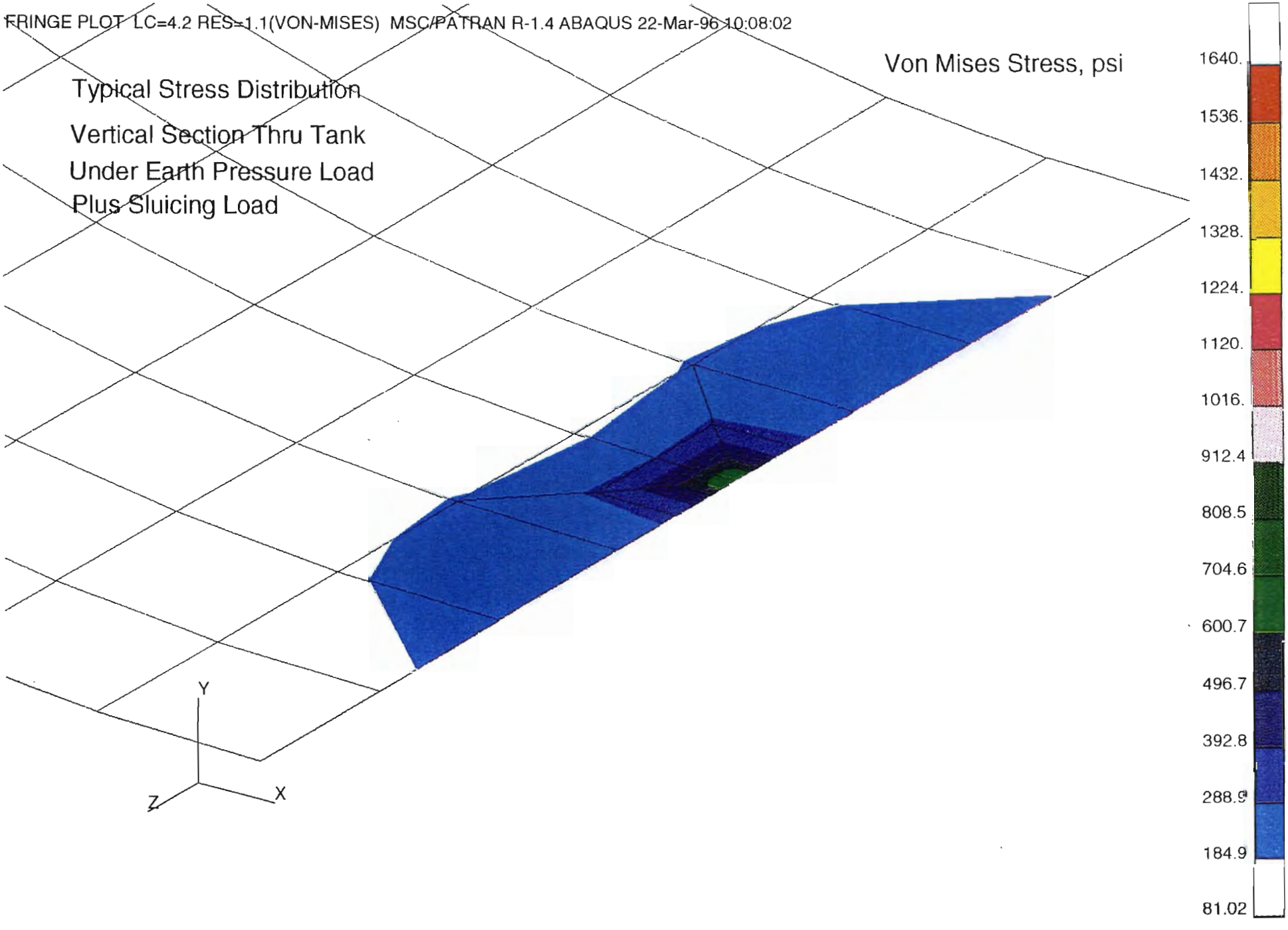
FRINGE PLOT LC=4.2 RES=1.1(VON-MISES) MSC/PATRAN R-1.4 ABAQUS 22-Mar-96 10:08:02
Typical Stress Distribution
Vertical Section Thru Tank
Under Earth Pressure Load
Plus Sluicing Load
Von Mises Stress, psi
1640.
1536.
1432.
1328.
1224.
1120.
1016.
912.4
808.5
704.6
600.7
496.7
392.8
288.9
184.9
81.02
Y
Z
X

Typical Deformed Shape
(Magnified 75x)

Vertical Section Thru Tank
Under Earth Pressure Load

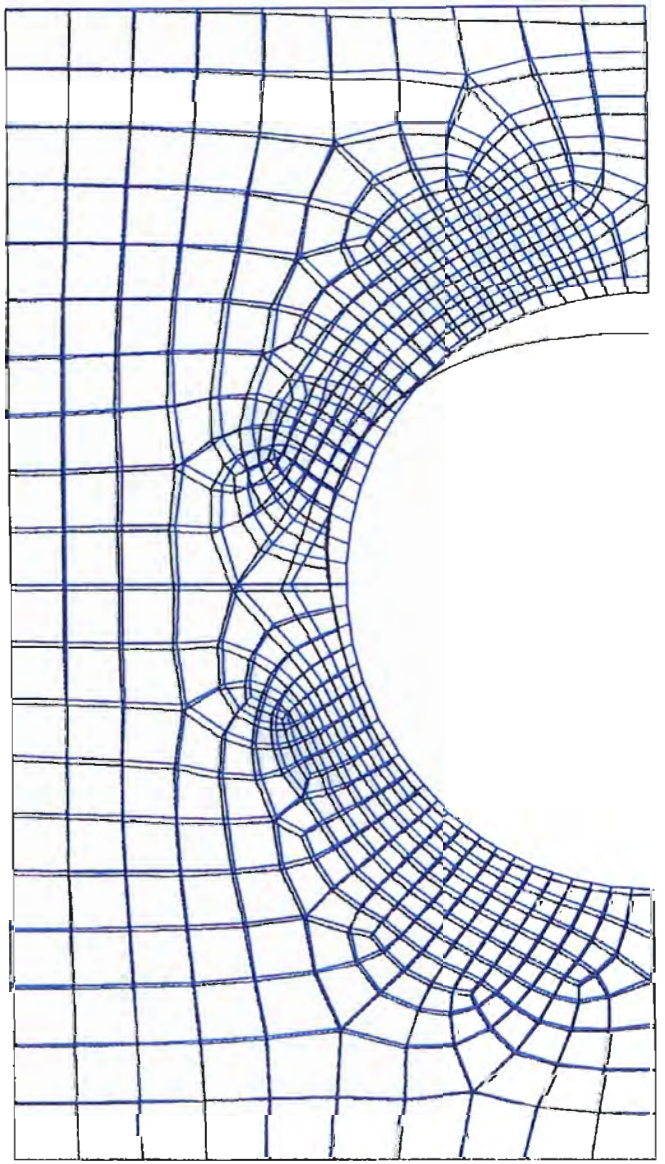

Undeformed Mesh

Deformed Mesh

Typical Deformed Shape
(Magnified 75x)
Vertical Section Thru Tank
Under Earth Pressure Load

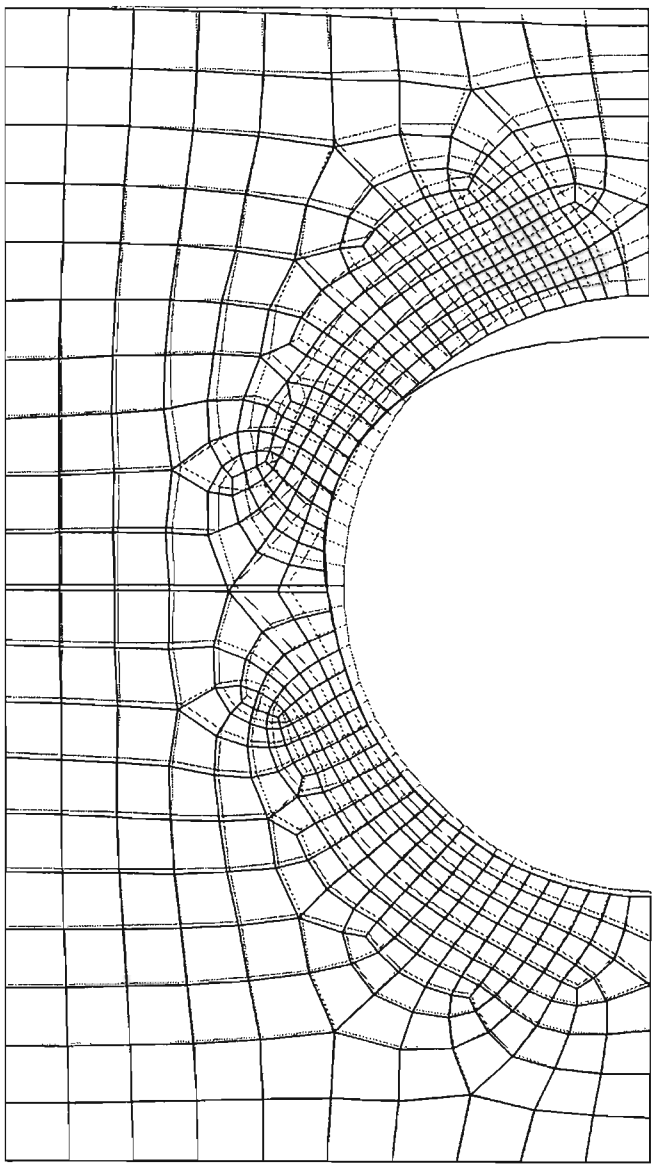

Undeformed Mesh
Deformed Mesh

Appendix I

RADIATION FIELD CALCULATIONS WITH PROPOSED EQUIPMENT LAYOUT

APPENDIX I

RADIATION FIELD CALCULATIONS FOR OHF TANKS WITH PROPOSED EQUIPMENT LAYOUT

SOURCE TERMS

Data used in generating the Source Terms are shown in Table I-1 below. These data are from Autrey, J. W., D. A. Costanzo, W. H. Griest, L. L. Kaiser, J. M. Keller, C. E. Nix, and B. A. Tomkins 1990. *Sampling and Analysis of the Inactive Waste Storage Tank Contents*, ORNL/ER-13.

Table I-1. Data Used in Generating Source Terms
(liquids Bq/mL, solids Bq/g)

Isotope	^{60}Co	^{90}Sr	^{137}Cs	^{233}U	^{152}Eu	^{154}Eu	^{155}Eu
Tank							
T1 (l)	50	3.4E3	7.4E4	71	–	–	–
T1 (s)	2.6E5	3.2E7	3.9E5	26	1.4E5	1.2E5	2.3E4
T2 (l)	75	2.8E3	1.4E5	1.9E2	–	–	–
T2 (s)	6.4E4	1.2E7	2.5E5	8.3E3	3.8E4	2.6E4	3.8E3
T3 (l)	3.6E2	3.6E4	2.7E5	6.6E2	–	–	–
T3 (s)	1.6E5	1.4E7	1.3E6	4.4E3	3.5E4	8.9E3	–
T4 (l)	64	1.4E3	3E5	23	–	–	–
T4 (s)	6.4E4	2.2E7	4.5E5	7.1E3	5.2E4	4.4E4	7E3
T9 (l)	6E3	3.6E4	2.9E5	6.6E2	–	–	–
T9 (s)	4.3E4	1.4E7	4E5	4.4E3	3.5E4	7E3	–
Average (l)	230	1.59E3	2.14E5	320	–	–	–
Average (s)	1.17E5	1.88E7	5.59E5	4.8E3	6E4	4.1E4	6.7E3

Three sources were calculated, based on the method that the sludge will be removed (one tank at a time), and based on a suspension of 20% sludge in the supernatant. The three sources used were the minimum (T2), the average, and the maximum (T3). These sources are listed in Table I-2.

Table I-2. Source terms used for calculations
(Bq/mL)

Isotope	^{60}Co	^{90}Sr	^{137}Cs	^{233}U	^{152}Eu	^{154}Eu	^{155}Eu
Source							
Minimum (T2)	1.29E4	2.4E6	1.9E5	1.85E3	7.6E3	5.2E3	7.6E2
Average	2.36E4	3.76E6	3.26E5	1.28E3	1.2E4	8.2E3	134
Maximum (T3)	3.24E4	2.84E6	5.3E5	1.54E3	7E3	1.78E3	–

A correction factor was used to convert the source term from Bq/ml into μCi/ml which ISOSHIELD requires. This was calculated as follows:

$$(1\ Bq/mL) \times (1d/s\text{-}Bq) /(3.7E10\ d/s\text{-}Ci) \times (1E6\ \mu Ci/Ci) \times 1.05 = 2.838E\text{-}5$$

SOURCE GEOMETRY

The geometry used to model the hoses was a line source shielded with 1 in. of Hypalon, which modeled a 2-in.-ID Hypalon hose inside a 4-in. Hypalon hose. A spherical volume source was used to model the pumps and grinder. A cylindrical source was used to model the transfer line. The dose points were calculated as a point next to the pump trailer, a point next to the location of the HVAC trailer (this trailer location was moved), a point next to the process water trailer (this was replaced with a hard piped line) and a point at the gravel road in line with tank T-4. These points are shown schematically in Fig. I.1.

The Hypalon was modeled assuming a composition of 20% hydrogen and 80% carbon.

The sources for the hoses were stretched horizontally to simplify the calculation. The volumes were calculated and multiplied by the above correction factor, then used for the parameter SFACT. These data are as follow:

Source 1 - Tank to pump - 38.5 ft length, volume = 6.8 gal, SFACT = 6.77E-7
Source 3 - pump to T9 - 28 ft length, volume = 4.6 gal, SFACT = 4.94E-7
Source 4 - T9 to pump - 24.5 ft length, volume = 4.0 gal, SFACT = 4.30E-7
Source 5 - Moyno pump - volume = 10.6 gal, SFACT = 1.14E-6
Source 6 - HP pump - volume = 10.6 gal, SFACT = 1.14E-6
Source 7 - grinder - volume = 2 gal, SFACT = 2.15E-7
Source 8 - pump to sluicer - 31.5 ft length, volume = 5.1 gal, SFACT = 5.48E-7

The transfer line was modeled with a cylindrical volume source 100 ft long. Although this is shorter than the 150-ft actual length, the computer had an arithmetic overflow with the source any longer than 100 ft. Modeling using a source 75 ft long or a source 100 ft long produced the same answer; therefore, the dose contributions from a source longer than 100 ft is nil.

Distances from the source to the dose points were graphically measured on a marked-up drawing, and angles of the source to dose point for the line sources were calculated from these measurements. The source to shield angle was always assumed to be 90°.

Doses from three thicknesses of ordinary concrete shielding were calculated: 4 in. to simulate a road barricade, and 8 in. and 12 in.

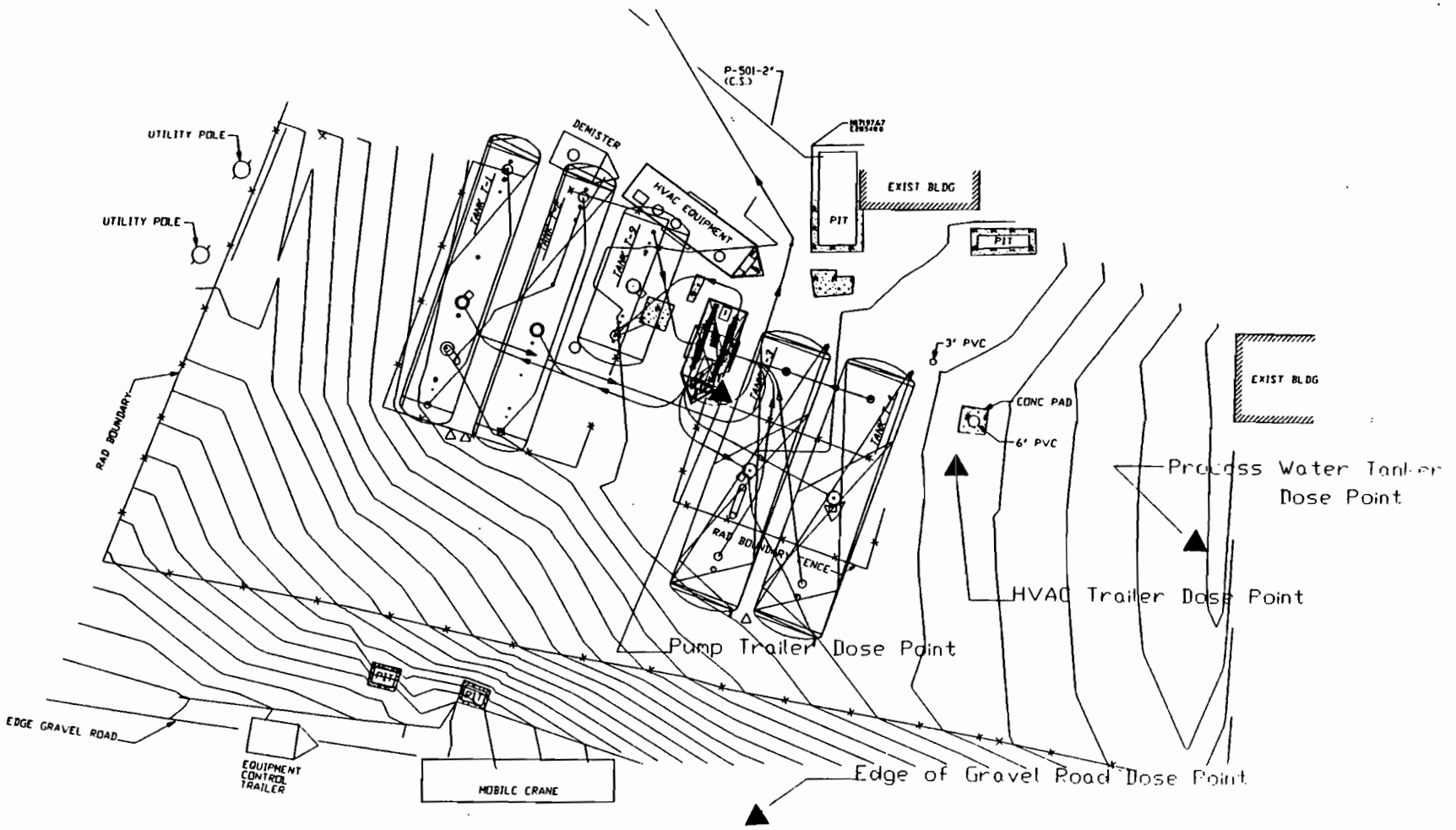

SLUDGE REMOVAL EQUIPMENT FOR WASTE STORAGE TANKS AT OLD HYDROFRACTURE FACILITY

SCALE: 1" = 10'

Fig. I.1 Dose Point Locations for Radiation Field Calculations

DOSE RATES

Applicable dose rates calculated from ISOSHIELD are listed in Table I-3.

Table I-3. Dose rates at various points (mrem/h)

Dose Point	Source 1	Source 3	Source 4	Source 5	Source 6	Source 7	Source 8	Total Dose
1	7.6	3.6	2.1	14.7	3.1	0.6	11.4	43.1
1A	12.8	6.1	3.6	25.4	5.3	1.1	19.3	73.6
1B	17.5	8.4	4.9	35.9	7.5	1.5	26.2	101.9
2	2.9	0.6	0.8	0.4	0.4	0.1	2.3	7.5
3	0.6	0.2	0.2	0.1	0.1	0	0.3	1.5
4	0.9	0.3	0.3	0.1	0.1	0.1	0.7	2.4
5	4.9	1.5	1.6	12.0	2.5	0.5	7.0	30
6	1.1	0.3	0.4	2.7	0.6	0.1	1.5	6.7
7	0.2	0	0.1	0.6	0.1	0	0.3	1.3
Transfer line @ contact	—	—	—	—	—	—	—	346
Hose @ contact	—	—	—	—	—	—	—	500
Hose@1 ft	179	181	180	205	205	54	178	—

The description of the sources and dose points are listed below.

Sources

Source 1 Sluiced tank to pump suction hose
Source 3 Pump discharge hose to tank T-9
Source 4 Hose from tank T-9 to high pressure pump suction
Source 5 Moyno pump
Source 6 High pressure pump
Source 7 Grinder
Source 8 High pressure pump to sluicer jet hose

Unshielded Dose Points

Dose Point 1 - Pump Trailer, minimum source
Dose Point 1A - Pump Trailer, average source
Dose Point 1B - Pump Trailer, maximum source
Dose Point 2 - HVAC Trailer, maximum source
Dose Point 3 - Process Water Trailer, maximum source
Dose Point 4 - Edge of Gravel Road, maximum source

Shielded Dose Points

Dose Point 5 – Pump Trailer, 4 in. concrete
Dose Point 6 – Pump Trailer, 8 in. concrete
Dose Point 7 – Pump Trailer, 12 in. concrete

CONCLUSIONS

The total dose rates from the points calculated are not a dose problem when considered in the context of the operations to be conducted and the time frame involved.

The traditional method for shielding an operation like this would be to place the pump skid inside a shielded enclosure, along with shielding the pipelines at the points where they are located. Such shielding should be 8 in. of concrete equivalent around the pump skid, and 4 in. of concrete equivalent around the pipelines. Access control could be maintained in areas greater than 5 mR/h if they are found. Rather than routing the pipelines in the locations shown in Fig. I.1, re-routing of the lines into groups with one set coming from the tank to be sluiced (pump suction to both ends and sluicer at the middle) and another set going to tank T-9 (pump suction and discharge) would allow more compact and less expensive shielding. Shielding of the pipelines could be accomplished with concrete road barriers, set on the ground. These would function as shadow shields, and would not require a top. Shielding of the pump skid would require taller (6 ft) shields which could be stacked solid concrete block, concrete panels, or water tanks. A concrete pad foundation support would be required for these, which could require re-location of the pump trailer. This shielding enclosure would again function as a shadow shield, and would not require a roof.

A case could be made for operating the equipment unshielded, establishing a large radiation area, and limiting personnel access during operation. This is because of the following factors. First, the operation is of limited duration since tanks of this size at other locations (railroad yards) are cleaned in a very short period of time (hours). Although the differences between these operations (pumping out the top of the tank, greater quantity of sludge) could extend the actual sluicing of the tanks beyond this time frame, the operation is still expected to be of short duration (several days to one week per tank). Moving the hoses between the tanks is therefore expected to occur frequently, which would be done on a contact basis. Second, the site is remotely located, with access control easily accomplished. In addition, a favorable topography could lend itself to locating the main control trailer in a low background area while not being a great distance away from the system. Third, maintenance of the system will be on a contact basis in either scheme, and shielding of the system in the manner described would not reduce maintenance personnel doses. Fourth, including adequate water flush points in the piping system will reduce the doses to personnel by allowing the flushing of lines and pumps at the conclusion of sluicing and in the event that equipment failure occurs.

More detailed calculations will be required to support these operating schemes, and a knowledge of the operating and maintenance procedures to enable the study of the operation for estimating the doses to personnel and for establishing a dose budget will be required. This will be required for both the shielded and unshielded methods but a more detailed and involved study will be required for the unshielded case.

RECOMMENDATIONS

1. Estimate the cost of shielding the pump skid and pipelines. Estimate the cost of doing the extra analysis required to support the unshielded method. Compare the cost of the extra analysis to that of providing the shielding.

2. Identify the requirements to meet for using the unshielded method, and pursue approval of the unshielded method with the appropriate safety personnel.

DISTRIBUTION

1. L. V. Asplund
2. C. A. Bednarz
3. H. L. Boston
4. W. D. Brickeen
5. D. G. Cope
6. D. L. Garrett
7. T. B. Hale
8. A. J. Kuhaida, Jr.
9. D. M. Matteo
10. K. A. McPherson

11–12. P. T. Owen

13. S. T. Rudell
14. P. A. Schrandt
15. C. B. Scott
16. A. E. Smith
17. W. T. Thompson
18. M. L. Whitehead
20. Central Research Library
21. ER Document Management Center–RC
22. C. L. Callis, CDM Federal Programs Corporation, 800 Oak Ridge Turnpike, Suite 500, Oak Ridge, Tennessee 37830
23. C. Provost, CDM Federal Programs Corporation, 800 Oak Ridge Turnpike, Suite 500, Oak Ridge, Tennessee 37830