MARTIN MARIETTA ENERGY SYSTEMS LIBRARIES
3 4456 0427095 5

LOCKHEED MARTIN

ORNL/ER-416

ENVIRONMENTAL RESTORATION PROGRAM

Comprehensive Work Plan for the Thorium Storage Well Dismantlement at Oak Ridge National Laboratory, Oak Ridge, Tennessee

OAK RIDGE NATIONAL LABORATORY
CENTRAL RESEARCH LIBRARY
CIRCULATION SECTION
4500N ROOM 175
LIBRARY LOAN COPY
DO NOT TRANSFER TO ANOTHER PERSON.
if you wish someone else to see this report, send in name with report and the library will arrange a loan.
ORNL-118 (6-97)

This document has been approved by the ORNL Technical Information Office for release to the public. Date: 09/04/97

ENERGY SYSTEMS
ER

MANAGED BY
LOCKHEED MARTIN ENERGY SYSTEMS, INC.
FOR THE UNITED STATES
DEPARTMENT OF ENERGY

UCN-17560 (6 8-95)

ORNL/ER-416

Comprehensive Work Plan for the Thorium Storage Well Dismantlement at Oak Ridge National Laboratory, Oak Ridge, Tennessee

Date Issued—September 1997

Prepared for the
U.S. Department of Energy
Office of Environmental Management
under budget and reporting code EW 20

Environmental Management Activities at the
OAK RIDGE NATIONAL LABORATORY
Oak Ridge, Tennessee 37831
managed by
LOCKHEED MARTIN ENERGY SYSTEMS, INC.
for the
U.S. DEPARTMENT OF ENERGY
under contract DE-AC05-84OR21400

MARTIN MARIETTA ENERGY SYSTEMS LIBRARIES
3 4456 0427095 5

APPROVALS

COMPREHENSIVE WORK PLAN FOR THE THORIUM STORAGE WELL DISMANTLEMENT AT THE OAK RIDGE NATIONAL LABORATORY, OAK RIDGE, TENNESSEE

DOCUMENT NUMBER ORNL/ER-416

September 1997

Approved by:

R. L. Chadwick, Field Supervisor	9/4/97 Date
S. L. Laman, Project Manager	9/4/97 Date
S. A. Herron, Program Manager	9/4/97 Date
A. D. Reynolds, Environmental Compliance	9-4-97 Date
M. M. Whitehead, Health and Safety	9-4-97 Date
H. D. Wooten, Facility Manager	9/4/97 Date

PREFACE

The *Comprehensive Work Plan for the Thorium Storage Well Dismantlement at the Oak Ridge National Laboratory, Oak Ridge, Tennessee* was prepared as a summary of activities that need to be performed to dismantle ten thorium storage wells located just east of the Thorium Storage Facility, Building 7019 at the Oak Ridge National Laboratory. This work will be performed under Work Breakdown Structure 1.4.12.6.1.14.01.04.50 (Activity Data Sheet 3300W). This document addresses a limited history of the storage wells, the scope, roles and responsibilities, documentation, training, environmental compliance requirements, and field actions required to dismantle ten thorium storage wells. Per DOE direction, the dismantlement will be conducted as a maintenance action and not as a CERCLA response action under the FFA.

CONTENTS

PREFACE iii

1. INTRODUCTION 1
   1.1 Purpose 1
   1.2 Storage Well History 1
   1.3 Scope 1

2. ROLES AND RESPONSIBILITIES 2

3. DOCUMENTATION 2

4. FIELD ACTIVITIES 3
   4.1 Site Characterization 3
   4.2 Well Dismantlement 3

5. TRAINING AND PERSONNEL PROTECTIVE EQUIPMENT 4

6. ENVIRONMENTAL COMPLIANCE ACTIVITIES 4
   6.1 Waste Disposal 4

APPENDIX A A-1

APPENDIX B B-1

APPENDIX C C-1

1. INTRODUCTION

1.1 PURPOSE

The purpose of this Comprehensive Work Plan is to address a limited history of the storage wells, the scope, roles and responsibilities, documentation, training, environmental compliance requirements and field actions required to dismantle ten thorium storage wells located just east of the Thorium Storage Facility, Building 7019 at the Oak Ridge National Laboratory (ORNL) .

1.2 STORAGE WELL HISTORY

Ten dry storage wells east of the Thorium Storage Facility were constructed in the mid-1960s to provide safe storage for zirconium sponge belonging to the Y-12 plant. The porous zirconium was a potential explosive if it got wet or overheated. At that time, wells were sometimes used as a means of minimizing the danger of storage explosives, since presumably, the explosion could only go up and would cause less horizontal damage. Later, the wells were also used to store thorium. The wells were taken out of service in the mid-1970s.

The cylindrical wells are about 0.9 m (3 ft) in diameter by 3 m (10 ft) deep with heavy-gage, corrugated culvert metal on the outside and an inner metal lining. They are covered with heavy metal lids. The wells are outside the locked fence that surrounds the Thorium Storage Facility.

Outdoor surface gamma exposure rate measurements at the well site performed in 1989, with the exception of one contaminated "hot" spot, surface are representative of typical background values ranging from 6 to12 μR/h. The highest outdoor gamma level (400 μR/h) was identified at a small spot (<1 m^2) on the ground at a metal fence post in the southwest corner. Only one well (No. 5) was found to have removable beta-gamma activity levels above the guidelines for establishing a contamination area. Smear analysis disclosed transferrable beta-gamma activities of 1200 dpm/100 cm^2 in Storage Well 5.

1.3 SCOPE

Per DOE direction, the dismantlement will be conducted as a maintenance action and not a CERCLA response action under the FFA. The scope includes removal of the inner liner, verifying that the casings are not contaminated, excavating around the outer corrugated casing and cutting it at least 1 ft below grade, backfilling the open outer casing with a clay and bentonite mixture to 1 ft below grade, adding topsoil and seeding (See Appendix A for typical well and site layout). The contaminated soil (approximately 4ft^2) in the southwest corner will be excavated and the area backfilled with topsoil and seeded. The clean scrap metal from the well casings will be transported to a clean scrap metal yard at ORNL. The contaminated metal from Well No. 5 and the contaminated soil will be appropriately packaged, put into a B-25 box (or boxes), labeled, and forwarded to Waste Management for disposal.

The task will be complete when all dismantled materials have been removed and cleared areas backfilled and seeded to provide for grass cover. A project completion notification letter will be prepared and issued to document completion activities. It is assumed that DOE will then request a No Further Action/Investigation designation under the FFA.

2. ROLES AND RESPONSIBILITIES

The following participants will be involved in this task with corresponding responsibilities:

- Environmental Restoration Program will provide project management and prepare needed documentation, site sketches, and related information;
- ORNL Office of Environmental Compliance and Documentation (OECD) will provide environmental oversight support;
- Environmental Restoration Waste Certification Officer will coordinate waste disposal and prepare the Waste Management Plan;
- ORNL Radiation Protection will provide Health Physics coverage;
- ORNL Safety and Health Evaluation and Support Team will provide health and safety oversight support and will coordinate Site Safety and Health Officer coverage as warranted;
- ORNL Plant and Equipment forces will perform all excavation, cutting, removal, packaging and transporting of the material (except for the contaminated materials) to a clean scrap yard at ORNL. Additionally, they will backfill and seed upon completion. The contaminated waste will be packaged in a B-25 box and forwarded to Waste Management for disposal.

3. DOCUMENTATION

This project will be performed as a routine maintenance action. No RCRA or CERCLA documentation will be prepared. The following limited project documents will be prepared to cover this task:

- Project Waste Management Plan,
- National Environmental Policy Act Letter,
- Comprehensive Work Plan,
- Davis/Bacon Review,
- Management Assessment,
- Schedule,
- Cost Estimate,
- Site Sketch (contained in Appendix A),
- DOE Authorization Letter,
- Project Completion Notification Letter
- Project Hazard Screening
- Safety Work Permit (SWP)

- Radiological Work Permit (RWP)
- Welding/Burning/Hotwork Permit
- Excavation/Penetration Permit
- QA Concurrence Notification
- QA Evaluation

4. FIELD ACTIVITIES

4.1 SITE CHARACTERIZATION

Radiological surveying and/or radiological sampling will be performed to confirm that site contamination is limited to the inner liner at Well No. 5 and a small spot in the southwest corner at the base of a metal fence post.

4.2 WELL DISMANTLEMENT

- Upon verification that only one well is contaminated, the field crew will excavate around each well to a depth not less than 1 ft below grade to provide sufficient area for cutting the corrugated outer piping.

- Lugs will be welded to or holes will be burned into the inner metal liner (or casings) to provide for attaching a hoisting device.

  NOTE: All hoisting and rigging activities during well dismantlement will be performed as "ordinary" lifts per DOE standard, DOE-STD-1090-96, Hoisting and Rigging, Revision 1, dated September 1996 (See Appendix B).

- A crane, 5 ton minimum, will be attached to extract the inner casings once the existing stabilizing strips are cut. These inner casings will be placed on a sheet of plastic to allow for the performance of a radiological survey and the attachment of an appropriate clearance tag.

  NOTE: The field crew may review the site conditions and elect to cut the corrugated outer piping and extract the above ground portion simultaneously with the inner casing. This action is not viewed as a violation of the work plan.

- The corrugated outer piping will be cut not less than 1 ft below grade using a cutting torch. The upper section of piping will be radiologically surveyed and appropriately tagged.

- The open wells will be backfilled with a clay and bentonite mixture up to the 1 ft below grade level. The last foot will be filled with topsoil. The top 3 feet of backfill will be compacted and seeded.

- Contaminated soil (approximately 4 ft^3) located at the southwest corner of the fence (See Appendix C) will be excavated and replaced with topsoil compacted and seeded.

5. TRAINING AND PERSONAL PROTECTIVE EQUIPMENT

Because of the presence of contamination and the cutting of galvanized piping, it will be necessary to use specially trained personnel to perform the field operations. The following training will be required for this task:

- Radiological Worker II,
- General Employee Training,
- Medical Evaluation,
- Respirator Fit Test, and
- Bioassay (whole body count and urinalysis).

The following personal protective equipment may be required for field operations involving suspect contamination conditions if directed by Health and Safety personnel:

- Cotton or TYVEK coveralls,
- Rubber or cotton gloves,
- Steel-toed work boots,
- Hard hats and safety glasses, and
- Respirator with GMCH filter.

Only hard hats, steel-toed work boots, and safety glasses will be required for normal nonhazardous field operations.

6. ENVIRONMENTAL COMPLIANCE ACTIVITIES

6.1 WASTE DISPOSAL

Solid waste generated during site activities will be handled in accordance with the approved Project Waste Management Plan. As a general rule, the following guidelines will be followed:

- The "green tagged" metal will be hauled to a clean scrap metal yard. The contaminated inner casing will be cut up as required and placed in a B-25 box. Also, the contaminated soil will be placed in a B-25 box. Any additional required radiological testing or sampling will be performed and the contaminated waste will be forwarded to Waste Management for disposal.

- Other contaminated waste such as personal protective equipment and wipes will be segregated, placed into appropriate containers and properly disposed of by Waste Management personnel.

A spill kit will be available at the job site to address potential spills.

APPENDIX A
RESULTS OF RADIOLOGICAL SURVEY AT THORIUM STORAGE FACILITY (7019)

ORNL/RAP/LTR-89/7

OAK RIDGE
NATIONAL
LABORATORY

MARTIN MARIETTA

Results of Outdoor Radiological Walkover Surveys at the Tritium Target Fabrication Facility (7025), Thorium Storage Facility (7019), Closed Contractors' Landfill (7658), and Process Waste Basin (7711) Sites

J. K. Williams
M. S. Uziel
J. L. Quillen

CAUTION

This document has not been given final patent clearance and is for internal use only. If this document is to be given public release, it must be cleared through the site Technical Information Office which will see that the proper patent and technical information reviews are completed in accordance with Energy Systems Policy.

OPERATED BY
MARTIN MARIETTA ENERGY SYSTEMS, INC.
FOR THE UNITED STATES
DEPARTMENT OF ENERGY

ABSTRACT

Surface radiological walkover surveys were conducted at the Tritium Target Fabrication Facility (7025), Thorium Storage Facility (7019), Closed Contractors' Landfill (7658), and Process Waste Basin (7711) during January and May of 1989. The surveys were completed by the Measurement Applications and Development Group of the Health and Safety Research Division (HASRD) of the Oak Ridge National Laboratory (ORNL). The purpose of the surveys was to identify surface contamination by on-site radiation measurements and analyses of soil samples.

Survey results showed no evidence of detectable surface radioactivity above typical Oak Ridge Reservation background levels at the Closed Contractors' Landfill and the Process Waste Basin. At the Tritium Target Fabrication Facility site, soil samples contained 20 to 130 times the amount of tritium found in background samples from the Walker Branch Watershed. At the Thorium Storage Facility site, one small (<1 m^2) area had gamma levels of 400 μR/h and ^{232}Th concentrations of 950 pCi/g at soil depths of 0 to 15 cm. Recommendations are included.

Since the TTFF is an active, operational facility, on-site tritium concentrations (i.e., atmospheric, soil, soil water) are subject to significant fluctuations. Therefore, the survey data presented in this report represent a "snapshot" assessment on the date of the survey.

THORIUM STORAGE FACILITY (7019)

History of the Site

The Thorium Storage Facility (7019) was constructed in the early 1960s[10] for storage of normal uranium, depleted uranium, ^{6}Li, ^{232}Th, and other source materials with exposure rates less than 10 mR/h.[11] The facility retains its original name although all stored nuclear materials were removed from the building in August 1984.[11] Currently, the building contains shipping containers for radioactive material and equipment, such as a drum handler and a hydraulic lift, to move the containers. The building also houses discarded security cabinets, radioisotope vaults, filing cabinets, and other former storage containers that no longer meet General Services Administration (GSA) approval standards for classified material storage.[11]

The building has metal sides and a steel frame and sits on a concrete slab (Fig. 5). Gross floor area is about 89 m^2 (960 ft^2).[12] The building was never environmentally controlled. Around 1980, the bottom of a storage drum rotted and contamination spilled in a small spot on the concrete floor. After cleanup, the area was painted to cover residual contamination.[11] Elevated exposure rates are still evident at this spot.

The building is surrounded by a fence with a locked gate; the entrance door to the building is also locked. Keys controlled by Laboratory Protection Division personnel and Plant and Equipment Division personnel strictly limit access to the area.[11]

Ten dry storage wells (Fig. 6) east of the Thorium Storage Facility were constructed in the mid-1960s to provide safe storage for zirconium sponge belonging to the Y-12 plant. The porous zirconium was a potential explosive if it got wet or overheated. At that time, wells were sometimes used as a means of minimizing the danger of storing explosives, since presumably, the explosion could only go up and would cause less horizontal damage. Later, the wells were also used to store thorium. The wells were taken out of service in the mid-1970s.[10]

The cylindrical wells are about 0.9 m (3 ft) in diameter by 3 m (10 ft) deep with heavy-gage, corrugated culvert metal on the outside and an inner metal lining. They are covered with heavy metal lids (Fig. 7). Some of these lids are fastened with security seals and others can be opened. The wells are outside the locked fence that surrounds the Thorium Storage Facility.

Discussion of Survey Results

Outdoor surface gamma exposure rate measurements at the Thorium Storage Facility site are shown in Fig. 8. With the exception of one contaminated "hot" spot, surface gamma levels are representative of typical background values ranging from 6 to 12 μR/h. The highest outdoor gamma level (400 μR/h) was identified at a small spot (<1 m^2) on the ground at a metal fence post ~35 ft east of Building 7019.

ORNL-PHOTO 4608-89

Fig. 5. View looking east at the Thorium Storage Facility (7019) site (September 1989).

ORNL-PHOTO 3039-89

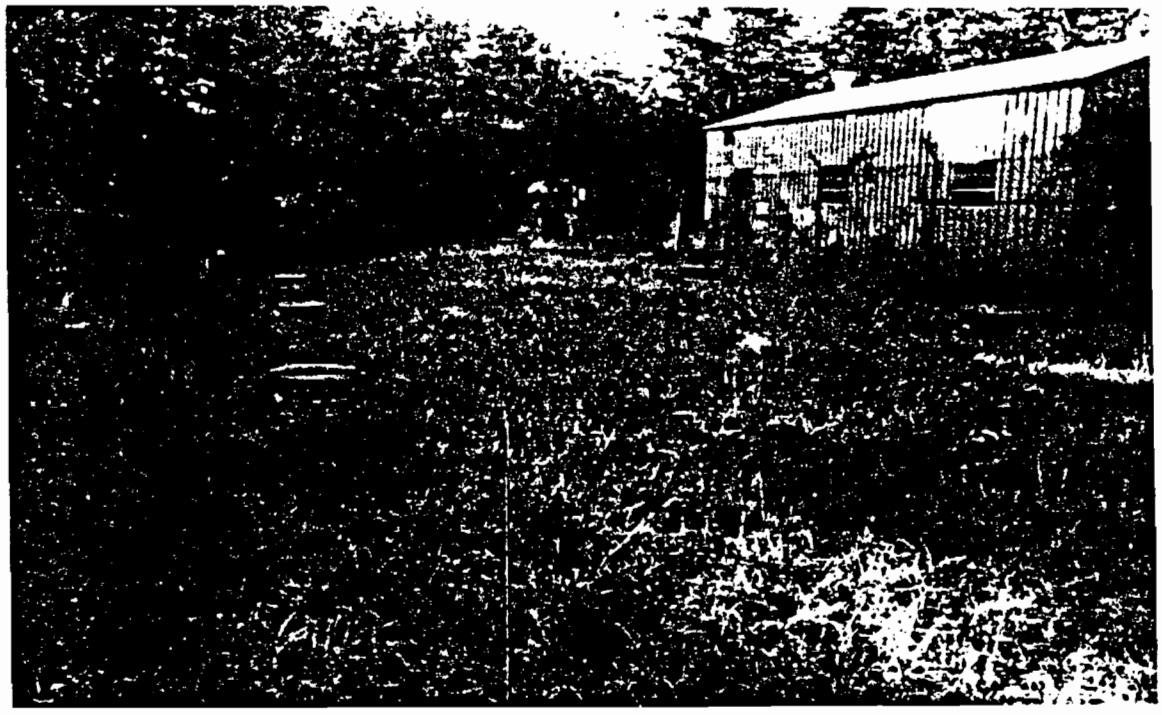

Fig. 6. Dry storage wells at the Thorium Storage Facility site (September 1989).

ORNL-PHOTO 3040-89

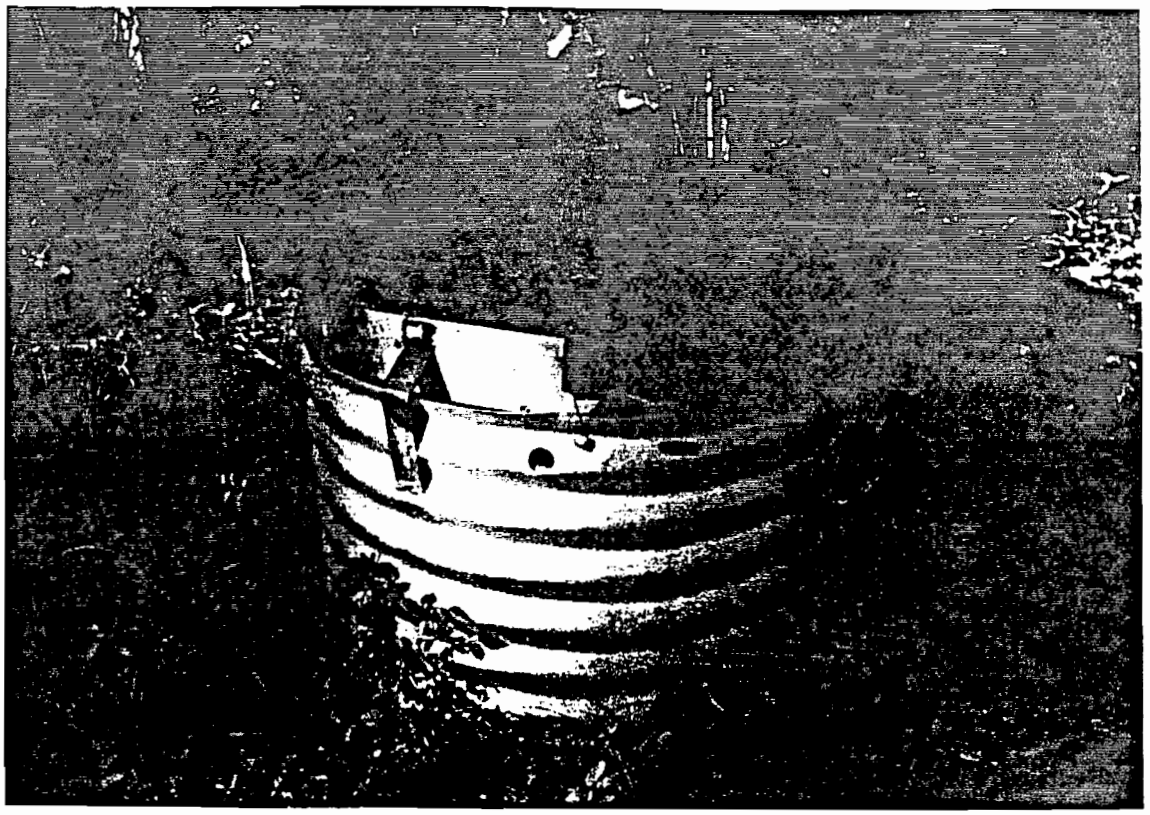

Fig. 7. A dry storage well at the Thorium Storage Facility site (September 1989).

Results of radionuclide analysis of two soil samples taken at the spot show ^{232}Th concentrations of 950 and 390 pCi/g in surface (0-15 cm) and subsurface (15-30 cm) samples, respectively (see Table 3). This residual contamination may be the result of improper disposal of rinsate used in the decontamination process of a previously reported ^{232}Th spill in Building 7019. If DOE "hot spot" guidelines[13] were applicable for this site, the maximum surface ^{232}Th concentration (950 pCi/g) would exceed the guideline value (50 pCi/g) for "hot spots" <1 m^2 by a factor of 19.

Gamma exposure rate measurements taken inside each well ranged from 4 to 10 μR/h (see Table 4). Smears were also obtained from selected locations inside the wells and analyzed for removable alpha and/or beta-gamma contamination. In general, the wells were found to be free of significant alpha contamination. Only one well was found to have removable beta-gamma activity levels in excess of the ORNL health physics guideline limit of 1000 dpm/100 cm^2 for establishing a Contamination Area. Analysis of smears disclosed transferable beta-gamma activities of 1200 dpm/100 cm^2 in Storage Well 5.

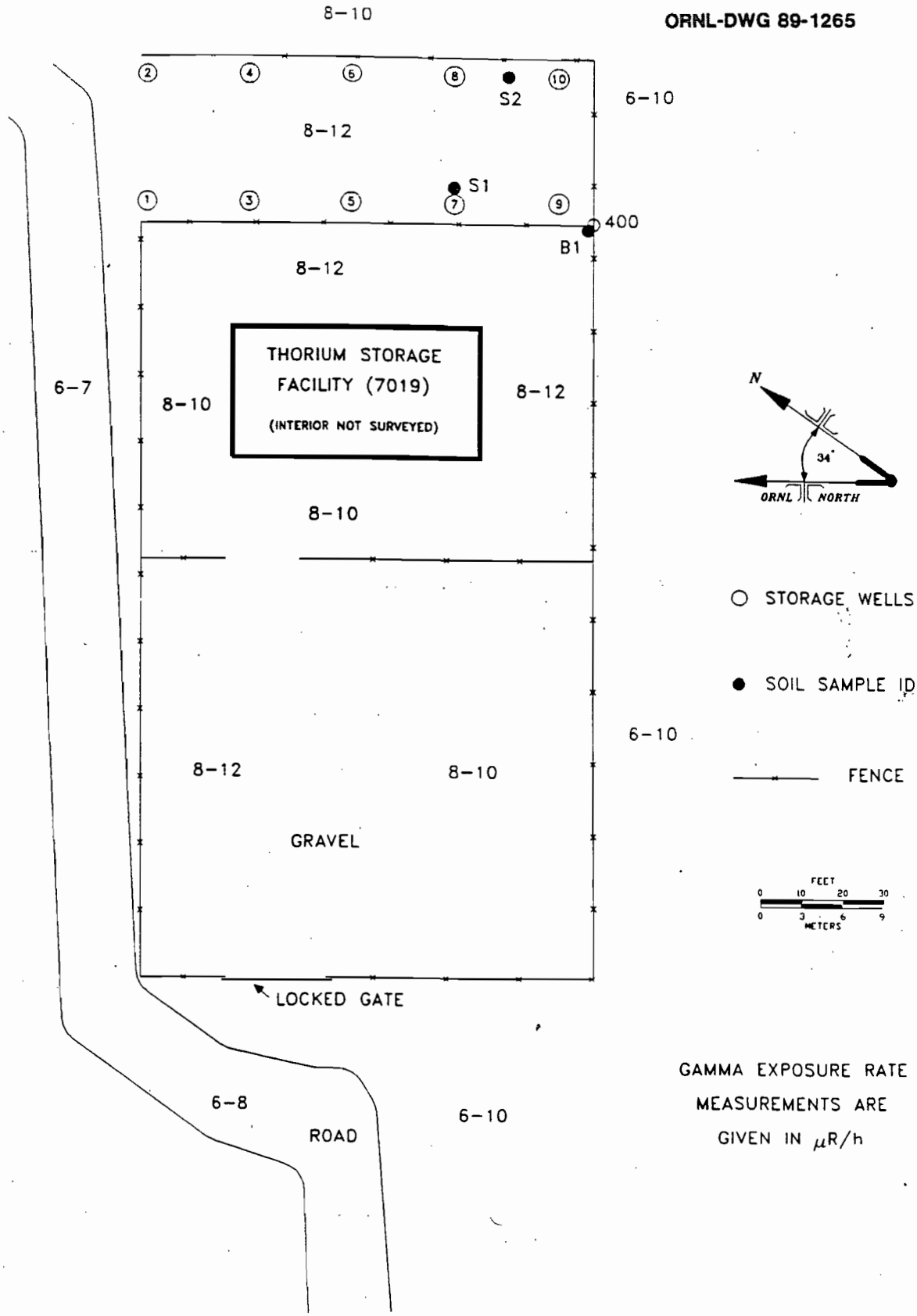

Fig. 8. Diagram showing results of outdoor gamma exposure rate measurements and locations of soil samples taken at the Thorium Storage Facility site. The dry storage wells located east of Building 7019 are numbered 1 to 10.

Table 3. Concentrations of ^{238}U, ^{232}Th, and ^{226}Ra in soil samples taken from the Thorium Storage Facility (7019) site

Sample ID[a]	Depth (cm)	Radionuclide concentration in pCi/g (dry wt)		
		^{238}U[b]	^{232}Th	^{226}Ra
B1A	0-15	<57.00	950.00 ± 5.0	2.70 ± 1.0
B1B	15-30	<24.00	390.00 ± 2.0	1.70 ± 0.3
S1	0-15	<0.77	0.32 ± 0.02	0.35 ± 0.02
S2	0-15	1.40 ± 1.0	1.30 ± 0.07	1.00 ± 0.03

[a]Locations of soil sample hole numbers are shown on Fig. 8.
[b]Background levels of ^{238}U in the main ORNL complex usually range from 0.027 to 0.54 pCi/g (dry wt) (see ref. 8).

Table 4. Gamma exposure rates and alpha and beta-gamma activity levels measured on the interior surfaces of the storage wells at the Thorium Storage Facility (7019) site

Well number[b]	Gamma exposure rates[a] (μR/h)	Transferable contamination	
		Alpha (dpm/100 cm^2)[c]	Beta-gamma (dpm/100 cm^2)[c]
1	4-10	d	d
2	4-8	6	d
3	4-8	d	d
4	4-8	d	d
5	4-8	6	1200
6	4-7	d	d
7	4-6	15	170
8	4-8	15	d
9	4-7	6	d
10	4-6	6	d

[a]Gamma radiation was measured with a NaI scintillation probe connected to a portable scaler.
[b]Locations of well numbers are shown on Fig. 8.
[c]Disintegrations per minute per 100 cm^2.
[d]Background.

APPENDIX B
EXCERPTS FROM DOE STANDARD (DOE-STD-1090-96)
HOISTING AND RIGGING

TS

INCH-POUND

DOE-STD-1090-96
Revision 1
September 1996
Supercedes
DOE-HDBK-1090-95
June 1995

DOE STANDARD

HOISTING AND RIGGING
(Formerly Hoisting and Rigging Manual)

U.S. Department of Energy
Washington, D.C. 20585

AREA SAFT

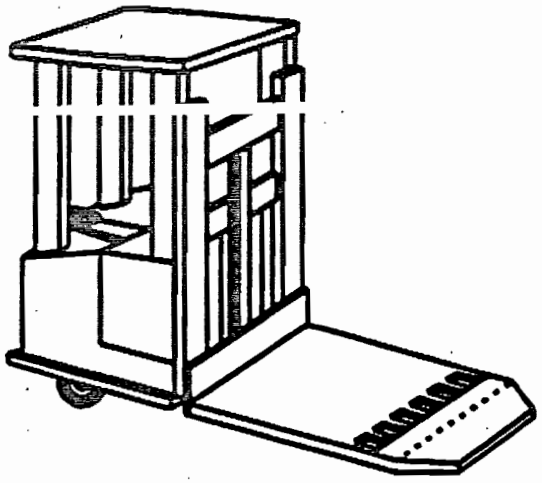

Figure 1-3. High-lift truck, high-lift platform truck.

HOLDING LINE: Wire rope on a clamshell or orange-peel bucket that holds the bucket while the closing line is released to dump the load.

HOOK LOAD: The total live weight supported by the hook of a crane, derrick, or other hoisting equipment, including the load, slings, spreader bars, and other tackle not part of the load but supported by the hook and required for the handling of the load.

IDLER: Sheave or roller used to guide or support a rope.

INDEPENDENT WIRE-ROPE CORE: Wire rope used as the core of a larger rope.

INNER WIRES: All wires of a strand except surface or cover wires.

INTERNAL-COMBUSTION ENGINE TRUCK: A truck in which the power source is a gas or diesel engine.

INTERNALLY LUBRICATED: Wire rope or strand having all wires coated with lubricant.

KINK: Permanent distortion of wires and strands resulting from sharp bends.

LAGGING: External wood covering on a reel of rope or a strand.

LANG-LAY ROPE: Wire rope in which the wires in the strands and the strands in the rope are laid in the same direction.

LAY LENGTH: The lengthwise distance on a wire rope in which a strand makes one complete turn around the rope's axis (see Figure 1-4).

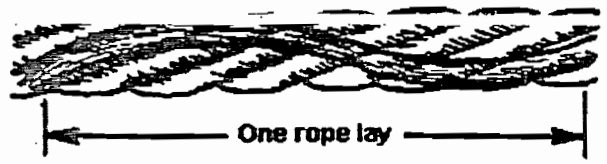

Figure 1-4. Rope lay.

Left Lay:

- **Strand:** Strand in which the cover wires are laid in a helix having a left-hand pitch, similar to a left-hand screw.
- **Rope:** Rope in which the strands are laid in a helix having a left-hand pitch, similar to a left-hand screw.

Right Lay:

- **Strand:** Strand in which the cover wires are laid in a helix having a right-hand pitch, similar to a right-hand screw.
- **Rope:** Rope in which the strands are laid in a helix having a right-hand pitch, similar to a right-hand screw.

LIFT:

- Maximum safe vertical distance through which a hook can travel.
- The hoisting of a load.

LIFT, CRITICAL: Lifting of parts, components, assemblies, or other items designated as critical because the effect of dropping, upset, or collision of them could:

- Present a potentially unacceptable risk of personnel injury or property damage.
- Result in significant release of radioactivity or other undesirable conditions
- Cause undetectable damage resulting in future operational or safety problems
- Cause significant work delay

LIFT, ORDINARY: Any lift not designated as a critical lift or a preengineered production lift.

LIFT, PREENGINEERED PRODUCTION: Repetitive, production-type lifting operation, independent of the nature of the load to be lifted, in which the probability of dropping, upset, or collision is reduced to a level acceptable to the responsible manager by preliminary engineering evaluation, specialized lifting fixtures, detailed procedures, operation-specific training, and independent review and approval of the entire process.

LINE: A rope used for supporting and controlling a suspended load.

LOAD: The total weight superimposed on the load block or hook.

LOAD BLOCK: The assembly of hook or shackle, swivel, bearing, sheaves, pins, and frame suspended by the hoisting ropes.

LOAD-BACKREST EXTENSION: A device extending vertically from the fork carriage frame.

LOAD-BEARING PARTS: Any part of a material-handling device in which the induced stress is influenced by the hook load. *A primary* load-bearing part is a part the failure of which could result in dropping, upset, or uncontrolled motion of the load. Load-bearing parts which, if failed, would result in no more than stoppage of the equipment without causing dropping, upset, or loss of control of the load are not considered to be primary load-bearing parts.

LOAD CENTER (FORKLIFTS): The horizontal longitudinal distance from the intersection of the horizontal load-carrying surfaces and vertical load-engaging faces of the forks (or equivalent load-positioning structure) to the center of gravity of the load.

LOW-LIFT TRUCK: A self-loading truck equipped with an elevating mechanism designed to raise the load only sufficiently to permit horizontal movement (see Figure 1-5).

MAGNET: An electromagnetic device carried on a crane hook and used to pick up loads.

MAIN HOIST: The hoist mechanism provided for lifting the maximum-rated load.

MAN TROLLEY: A trolley having an operator's cab attached to it.

MARLINE SPIKE: Tapered steel pin used in splicing wire rope.

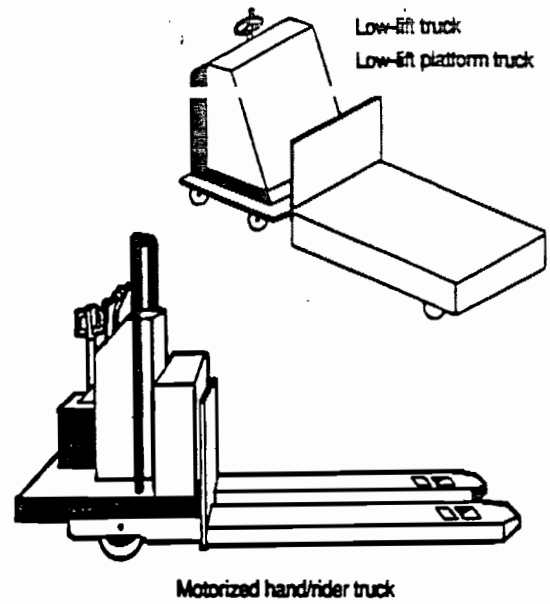

Figure 1-5. Low-lift trucks.

MESSENGER STRAND: Galvanized strand or bronze strand used to support telephone and electrical cables.

MODULUS OF ELASTICITY: Mathematical quantity giving the ratio, within the elastic limit, between a definite range of unit stress on a wire rope and the corresponding elongation.

MOUSING: A method of bridging the throat opening of a hook to prevent the release of load lines and slings, under service or slack conditions, by wrapping with soft wire, rope, heavy tape, or similar materials.

NARROW-AISLE TRUCK: A self-loading truck intended primarily for right-angle stacking in aisles narrower than those normally required by counterbalanced trucks of the same capacity (see Figure 1-6).

NONDESTRUCTIVE EXAMINATION (NDE): The development and application of technical methods to examine materials or components, in ways that do not impair future usefulness and serviceability, in order to detect, locate, measure, and evaluate discontinuities, defects, and other imperfections; to assess integrity, properties, and composition; and to measure geometrical characteristics.

NONDESTRUCTIVE TESTING (NDT): See NONDESTRUCTIVE EXAMINATION.

9.5 OPERATION

a. The following shall apply to all personnel involved in mobile crane operation.

b. At the initial stage of the planning process, an appointed person shall classify each lift into one of the DOE-specified lift categories (ordinary, critical, or preengineered production).

9.5.1 Conduct of Operator

a. Do not engage in any practice that will divert your attention while operating the crane.

b. Do not operate the crane if you do not meet the requirements contained in Chapter 6 or if you are experiencing a condition resulting in reduced physical or mental capabilities.

c. Keep the operating area free of water, snow, ice, oil, and debris that could cause your hands or feet to slip from the controls.

d. Keep the operating cab windshields clean and free of anything that obstructs vision. Replace broken windows.

e. Ensure proper functioning of tires, horn, lights, battery, controller, lift system (including load-engaging means, chains, hoist rope, and limit switches), brakes, and steering mechanisms. If at any time a lifting device is found to be in need of repair, is defective, or is in any way unsafe, report it immediately to the designated authority and take the unit out of service until it has been restored to safe-operating condition or a determination has been made by the responsible manager that the deficiency will not adversely affect the safe operation of the unit.

f. When two or more cranes are used to lift one load, one designated person shall be responsible for the operation. That person shall analyze the operation and instruct all personnel involved in the proper positioning, rigging of the load, and the movements to be made. That person shall also determine the necessity to reduce crane ratings, position of load, boom location, ground support, and speed of movement.

g. Determine that no one is working on the crane or is close to it before starting the engine or beginning to operate the crane.

h. Barricade accessible areas within the swing radius of the rear of the rotating superstructure of the crane to prevent anyone from being struck or crushed by the crane.

i. Do not hoist two or more separately rigged loads in one lift, even though the combined load is within the crane's rated capacity.

j. When fueling the crane, stop the engine(s) and ensure that smoking or open flames are not permitted within 25 ft of the fueling area.

k. Ensure that a 10BC or larger fire extinguisher is installed at all operator stations. Fire extinguishers shall be maintained in a serviceable condition.

l. Do not store gasoline, acids, caustics, or cleaning solvents that emit toxic fumes in operating cabs. Store fuel in safety cans in safe locations.

m. Ensure that alternate egress routes are not locked on mobile units with operating enclosures.

n. Position the crane on a solid and level footing. It may be necessary in certain situations to use heavy timber mats to build a good working foundation.

o. When swinging the crane, watch out for centrifugal force. Swing the crane slowly to avoid an outward swing of the load. Attach a tag-line to the load if necessary to control the swing.

p. Watch for boom kickback. Never operate with the boom at a higher angle than shown on the capacity charts.

q. Use extreme caution when operating the crane near workers in elevated areas.

r. Use power lowering when lowering loads. When lowering heavy loads, keep the hoist brake as reserve. Use a safety pawl on the boom-hoist drum when not lowering.

s. Avoid two-blocking, caused when the hook block makes contact with boom-point sheaves. A continuing pull on the hoist lines can break the rope or pull the boom back over the cab on some types of booms. On hydraulically telescoping booms, be sure to play out the hoist line when extending and spool in the hoist line when retracting.

t. Lock carrier air brakes ON when operating, and check the pressure of the air brakes frequently.

u. Watch out for the carrier-cab on truck-mounted units when swinging the boom. Keep boom high enough to swing clear of cab.

9.5.1.1 Traveling the Machine

When traveling the machine:

a. Secure the boom and hook block.

b. Check bridges before crossing; make sure they will support the weight of the machine.

c. Check river depths before fording.

d. Check clearances under overpasses, overhead lines, or any overhead obstruction; when side clearances are tight, install a barrier or post a lookout, and make certain there is sufficient clearance for tail swing.

e. When traveling with a load, snub the load to prevent swaying if possible; never travel with near-capacity loads.

f. Never travel a rubber-tired unit with a load over the side.

g. On soft surfaces, always move with the load behind; it helps to raise the leading end of the crawlers and makes traveling safer.

h. Always set swing brakes when the unit is idle or holding loads for a period of time, especially on slopes; if swinging during travel is necessary, engage swing-jaw clutch before releasing brakes.

i. Never back up until it is determined that everyone is clear of the machine.

j. Position the boom in the direction of travel for long moves.

k. Block treads when moving uphill; be sure they are blocked to prevent downhill movement before shifting steering clutches.

l. Lock the turntable before traveling on a highway. Use a house lock or swing brake, and lower boom into the rack to prevent swing.

m. When loading machine on the trailer, always use a ramp; if a ramp is not available, use blocking to build one.

9.5.1.2 Making Adjustments or Repairs

a. When making adjustments or repairs:

1. Stop the machine.

2. Lower the boom or secure it against dropping.

3. Neutralize all controls.

4. Lock starter and remove ignition key to make the machine inoperative.

5. Display proper warning signs on controls of machine.

6. Keep hands, feet, and clothing away from gears, ropes, drums, and sheaves.

7. Never put hands on wire rope when climbing to the top of the cab.

8. Use a bar or stick to guide wire rope onto drums.

9. Keep hands well away from the fan drive while engine is running.

10. Safeguard the crane oiler; do not resume operation until a positive ALL CLEAR signal has been given.

11. Replace all guards and shields before resuming operation.

b. Place blocking or other adequate supports under the boom before beginning boom disassembly operations. Never stand under or on the boom during this work.

c. Before disconnecting oil lines, if machine has hydraulic controls, be sure to place boom on the ground or in the boom rest; then move the pedals and control levers to equalize pressures within the cylinders. Always release any air supercharge on the hydraulic reservoir and shut off the engine (or declutch pumps) before disconnecting oil lines.

d. Do not reach into hydraulic-boom holes unless the sections are securely anchored together.

9.5.1.3 Ensuring Stability

a. Know the rated capacity of the crane and the weight of the load. A safe lift depends on many factors including boom length, boom angle, and

load radius. Follow these requirements to avoid buckling the boom or tipping:

1. [illegible] is measured from center of rotation, not from the boom foot pin.

2. Always operate within the rated capacity of the machine.

3. The gross capacity includes weight of hook, block, and any material-handling devices, (i.e., slings, concrete bucket, magnet lifter, etc.); subtract the weight of all these to find the true weight (net capacity) the crane can handle safely.

4. Ratings are based on operating the machine on firm, level ground; outriggers should be properly extended and lowered before operation.

5. Avoid fast swings, hoists, or sudden braking; these can cause overloads.

6. Do not handle large, heavy loads in strong winds; the wind can catch the load and create an unstable condition.

b. Test stability before lifting heavy loads. Check outrigger footing. Lift load slightly off the ground and stop. Check the machine for movement and check to be sure the brakes hold with the load elevated.

c. Never use machine stability to determine capacity.

d. If there are any indications of tipping, the machine is already overloaded for that working radius.

e. Do not back crane away from the load while carrying a maximum load; this may cause the crane to tip.

f. Always use outriggers when making lifts (with pick-and-carry units), and never lift a load forward of the front outriggers, unless allowed on manufacturer's load chart.

g. Lower outrigger jacks until the tires clear the ground, and level the unit to reach the machine's full capacity. Recheck and, if necessary, reset outriggers between heavy lifts.

h. Always fully extend outrigger beams unless otherwise specified on the manufacturer's load charts for the crane.

9.5.1.4 Observing Boom-Length Precautions

a. Always use the shortest boom possible.

b. Make only vertical lifts; never pull the load sideways.

c. Keep speed slow in lifting and lowering loads.

d. Swing carefully and slowly, and avoid boom or jib "whipping"; check counterbalance clearance.

e. Do not let the load strike the boom or outriggers.

f. Allow maximum clearance between the hook block and boom-point sheaves.

g. Keep near-capacity loads as close to the ground as possible.

h. Avoid hitting anything with the boom; an engineering analysis shall be made before putting the crane back in service if this occurs.

9.5.2 Operating Near Power Lines and Transmitter Towers

It is recognized that operating mobile cranes where they can become electrified from electric power lines is an extremely hazardous practice. It is advisable to perform the work so there is no possibility of the crane, load line, or load becoming a conductive path, (Figure 9-2).

The following steps shall be taken to minimize the hazard of electrocution or serious injury as a result of contact between the energized power lines and the crane, load line, or load:

a. The (electric) Power Marketing Administrations in DOE may deviate from the requirements of Table 9-3, providing the work is done according to line management-approved procedures that do not conflict with statutory regulations or approved variances from these regulations.

b. Any overhead wire shall be considered to be an energized line unless and until the person owning the line or the electrical utility authorities indicate that it is not an energized line.

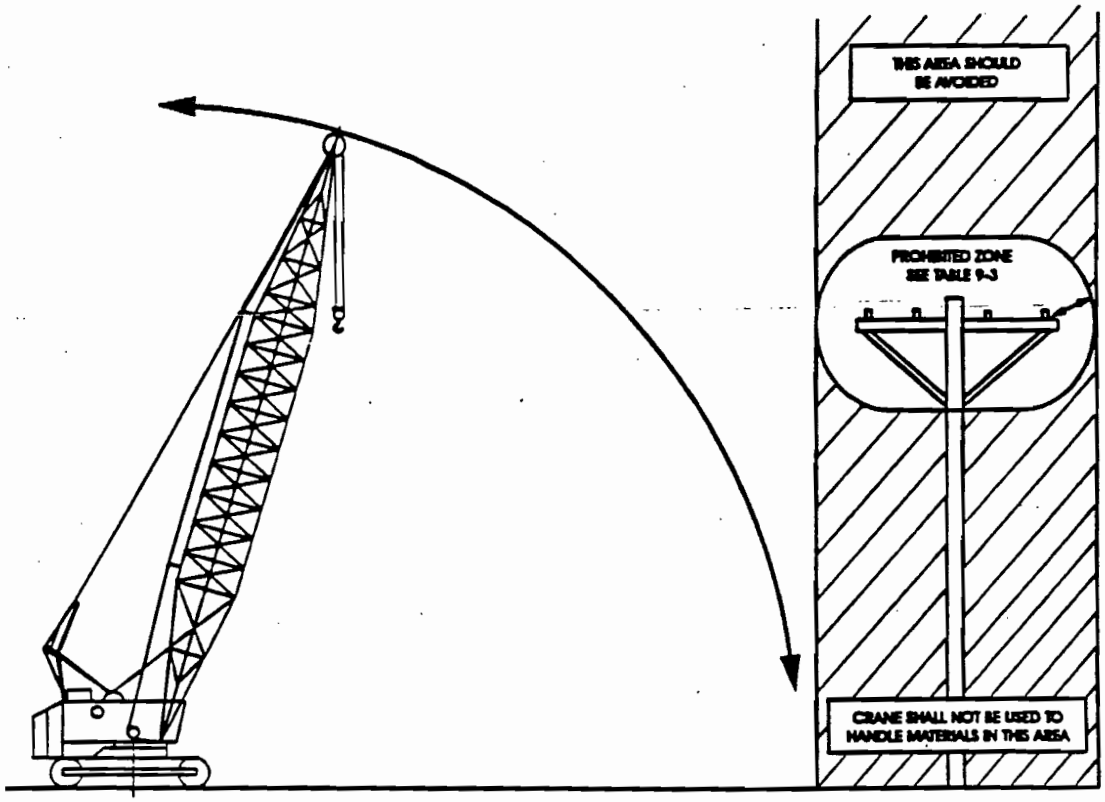

Figure 9-2. Danger zone for cranes and lifted loads operating near electrical transmission line

Table 9-3. Safe working distance from power lines.

a. When operating near high-voltage power lines:

Normal voltage (phase to phase)				Minimum required clearance
		to	50 kV	10 ft (3.1 m)
Over	50	to	200 kV	15 ft (4.6 m)
Over	200	to	350 kV	20 ft (6.1 m)
Over	350	to	500 kV	25 ft (7.6 m)
Over	500	to	750 kV	35 ft (10.7 m)
Over	750	to	1000 kV	45 ft (13.7 m)

b. While in transit with no load and boom or mast lowered:

Normal voltage (phase to phase)				Minimum required clearance
		to	0.75 kV	4 ft (1.2 m)
Over	0.75	to	50 kV	6 ft (1.3 m)
Over	50	to	345 kV	10 ft (3.5 m)
Over	345	to	700 kV	16 ft (4.9 m)
Over	750	to	1000 kV	20 ft (6.1 m)

c. Durable signs shall be installed at the operator's station and on the outside of the crane, warning that electrocution or serious bodily injury may occur unless a minimum clearance of 10 ft (3.1 m) is maintained between the crane or the load being handled and energized power lines. Greater clearances are required because of higher voltage as stated in Table 9-3. These signs shall be revised but not removed when a local jurisdiction requires greater clearances.

d. Exercise caution when working near overhead lines having long spans as they tend to move laterally or vertically due to the wind, which could cause them to breach the safety zone.

e. Cranes shall not be used to handle materials stored under electric power lines unless any combination of the boom, load, load line, or machine component cannot enter the prohibited zone.

f. Crane operators shall not rely on the coverings of wires for their protection.

9.5.2.1 Crane Operation Near De-energized and Grounded Electric Power Lines

This is the preferred condition under which the operation can be performed safely. The hazard of injury or death due to electrocution has been remove. The following steps shall be taken to assure de-energization of the power lines has occurred:

a. The power company or owner of the power lines shall de-energize the lines.

b. The lines shall be visibly grounded to avoid electrical feedback and appropriately marked at the job-site location.

c. A qualified representative of the owner of the lines or a designated representative of the electrical utility shall be on site to verify that steps (a) and (b) have been completed and that the lines are not energized.

9.5.2.2 Power Lines Energized, Crane Operating Less than Erected/Fully Extended Boom Length away from the Prohibited Zone (see Figure 9-3)

a. An on-site meeting between project management and a qualified representative of the owner of the lines or a designated representative of the electrical utility shall take place to establish the procedures to safely complete the operations.

b. The specified clearance between the power lines and the crane, load line, and load shall be maintained at all times as specified in Table 9-3.

c. Load control, when required, shall utilize tag lines of a non-conductive type.

d. A designated signaler, whose sole responsibility is to verify that the required clearance is maintained shall be in constant contact with the crane operator.

e. No one shall be permitted to touch the crane or the load unless the designated signaler indicates it is safe to do so.

f. Operation of boom and load over electric power lines is extremely dangerous, due to perception of distance and multiple contact points as viewed from the position of the operator and /or position of the designated signaler. The operator should avoid operating the crane, with or without a load, in this area.

g. The horizontal and vertical distance of movement of long span lines due to the wind shall be added to the minimum clearance distance as specified in Table 9-3. A qualified representative of the the owner of the lines or a designated representative of the electrical utility shall be consulted for specific distances.

h. Devices such as ribbons, balls, etc., should be attached by a qualified person to the power lines to improve visibility, or equivalent means employed to aid in location of the prohibited zone.

9.5.2.3 Crane Operations are Within the Prohibited Zone and the Power Lines are Energized

a. Before such operations take place, a qualified person together with a qualified representative of the utility or an engineer qualified in power line transmission shall, after visiting the site, determine if this is the most feasible way to complete the operation, and set minimum required clearances and procedures for safe operations. These operations shall be under their supervision.

The following guidelines should be required:

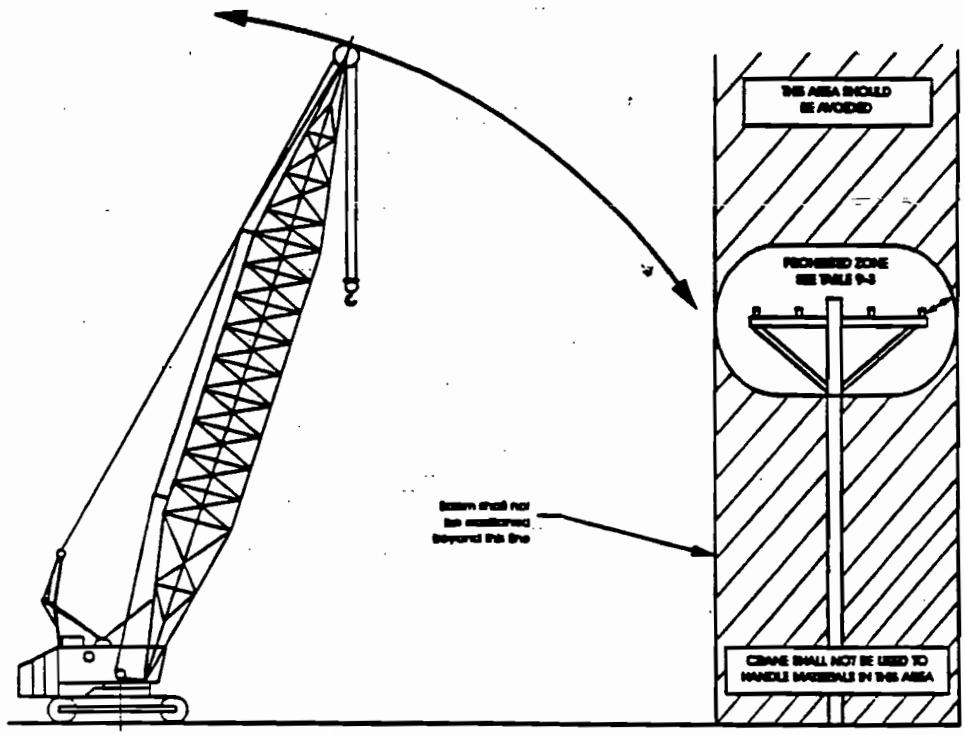

Figure 9-3. Danger zone for cranes and lifted loads operating near electrical transmission line.

1. Crane/load grounded to a neutral line by the utility.

2. Electrical system protective devices that automatically re-energize the circuit after a power line contact occurrence should be blocked or disengaged to inhibit this function.

3. Insulated barriers, which are not a part of nor an attachment to the crane and which will not allow contact between the energized electric power lines and the crane, load lines, or load.

4. Non-conductive barricades to restrict access to the crane work area.

b. Load control, when required, shall utilize tag lines of a non-conductive type.

c. A designated signaler, whose sole responsibility is to verify that the clearances established are maintained, shall be in constant contact with the crane operator.

d. The person responsible for the operation shall alert and warn the crane operator and all persons working around or near the crane about hazard of electrocution or serious injury and instruct them on how to avoid the hazard.

e. All non-essential personnel shall be removed from the crane work area.

f. No one shall be permitted to touch the crane or the load unless the signaler indicates it is safe to do so.

9.5.2.4 Crane in Transit With No Load and Boom Lowered (see Figure 9-4)

a. Cranes in transit with no load and boom lowered shall maintain clearance as specified in Table 9-3.

b. A designated signaler shall be assigned to observe the clearance and give warning before the crane approaches the above limits.

c. When planning transit of the crane, the effect of speed and terrain on the boom and crane movement shall be considered.

9.5.2.5 Crane Operation Near Transmitter Towers (see Figure 9-5)

a. Prior to work near transmitter towers where an electrical charge can be induced in the equipment or materials being handled, the transmitter shall be deenergized or tests shall be made to determine if electrical charge is induced on the crane. The following precautions shall be taken when necessary to dissipate induced voltages:

1. The equipment shall be provided with an electrical ground directly to the upper rotating structure supporting the boom.

2. Ground jumper cables shall be attached to materials being handled by boom equipment when electrical charge is induced while working near energized transmitters; crews shall be provided with nonconductive poles having large alligator clips or other similar protection to attach the ground cable to the load.

3. Combustible and flammable materials shall be removed from the immediate area prior to operations.

9.5.3 Hoist-Limit Switch

Check all limit switches, if supplied, without a load on the hook at the beginning of each work shift or the first time the crane is used that shift. Inch each motion into its limit switch to ensure that two-blocking does not occur during the test. If a lift is in progress during a shift change, this testing requirement is considered to have been satisfied for the completion of that lift. However, test the limit switch again before the next lift.

9.5.4 Standard Hand Signals

The standard hand signals for DOE use shall be as specified in the latest edition of the ASME B30 standards for the particular type of crane or hoist being used (see Figure 9-6).

9.5.5 Identification of Signalers

a. All personnel acting as signalers during crane operations shall be clearly identified to the crane operator by the use of the following (one or more, as required by the responsible manager): orange hardhat, orange gloves, and orange vest. This requirement may be waived by the responsible manager when the lift is very closely controlled or personnel are required to wear special clothing for protection from a hazardous environment.

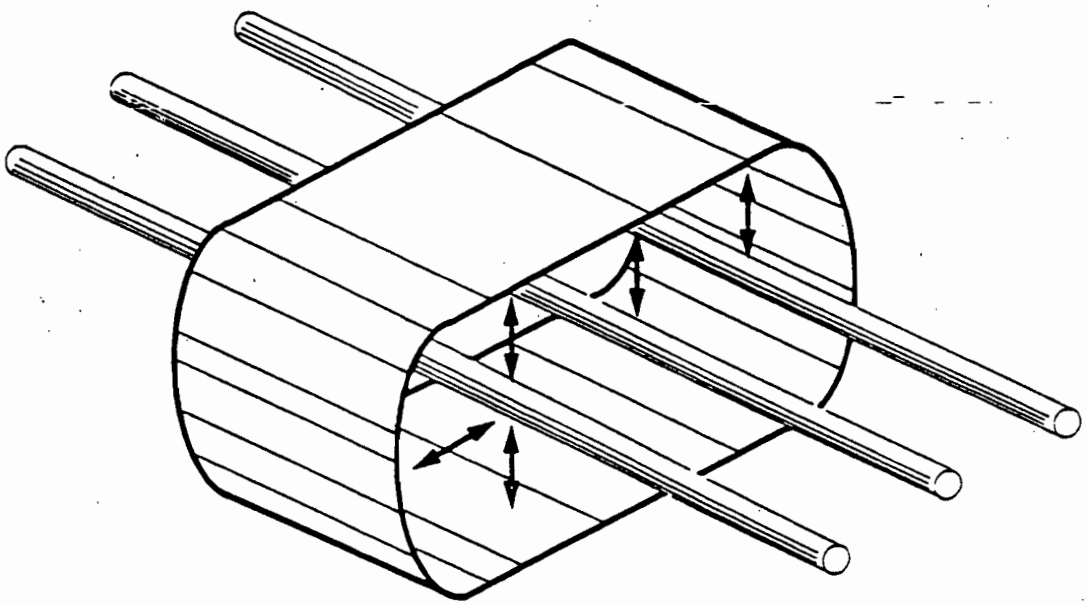

Figure 9-4. Danger zone for cranes and lifted loads operating near electrical transmission line.
(See Table 9-3 for minimum radial distance of prohibited zone.)

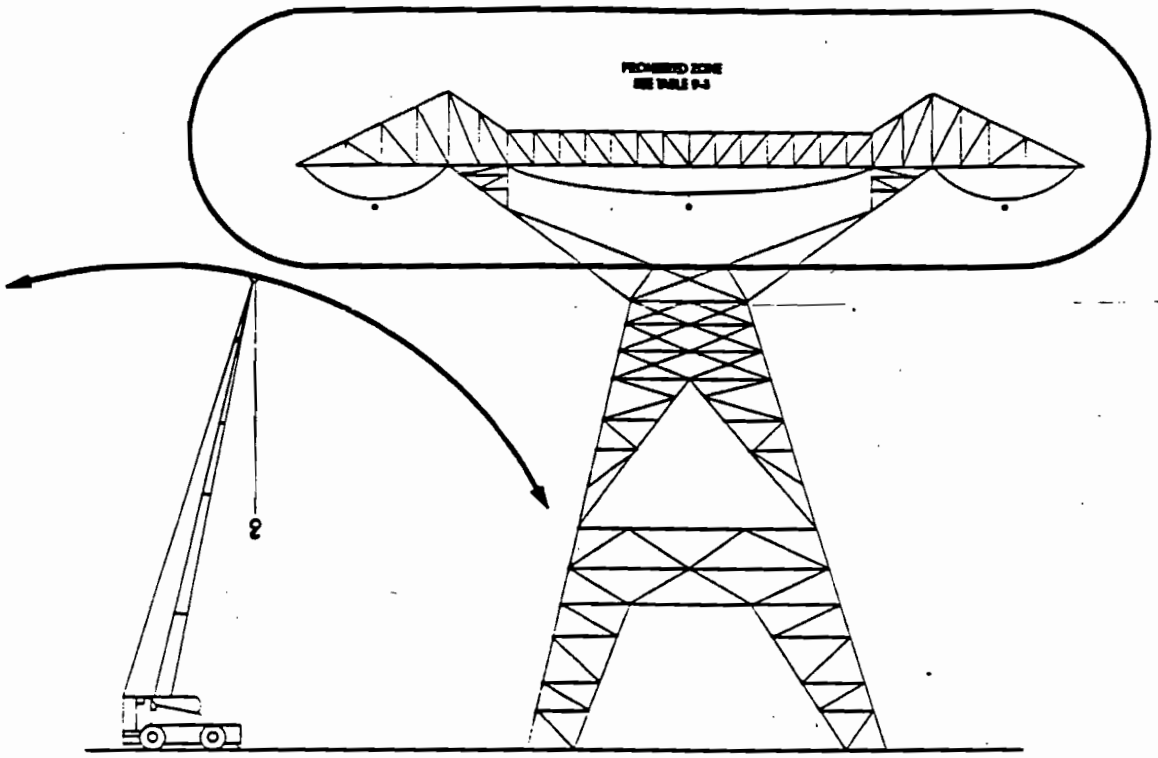

Figure 9-5. Danger zone for cranes and lifted loads operating near electical transmission line.

b. In those cases where the crane operator cannot see the signaler, a second person (relay signaler) shall be stationed where he or she can see both the signaler and the crane operator and can relay the signals to the operator. The relay signaler shall also be clearly identified by the items described in the previous paragraph.

c. Where voice (direct or two-way radio) communication is used, the signaler shall communicate directly with the operator, not through a third person.

d. The operator shall obey signals only from the designated signaler. *Obey a STOP signal no matter who gives it.*

9.5.6 Size of Load

The crane shall not be loaded beyond its rated capacity, except for authorized testing described in Section 9.3.

9.5.7 Attaching the Load

a. Ensure that the hoist rope is free from kinks or twists. Do not wrap the hoist rope around the load.

b. Ensure that the load is attached to the load-block hook by means of slings or other approved devices.

c. Take care to make certain that the sling clears all obstacles.

9.5.8 Moving the Load

a. The appointed person directing the lift shall make certain that the load is well secured and properly balanced in the sling or lifting device before it is lifted more than a few inches.

b. Before starting to hoist, note the following conditions:

1. Hoist rope shall not be kinked.

2. Multiple-part lines shall not be twisted around each other.

3. The hook shall be positioned above the center of gravity of the load in such a manner as to minimize swinging when the load is lifted.

4. Following any slack-rope condition, it should be determined that the rope is properly seated on the drum and in the sheaves.

5. All personnel including the qualified rigger shall be clear of the load.

c. During hoisting, take care to ensure that:

1. There is no sudden acceleration or deceleration of the moving load.

2. Load does not contact any obstructions. A "dry run" shall be conducted in areas where clearance is limited.

d. Cranes shall not be used for side pulls, except when specifically authorized by a designated person who has determined that the stability of the crane is not endangered and that various parts of the crane will not be overstressed.

e. Avoid carrying loads over people.

f. Test the brakes each time a load approaching the rated capacity is handled by raising the load a few inches and applying the brakes.

g. Do not lower the load below the point where less than two full wraps of rope remain on the hoist drum.

h. Do not leave your position at the controls while the load is suspended, unless required to do so by an approved emergency procedure.

i. Work on suspended loads is prohibited under normal conditions. When the responsible manager decides that it is necessary to work on a suspended load, guidelines for ensuring safety of the work shall be established through consultation with the appropriate safety organization. Suspended loads that must be worked on shall be secured against unwanted movement.

j. Tag lines should be used as required to guide, snub, or otherwise control the load.

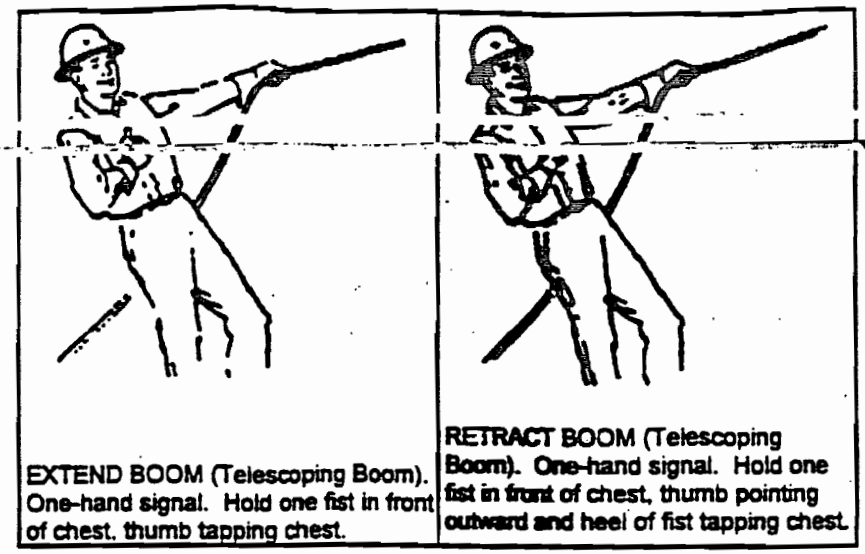

Figure 9-6. (continued).

9.5.9 Ordinary Lifts

a. The requirements of all preceding paragraphs in Section 9.5, "Operation," also shall apply to ordinary lifts.

b. An appointed person shall classify each lift into one of the DOE categories (ordinary, critical or preengineered production) before the lift is planned.

c. Hoisting and rigging operations for ordinary lifts require a designated leader who shall be present at the lift site during the entire lifting operation. If the lift is being made by only one person, that person assumes all responsibilities of the designated leader.

d. Leadership designation may be by written instructions, specific verbal instructions for the particular job, or clearly defined responsibilities within the crew's organizational structure.

e. The designated leader's responsibility shall include the following:

1. Ensure that personnel involved understand how the lift is to be made.

2. Ensure that the weight of the load is determined, that proper equipment and accessories are selected, and that rated capacity is not exceeded.

3. Survey the lift site for hazardous/ unsafe conditions.

4. Ensure that equipment is properly set up and positioned.

5. Ensure that a signaler is assigned, if required, and is identified to the operator.

6. Direct the lifting operation to ensure that the lift is completed safely and efficiently.

7. Stop the job when any potentially unsafe condition is recognized.

8. Direct operations if an accident or injury occurs.

f. The designated leader shall inspect all cranes to ensure that they are still within the inspection interval.

g. The designated leader shall inspect all lifting devices to ensure that the rated capacity of these items of equipment will not be exceeded.

h. The operator shall inspect for damage and defects in accordance with Section 9.2.3, including observations during operation. A qualified person shall examine deficiencies and determine whether they constitute a hazard.

i. Check hoist-limit switches, if provided, according to Section 9.5.3, "Hoist-Limit Switch."

j. Ensure that basic operating instructions of power-operated equipment, together with charts,

tables, or diagrams showing the rated capacity, boom angle, swing, and stability data are posted in convenient view of the operator.

k. Check load lines after strain is put on them but before the load is lifted clear of the ground; if load lines are not plumb, reposition the slings or equipment so that the lines are plumb before continuing.

9.5.10 Critical Lifts

See Chapter 2, "Critical Lifts," for critical lift requirements.

Exhibit I is intended to be a sample form only and is not mandatory. Any other form that accomplishes the purpose is acceptable.

EXHIBIT I

MOBILE CRANE LOAD TEST AND INSPECTION

LICENSE OR EQUIPMENT NO. _____ MAKE _____ DATE _____

HOUR METER-ODOMETER TOTAL _____ RATED CAPACITY _____

LOAD TEST INSPECTION REPORT

The following checklist identifies the items to be inspected prior to the load test. Any unusual conditions observed during the inspection should be noted in the Remarks section. Equipment shall be inspected by maintenance personnel prior to load test.

NOTES:
1. Qualified inspector shall verify the inspection is completed.
2. Craftsmen shall initial and date all tests, work, and inspections completed below.

NO.	CRANE ITEM	DEFECT	OK	NO.	CRANE ITEM	DEFECT	OK
1	Wire Rope			13	Hoist Clutch Lining		
2	Cracked or Worn Sheaves & Drums			14	Hoist Drum Brake Bands		
3	Limit Switch (Anti-Two-Blocking)			15	Open Gears		
4	Boom			16	Boom Jibs (Where Applicable)		
5	Master Clutch			NO.	CARRIER ITEM	DEFECT	OK
6	Steering Clutches			1	Steering Gears and Connections		
7	Hydraulic Pump			2	Brakes (Service and Hand)		
8	Hydraulic Controls			3	Tires and Wheels		
9	Hydraulic Hoses			4	General Lubrication		
10	Mechanical Controls				OPERATING TEST		
11	Drive Chains				OVERALL CONDITION		
12	Swing Clutches						

REMARKS (Unusual conditions—noises, structural cracks, misalignment, etc.)

_____

_____

SAFETY ITEMS: (Fire extinguisher, signs, guards, etc.)

EXHIBIT I (continued)

MOBILE CRANE LOAD TEST AND FOLLOWUP CHECKS

NOTES: 1. Craftsman shall initial all steps completed below.

2. Qualified inspector shall verify all steps below.

_____ 1. Set crane up for load test and inspection.

_____ 2. Perform operations test without load to verify proper function of the following:

- o Load lifting and lowering mechanisms
- o Boom lifting and lowering mechanism
- o Boom extension and retraction mechanisms
- o Swinging mechanism
- o Travel mechanism
- o Safety devices.

_____ 3. Test loads shall not exceed 110% of rated capacity. Refer to load chart for load test capacity at maximum and minimum working radius. Check boom angle indicators for accuracy.

_____ 4. Rig test weights to hook using appropriate slings.

_____ 5. Hoist the test load a sufficient distance to ensure that the load is supported by the crane and held by the hoist brakes. Hold the load for 10 min or the time required to check all primary load-bearing parts while under load without slippage, damage, or permanent deformation.

_____ 6. At least once during the lifting portion of the hoisting cycle and once during the lowering cycle, power to the hoisting equipment shall be completely turned off. There shall be no slippage of the load or overheating of the brakes.

_____ 7. Lower the load to approximately 2 in. off the ground to check for swing-roller operation and outrigger stability. Slowly swing test load between outrigger locations.

_____ 8. Move the load back to the original position and slowly lower to ground.

_____ 9. At the completion of the load test, inspect the following:

Visually inspect rope in accordance with Section 9.2.6.

MOBILE CRANE LOAD TEST AND FOLLOWUP CHECKS

DEFECTIVE/OK

_____ a. Rope diameter: (Previous) _____ (Present) _____

_____ b. Wear

_____ c. Kinks

_____ d. Broken wires

_____ e. Other signs of deterioration.

Visually inspect the rope drum for:

_____ a. Wear

_____ b. Deformation

_____ c. Deterioration

_____ d. Have qualified inspector perform nondestructive tests on hook by visual examination, liquid penetrant examination, or magnetic-particle examination. Acceptance: No cracks, linear indications, laps, or seams.

Hooks with more than 15% normal (new hook) throat opening shall be replaced. Hooks with more than 10 degree twist from the normal (new hook) plane of the hook shall be replaced. Hooks having more than 10% wear in the bowl section or 5% elongation of the shank shall be replaced. Lubricate hook bearing and latch pin, as applicable.

Establish three marks, A, B, and C, with a center punch. For ease in measuring, set distances on an even number of inches.

BEFORE LOAD TEST

Length AB _____ in.

Length BC _____ in.

AFTER LOAD TEST

Length AB _____ in.

Length BC _____ in.

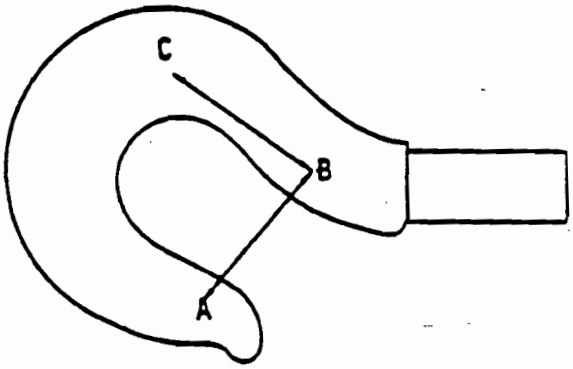

Check for:

1. Wear and deformation
2. Cracks and twisting
3. Signs of opening between Point A and Point B.

EXHIBIT I (continued)

MOBILE CRANE LOAD TEST AND FOLLOWUP CHECKS

This information should be retained with the equipment.

Record the following:

BLOCK WEIGHT _____ lb

TEST WEIGHT _____ lb

RADIUS/CENTER PIN TO LOAD _____ ft

PARTS LINE _____ quantity

BOOM LENGTH _____ ft

Load Test Inspection Date _____

Qualified Inspector _____

Operated By _____

APPENDIX C
RADIOLOGICAL SURVEY DATA FOR CONTAMINATED SOIL AT THORIUM STORAGE WELL SITE

ORNL Radiological Survey Data

Survey Number: SAAS-97-0376 | SAAS Field Office | Date: 8/6/97 | Time: 10:24

Surveyor Badge Number: 616632 ☐ **Routine Survey** **RWP Number:** N/A

Building: 7019 **Specific Location:** Fence Line, South East corner of building.

Description:

Contamination survey of the corner post and surrounding area.

Instruments Used and Calibration Due Date:

2652-06B 7/1/97

General Description of Radiological Conditions:

20,000 dpm beta/gamma detected on the concrete foundation, and 1,000 to 15,000 dpm beta/gamma within two feet of post.

Division or Group Needing the Survey: P&E **Person-hours spent on the survey:** 3

# of Pages: 2 **Completed By:** [signature] **Reviewed by:** [signature] **Date:** 8/7/97

ORNL Radiological Survey Data

Survey Number: SAAS-97-0030 | SAAS Field Office | Date: 1/15/97 | Time: 11:40

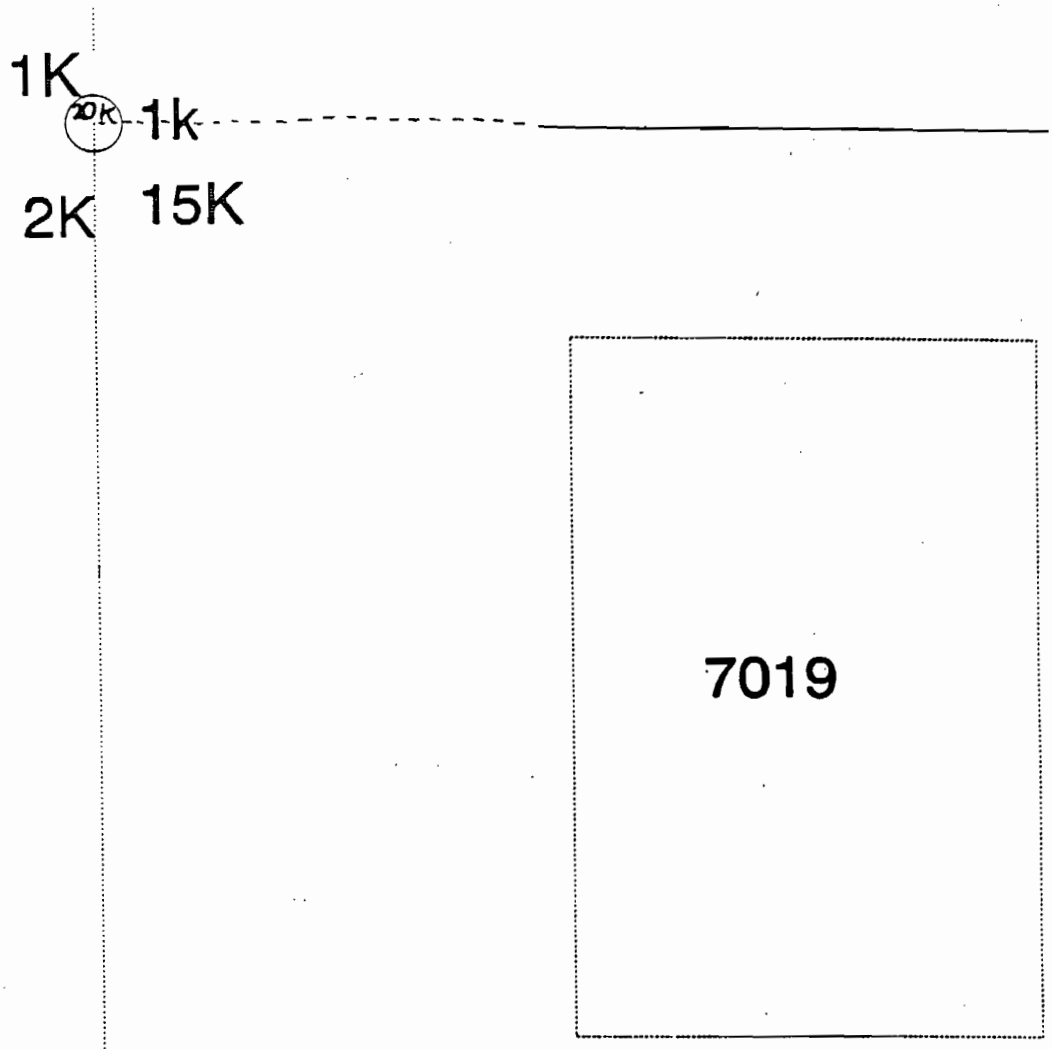

(#)	- Smear Location	Boundary Designations	
(#)—(#)	- Large Area Smear	RA - Radiation Area	BA - Radiological Buffer Area
#	- Contact Dose Rate	HR - High Radiation Area	CA - Contamination Area
#	- 30 cm Dose Rate	VR - Very High Radiation Area	HC - High Contamination Area
#	- General Area Dose Rate	AR - Airborne Radioactivity Area	FC - Fixed Contamination Area
SOP	- Step-off Pad	P I - Potential Internal Contamination Area	IC - Internal Contamination Area
AS	- Air Sample Location	UM - Underground Radioactive Material Area	SC - Soil Contamination Area

The default units for dose rates are expressed in dose equivalent as mrem/h. If the dose rates are in units other than mrem/h (e.g., rem/h, umrem/h, etc.), then this shall be noted on the map. Dose rates designated on the survey indicate a summation of all the types of radiation detected, unless the indicated dose rate has a type-identifier with it (e.g., 2G). The type identifiers are as follows: B - Beta, G - Gamma, N - Neutron. Boundary designations are looking from the designations into the zoned area.

DISTRIBUTION

1. L. V. Asplund
2. R. L. Chadwick
3. S. A. Herron
4. T. M. Koepp
5. S. L. Laman
6. P. T. Owen
7. L. B. Raulston
8. A. D. Reynolds
9. M. M. Whitehead
10. H. D. Wooten
11. Central Research Library
12. File—EMEF DMC—RC