OAK RIDGE
NATIONAL LABORATORY

MANAGED BY UT-BATTELLE
FOR THE DEPARTMENT OF ENERGY

ORNL/TM-2002/77

Heavy-Section Steel Irradiation Program's Reusable Irradiation Facilities

D. W. Heatherly
K. R. Thoms
M. T. Hurst
G. E. Giles

April 2005

UT-BATTELLE

ORNL-27 (2-03)

DOCUMENT AVAILABILITY

Reports produced after January 1, 1996, are generally available free via the U.S. Department of Energy (DOE) Information Bridge:

Web site: http://www.osti.gov/bridge

Reports produced before January 1, 1996, may be purchased by members of the public from the following source:

National Technical Information Service
5285 Port Royal Road
Springfield, VA 22161
Telephone: 703-605-6000 (1-800-553-6847)
TDD: 703-487-4639
Fax: 703-605-6900
E-mail: info@ntis.fedworld.gov
Web site: http://www.ntis.gov/support/ordernowabout.htm

Reports are available to DOE employees, DOE contractors, Energy Technology Data Exchange (ETDE) representatives, and International Nuclear Information System (INIS) representatives from the following source:

Office of Scientific and Technical Information
P.O. Box 62
Oak Ridge, TN 37831
Telephone: 865-576-8401
Fax: 865-576-5728
E-mail: reports@adonis.osti.gov
Web site: http://www.osti.gov/contact.html

This report was prepared as an account of work sponsored by an agency of the United States Government. Neither the United States government nor any agency thereof, nor any of their employees, makes any warranty, express or implied, or assumes any legal liability or responsibility for the accuracy, completeness, or usefulness of any information, apparatus, product, or process disclosed, or represents that its use would not infringe privately owned rights. Reference herein to any specific commercial product, process, or service by trade name, trademark, manufacturer, or otherwise, does not necessarily constitute or imply its endorsement, recommendation, or favoring by the United States Government or any agency thereof. The views and opinions of authors expressed herein do not necessarily state or reflect those of the United States Government or any agency thereof.

ORNL/TM-2002/77

Heavy-Section Steel Irradiation Program's Reusable Irradiation Facilities

Manuscript Completed: April 2002
Date Published: April 2005

Prepared by
D. W. Heatherly, K. R. Thoms, M. T. Hurst, G. E. Giles

C. J. Fairbanks, NRC Project Manager

Prepared for
Division of Engineering Technology
Office of Nuclear Regulatory Research
U.S. Nuclear Regulatory Commission
Washington, DC 20555-0001
NRC Job Code W6953

Prepared by
OAK RIDGE NATIONAL LABORATORY
P.O. Box 2008
Oak Ridge, Tennessee 37831-6283
managed by
UT-Battelle, LLC
for the
U.S. DEPARTMENT OF ENERGY
under contract DE-AC05-00OR22725

CONTENTS

	Page
Figures	v
Tables	vii
Abbreviated Terms	ix
Acknowledgements	xi
Abstract	xiii
1. Introduction	1
2. Ford Nuclear Reactor	3
3. HSSI-UCSB Facility	5
3.1 Facility Design	5
3.2 Instrumentation and Control System	11
3.3 Operation	11
3.4 Specimen Packet Changeout Process	21
4. HSSI-IAR Facilities	23
4.1 Facility Design	23
4.2 Irradiation Capsule Design	25
4.3 Instrumentation and Control System	25
4.4 Specimen Exchanges and Rotation	28
4.5 Operation	32
4.6 Thermal and Neutronic Characterization	34
5. Conclusion	43
6. References	45
Appendix. Publications List	A-1

FIGURES

		Page
1	East face irradiation facility at the FNR	2
2	Cross section through UCSB facility and basket assemblies at FNR core midplane	6
3	Schematic of HSSI-UCSB irradiation facility	7
4	Specimen packet basket assemblies for the HSSI-UCSB irradiation facility	8
5	Schematic elevation (side) view of the UCSB high- and intermediate/ low-flux capsules	9
6	Location of heater zones in HSSI-UCSB irradiation facility	10
7	Instrument application diagram for HSSI-UCSB facility	12
8	Internet-accessible screen showing real-time operating data for the HSSI-UCSB facility	13
9	Heater plate thermocouple temperatures (°C) for gamma heating only in the HF region of the HSSI-UCSB facility	15
10	Heater plate and blade thermocouple temperatures (°C) for gamma heating only in the IF/LF region of the HSSI-UCSB facility	16
11	Temperature distribution in the HF region of the HSSI-UCSB facility	17
12	Temperature distribution in the IF/LF region of the HSSI-UCSB facility	18
13	Thermocouple plots of three thermocouples (one from each temperature zone) in the HSSI-UCSB facility for a complete half-cycle of reactor operation	19
14	Temperature plots for two thermocouples (same temperature zone) in the HSSI-UCSB facility for short period of time, indicating excellent temperature control	19
15	Lead-filled cask used for specimen packet changeouts in the HSSI-UCSB facility	21
16	Cross section through an IAR facility and capsule at FNR core midplane	23
17	Schematic of HSSI-IAR irradiation capsule and facility at east face of FNR	24
18	Shelf plate and thermocouple locations in the HSSI-IAR irradiation capsule	26
19	Instrument application diagram for HSSI-IAR facility	27
20	Internet-accessible screen showing real-time operating data for the HSSI-IAR facilities	29
21	Transfer cask used for specimen changeouts in the HSSI-IAR facilities	30
22	Sequence of steps to transfer the specimen container to the hot cell	31
23	Changeout of specimens in IAR capsule at FNR hot cell	32
24	HSSI-IAR irradiation capsule with lid removed and loaded with 15 1T compact-tension specimens	33
25	Irradiation capsule loading used for thermal and neutronic characterization	34
26	Thermocouple temperatures (°C) for gamma heating only in the north facility (IAR-1)	36

Page

27 Thermocouple temperatures (°C) for gamma heating only in the south facility (IAR-2) 37
28 Thermocouple temperatures (°C) with 3910 W of electric heat applied to the north facility (IAR-1) 38
29 Thermocouple temperatures (°C) with 5248 W of electric heat applied to the south facility (IAR-2) 39
30 IAR-1 and IAR-2 electrical heater power input before and after cranking against reactor 40
31 Temperature vs time plot for thermocouples 1–4 in IAR-1 during complete reactor half-cycle 41
32 Temperature vs time plot for thermocouples 1–4 in for short period of time, indicating excellent temperature control 41

TABLES

1 Control thermocouples for heater zones in HSSI-UCSB facility 20

ABBREVIATED TERMS

DCS	distributed control system
FNR	Ford Nuclear Reactor
HF	high-flux
HSSI	Heavy-Section Steel Irradiation
IAR	Irradiation Anneal Reirradiation
IF/LF	intermediate-flux/low-flux
I/O	input/output
MMI	man-machine interface
MTBF	mean time between failure
MTR	materials testing reactor
NRC	U.S. Nuclear Regulatory Commission
ORNL	Oak Ridge National Laboratory
PID	proportional, integral, and digital
RPV	reactor pressure vessel
SCADA	supervisory control and data acquisition
UCSB	University of California, Santa Barbara

ACKNOWLEDGMENTS

The authors would like to thank Don Raby of ORNL for his hard work and dedication in the development of the instrumentation and control systems; Bob Sitterson of ORNL for his efforts in the assembly of these facilities; Doug Sparks of BWXT Y-12 for the preparation of all the engineering design drawings of the facilities; Ilana Siman-Tov, retired from ORNL, for directing the initial design of these facilities; Bob Odette from UCSB for his input to the design of the HSSI-UCSB facility; and Phil Simpson and Eric Touchberry of the University of Michigan for their assistance in this project. The authors would also like to acknowledge the support and encouragement of Mike Vassilaros of the NRC who was the Project Manager when the concepts for these facilities were originated.

This report is a record of work performed at ORNL under the HSSI Program (W6953), T. M. Rosseel, program manager. The NRC Office of Nuclear Regulatory Research sponsors the HSSI program under interagency agreement DOE 1886-N695-3W with DOE, under contract DE AC05-00OR22725 with UT-Battelle, LLC. The technical monitor for the NRC is C. J. Fairbanks.

ABSTRACT

Three materials-irradiation facilities have been designed, fabricated, and installed by the Heavy-Section Steel Irradiation (HSSI) Program. These facilities, which operated at the Ford Nuclear Reactor at the University of Michigan until July 3, 2003, are described in this report.

Two of the facilities are referred to as the HSSI-IAR facilities with the individual facilities being designated as IAR-1 and IAR-2. The third is referred to as the HSSI-UCSB facility. These unique facility designs require no cutting or grinding operations to retrieve irradiated specimens. All capsule hardware is totally reusable, and materials transported from site to site are limited to dosimeters and specimens. A wide variety of operating temperatures, with excellent thermal stability, and neutron fluxes are available. Thus, these facilities provide extremely flexible and valuable tools for performing relatively inexpensive irradiation experiments.

1. INTRODUCTION

Irradiation and testing of reactor-pressure-vessel (RPV) steels have been performed by Oak Ridge National Laboratory (ORNL) under the Heavy-Section Steel Irradiation (HSSI) Program for the U.S. Nuclear Regulatory Commission (NRC) for more than 20 years to determine the condition of RPVs currently in use and to investigate the possibility of plant-life extension. (See Appendix, "Publications List.") Typical irradiation experiments consisted of a sealed container that housed the metallurgical specimens to be irradiated. Specimen sizes varied considerably but usually were in the form of compact-tension, Charpy, tensile, crack-arrest, or drop-weight specimens. Specimens were sealed in the test vehicle with the heaters, thermocouples, and flux monitors, and the entire assembly was irradiated for the time necessary to provide desired fluence. The entire assembly was then shipped from the reactor site to a hot cell in which the sealed test vehicle and all instrumentation leads were destroyed to recover the irradiated specimens for testing. Fabrication of additional test vehicles was required to irradiate additional specimens under the same conditions or to investigate the effects of differing conditions on similar materials.

With the exception of two capsules from the tenth series, all previous irradiation experiments performed for the NRC by ORNL were irradiated in reactors at ORNL. Disassembly of the experiments also took place on site, which required that the irradiated experiment be shipped in a lead-shielded container for a short distance from the reactor facility to the hot-cell facility. With the shutdown in the late 1980s of the ORNL test-reactor facilities suitable for the HSSI Program needs, irradiations now must be performed at an off-site reactor. The HSSI Program has chosen the Ford Nuclear Reactor (FNR) at the University of Michigan to perform these irradiations. Because the FNR does not have a hot cell large enough for the operations required to disassemble the experiments and retrieve specimens, it would be necessary to ship all of these irradiated materials to the ORNL facilities. Shipment of irradiated materials over public highways has proved to be quite different from an ORNL on-site shipment and is a slow and expensive process. Because shipment, disassembly, and disposal of nonspecimen hardware proved to be more and more difficult and expensive, these facilities were designed such that all capsule hardware can be reused. With such facilities it is only necessary to ship specimens from FNR to ORNL or any other designated location.

As a consequence, three materials irradiation facilities have been designed and fabricated. They have been installed and are now operating at the FNR at the University of Michigan. Two are referred to as the HSSI-Irradiation-Anneal-Reirradiation facilities (HSSI-IAR) with the individual facilities being designated as IAR-1 and IAR-2. Because the initial users were researchers from the University of California, Santa Barbara (UCSB), the third facility is designated the HSSI UCSB facility. The design and fabrication of the HSSI-UCSB facility was completed in November 1996. Following a series of neutronic and thermal characterization tests, irradiation of actual test specimen subcapsules began in January 1997. The design and fabrication of the HSSI-IAR facilities were completed in October 1998, and following temperature and dosimetry characterization tests, irradiation of the first metallurgical specimens began in December 1998.

The facilities are located on the east face of the FNR core, with the HSSI-UCSB facility being located between the IAR-1 and IAR-2 facilities. The IAR-1 facility is located on the north side of the UCSB facility, and the IAR-2 facility is located on the south side of the UCSB facility, as shown in Fig. 1. The three facilities are positioned inside a cagelike assembly constructed of aluminum, except for the front plate, which is 0.5-in.-thick (12.7-mm) stainless steel. This front

plate, or thermal shield, provides gamma attenuation to reduce gamma heating in the irradiation experiments. The cagelike assembly, containing the three facilities, is mounted on a movable carriage assembly that is installed in the experiment grid on the east side of the FNR core. The carriage assembly is used to crank the three facilities, as a unit, into and away from the FNR core face.

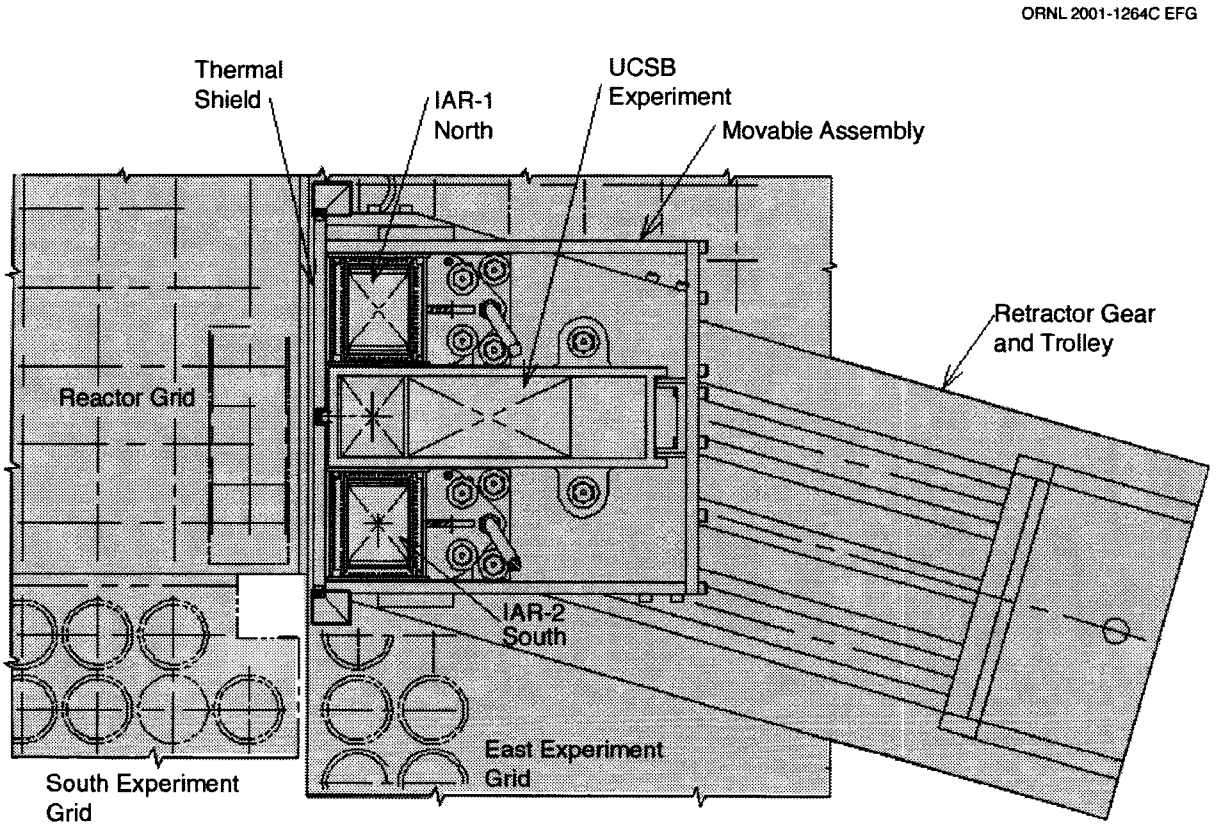

Fig. 1. East face irradiation facility at the FNR.

2. FORD NUCLEAR REACTOR

The FNR is a 2-MW, pool-type, research reactor located on the campus of the University of Michigan, in Ann Arbor, Michigan, USA. The reactor core is composed of Materials Testing Reactor (MTR)-type fuel elements arranged in a 6 × 8 lattice grid. A typical core configuration consists of about 36 standard fuel elements and 4 control rod elements. The reactor operates in 2-week increments (designated half-cycles), consisting of 10 days at power and 4 days shutdown. Startup of the reactor usually occurs on Tuesday, and shutdown occurs on the second Friday after startup. The 4-day period from shutdown on Friday until startup on the following Tuesday is used for reactor refueling and maintenance operations. During reactor shutdown periods, the HSSI facilities are retracted from the reactor face, and all electrical heaters are shut off.

Large experimental grids project from the south and east faces of the reactor core to permit precise placement of experiments for irradiation. A movable carriage assembly has been installed on the east face of the core to irradiate large capsules for the NRC's HSSI Program. Mounted on the carriage is a cagelike assembly constructed of aluminum, except for the front plate, which is 0.5-in.-thick (12.7-mm) stainless steel. This movable assembly was originally built to accommodate large irradiation capsules, but it was modified to accommodate the facilities described here.

3. HSSI-UCSB Facility

3.1 FACILITY DESIGN

The HSSI-UCSB irradiation facility consists of a sealed container that incorporates 50 electrical heaters, which supply heat input to 25 separate heater zones. It is instrumented with 49 thermocouples used to monitor specimen temperatures. The entire irradiation facility is enclosed in a boral shield. The boral shield is a layer of boron carbide sandwiched between two thin layers of aluminum that reduces the activation of specimens during irradiation by approximately 90%. Inside the facility two removable specimen baskets contain the specimen packets supplied by the experimenter. Typical specimen packets consist of various types of small tensile, fracture, and microstructural specimens that are encapsulated in unsealed aluminum containers. The packets of specimens can be strategically placed inside the facility in various locations to provide the desired temperature and neutron flux.

The facility has two separate sections: the high-flux (HF) and the intermediate-flux/low-flux (IF/LF) sections. Each section is surrounded by heater plates in which 1/16-in.-diam electrical heaters are wound. There are 11 heater zones surrounding the HF section and 14 heater zones around the IF/LF section. For redundancy, each heater zone uses two heaters. Within each section, basket assemblies are placed to accommodate individual specimen packets. The outer dimensions of the full-size specimen packets are 2 × 2 × 0.5 in. (50.8 × 50.8 × 12.7 mm). It is possible to load larger specimen packets that conform dimensionally to multiples of standard-size packets. There are also four half-size specimen packets with dimensions 2 × 0.92 × 0.5 in. (50.8 × 22.9 × 12.7 mm).

Figure 2 shows a cross section through the facility. A schematic diagram of the irradiation facility, provided in Fig. 3, also shows the temperature zones in the baskets and the basket positions relative to the core. The specimen baskets, with their unique sliding cover plate design, are shown in Fig. 4. The removable specimen basket in the HF portion of the facility can contain 2 specimen packets at 270°C, 2 specimen packets at 310°C, and up to 14 specimen packets at 290°C. The IF/LF specimen basket can contain up to 9 specimen packets at 270°C, 9 specimen packets at 310°C, and 18 specimen packets at 290°C. There is also space for four half-size specimen packets in the IF/LF portion of the facility opposite the thermocouple blade, which is located in the center of the basket and which is used to measure specimen temperatures. To accommodate logistics for the 58 specimen packet locations, a designation system was developed as shown in Fig. 5.

Based on thermal analyses, the heater zone locations were chosen to provide optimal localized heat input that best achieves the desired temperature distribution throughout both sections of the facility. This optimization process resulted in heater zone locations shown in Fig. 6. Heater zones 1–8 and zone 11 are 2 in. high, while the remaining zones are each 1 in. high.

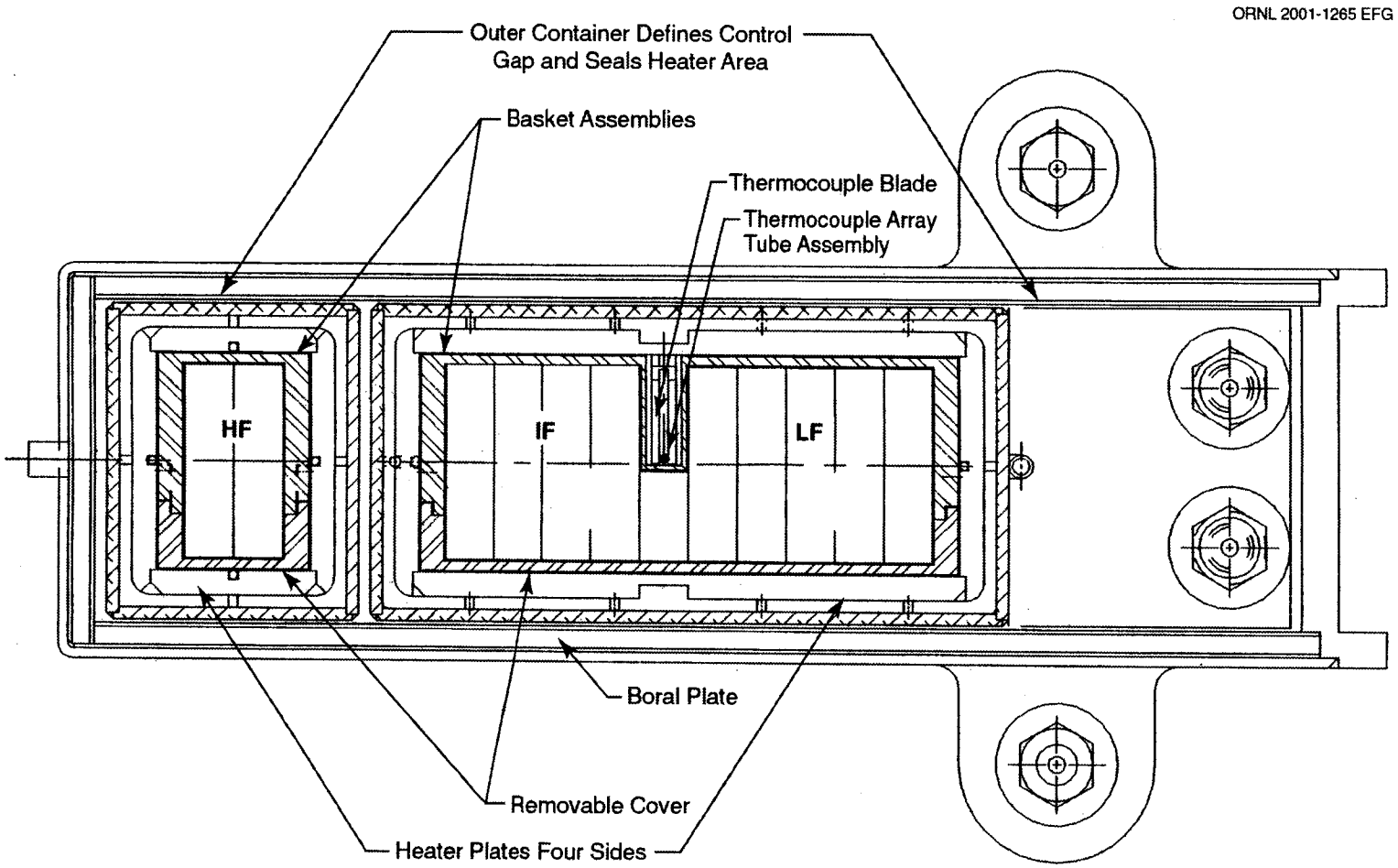

Fig. 2. Cross section through UCSB facility and basket assemblies at FNR core midplane.

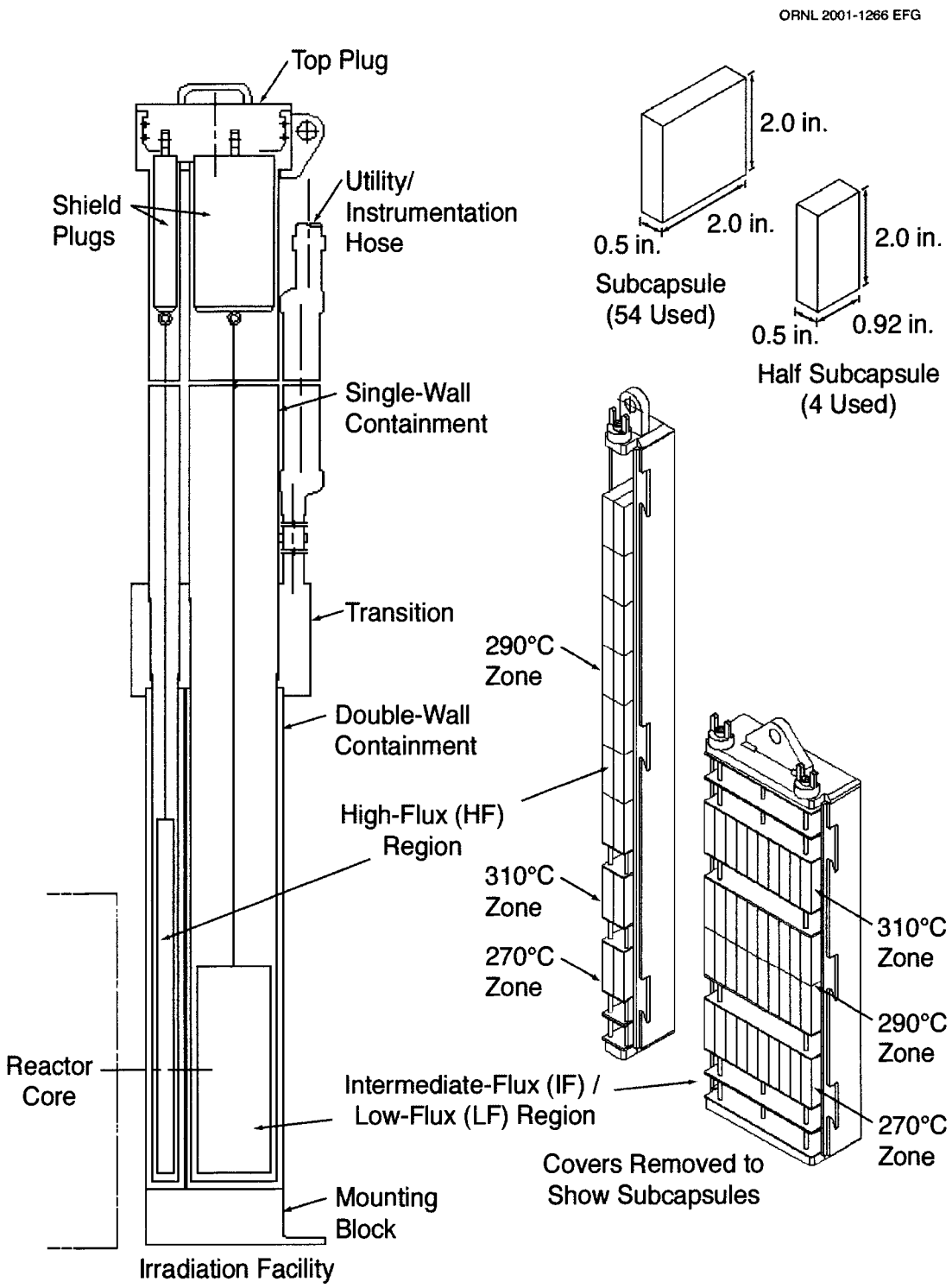

Fig. 3. Schematic of HSSI-UCSB irradiation facility.

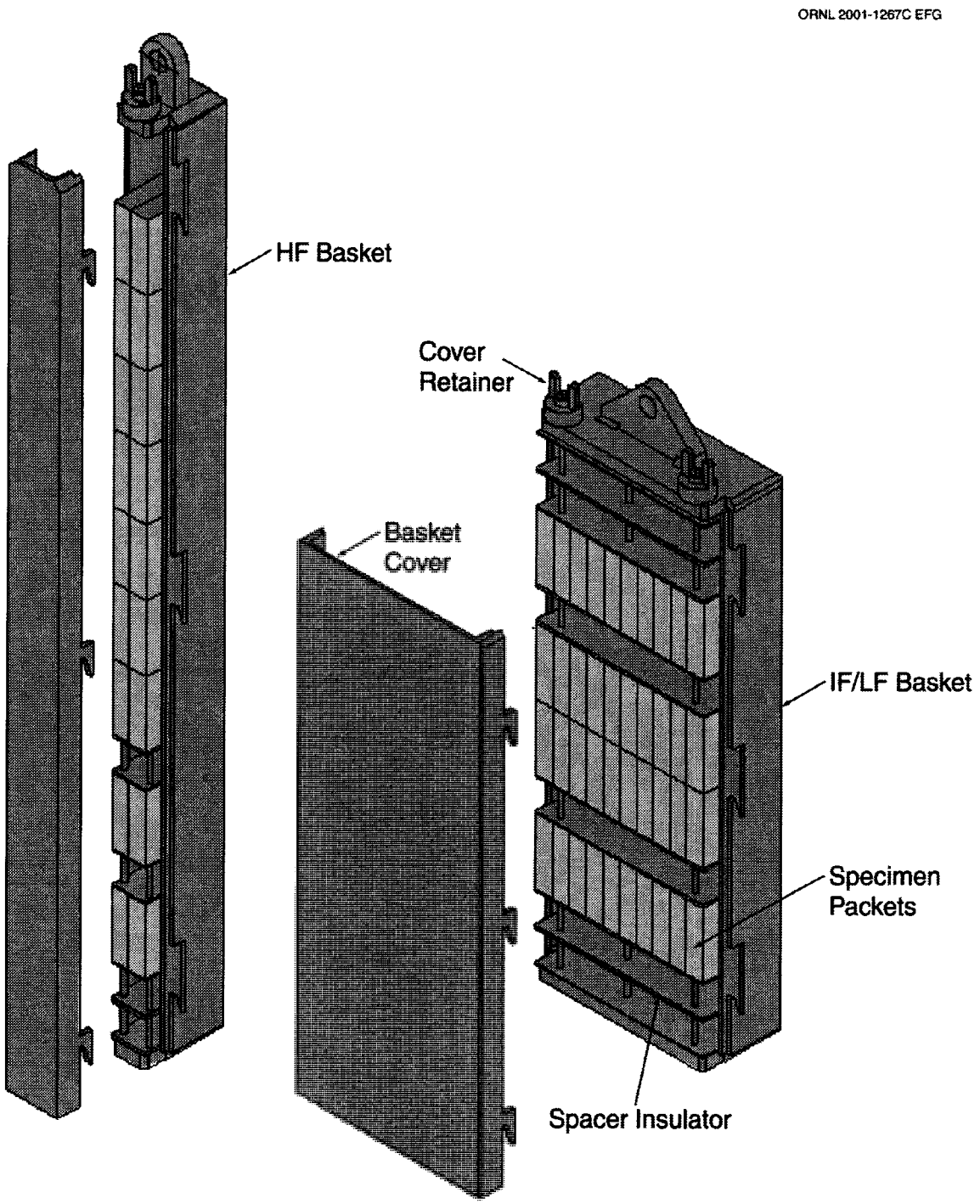

Fig. 4. Specimen packet basket assemblies for the HSSI-UCSB irradiation facility.

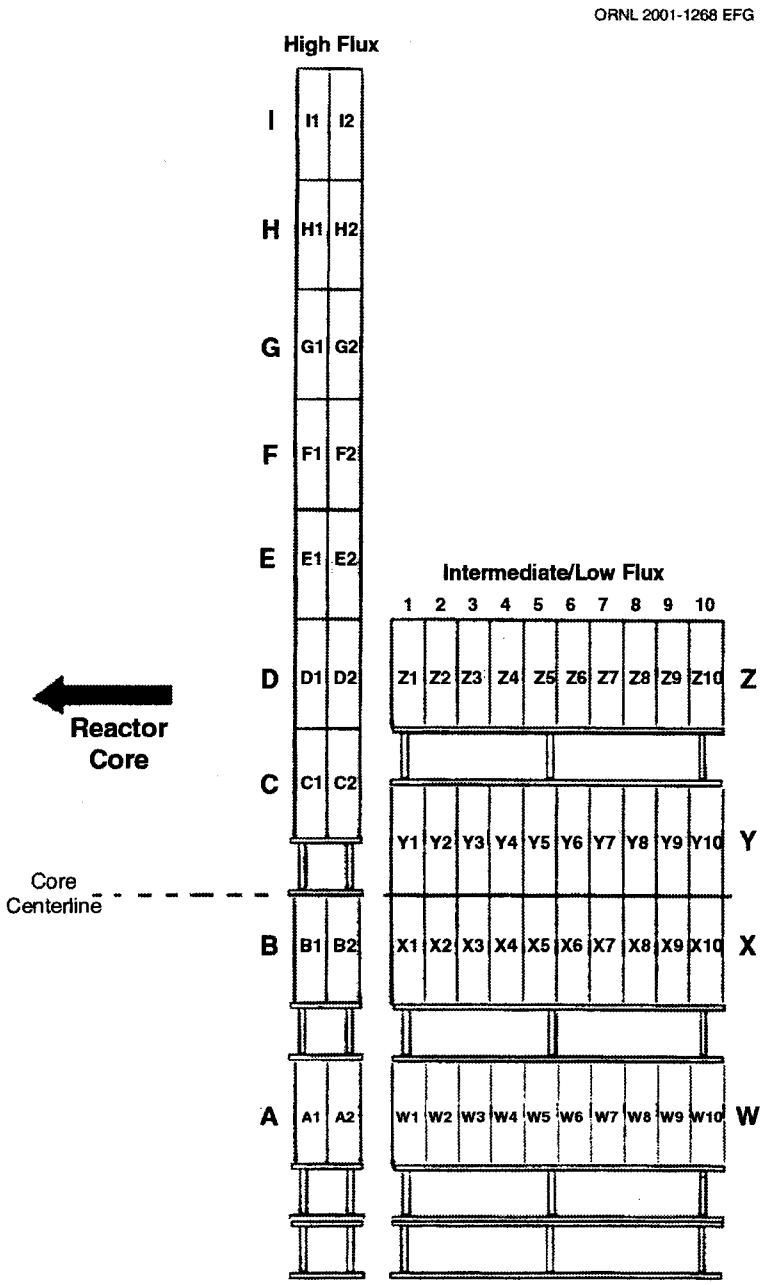

Fig. 5. Schematic elevation (side) view of the UCSB high- and intermediate/low-flux capsules. Identifiers for the specimen packet positions are shown.

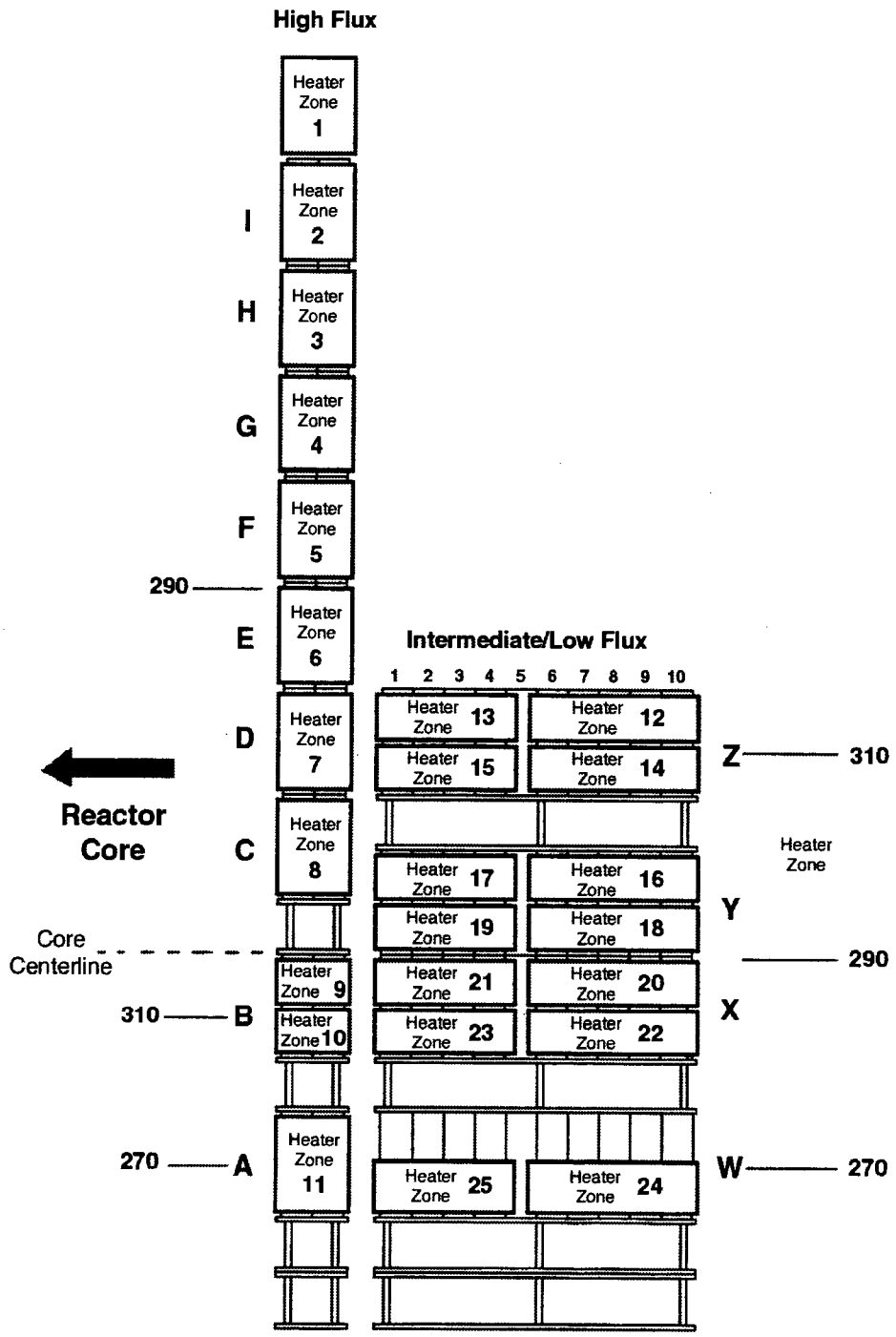

Fig. 6. Location of heater zones in HSSI-UCSB irradiation facility.

3.2 INSTRUMENTATION AND CONTROL SYSTEM

The instrumentation and control system is used to provide gas flow to the facility, monitor temperatures, and control the electric heaters. An instrumentation application diagram of the HSSI-UCSB facility is shown in Fig. 7.

While the facility presently operates with 100% helium sweep gas, it is possible to use mixed gases, such as neon and helium, to aid in temperature control. The gas flow rate is maintained at about 150 sccm at 11 psig (76 kPa). Relief valves set at 13 psig (90 kPa) are located on the inlet and exit lines of the facility to ensure that overpressurization does not occur. The entire facility is controlled through a supervisory control and data acquisition (SCADA) system, which consists of the main control computer or SCADA node, electronic heater controllers, electronic flow controllers, and moisture monitoring sensors. The software used is Intellution's FIX, a commercial man-machine interface (MMI). The system can be monitored and operated on site or remotely from anywhere in the world using a remote key and proper password. The current software configuration can monitor and control more than 300 points and can be expanded to several thousand points.

The current configuration monitors and/or controls 50 thermocouples, 25 heater zones, 4 control valves, and 25 alarm annunciators. The data points are scanned once per second and recorded every 30 seconds. This rate can be changed at any time from the FNR or ORNL. The remote communications consist of a modem for phone line access and a network card for Internet access. The experimenter has the capability to view and obtain real-time data 24 h/day. Figure 8 shows the Internet-accessible screen with real-time operating data.

The SCADA node for this facility operates in parallel with a SCADA node for the HSSI-IAR facilities. Either system has the capability of taking control of both nodes. Data storage is redundant. It uses the local server's hard drive and once every three days is sent over the local network to a server storage system at ORNL. The data received from Michigan are transferred to a CD after the storage drive system reaches a defined capacity. The CDs are validated by the experimenter and stored at ORNL. The data are stored in compressed format to conserve disk space; they can be exported in any number of ways to support Lotus, Excel, Fox Pro, and D-Base. The data may also be exported in ASCII format.

The FIX software has the capabilities of many real-time reporting formats, such as real-time trending, historical trending, and spreadsheet. The data can be customized to incorporate relational data bases like Access and Oracle. The FIX software has capabilities to add on-line statistical analysis to generate real-time reports.

3.3 OPERATION

Thermal and neutronic characterization of the facility was performed during the first two reactor half-cycles after installation. Because the HSSI-IAR facilities were not installed during the initial operation of the HSSI-UCSB facility, steel blocks (with aluminum spacers to simulate gaps) with the same external dimension as the IAR facilities were placed on either side of the UCSB facility to ensure that the neutronic characteristics would be the same as with the IAR facilities in place. During these tests the baskets were loaded with dummy specimen packets, some of which had been drilled for insertion of flux gradient wires and fission radiometric sets. The gradient wires and fission radiometric sets measure and map the flux in the different regions of the facility.

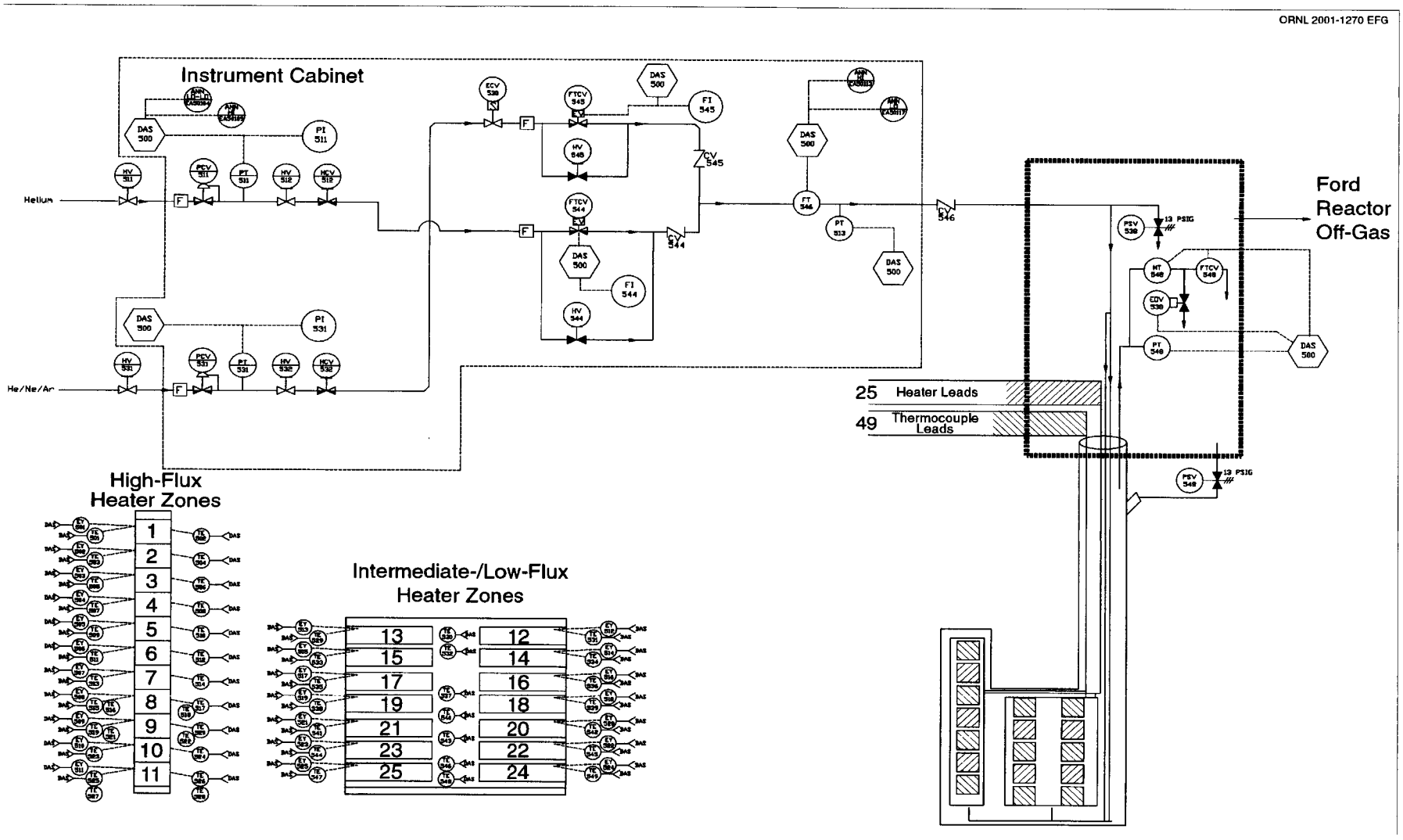

Fig. 7. Instrument application diagram for HSSI-UCSB facility.

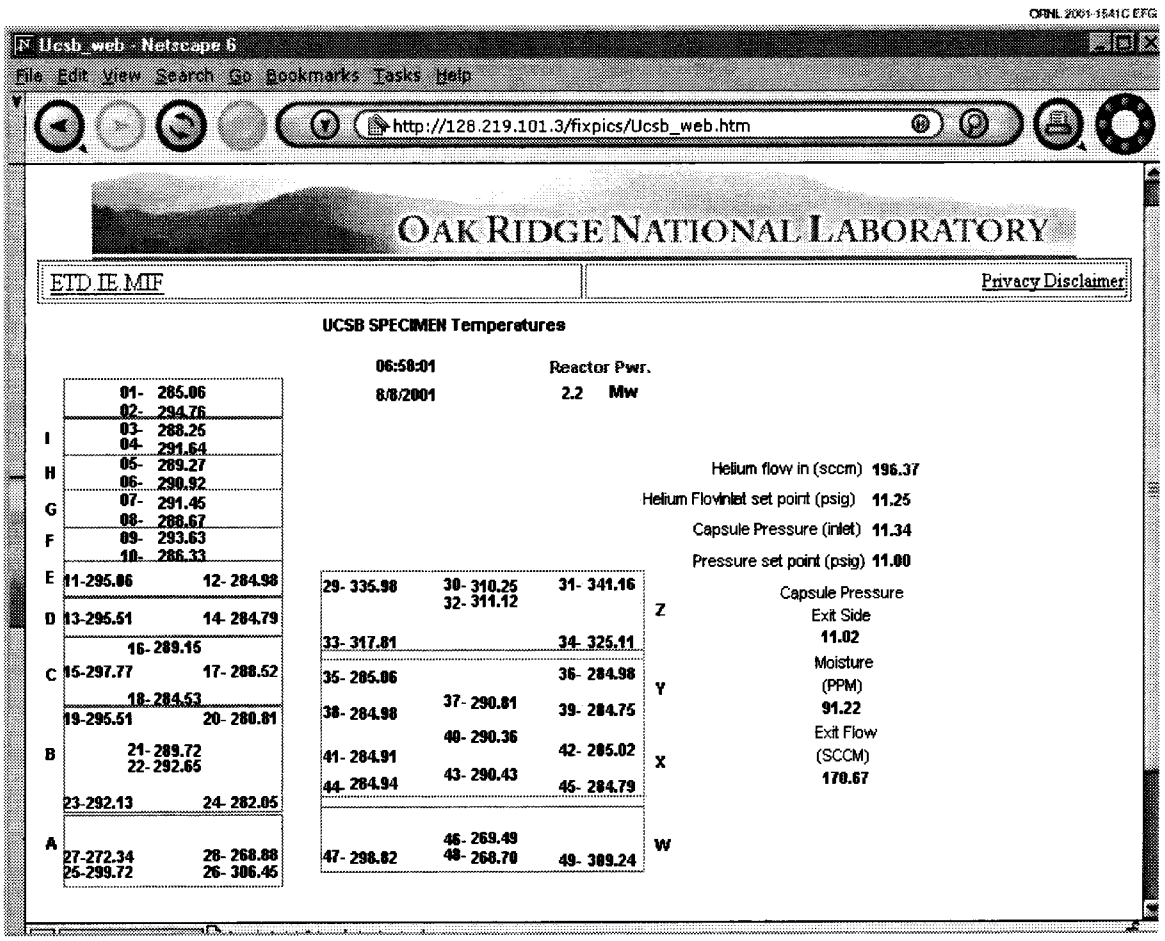

Fig. 8. Internet-accessible screen showing real-time operating data for the HSSI-UCSB facility.

A full characterization of the neutron field in each region of the facility can be determined from the results of the dosimetry and neutron transport calculations.

Because the thermocouples for the HSSI-UCSB facility are placed in the heater plates and thermocouple blade (not in specimens), it was necessary to perform heat transfer analyses to determine the relationship between thermocouple-indicated temperatures and the temperature of specimen packets.

An operational goal of the facility is to maintain specimen packets within ±5°C of a selected temperature. To verify this condition, a three-dimensional, steady state, thermal model was constructed for use with the ORNL-developed HEATING 7.2 heat transfer code (Ref. 2). This model was based on the initial design studies model with appropriate modifications, such as (1) incorporating the as-built configuration, (2) adding the capability to perform thermal expansion of components, and (3) adding detail to the modeling of the specimen packet and heater plate/thermocouple regions to permit determination of thermocouple temperatures. It was assumed that the inner surface of the boral shield and the boundary between the HF and IF/LF sections are at pool water temperature. These are conservative assumptions for this analysis because the actual temperature of these boundaries will be higher and thus the thermal gradients within the facility will be smaller than calculated. If these analyses indicate that the specimen

temperatures will be maintained within the desired bounds, then the range in temperatures will be even less in actual operation.

Literature values of the conductivity and emissivity of materials were used. These values should be valid for the solid metal parts. However, due to thermal contact resistance and the existence of voids, the specimen packets, which are a collection of small irregular-shaped metal parts in an aluminum housing, should have a lower thermal conductivity than the solid material used in the thermal models. Additionally, the nuclear heating should be reduced somewhat due to the lower density.

To confirm the assumed distribution of nuclear heat in the models, a gamma heating experiment was performed in which the facility was placed against the reactor face with no electrical heat. The thermocouple readings for this test, shown in Fig. 9 for the HF region and Fig. 10 for the IF/LF region, were compared to results from the thermal model. The assumed nuclear heating distribution was then adjusted to achieve the best match with the thermocouple data. The original estimate for the nuclear heating gradient vs distance from the reactor face was determined by assuming a solid block of stainless steel placed directly adjacent to the reactor face. A cosine variation was used in the vertical direction. The original horizontal distribution gave a reasonable match. However, when it was adjusted to account for the additional shielding not previously accounted for between the reactor face and the facility, better matches to observed conditions could be made. The rms deviation for this comparison between calculated and observed thermocouple readings was 0.8°C.

This adjusted heat generation distribution was used to determine temperatures throughout the facility so that the gas gaps could be modified to account for thermal expansion. Both conduction and radiation were accounted for in all gaps in the model. Natural convection was not included because the size of the gaps, and the temperature gradients are too small for this mode of heat transfer to be effective. Forced convection was also considered to be negligible because of the low flow velocities in the gaps.

From the many analyses performed, it was observed that the blade thermocouples (TCs 30, 32, 37, 40, 43, 46, and 48) are close to the average temperature of the specimen packet volumes. For this reason, the thermocouples were used to determine the heater power in the model. When the model demonstrated that all the specimen packets were within the desired temperature ranges, the target temperature of all the thermocouples was extracted from the model. Additional analyses including more accurate models of the specimen packets were performed using this control. Even with up to 50% reductions in either thermal conductivity or nuclear heat generation (separately) of the specimen packets, the model showed that temperatures were maintained within desired tolerances.

The target temperatures along with observed thermocouple readings after the addition of electrical heater power are presented in Figs. 11 and 12. These figures show that it was possible to get within 3°C or better of the target temperature for all of the thermocouples in the facility. The thermal stability of the facility at design temperature is demonstrated in Fig. 13, which shows a detailed history of one thermocouple from three different temperature regions of the facility. It is a plot of temperature vs time for thermocouples 6, 32, and 46; it represents the temperature history in three different temperature zones during a 10-day reactor half-cycle that ran March 10–20, 1999. Figure 14 is an expanded view of the temperatures recorded by

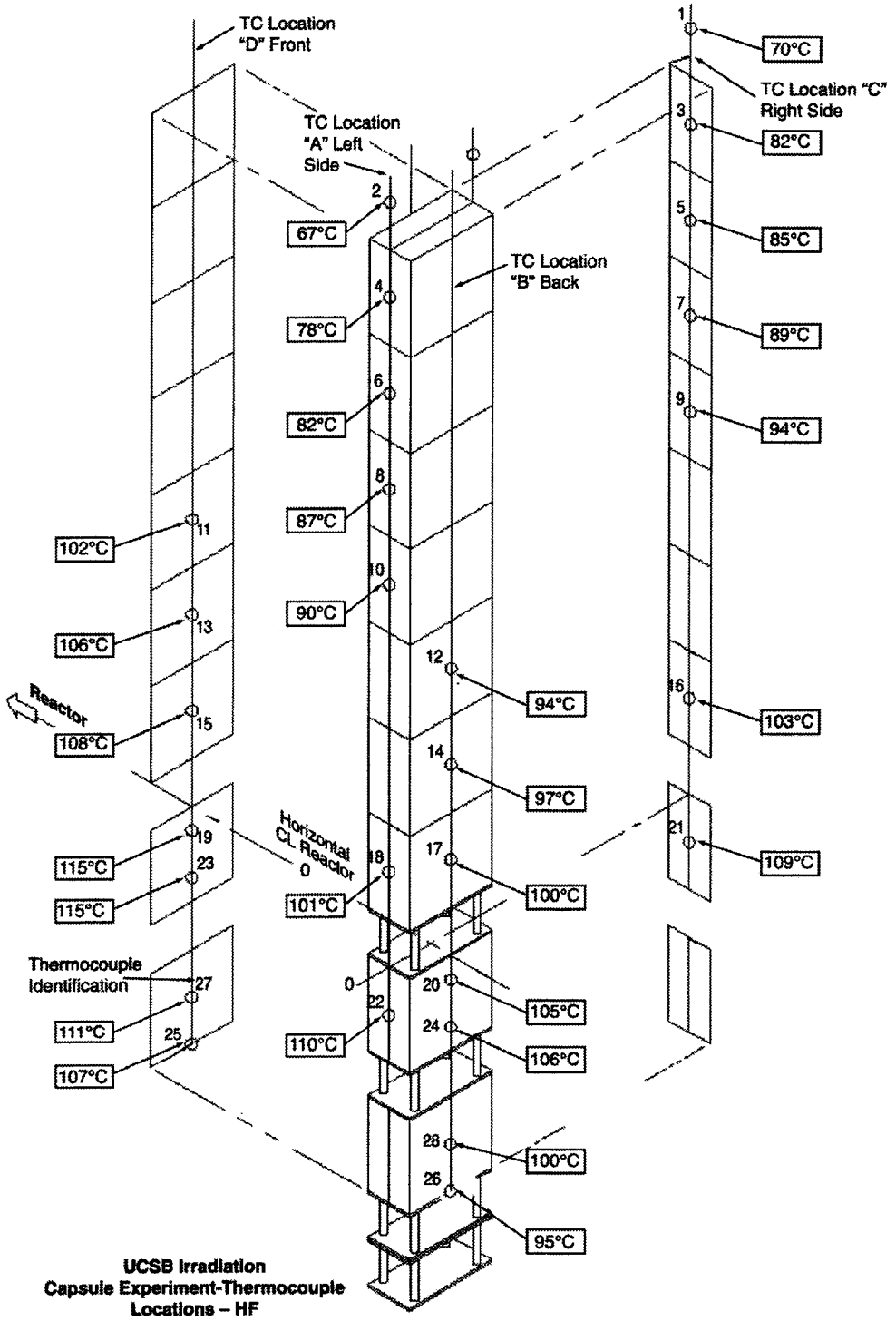

Fig. 9. Heater plate thermocouple temperatures (°C) for gamma heating only in the HF region of the HSSI-UCSB facility.

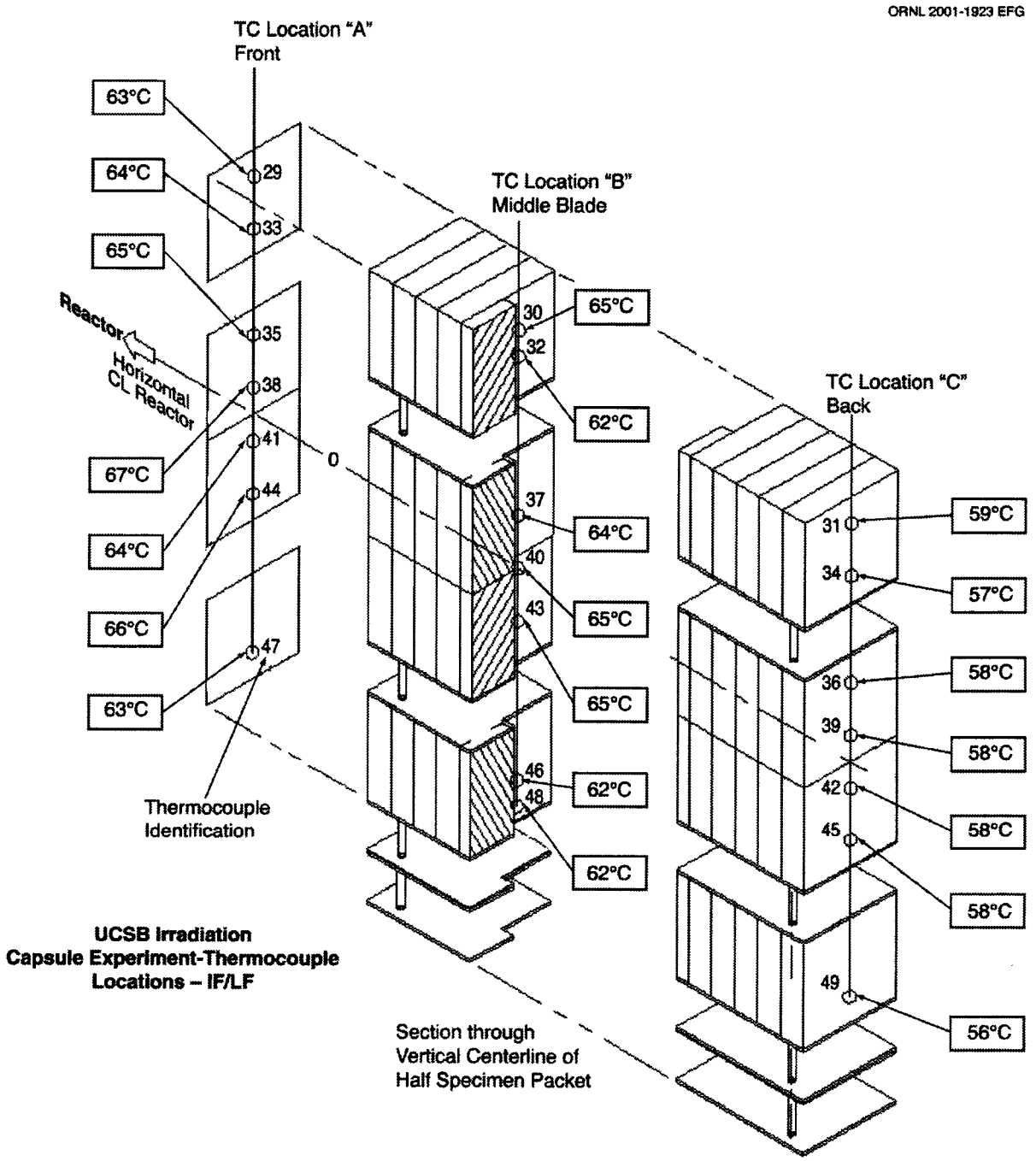

Fig. 10. Heater plate and blade thermocouple temperatures (°C) for gamma heating only in the IF/LF region of the HSSI-UCSB facility.

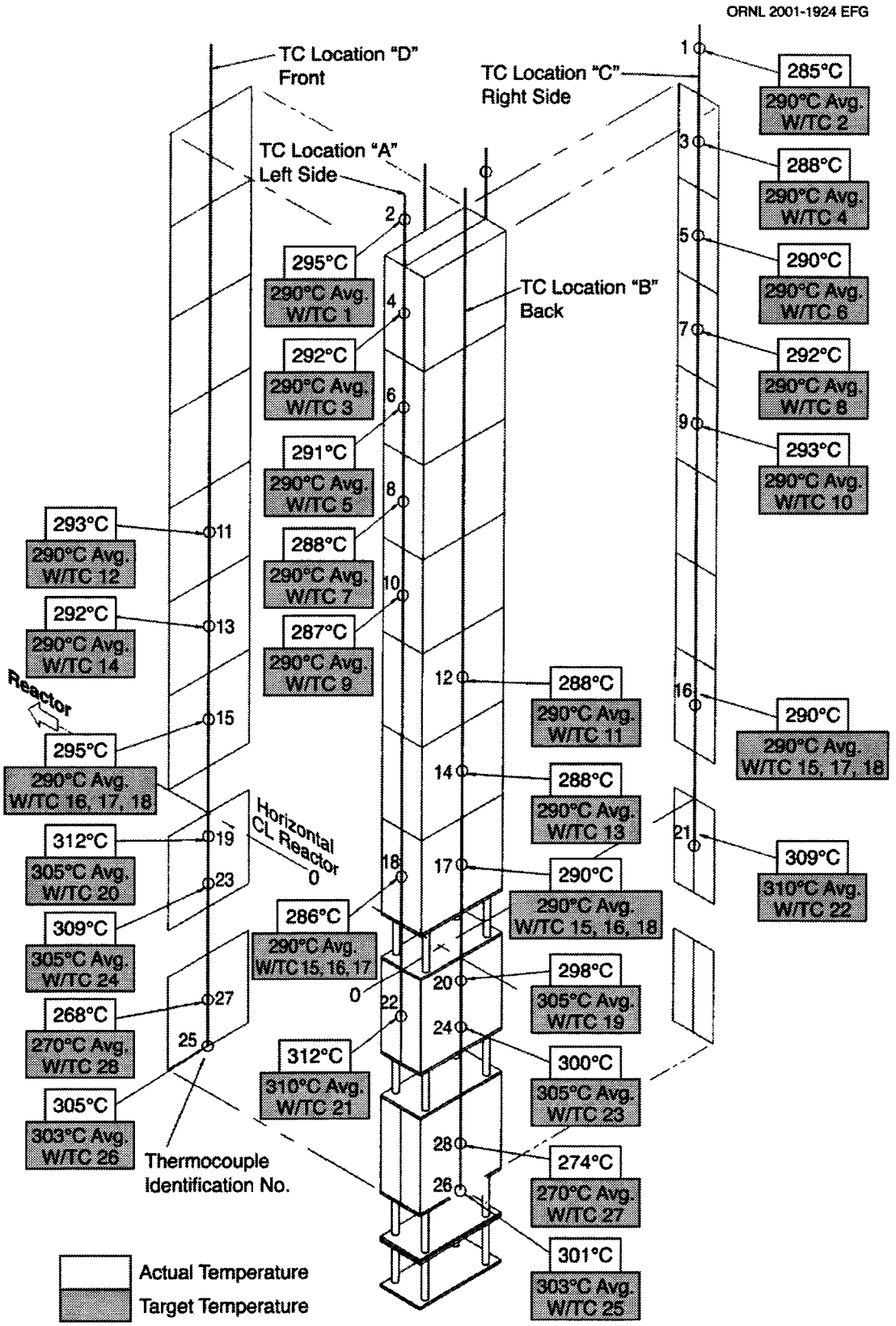

Fig. 11. Temperature distribution in the HF region of the HSSI-UCSB facility.

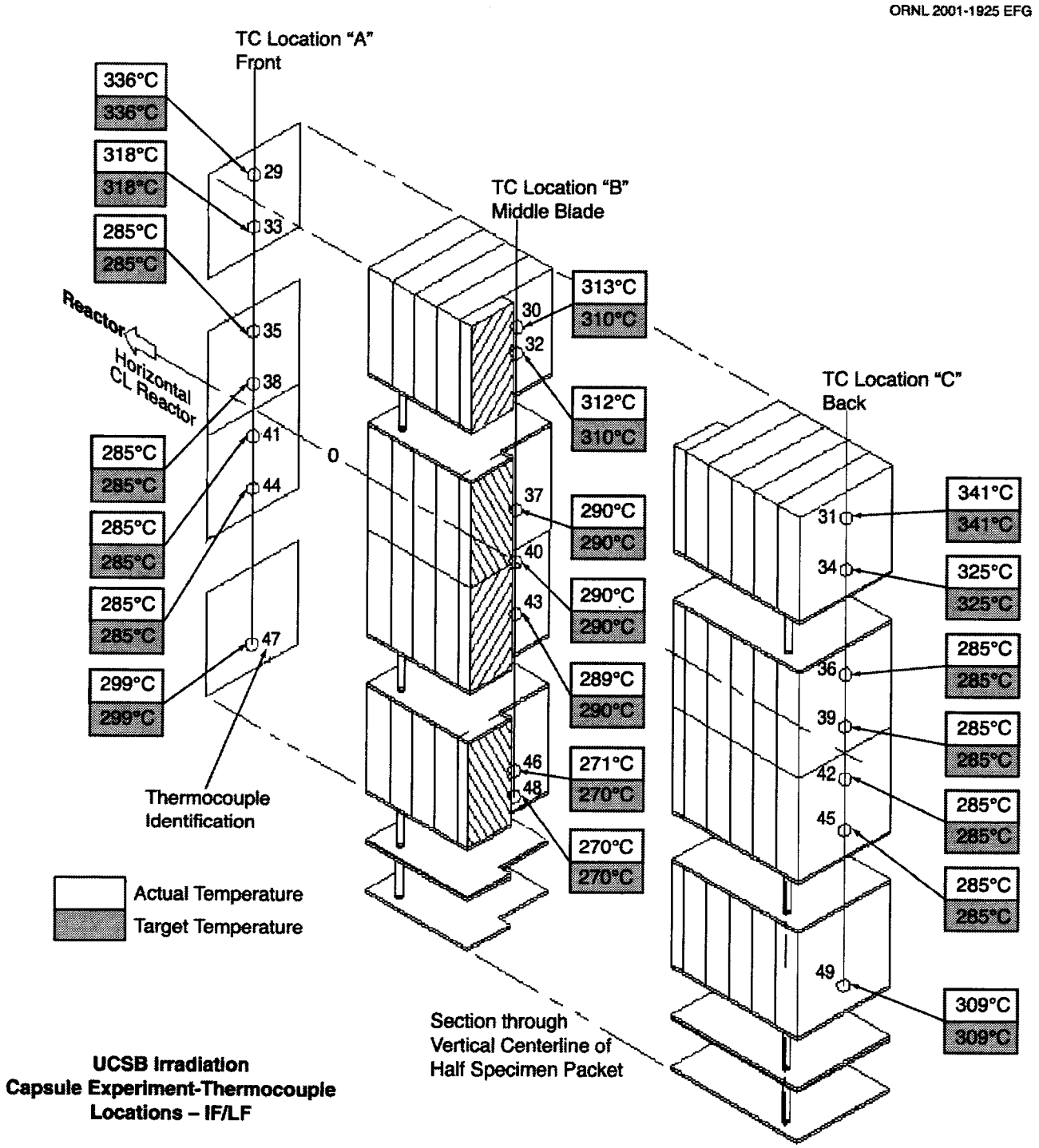

Fig. 12. Temperature distribution in the IF/LF region of the HSSI-UCSB facility.

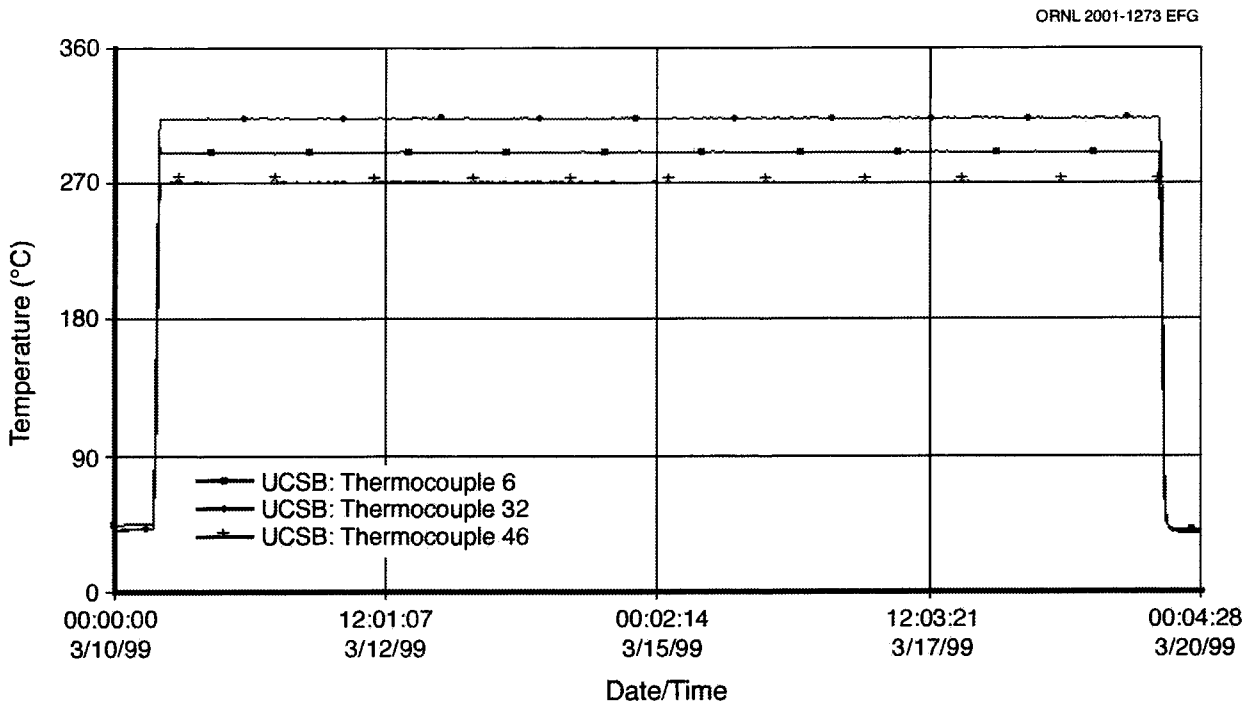

Fig. 13. Thermocouple plots of three thermocouples (one from each temperature zone) in the HSSI-UCSB facility for a complete half-cycle of reactor operation.

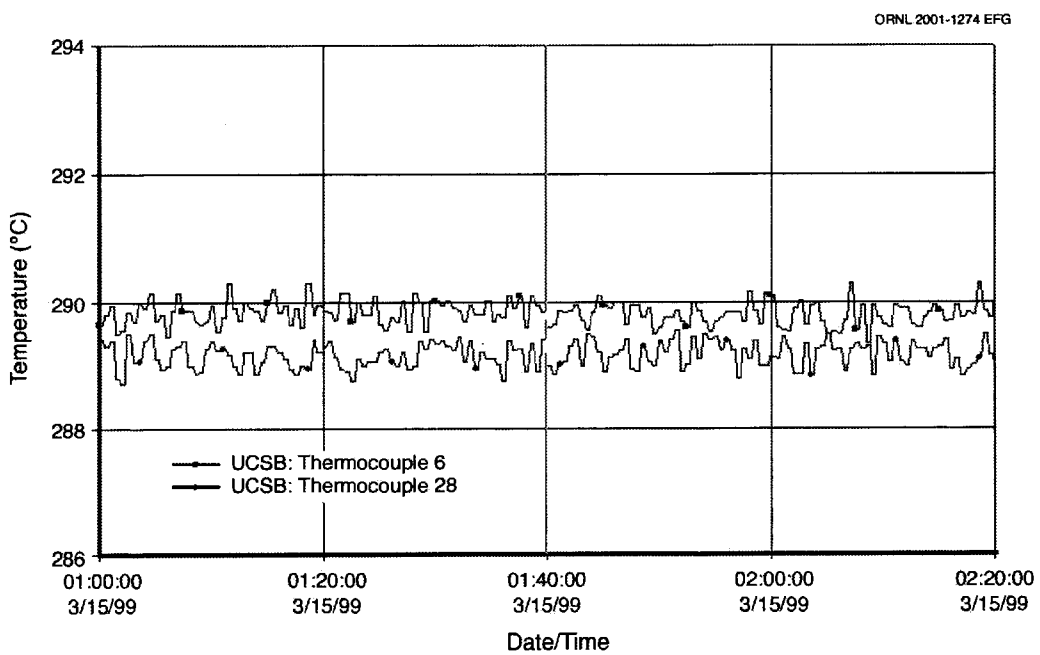

Fig. 14. Temperature plots for two thermocouples (same temperature zone) in the HSSI-UCSB facility for short period of time, indicating excellent temperature control.

thermocouples 6 and 28 in the same temperature zone for a short period during the same reactor half-cycle. Figure 14 indicates that for the 60-min period from 1 a.m. to 2 a.m. on March 15, 1999, the two thermocouples varied less than 1°C. The temperature plot in Fig. 14 looks the same regardless of which portion of the plot it is taken from in Fig. 13. This is a testament to the performance of the temperature control system, which automatically adjusts the power to each heater zone based on the temperatures read by the control thermocouples for each zone. Table 1 lists the thermocouple number assigned to be the control thermocouple(s) for each of the 25 heater zones. The target temperature for each control thermocouple was determined by the heat transfer analyses and is also shown in Table 1.

Table 1. Control thermocouples for heater zones in HSSI-UCSB facility

Heater zone	Control thermocouple(s)	Target temperature (°C)
1	Average of 1 and 2	290
2	Average of 3 and 4	290
3	Average of 5 and 6	290
4	Average of 7 and 8	290
5	Average of 9 and 10	290
6	Average of 11 and 12	290
7	Average of 13 and 14	290
8	Average of 15 and 16, 17, and 18	290
9	Average of 19 and 20	305
10	Average of 23 and 24	305
11	Average of 25 and 26	303
12	31	341
13	29	336
14	34	325
15	33	318
16	36	285
17	35	285
18	39	285
19	38	285
20	42	285
21	41	285
22	45	285
23	44	285
24	49	309
25	47	299

3.4 SPECIMEN PACKET CHANGEOUT PROCESS

The HF and the IF/LF baskets can be removed from the facility independently or together during reactor outages, and the specimen packets in the various regions of the facility can be removed and replaced according to the experimenter's irradiation plans. To perform this process some additional hardware was required. First, a holding fixture was fabricated and mounted on the side of the reactor pool. This fixture is used to hold the entire facility in a position such that the upper part of the facility is above the pool water, allowing removal of the facility top plug. Second, a cask was fabricated to hold both basket assemblies. The cask, shown in Fig. 15, can be loaded or unloaded either from the top or bottom and provides 4 in. of lead shielding around the baskets when they are loaded into it.

ORNL 2001-1926C EFG

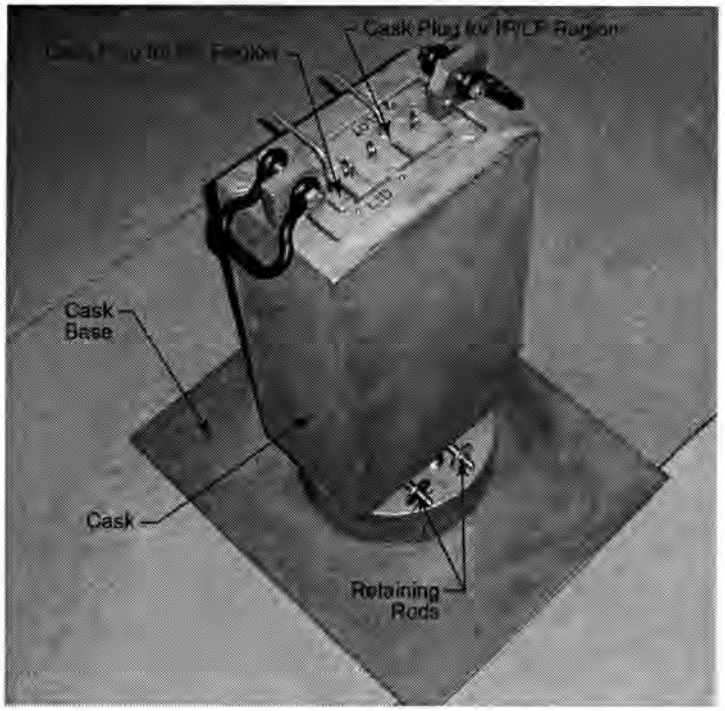

Fig. 15. Lead-filled cask used for specimen packet changeouts in the HSSI-UCSB facility.

The sequence of events for a typical changeout are as follows: (1) the facility is lifted out of the carriage assembly and placed into the holding fixture mounted to the side of the pool such that the top plug (see Fig. 3) is above the pool water; (2) the top plug is removed, and the specially fabricated cask is brought over the top of the facility; (3) cables are passed through the cask and attached to the top of the shield plugs, which are connected by removable cables to the basket assemblies in the facility; (4) the cask is lowered to the top of the facility, and the shield plugs are pulled through the cask; (5) the cask plugs are placed in the top of the cask with the cables attached to the baskets coming through slots in the top of the cask plugs; (6) the baskets are pulled into the cask, and the retaining rods are pushed through the cask to hold the baskets in the cask; (7) the loaded cask is installed onto the cask base, which provides bottom shielding; (8) the shield plugs are removed from the cables attached to the basket assemblies; (9) the cask is then brought into the hot cell facility located in a lower level of the reactor building where the baskets

are removed from the cask; (10) the baskets are opened, and individual specimen packets can be removed and new ones installed. The process is then reversed to place the facility back in the carriage assembly in preparation for further irradiation. Experience has shown that the entire specimen packet changeout process can be accomplished in about 6 h during the normal reactor outage time, resulting in no loss of irradiation time.

4. HSSI-IAR FACILITIES

4.1 FACILITY DESIGN

An HSSI-IAR facility consists of a 9-ft-tall (2.7-m) container assembly that is fabricated from 304L stainless steel, inside of which is placed the irradiation capsule containing the metallurgical specimens. The lower 24-in. (0.6-m) portion of the facility, in which the specimen-loaded capsule resides, is rectangular in shape with external dimensions of 4.52 in. (11.48 cm) wide and 4.14 in. (10.52 cm) deep. The electrical heaters for the facility are located in this area. The facility has 12 separate heater zones consisting of 3 heater zones (top, middle, and bottom) on each of the 4 sides of the facility. These heaters are used for heating the specimens inside the irradiation capsule to the desired irradiation temperature of 288°C (550°F). The same heaters can be used to heat treat the specimens up to 454°C (850°F). The heater zones are strategically placed such that varying the power from the separate heater zones can overcome the varying gamma heating rates in the capsule. This results in all specimens being at the desired irradiation temperature of 288°C. Typically, the facility is continuously swept with helium, although it is possible to use mixtures of helium and neon if necessary to achieve desired temperatures. Figure 16 shows a cross-sectional view of an IAR facility and capsule at the FNR core midplane.

The upper 84-in. (2.1-m) portion of the facility is cylindrical in shape and is 5 in. (12.7 cm) in diameter. It is open at the top and has a retaining yoke that is bolted to keep the irradiation capsule inside the facility. When the capsule is installed, the opening in the top of the facility is sealed by an O-ring on the upper flange of the irradiation capsule that is inserted into the facility.

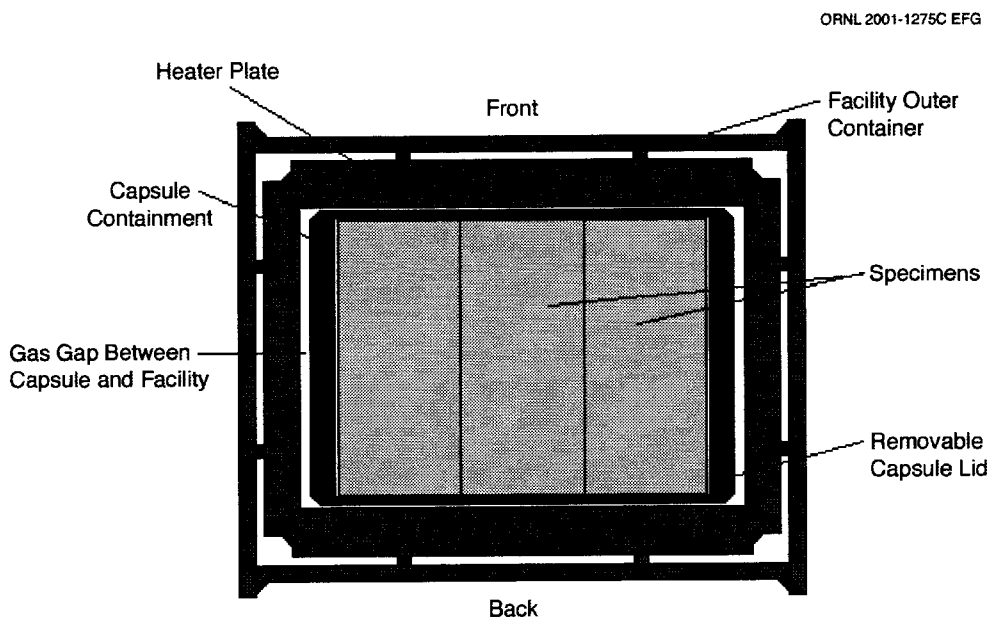

Fig. 16. Cross section through an IAR facility and capsule at FNR core midplane.

These dimensions and geometry allow the capsule in the IAR facilities to be rotated by raising it approximately 22 in. (56 cm), rotating it 180°, and lowering it back into the facility. Steel shield plugs in the upper portion of the facility provide biological radiation shielding while this task is performed.

An instrumentation lead tube is attached to the lower rear portion of the facility. This lead tube contains all of the electrical heater extension leads and gas lines necessary for controlling the irradiation environment of the specimens. The lead tube extends above the pool water and provides a dry protective housing through which the leads extend to the control instrumentation, as shown in Fig. 17.

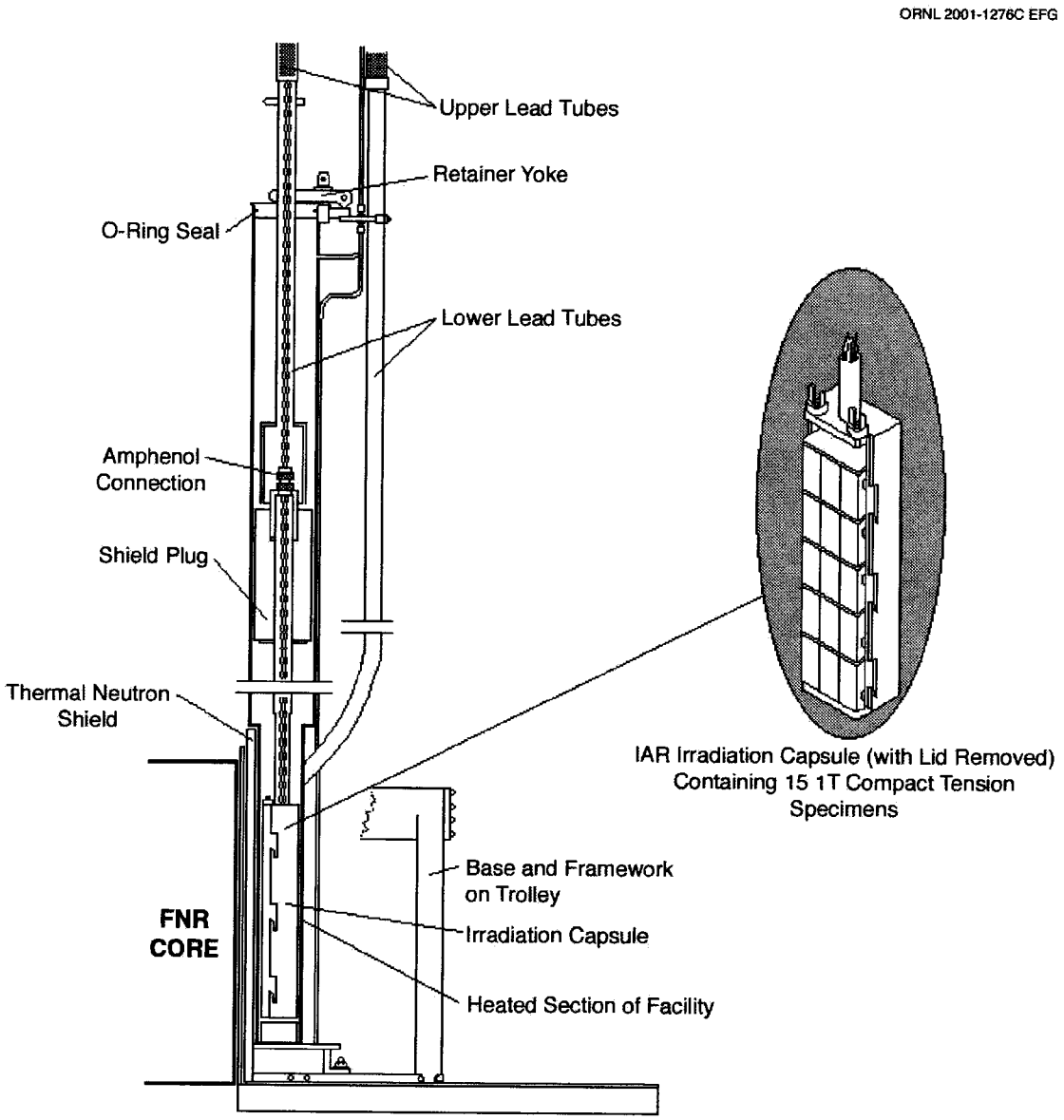

Fig. 17. Schematic of HSSI-IAR irradiation capsule and facility at east face of FNR.

4.2 IRRADIATION CAPSULE DESIGN

The lower portion of the irradiation capsule (where the specimens are located) is essentially a box that is only slightly smaller than the inside of the lower (heated) portion of the facility. This box allows the capsule to be transferred into and out of the facility but minimizes the gaps between the facility and the capsule to reduce thermal gradients within the facility. This box region of the capsule has interior cross-sectional dimensions of 3.03 by 2.40 in. (77.0 by 61.0 mm), and because the capsule can be rotated, either of the long sides can be placed facing the reactor core. To facilitate loading of specimens, one of the long sides of the box serves as a lid and is removable.

The interior of the capsule is divided into five cells by the placement of shelf plates. Each cell is 2.52 in. (64.0 mm) high, 3.03 in. (77.0 mm) wide, and 2.41 in. (61.2 mm) deep, which permits loading three 1T compact-tension specimens, or their equivalent volume of other specimens and spacers, into each cell.

The capsule contains 26 type-K thermocouples, which are 0.040 in. (1.0 mm) in diameter. Because one of the long sides of the box is removable and the other long side is only 0.045 in. (1.14 mm) thick, the thermocouples are imbedded in grooves in the two narrow sidewalls of the box and the shelf plates. To control and monitor specimen temperatures, the thermocouple-measuring junctions are located in the sidewalls and at the front, middle, and back of the shelf plates. The capsule box assembly is shown in Fig. 18; the removable cover, shelf plates, and thermocouple-measuring junction locations are identified.

A rigid lead tube extends from the top of the capsule box assembly to beyond the top of the facility. A flange on the upper portion of this lead tube contains an O-ring that seals the opening in the top of the irradiation facility when the capsule is inserted. The rigid lead tube is then attached to a flexible instrumentation lead hose that carries the thermocouple extension leads to the instruments that monitor and control the experiment.

4.3 INSTRUMENTATION AND CONTROL SYSTEM

The instrumentation and control system is used to provide gas flow to the facilities, monitor temperatures, and control the electric heaters. An instrumentation application diagram of the HSSI IAR-1 facility is shown in Fig. 19. The facilities currently operate with 100% helium sweep gas; however, it is possible to use mixed gases, such as neon and helium, to aid in temperature control. The gas flow rate is maintained at about 150 sccm and 2 psig (14 kPa). Relief valves set at 13 psig (76 kPa) are located on the inlet and exit lines of each facility to ensure that overpressurization does not occur. Electrical power (on the order of 3 to 5 kW per facility) is supplied to the electrical heaters to maintain specimens within the facilities at 288°C.

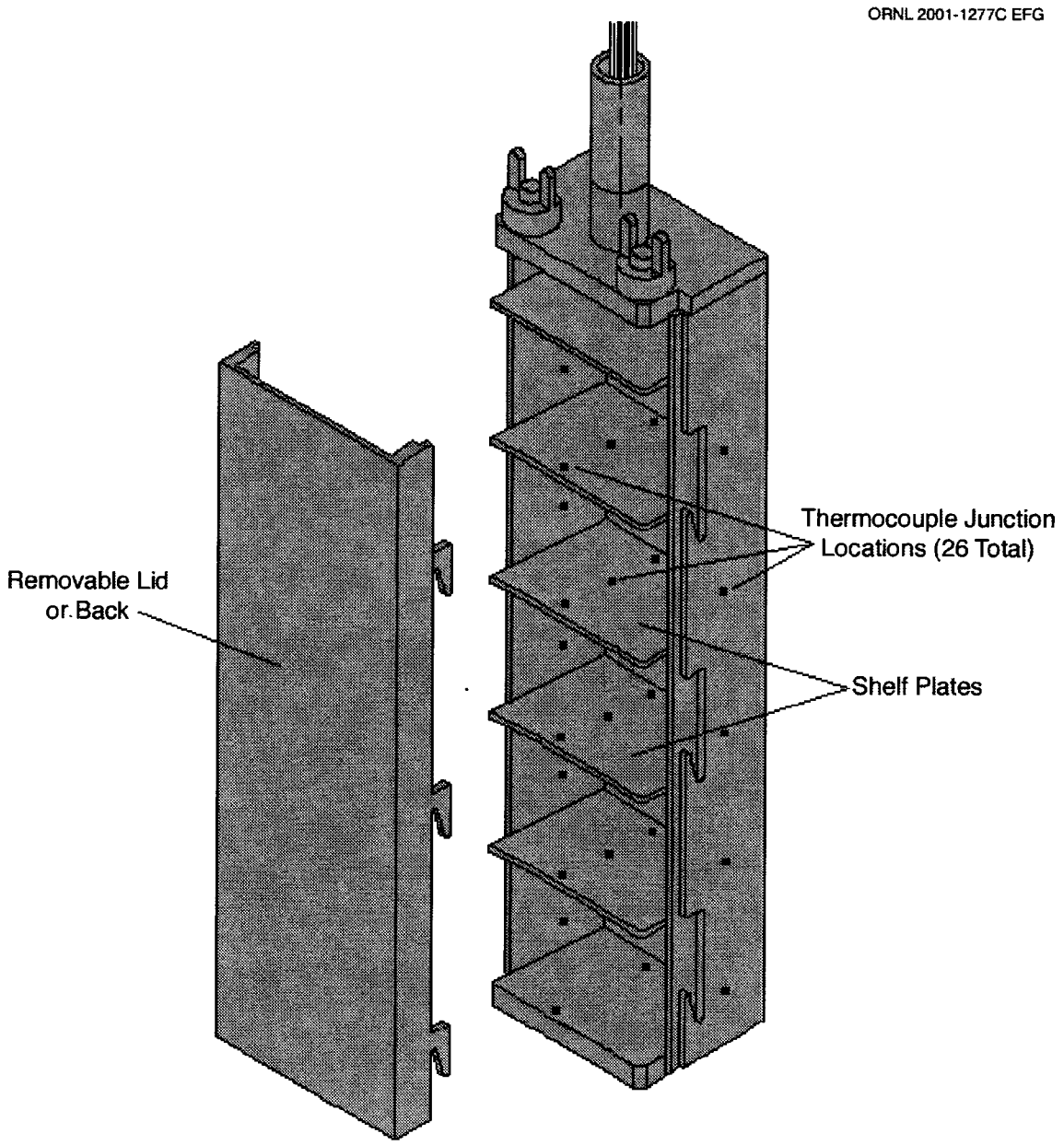

Fig. 18. Shelf plate and thermocouple locations in the HSSI-IAR irradiation capsule.

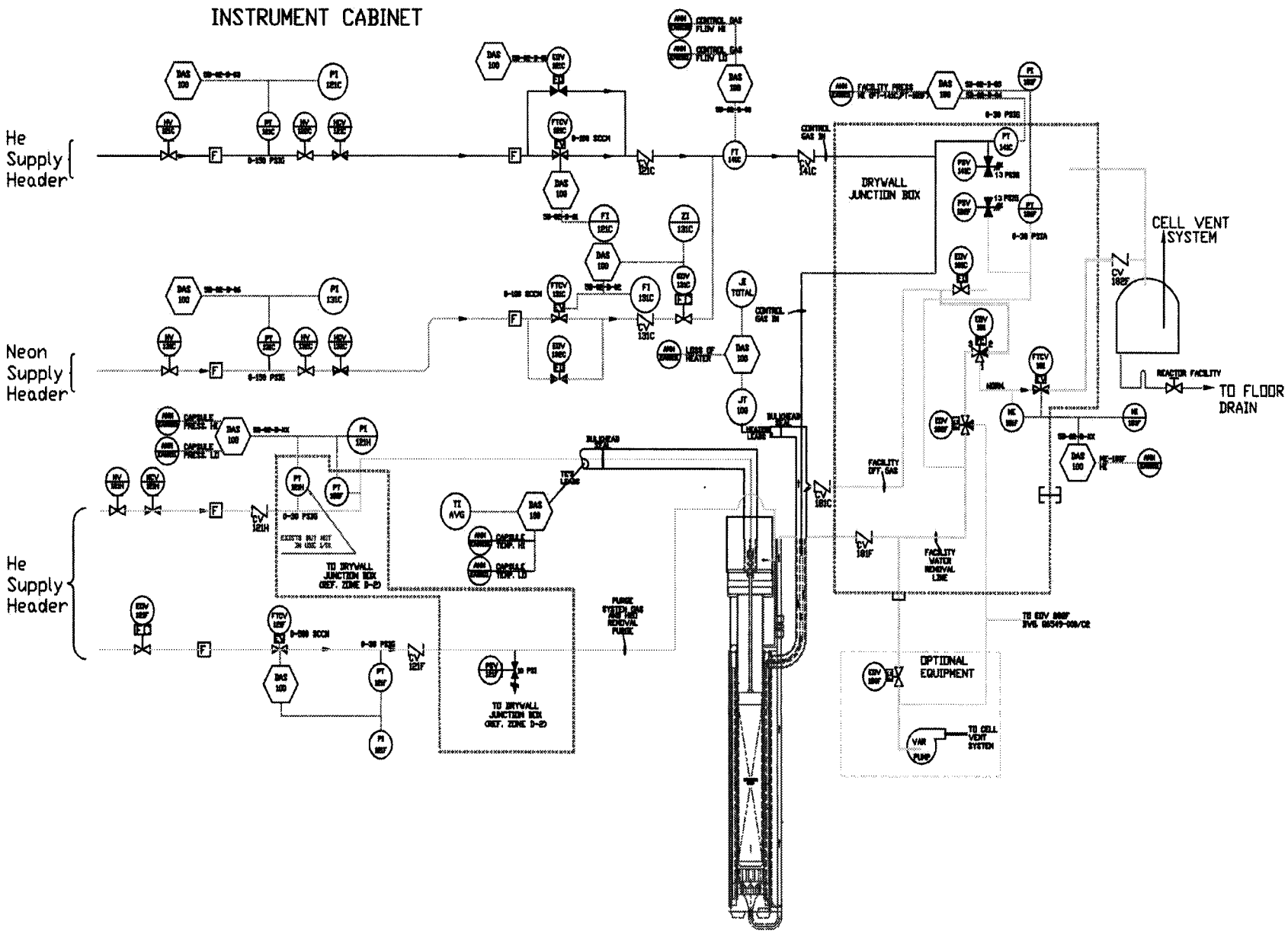

Fig. 19. Instrument application diagram for HSSI-IAR facility.

The main control system for the HSSI IAR-1 and IAR-2 facilities consists of a single distributed control system (DCS). The controller is a μDCS-Plus manufactured by Azonix Corp. This system is currently monitoring more than 100 alarms and is controlling 50 proportional, integral, and derivative (PID) loops; 75 discrete functions; and more than 300 input/output (I/O) points. The μDCS-Plus scans this information once per second and records this information on a local server every 20 s. Once every three days the data are sent over the local network to a server storage system at ORNL.

The main control system for these two facilities uses stand-alone architecture that requires no host or remote system except for an MMI. The MMI is used for information or program modifications only. Modification can be made at any time without impacting the control and monitoring capabilities of the system. Modifications can be made using a modem or via the Internet with the proper access codes and software. The controller uses embedded software with menu-driven routines with on-line diagnostics, which checks the software before the change is implemented. The μDCS-Plus is factory hardened to be used in an industrial environment. The enclosure is sealed, and the program resides on a 40-MB Flash disk. The controller uses no moving parts that can wear out. This enclosure also provides the system with excellent immunity from electromagnetic and radio-frequency interference. The environment around the controller as well as the I/O can be 95% relative humidity (noncondensing) with a temperature up to 60°C.

The system allows the facilities to be monitored and operated either on site or remotely from anywhere in the world by using a remote key and the proper password. The number of computers that can access the data is limitless with the proper key, password, and software. The remote communications consist of a modem for phone line access and a network card for Internet access. The experimenter has the capability to view and obtain real-time data 24 h/d. Figure 20 shows the Internet-accessible screen that displays real-time operating data for both IAR facilities.

The control system for the HSSI-IAR facilities is versatile and possesses one of the highest mean time between failure (MTBF) values (10 years) in the industry. With its Pentium-class CPU, it is one of the industry's better control systems, with capabilities for monitoring and controlling more than 256 PID loops per second with 0.05% accuracy. The expansion capabilities for this system are limitless with appropriate hardware and software.

4.4 SPECIMEN EXCHANGES AND ROTATION

A unique feature of the HSSI-IAR facilities is that the irradiation capsule is instrumented with thermocouples that are located within the complement of specimens in the irradiation capsule. However, it is still possible to transport the capsule assembly to the FNR hot cells for specimen transfers and rotations. A multipin connector, which is protected by a specially designed rigid capsule lead-tube joint, allows the lower 6 ft (1.83 m) of the irradiation capsule to be detached from the instrumentation. The lower half of the connector is fastened rigidly to the lower portion of the irradiation capsule. The upper half, with flexible extension leads, protrudes from the upper rigid

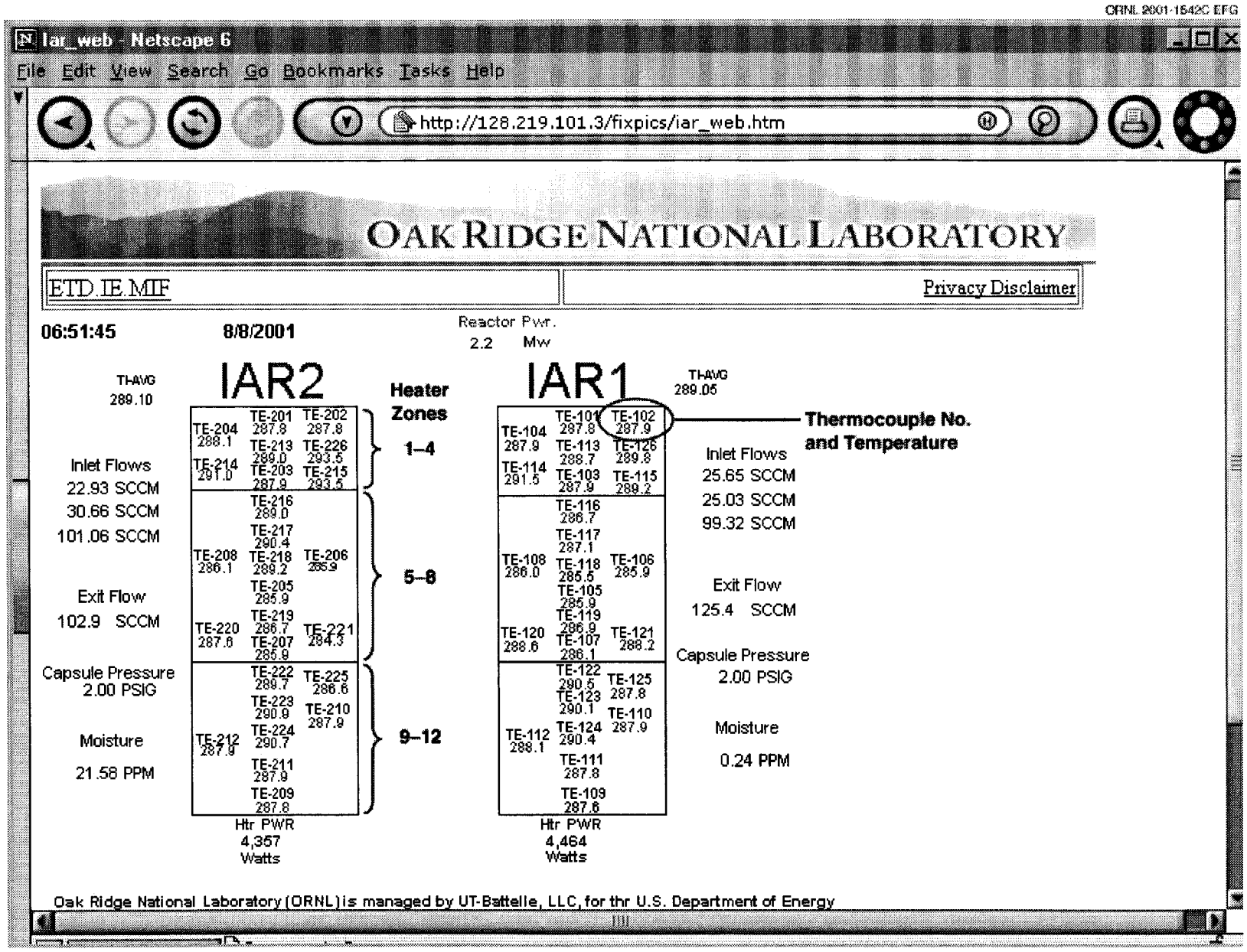

Fig. 20. Internet-accessible screen showing real-time operating data for the HSSI-IAR facilities.

portion of the instrumentation lead tube. When installed, the connection is surrounded by a split clamp and retainer can cover that provides a rigid and nonrotating joint between the upper and lower sections of lead tube that connect the irradiation capsule to the instrumentation facility.

By detaching the irradiation capsule from the instrumentation lead tube, the 6-ft-long (1.83-m) lower portion of the irradiation capsule can be transferred to the FNR hot cells inside a specially designed lead-shielded transfer cask. The cask was designed so that it can be loaded through the bottom while over the reactor pool and can be unloaded from a special opening in the side when in the hot cells. The capability of unloading the cask out the side in the hot cell was necessary because low headroom space in the cell would not allow the 6-ft-long section of the capsule to be unloaded through the top of the cask. A photograph of the cask with the side opening removed is shown in Fig. 21. The sequence of steps required to get the specimen container to the hot cell is shown in Fig. 22. The entire process also can be viewed in a 15-min video on the Web at http://www.ms.ornl.gov/programs/hssi/ hssi.htm and clicking on the second link under Task 6.

After the capsule is removed from the cask in the hot cell, the lid can be removed from the irradiation capsule; this allows the specimens to be removed, rotated, shuffled, or replaced as shown in Fig. 23.

ORNL 2002-0059 EFG

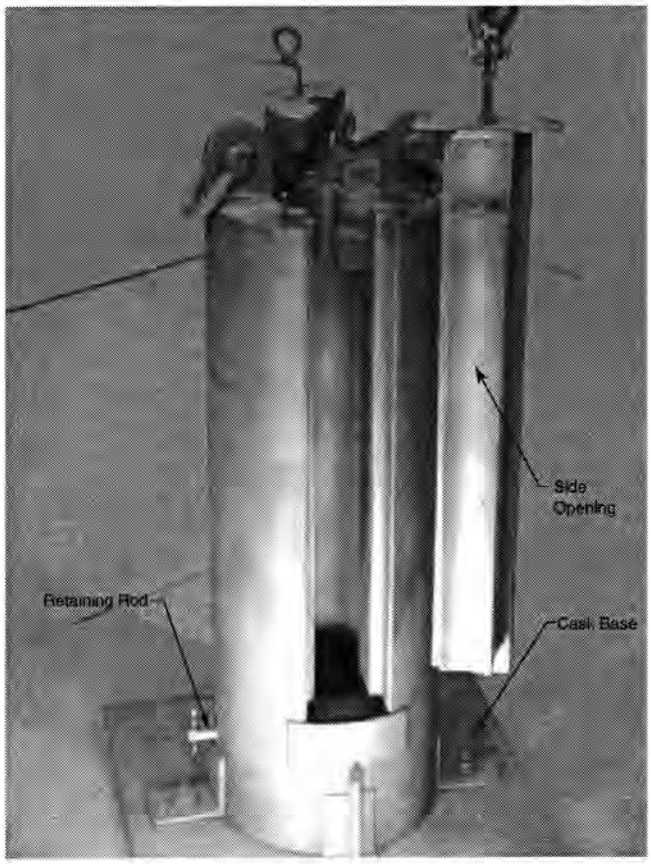

Fig. 21. Transfer cask used for specimen changeouts in the HSSI-IAR facilities.

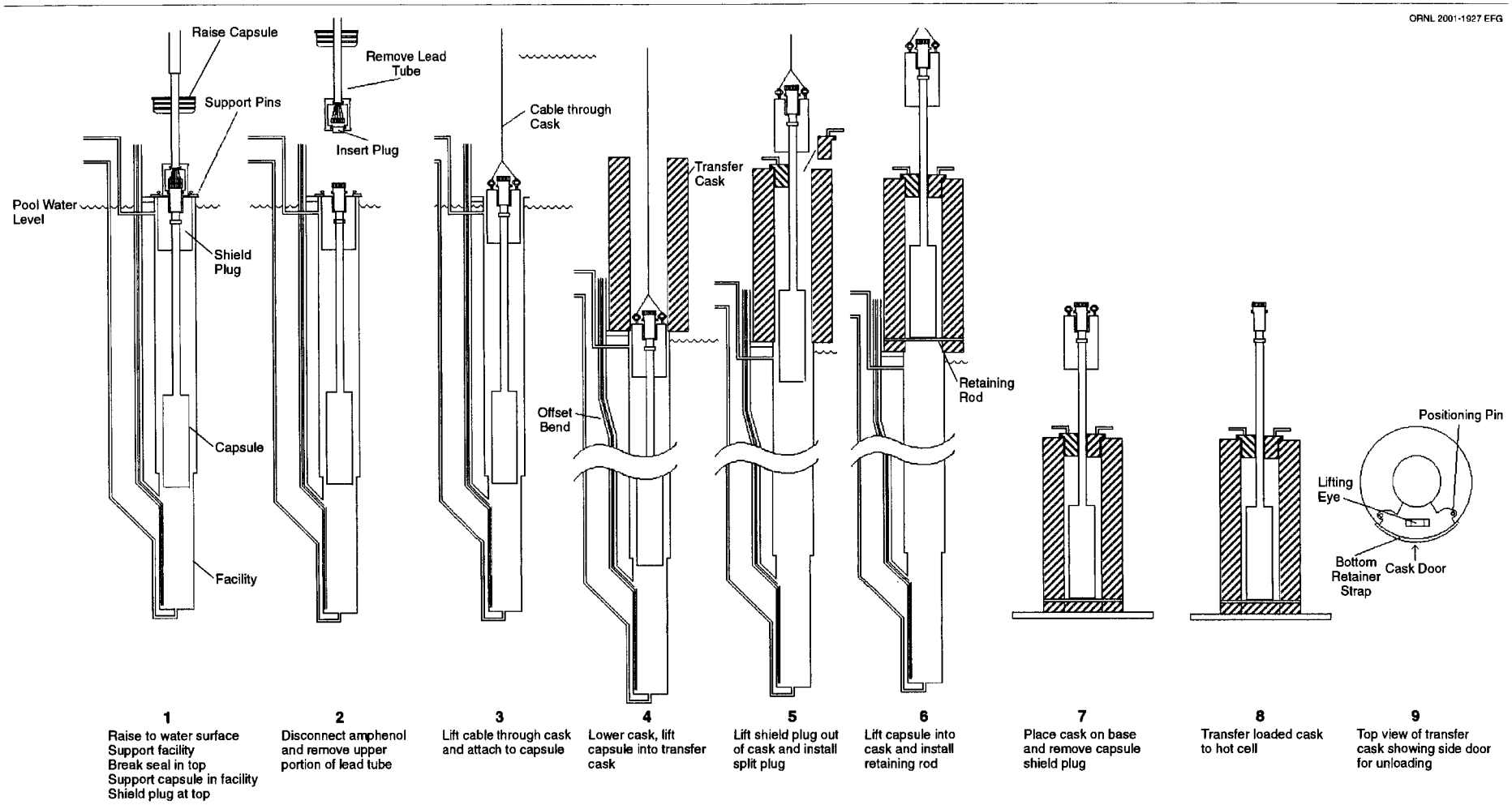

Fig. 22. Sequence of steps to transfer the specimen container to the hot cell.

Fig. 23. Changeout of specimens in IAR capsule at FNR hot cell.

The removable lid has tapered "ears" on the sides that allow it to fit tightly against the specimens when installed, but it also allows lid removal by simply unlocking two latches and sliding it up and toward the top of the capsule as shown in Fig. 24.

This feature of the capsule makes it possible to install new or preirradiated specimens into the capsule. This new and unique design requires no cutting or grinding operations to retrieve irradiated specimens. All capsule hardware is reusable, and materials transported from site to site are limited to specimens and dosimeters. Because specimens can be shipped from the irradiation site (FNR) to the testing site (ORNL) inside certified casks with over-packs, routine shipping and receiving procedures can be used.

4.5 OPERATION

To control the temperatures of specimens undergoing irradiation inside the IAR facilities, 12 of the 26 permanently installed thermocouples in each IAR capsule were chosen to be the control

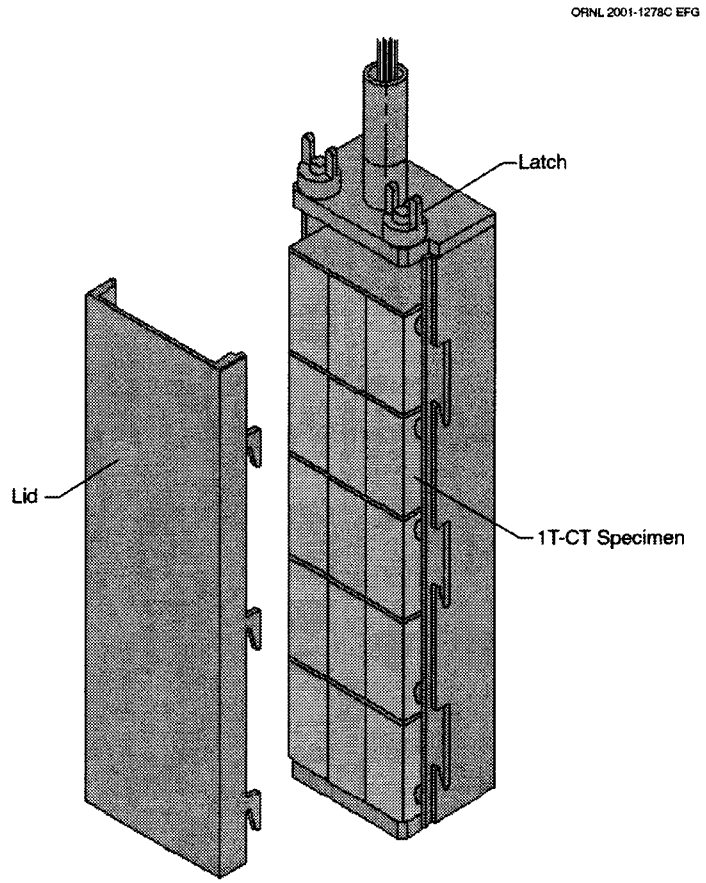

Fig. 24. HSSI-IAR irradiation capsule with lid removed and loaded with 15 1T compact-tension specimens.

thermocouples for the 12 heater zones in each IAR facility. Signals from the control thermocouples are sensed by heater controllers that increase or decrease the current applied to the electrical heaters inside the facility. This has proved to be a very successful method of temperature control. While it is possible to control the facilities between 200°C and 450°C, the initial use of the facilities is to irradiate pressure vessel steels (which in power reactors operate at 288°C), so the desired operating temperature is presently established to be 288 ± 5°C. During the temperature characterization tests and with ongoing irradiations, it has been shown that all specimens inside the irradiation capsule can be maintained at temperatures within the range of 283°C to 293°C. In fact, most of the thermocouples in both of the IAR facilities measure temperatures within ±2°C of the desired 288°C irradiation temperature.

Operation of the IAR facilities at temperature usually begins shortly after the reactor has been operating steadily at full power (2 MW) for at least 1 h. During a typical startup of the irradiation facilities, electrical power is established to the heater controllers in the instrumentation facilities by touch controls on the HSSI computer screen. Using the same computer touch screen, the control system is then placed on "automatic," which applies a target value of 288°C to each of the controllers that supply electrical power to the heaters in the facility. As the facilities are heated to the target value (desired operating temperature), the heater controllers receive signals from the control thermocouples in the irradiation capsule and reduce the current supplied to the heaters in the facility. After the irradiation facilities are heated electrically to the desired temperature, FNR personnel

"crank" the facilities against the east face of the core to continue irradiation of the specimens within the irradiation capsule. At the reactor face, additional specimen heating, in the form of gamma heating from the FNR core, causes the control system to reduce the electrical power necessary to achieve desired temperatures. The desired operating temperature is maintained in this manner until the facility is shut down at the end of the reactor operating cycle.

4.6 THERMAL AND NEUTRONIC CHARACTERIZATION

Thermal and neutronic characterization of the HSSI-IAR facilities was performed during the first two reactor half-cycles after installation. During these tests, the irradiation capsules were loaded with 15 dummy 1T compact-tension specimens that had been drilled for insertion of 9 flux gradient wires, 2 fission radiometric sets, and 3 sacrificial thermocouples. A photograph of an irradiation capsule with its dummy specimen complement is shown in Fig. 25. The gradient wires and fission radiometric sets were flux monitors to measure and map the flux in the different areas of the facilities. Using the results of the dosimetry and neutron transport calculations, a full characterization of the neutron field in each of the facilities can be found in Ref. 1.

Three sacrificial thermocouples were placed in each irradiation capsule in addition to the 26 thermocouples that are permanently installed in the irradiation capsule walls and shelf plates. The thermocouples were considered sacrificial because they were only used for temperature characterization and were removed when the first metallurgical specimens were installed into the capsules. The three sacrificial thermocouples were inserted into holes drilled into three of the dummy

ORNL 2001-1928C EFG

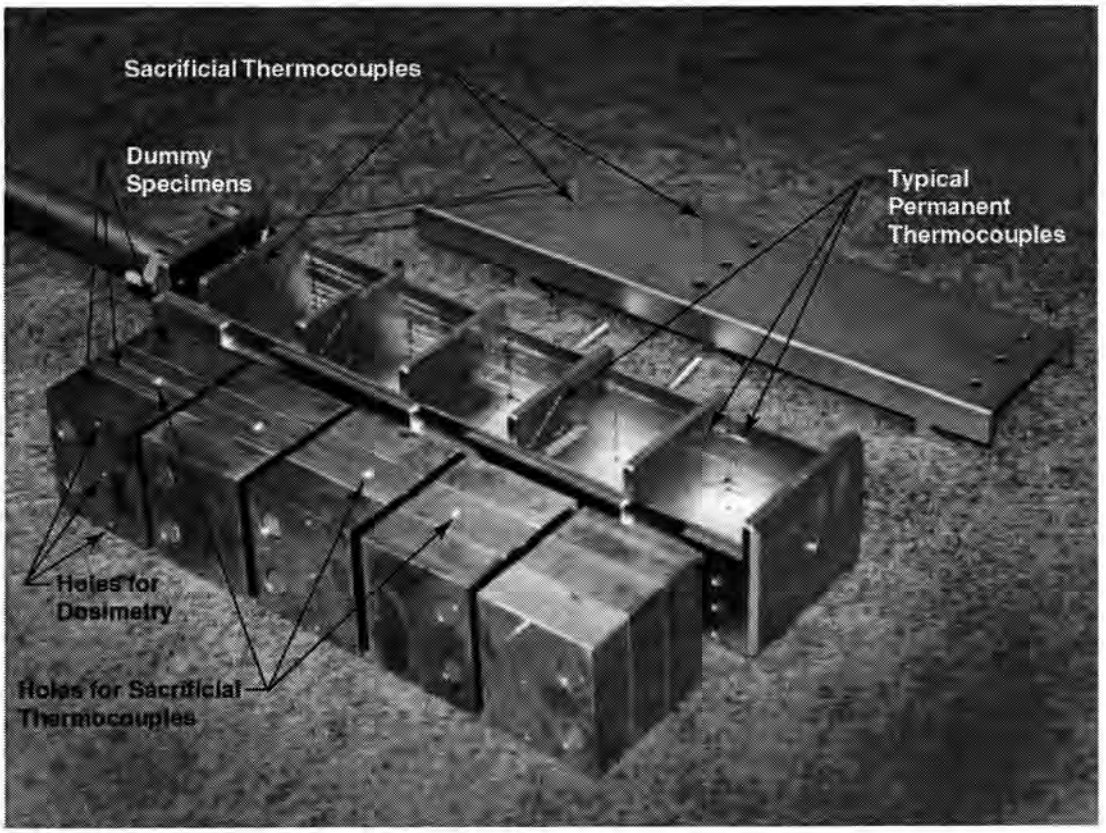

Fig. 25. Irradiation capsule loading used for thermal and neutronic characterization.

specimens in each irradiation capsule. The dummy specimens that contained the thermocouples were the middle specimen in the first, third, and fourth cell from the top of each capsule. The thermocouple hole location and depth made it possible to locate the three sacrificial thermocouple junctions in the center of the dummy specimens. This location allowed measurement of the temperature gradient across the specimens from the front to the back of the irradiation capsule as well as from the center of the middle specimens to the edge of the outer specimens. The metallurgical specimens to be tested would be damaged if they contained holes for insertion of thermocouples; therefore, the characterization tests were conducted with dummy specimens. Each group of metallurgical specimens to be irradiated, however, will contain flux monitors that are placed in the notches of the specimens to verify the fluence levels to which they are irradiated.

During the initial startup of the facilities (with the dummy 1T specimens installed and with IAR-1 in the north position, IAR-2 in the south position, and the HSSI-UCSB facility between them), a series of thermal characterization tests was performed. In Fig. 26, the thermocouple temperatures for the gamma heating only (no electrical heat) test in the north facility (IAR-1) are presented. The 1T specimens are not shown in the figure so that thermocouple locations can be shown. Thermocouples 27, 28, and 29 were the sacrificial thermocouples inserted into the midplane of the center 1T specimen in the first, third, and fourth cell from the top of the capsule. Figure 27 illustrates the same information for the south facility (IAR-2). The front-to-back, top-to-bottom, and side-to-side temperature gradients that were induced by the gamma heating rate profiles can be seen in these figures. The south facility has less total gamma heat because it is located on the southeast corner of the reactor and is in a lower gamma heating rate area than is the north IAR facility.

Subsequent to the gamma-heat-only tests and with the facilities still against the face of the reactor, electrical power was applied to the heaters, and the facilities were brought to desired operating temperatures. The resultant thermocouple temperatures for this test are shown in Figs. 28 and 29 for the north and south facilities, respectively. As can be seen in these figures, almost all thermocouples are within ±2°C of the desired operating temperature of 288°C, including the sacrificial thermocouples (27, 28, and 29) imbedded in the dummy specimens. The facilities continued to operate at design temperature for the remainder of the half-cycle.

To begin the second half-cycle of characterization tests, the facilities were started up as they would be during routine operation. Electrical power was applied to the heaters to bring the facilities to desired operating temperatures, and then they were moved against the face of the reactor. When the facilities are moved against the reactor face, the electrical heat controllers sense the additional gamma heat through the control thermocouple signals and reduce the electrical current supplied to the heaters to maintain the proper operating temperature. There are no measured temperature changes in the capsule as a result of moving against the face of the reactor. The total amount of power supplied by the electrical heaters is simply reduced by the heater controllers. Figure 30 shows the level of electrical heat input into the two IAR facilities from initial heatup until being fully against the reactor core. Initially about 6.5 kW is applied to begin heatup of the facilities. As the desired temperatures are approached, the heat input is automatically reduced, and in Fig. 30 one can see that ~5.7 kW of heat input was necessary in each facility to maintain the desired operating temperature in the withdrawn position. After insertion, the total electrical power input to the north facility (IAR-1) was reduced to ~3.6 kW, and the total electrical power input to the south facility (IAR-2) was reduced to ~4.8 kW. The final total power after insertion may vary as much as 10 to 15%, depending on the fuel loading for a given reactor cycle. The south facility always requires more electrical

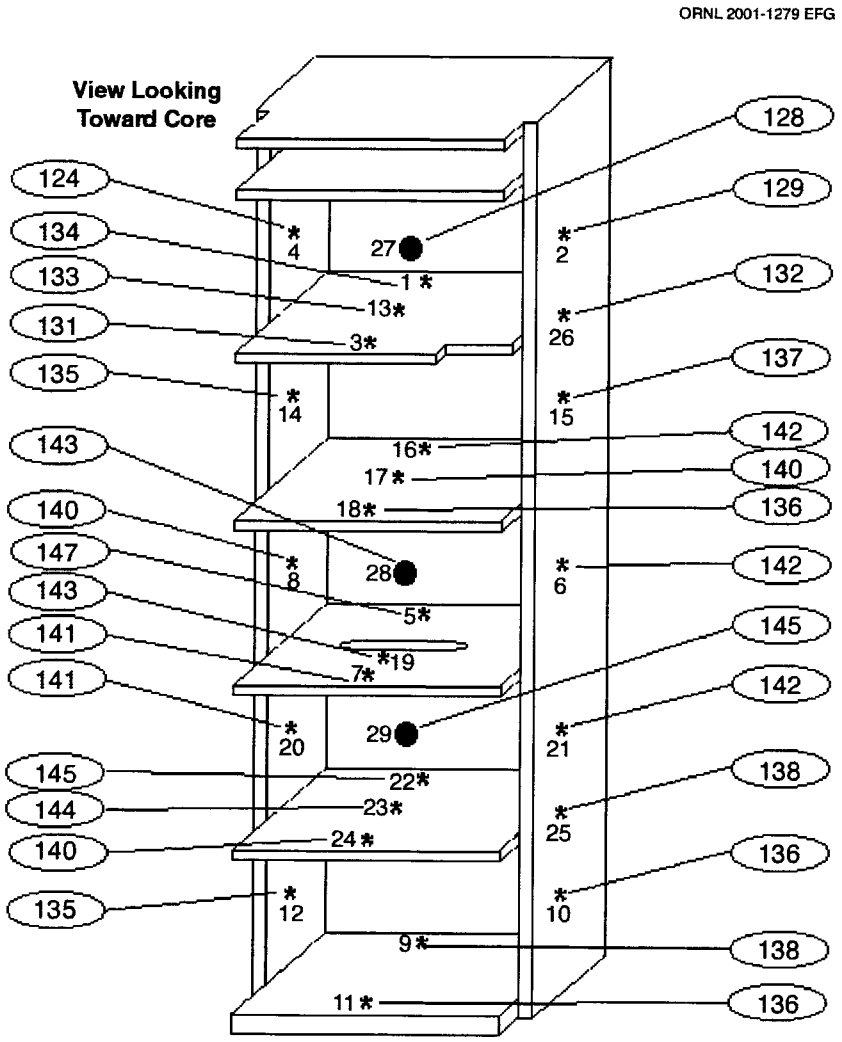

Fig. 26. Thermocouple temperatures (°C) for gamma heating only in the north facility (IAR-1). The reactor power is 2 MW with 100% helium and no electrical heat.

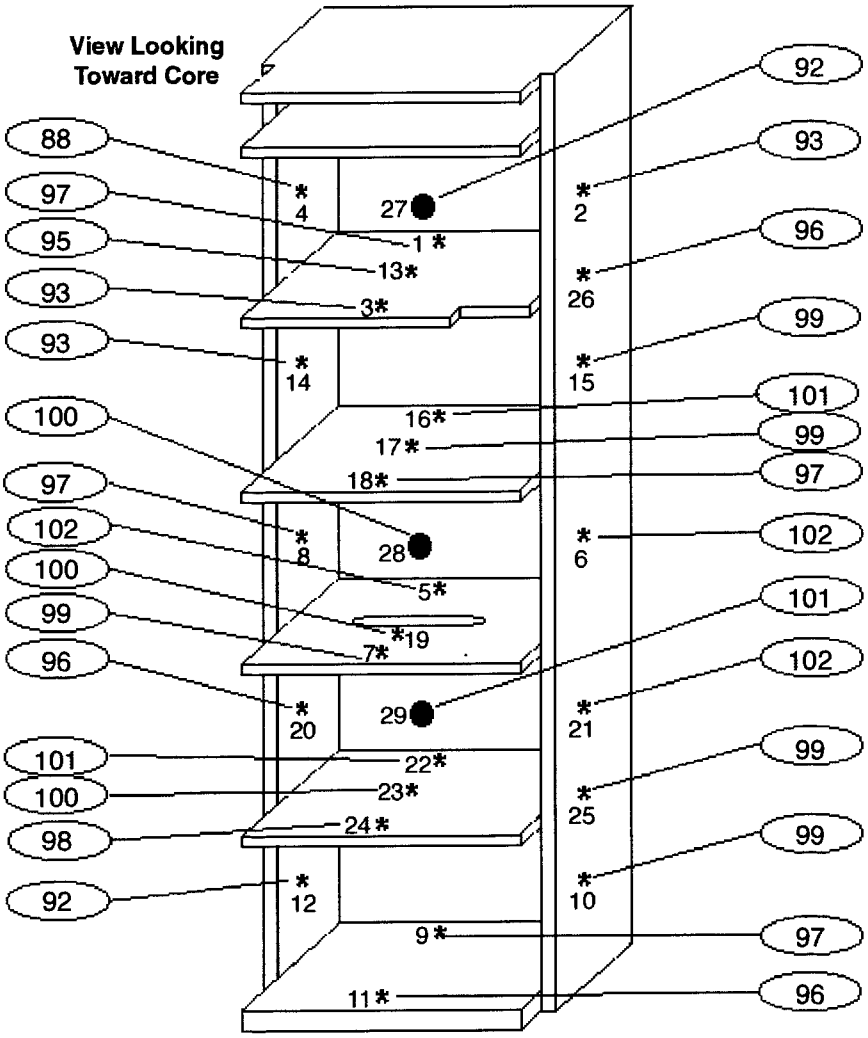

Fig. 27. Thermocouple temperatures (°C) for gamma heating only in the south facility (IAR-2). The reactor power is 2 MW with 100% helium and no electrical heat.

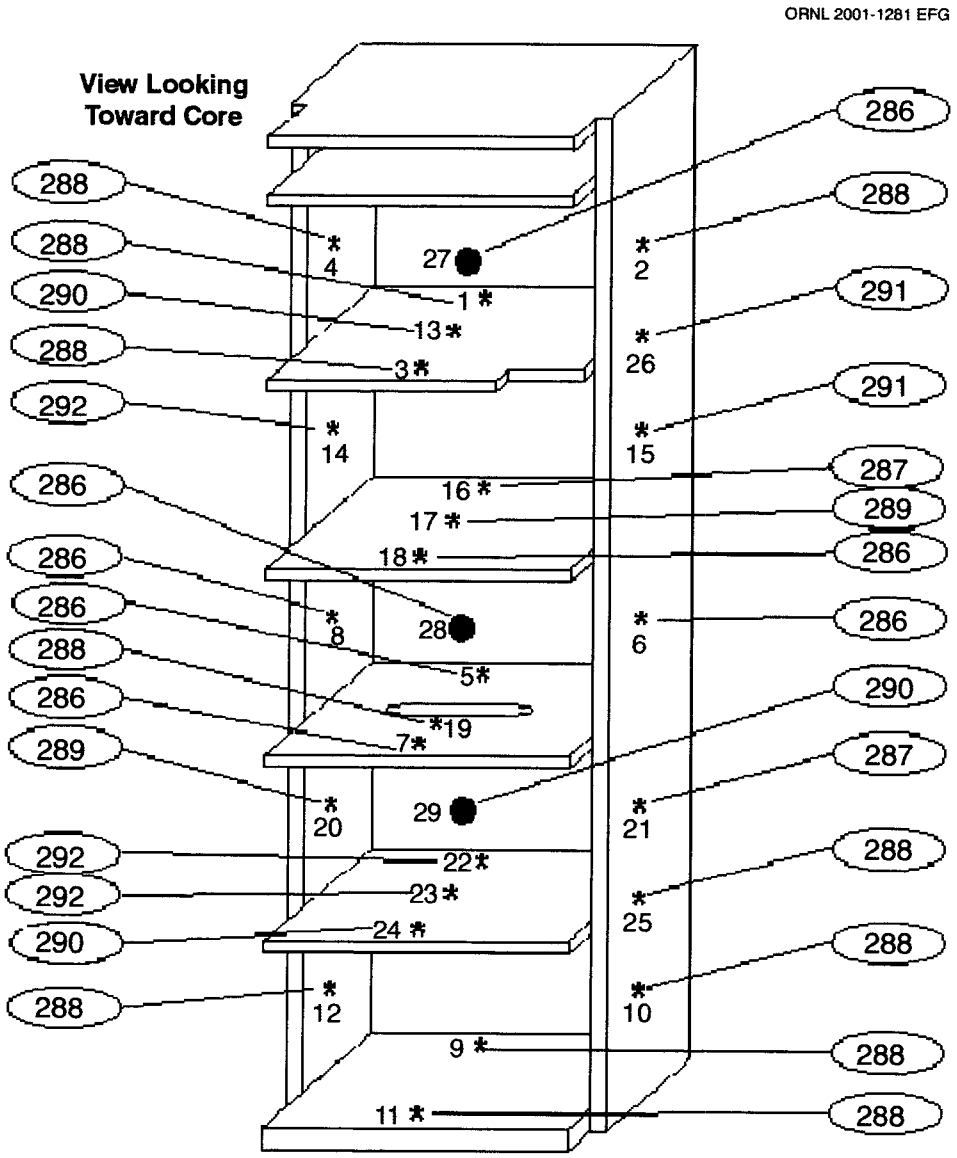

Fig. 28. Thermocouple temperatures (°C) with 3910 W of electric heat applied to the north facility (IAR-1). The reactor power is 2 MW with 100% helium.

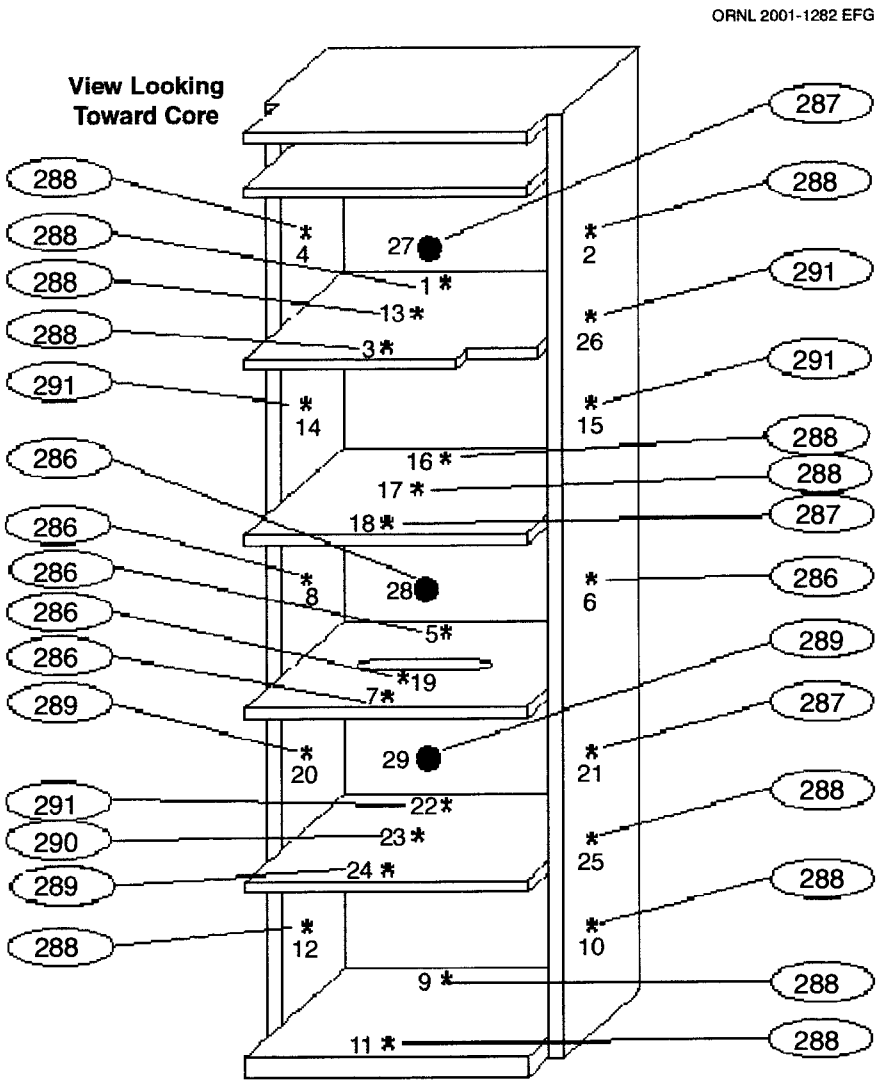

Fig. 29. Thermocouple temperatures (°C) with 5248 W of electric heat applied to the south facility (IAR-2). The reactor power is 2 MW with 100% helium.

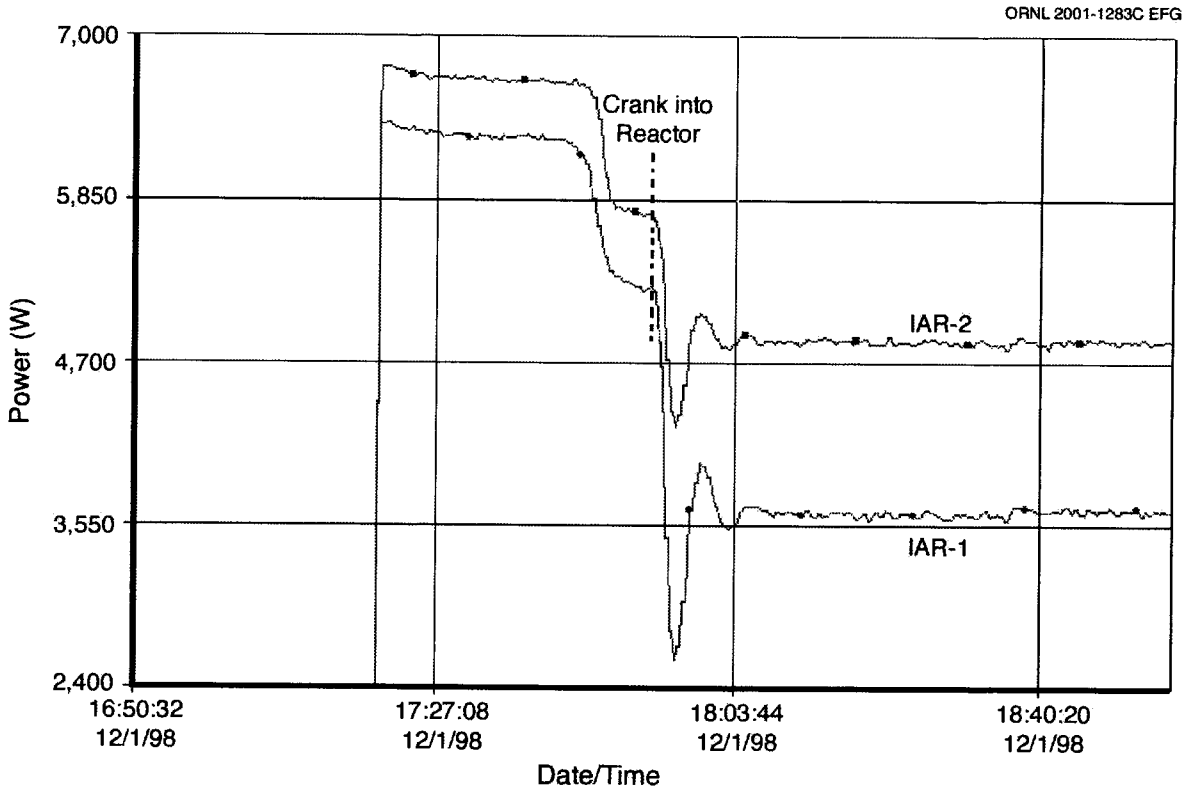

Fig. 30. IAR-1 and IAR-2 electrical heater power input before and after cranking against reactor.

power to maintain desired temperature because it is in a lower gamma heating area at the face of the core. The normal operating temperatures for the two IAR facilities are the same as those shown in Figs. 28 and 29.

After the HSSI-IAR facilities have been inserted against the reactor face for ~30 min, the outputs from the controllers become stable and tend to remain stable for the duration of the reactor cycle. Both facilities have remained stable and easy to control since they were initially installed in November 1998. Figure 31 is a plot of temperature vs time for thermocouples 1–4 in the top cell of the IAR-1 facility. The time period covered in the plot is for a 10-day reactor half-cycle that ran March 10–20, 1999. Figure 32 is an expanded view of the temperatures recorded for a short period of time taken from the plot in Fig. 31. Figure 32 indicates that for the 60-min period from 1 a.m. to 2 a.m. on March 15, 1999, none of the four thermocouples measured temperatures above 289°C or below 287°C. In fact, the variation in temperature during the 1-h period was about 0.6°C. The temperature plot in Fig. 32 looks the same regardless of which portion of the plot it is taken from in Fig. 31. The HSSI-IAR facilities have exhibited excellent temperature control since they were installed.

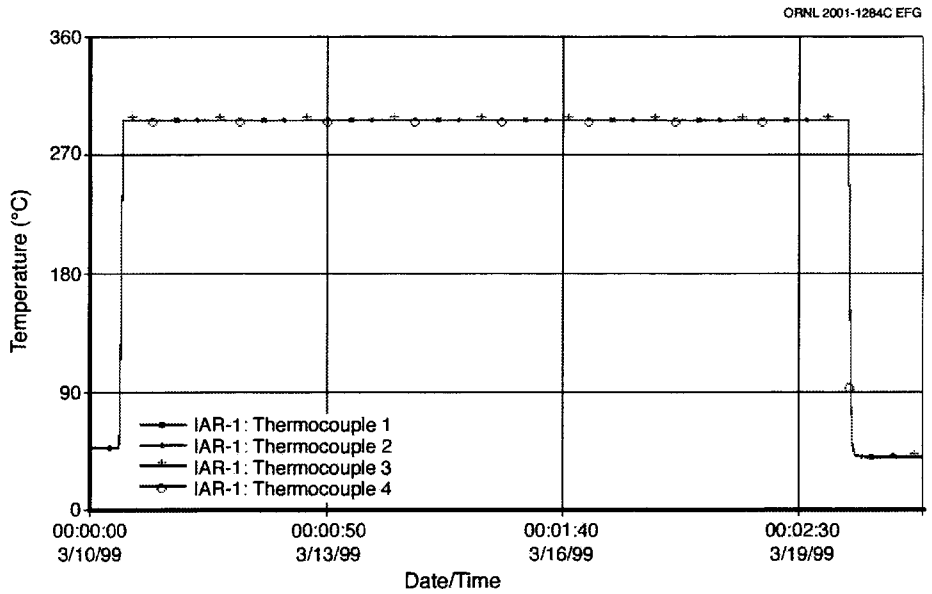

Fig. 31. Temperature vs time plot for thermocouples 1–4 in IAR-1 during complete reactor half-cycle.

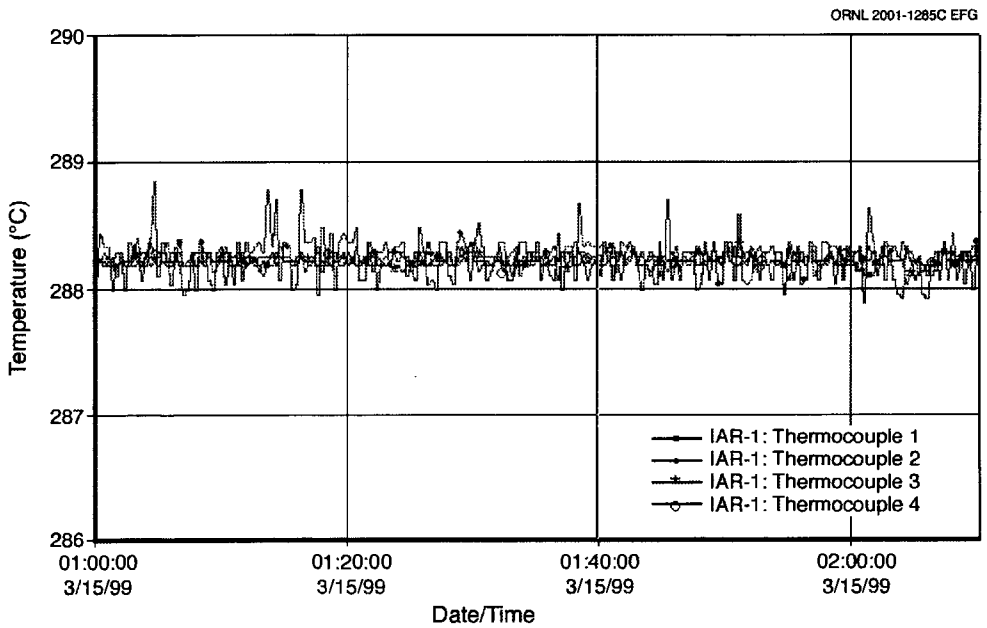

Fig. 32. Temperature vs time plot for thermocouples 1–4 in for short period of time, indicating excellent temperature control.

5. CONCLUSION

The HSSI facilities were designed and built to provide the NRC with irradiation facilities that are very flexible, dependable, and cost-effective. Their unique design requires no cutting or grinding operations to retrieve irradiated specimens. All capsule hardware is totally reusable, and materials transported from site to site are limited to dosimeters, specimens, or specimen packets. When compared with former HSSI programs, these facilities allow the reuse of numerous components and therefore greatly reduce radioactive waste generation. The turnaround time for specimen changeouts is very short (on the order of 6 hours), allowing extreme flexibility for researchers. Because only dosimeters and specimens (or specimen packets) are shipped from the FNR, shipping costs for research programs are kept to a minimum.

The facilities have been shown to provide excellent temperature control of the metallurgical specimens being irradiated. The facilities and specimen packet baskets, or capsules, are totally reusable. The irradiation baskets or capsules can be loaded with new or preirradiated specimens that can be inserted, removed, shuffled, and/or rotated at any point during the irradiation period. In the HSSI-IAR facilities the irradiation capsules can be rotated inside the facilities, and if desired the facilities can be transposed, i.e., north to south and south to north. The IAR facilities can also be used for heat-treating metallurgical specimens when it is desirable to heat-treat the entire complement of specimens. If it is desirable to heat-treat only a portion of the total specimen complement inside the capsule, the specimens can be transferred to a hot cell furnace for heat treatment while irradiation of other specimens continues.

6. REFERENCES

1. I. Remec, E. D. Blakeman, and C. A. Baldwin, *Characterization of the Neutron Field in the HSSI/UCSB Irradiation Facility at the Ford Nuclear Reactor*, NUREG/CR-6646 (ORNL/TM-1999/140). Submitted to the NRC in September 1999.

2. K. W. Childs, *HEATING 7.2 User's Manual*, ORNL/TM-12262, Oak Ridge National Laboratory, Oak Ridge, Tenn., February 1993.

APPENDIX. PUBLICATIONS LIST

The work reported here describes materials-irradiation facilities that have been designed, fabricated, and installed by the Oak Ridge National Laboratory (ORNL) Heavy-Section Steel Irradiation (HSSI) Program on behalf of the U.S. Nuclear Regulatory Commission (NRC), Office of Nuclear Regulatory Research. These facilities formed the foundation for generating the data required to provide the NRC with a thorough and quantitative assessment of the effects of neutron irradiation on the material behavior, and in particular, the fracture toughness properties of typical reactor pressure vessel (RPV) steels as they relate to light-water RPV integrity. Results generated from these irradiation experiments are being incorporated into codes and standards that are used to resolve major regulatory issues related to RPV embrittlement, such as pressurized thermal shock, operating pressure-temperature limits, and low-temperature overpressurization. These issues are of particular importance as the nuclear power-plant industry applies for licence extensions that will result in greater accumulated fluence over the lifetime of operation. As part of the HSSI program, the work listed below has enabled the NRC to reduce the uncertainty in its regulatory process with respect to RPV embrittlement, thereby in part allowing the industry to consider license renewal.

This report is a record of work performed at the ORNL under the HSSI Program, which is sponsored by the NRC Office of Nuclear Regulatory Research. A list of publications for the ORNL HSSI Program is given in Sect. A.1.

The HSSI Program includes both follow-on research and the direct continuation of work that was performed under the Heavy-Section Steel Technology (HSST) Program. Previous HSST reports related to irradiation effects in pressure vessel materials and those containing unirradiated properties of materials used in HSSI and HSST irradiation programs are listed in Sect. A.2.

A.1 HSSI PROGRAM REPORTS

1. F. M. Haggag, W. R. Corwin, and R. K. Nanstad, Martin Marietta Energy Systems, Inc., Oak Ridge Natl. Lab., Oak Ridge, Tenn., *Irradiation Effects on Strength and Toughness of Three-Wire Series-Arc Stainless Steel Weld Overlay Cladding*, USNRC Report NUREG/CR-5511 (ORNL/TM-11439), February 1990.

2. L. F. Miller, C. A. Baldwin, F. W. Stallman, and F. B. K. Kam, Martin Marietta Energy Systems, Inc., Oak Ridge Natl. Lab., Oak Ridge, Tenn., *Neutron Exposure Parameters for the Metallurgical Test Specimens in the Sixth Heavy-Section Steel Irradiation Series*, USNRC Report NUREG/CR-5409 (ORNL/TM-11267), March 1990.

3. S. K. Iskander, W. R. Corwin, and R. K. Nanstad, Martin Marietta Energy Systems, Inc., Oak Ridge Natl. Lab., Oak Ridge, Tenn., *Results of Crack-Arrest Tests on Two Irradiated High-Copper Welds*, USNRC Report NUREG/CR-5584 (ORNL/TM-11575), December 1990.

4. R. K. Nanstad and R. G. Berggren, Martin Marietta Energy Systems, Inc., Oak Ridge Natl. Lab., Oak Ridge, Tenn., *Irradiation Effects on Charpy Impact and Tensile Properties of Low Upper-Shelf Welds, HSSI Series 2 and 3*, USNRC Report NUREG/CR-5696 (ORNL/TM-11804), August 1991.

5. R. E. Stoller, Martin Marietta Energy Systems, Inc., Oak Ridge Natl. Lab., Oak Ridge, Tenn., *Modeling the Influence of Irradiation Temperature and Displacement Rate on Radiation-Induced Hardening in Ferritic Steels*, USNRC Report NUREG/CR5859 (ORNL/TM-12073), August 1992.

6. R. K. Nanstad, D. E. McCabe, and R. L. Swain, Martin Marietta Energy Systems, Inc., Oak Ridge Natl. Lab., Oak Ridge, Tenn., *Chemical Composition RTNDT Determinations for Midland Weld WF-70*, USNRC Report NUREG/CR-5914 (ORNL-6740), December 1992.

7. R. K. Nanstad, F. M. Haggag, D. E. McCabe, S. K. Iskander, K. O. Bowman, and B. H. Menke, Martin Marietta Energy Systems, Inc., Oak Ridge Natl. Lab., Oak Ridge, Tenn., *Irradiation Effects on Fracture Toughness of Two High-Copper Submerged-Arc Welds*, USNRC Report NUREG/CR-5913 (ORNL/TM-12156/V1), October 1992.

8. S. K. Iskander, W. R. Corwin, and R. K. Nanstad, Martin Marietta Energy Systems, Inc., Oak Ridge Natl. Lab., Oak Ridge, Tenn., *Crack-Arrest Tests on Two Irradiated High-Copper Welds*, USNRC Report NUREG/CR-6139 (ORNL/TM-12513), March 1994.

9. R. E. Stoller, Martin Marietta Energy Systems, Inc., Oak Ridge Natl. Lab., Oak Ridge, Tenn., *A Comparison of the Relative Importance of Copper Precipitates and Point Defects in Reactor Pressure Vessel Embrittlement*, USNRC Report NUREG/CR-6231 (ORNL/TM-6811), December 1994.

10. D. E. McCabe, R. K. Nanstad, S. K. Iskander, and R. L. Swain, Martin Marietta Energy Systems, Inc., Oak Ridge Natl. Lab., Oak Ridge, Tenn., *Unirradiated Material Properties of Midland Weld WF-70*, USNRC Report NUREG/CR-6249 (ORNL/TM-12777), October 1994.

11. P. M. Rice and R. E. Stoller, Lockheed Martin Energy Systems, Oak Ridge Natl. Lab., Oak Ridge, Tenn., *Microstructural Characterization of Selected AEA/UCSB Model FeCuMn Alloys*, USNRC Report NUREG/CR-6332 (ORNL/TM-12980), June 1996.

12. J. H. Giovanola and J. E. Crocker, SRI International, *Fracture Toughness Testing with Cracked Round Bars: Feasibility Study*, USNRC Report NUREG/CR-6342 (ORNL/SUB/94-DHK60), April 2000.

13. F. M. Haggag and R. K. Nanstad, Lockheed Martin Energy Systems, Oak Ridge Natl. Lab., Oak Ridge, Tenn., *Effects of Thermal Aging and Neutron Irradiation on the Mechanical Properties of Three-Wire Stainless Steel Weld Overlay Cladding*, USNRC Report NUREG/CR-6363 (ORNL/TM-13047), May 1997.

14. M. A. Sokolov and D. J. Alexander, Lockheed Martin Energy Systems, Oak Ridge Natl. Lab., Oak Ridge, Tenn., *An Improved Correlation Procedure for Subsize and Full-Size Charpy Impact Specimen Data*, USNRC Report NUREG/CR-6379 (ORNL/TM-13088), March 1997.

15. S. K. Iskander and R. E. Stoller, Lockheed Martin Energy Research Corporation, Oak Ridge Natl. Lab., Oak Ridge, Tenn., *Results of Charpy V-Notch Impact Testing of Structural Steel Specimens Irradiated at ~30°C to 1 × 10^6 Neutrons/cm^2 in a Commercial Reactor Cavity*, USNRC Report NUREG/CR-6399 (ORNL-6886), April 1997.

16. S. K. Iskander, P. P. Milella, and A. Pini, Lockheed Martin Energy Research Corporation, Oak Ridge Natl. Lab., Oak Ridge, Tenn., *Results of Crack-Arrest Tests on Irradiated A 503 Class 3 Steel*, USNRC Report NUREG/CR-6447 (ORNL-6894), February 1998.

17. P. Pareige, K. F. Russell, R. E. Stoller, and M. K. Miller, Lockheed Martin Energy Research Corporation, Oak Ridge Natl. Lab., Oak Ridge, Tenn., *Influence of Long-Term Thermal Aging on the Microstructural Evolution of Nuclear Reactor Pressure Vessel Materials: An Atom Probe Study*, USNRC Report NUREG/CR-6537(ORNL-13406), March 1998.

18. I. Remec, C. A. Baldwin, and K. B. K. Kam, Lockheed Martin Energy Research Corporation, Oak Ridge Natl. Lab., Oak Ridge, Tenn., *Neutron Exposure Parameters for Capsule 10.05 in the Heavy-Section Steel Irradiation Program Tenth Irradiation Series*, USNRC Report NUREG/CR-6600 (ORNL/TM-13548), October 1998.

19. I. Remec, C. A. Baldwin, and F. B. K. Kam, Lockheed Martin Energy Research Corporation, Oak Ridge Natl. Lab., Oak Ridge, Tenn., *Neutron Exposure Parameters for the Dosimetry Capsule in the Heavy-Section Steel Irradiation Program Tenth Irradiation Series*, USNRC Report NUREG/CR-6601 (ORNL/TM-13549), October 1998.

20. D. E. McCabe, R. K. Nanstad, S. K. Iskander, D. W. Heatherly, and R. L. Swain, Lockheed Martin Energy Research Corporation, Oak Ridge Natl. Lab., Oak Ridge, Tenn., *Evaluation of WF-70 Weld Metal from the Midland Unit 1 Reactor Vessel—Final Report*, USNRC Report NUREG/CR-5736 (ORNL/TM-13748), November 2000.

21. Mikhail A. Sokolov and Randy K. Nanstad, Lockheed Martin Energy Research Corporation, Oak Ridge Natl. Lab., Oak Ridge, Tenn., *Comparison of Irradiation-Induced Shifts of K_{Jc} and Charpy Impact Toughness for Reactor Pressure Vessel Steels*, USNRC Report NUREG/CR-6609 (ORNL/TM-13755), November 2000.

22. S. K. Iskander, C. A. Baldwin, D. W. Heatherly, D. E. McCabe, I. Remec, and R. L. Swain, UT-Battelle, LLC, Oak Rdge Nat'l. Lab., Oak Ridge, Tenn., *Detailed Results of Testing Unirradiated and Irradiated Crack-Arrest Toughness Specimens from the Low-Upper-Shelf-Energy, High-Copper Weld, WF-70*, USNRC Report NUREG/CR-6621 (ORNL/TM-13764), to be published (submitted July 2004).

23. D. J. Alexander, K. B. Alexander, M. K. Miller, and R. K. Nanstad, Lockheed Martin Energy Research Corporation, Oak Ridge Natl. Lab., Oak Ridge, Tenn., *The Effect of Aging at 343°C on the Microstructure and Mechanical Properties of Type 308 Stainless Steel Welds*, USNRC Report NUREG/CR-6628 (ORNL/TM-13767), November 2000.

24. M. K. Miller, P. Pariege, K. F. Russell, and R. E. Stoller, Lockheed Martin Energy Research Corporation, Oak Ridge Natl. Lab., Oak Ridge, Tenn., *An Atom Probe Tomography Characterization of the Solute Distributions in a Neutron Irradiated and Annealed Pressure Vessel Steel*, USNRC Report NUREG/CR-6629 (ORNL/TM-13768), November 2000.

25. I. Remec, C. A. Baldwin, and E. D. Blakeman, Lockheed Martin Energy Research Corporation, Oak Ridge Natl. Lab., Oak Ridge, Tenn., *Characterization of the Neutron Field in the HSSI/UCSB Irradiation Facility at the Ford Nuclear Reactor*, USNRC Report NUREG/CR-6646 (ORNL/TM-1999/140), to be published (submitted September 1999).

26. P. M. Rice and R. E. Stoller, UT-Battelle, LLC, Oak Ridge Natl. Lab., Oak Ridge, Tenn., *Hardening Behavior of Ferritic Alloys at High Doses and After Thermal Aging*, USNRC Report NUREG/CR-6643 (ORNL/TM-1999/297), to be published (submitted August 2000).

27. S. K. Iskander, J. T. Hutton, L. E. Creech, M. Suzuki, K. Onizawa, E. T. Manneschmidt, R. K. Nanstad, T. M. Rosseel, and P. S. Bishop, UT-Battelle, LLC, Oak Ridge Natl. Lab., Oak Ridge, Tenn., *Attenuation of Charpy Impact Toughness Through the Thickness of a JPDR Pressure Vessel Weldment*, USNRC Report NUREG/CR-6709 (ORNL/TM-2000-343), to be published (submitted January 2001).

28. K. Onizawa, E. van Walle, W. Pavinich, and R. K. Nanstad, UT-Battelle, LLC, Oak Ridge Natl. Lab., Oak Ridge, Tenn., *Results and Analysis of The ASTM Round Robin On Reconstitution*, USNRC Report NUREG/CR-6777, (ORNL/TM-2001/34) August 2002.

29. D. W. Heatherly, K. R. Thoms, M. T. Hurst, and G. E. Giles, UT-Battelle, LLC, Oak Ridge Natl. Lab., Oak Ridge, Tenn., *Heavy-Section Steel Irradiation Program's Reusable Irradiation Facilities*, USNRC Report NUREG/CR-6779, (ORNL/TM-2002/77) to be published (submitted February 2002).

30. R. K. Nanstad and D. E. McCabe, UT-Battelle, LLC, Oak Ridge Natl. Lab., Oak Ridge, Tenn., *Preliminary Evaluation of Precracked Charpy Specimens for Determining Fracture Toughness of Reactor Pressure Vessel Weldment, New Coordinated Research Program*, USNRC Report NUREG/CR-XXXX (ORNL/TM-2001/YYY), to be published (submitted July 2001).

31. M. A. Sokolov, R. K. Nanstad, I. Remec, C. A. Baldwin, and R. L. Swain, UT-Battelle, LLC, Oak Ridge Natl. Lab., Oak Ridge, Tenn., *Fracture Toughness of an Irradiated, Highly Embrittled Reactor Pressure Vessel Weld*, USNRC Report NUREG/CR-XXXX (ORNL/TM-2002/293), to be published (submitted December 2003).

A.2 REPORTS RELATED TO IRRADIATION EFFECTS IN PRESSURE VESSEL MATERIALS AND TO THE PROPERTIES OF UNIRRADIATED MATERIALS USED IN THE HSSI AND HSST PROGRAMS

C. E. Childress, Union Carbide Corp. Nuclear Div., Oak Ridge Natl. Lab., Oak Ridge, Tenn., *Fabrication History of the First Two 12-in.-Thick A-533 Grade B, Class 1 Steel Plates of the Heavy-Section Steel Technology Program*, ORNL-4313, February 1969.

T. R. Mager and F. O. Thomas, Westinghouse Electric Corporation, PWR Systems Division, Pittsburgh, Pa., *Evaluation by Linear Elastic Fracture Mechanics of Radiation Damage to Pressure Vessel Steels*, WCAP-7328 (Rev.), October 1969.

P. N. Randall, TRW Systems Group, Redondo Beach, Calif., *Gross Strain Measure of Fracture Toughness of Steels*, HSSTP-TR-3, Nov. 1, 1969.

L. W. Loechel, Martin Marietta Corporation, Denver, Colo., *The Effect of Testing Variables on the Transition Temperature in Steel*, MCR-69-189, Nov. 20, 1969.

W. O. Shabbits, W. H. Pryle, and E. T. Wessel, Westinghouse Electric Corporation, PWR Systems Division, Pittsburgh, Pa., *Heavy-Section Fracture Toughness Properties of A533 Grade B Class 1 Steel Plate and Submerged Arc Weldment*, WCAP-7414, December 1969.

C. E. Childress, Union Carbide Corp. Nuclear Div., Oak Ridge Natl. Lab., Oak Ridge, Tenn., *Fabrication History of the Third and Fourth ASTM A-533 Steel Plates of the Heavy-Section Steel Technology Program*, ORNL-4313-2, February 1970.

P. B. Crosley and E. J. Ripling, Materials Research Laboratory, Inc., Glenwood, Ill., *Crack Arrest Fracture Toughness of A533 Grade B Class 1 Pressure Vessel Steel*, HSSTP-TR-8, March 1970.

F. J. Loss, Naval Research Laboratory, Washington, D.C., *Dynamic Tear Test Investigations of the Fracture Toughness of Thick-Section Steel*, NRL-7056, May 14, 1970.

T. R. Mager, Westinghouse Electric Corporation, PWR Systems Division, Pittsburgh, Pa., *Post-Irradiation Testing of 2T Compact Tension Specimens*, WCAP-7561, August 1970.

F. J. Witt and R. G. Berggren, Union Carbide Corp. Nuclear Div., Oak Ridge Natl. Lab., Oak Ridge, Tenn., *Size Effects and Energy Disposition in Impact Specimen Testing of ASTM A533 Grade B Steel*, ORNL/TM-3030, August 1970.

D. A. Canonico, Union Carbide Corp. Nuclear Div., Oak Ridge Natl. Lab., Oak Ridge, Tenn., *Transition Temperature Considerations for Thick-Wall Nuclear Pressure Vessels*, ORNL/TM-3114, October 1970.

T. R. Mager, Westinghouse Electric Corporation, PWR Systems Division, Pittsburgh, Pa., *Fracture Toughness Characterization Study of A533, Grade B, Class 1 Steel*, WCAP-7578, October 1970.

W. O. Shabbits, Westinghouse Electric Corporation, PWR Systems Division, Pittsburgh, Pa., *Dynamic Fracture Toughness Properties of Heavy-Section A533 Grade B Class 1 Steel Plate*, WCAP-7623, December 1970.

C. E. Childress, Union Carbide Corp. Nuclear Div., Oak Ridge Natl. Lab., Oak Ridge, Tenn., *Fabrication Procedures and Acceptance Data for ASTM A-533 Welds and a 10-in.-Thick ASTM A-543 Plate of the Heavy Section Steel Technology Program*, ORNL-TM-4313-3, January 1971.

D. A. Canonico and R. G. Berggren, Union Carbide Corp. Nuclear Div., Oak Ridge Natl. Lab., Oak Ridge, Tenn., *Tensile and Impact Properties of Thick-Section Plate and Weldments*, ORNL/TM-3211, January 1971.

C. W. Hunter and J. A. Williams, Hanford Eng. Dev. Lab., Richland, Wash., *Fracture and Tensile Behavior of Neutron-Irradiated A533-B Pressure Vessel Steel*, HEDL-TME-71-76, Feb. 6, 1971.

C. E. Childress, Union Carbide Corp. Nuclear Div., Oak Ridge Natl. Lab., Oak Ridge, Tenn., *Manual for ASTM A533 Grade B Class 1 Steel (HSST Plate 03) Provided to the International Atomic Energy Agency*, ORNL/TM-3193, March 1971.

P. N. Randall, TRW Systems Group, Redondo Beach, Calif., *Gross Strain Crack Tolerance of A533-B Steel*, HSSTP-TR-14, May 1, 1971.

C. L. Segaser, Union Carbide Corp. Nuclear Div., Oak Ridge Natl. Lab., Oak Ridge, Tenn., *Feasibility Study, Irradiation of Heavy-Section Steel Specimens in the South Test Facility of the Oak Ridge Research Reactor*, ORNL/TM-3234, May 1971.

H. T. Corten and R. H. Sailors, University of Illinois, Urbana, Ill., *Relationship Between Material Fracture Toughness Using Fracture Mechanics and Transition Temperature Tests*, T&AM Report 346, Aug. 1, 1971.

L. A. James and J. A. Williams, Hanford Eng. Dev. Lab., Richland, Wash., *Heavy Section Steel Technology Program Technical Report No. 21, The Effect of Temperature and Neutron Irradiation Upon the Fatigue-Crack Propagation Behavior of ASTM A533 Grade B, Class 1 Steel*, HEDL-TME 72-132, September 1972.

P. B. Crosley and E. J. Ripling, Materials Research Laboratory, Inc., Glenwood, Ill., *Crack Arrest in an Increasing K-Field*, HSSTP-TR-27, January 1973.

W. J. Stelzman and R. G. Berggren, Union Carbide Corp. Nuclear Div., Oak Ridge Natl. Lab., Oak Ridge, Tenn., *Radiation Strengthening and Embrittlement in Heavy-Section Steel Plates and Welds*, ORNL-4871, June 1973.

J. M. Steichen and J. A. Williams, Hanford Eng. Dev. Lab., Richland, Wash., *High Strain Rate Tensile Properties of Irradiated ASTM A533 Grade B Class 1 Pressure Vessel Steel*, HEDL-TME 73-74, July 1973.

J. A. Williams, Hanford Eng. Dev. Lab., Richland, Wash., *The Irradiation and Temperature Dependence of Tensile and Fracture Properties of ASTM A533, Grade B, Class 1 Steel Plate and Weldment*, HEDL-TME 73-75, August 1973.

J. A. Williams, Hanford Eng. Dev. Lab., Richland, Wash., *Some Comments Related to the Effect of Rate on the Fracture Toughness of Irradiated ASTM A553-B Steel Based on Yield Strength Behavior*, HEDL-SA 797, December 1974.

J. A. Williams, Hanford Eng. Dev. Lab., Richland, Wash., *The Irradiated Fracture Toughness of ASTM A533, Grade B, Class 1 Steel Measured with a Four-Inch-Thick Compact Tension Specimen*, HEDL-TME 75-10, January 1975.

J. G. Merkle, G. D. Whitman, and R. H. Bryan, Union Carbide Corp. Nuclear Div., Oak Ridge Natl. Lab., Oak Ridge, Tenn., *An Evaluation of the HSST Program Intermediate Pressure Vessel Tests in Terms of Light-Water-Reactor Pressure Vessel Safety*, ORNL/TM-5090, November 1975.

J. A. Davidson, L. J. Ceschini, R. P. Shogan, and G. V. Rao, Westinghouse Electric Corporation, Pittsburgh, Pa., *The Irradiated Dynamic Fracture Toughness of ASTM A533, Grade B, Class 1 Steel Plate and Submerged Arc Weldment*, WCAP-8775, October 1976.

J. A. Williams, Hanford Eng. Dev. Lab., Richland, Wash., *Tensile Properties of Irradiated and Unirradiated Welds of A533 Steel Plate and A508 Forgings*, NUREG/CR-1158 (ORNL/SUB-79/50917/2), July 1979.

J. A. Williams, Hanford Eng. Dev. Lab., Richland, Wash., *The Ductile Fracture Toughness of Heavy-Section Steel Plate*, NUREG/CR-0859, September 1979.

K. W. Carlson and J. A. Williams, Hanford Eng. Dev. Lab., Richland, Wash., *The Effect of Crack Length and Side Grooves on the Ductile Fracture Toughness Properties of ASTM A533 Steel*, NUREG/CR-1171 (ORNL/SUB-79/50917/3), October 1979.

G. A. Clarke, Westinghouse Electric Corp., Pittsburgh, Pa., *An Evaluation of the Unloading Compliance Procedure for J-Integral Testing in the Hot Cell, Final Report*, NUREG/CR-1070 (ORNL/SUB-7394/1), October 1979.

P. B. Crosley and E. J. Ripling, Materials Research Laboratory, Inc., Glenwood, Ill., *Development of a Standard Test for Measuring K_{Ia} with a Modified Compact Specimen*, NUREG/CR-2294 (ORNL/SUB-81/7755/1), August 1981.

H. A. Domian, Babcock and Wilcox Company, Alliance, Ohio, *Vessel V-8 Repair and Preparation of Low Upper-Shelf Weldment*, NUREG/CR-2676 (ORNL/SUB/81-85813/1), June 1982.

R. D. Cheverton, S. K. Iskander, and D. G. Ball, Union Carbide Corp. Nuclear Div., Oak Ridge Natl. Lab., Oak Ridge, Tenn., *PWR Pressure Vessel Integrity During Overcooling Accidents: A Parametric Analysis*, NUREG/CR-2895 (ORNL/TM-7931), February 1983.

J. G. Merkle, Union Carbide Corp. Nuclear Div., Oak Ridge Natl. Lab., Oak Ridge, Tenn., *An Examination of the Size Effects and Data Scatter Observed in Small Specimen Cleavage Fracture Toughness Testing*, NUREG/CR-3672 (ORNL/TM-9088), April 1984.

W. R. Corwin, Martin Marietta Energy Systems, Inc., Oak Ridge Natl. Lab., Oak Ridge, Tenn., *Assessment of Radiation Effects Relating to Reactor Pressure Vessel Cladding*, NUREG/CR-3671 (ORNL-6047), July 1984.

W. R. Corwin, R. G. Berggren, and R. K. Nanstad, Martin Marietta Energy Systems, Inc., Oak Ridge Natl. Lab., Oak Ridge, Tenn., *Charpy Toughness and Tensile Properties of a Neutron Irradiated Stainless Steel Submerged-Arc Weld Cladding Overlay*, NUREG/CR-3927 (ORNL/TM-9709), September 1984.

J. J. McGowan, Martin Marietta Energy Systems, Inc., Oak Ridge Natl. Lab., Oak Ridge, Tenn., *Tensile Properties of Irradiated Nuclear Grade Pressure Vessel Plate and Welds for the Fourth HSST Irradiation Series*, NUREG/CR-3978 (ORNL/TM-9516), January 1985.

J. J. McGowan, Martin Marietta Energy Systems, Inc., Oak Ridge Natl. Lab., Oak Ridge, Tenn., *Tensile Properties of Irradiated Nuclear Grade Pressure Vessel Welds for the Third HSST Irradiation Series*, NUREG/CR-4086 (ORNL/TM-9477), March 1985.

W. R. Corwin, G. C. Robinson, R. K. Nanstad, J. G. Merkle, R. G. Berggren, G. M. Goodwin, R. L. Swain, and T. D. Owings, Martin Marietta Energy Systems, Inc., Oak Ridge Natl. Lab., Oak Ridge, Tenn., *Effects of Stainless Steel Weld Overlay Cladding on the Structural Integrity of Flawed Steel Plates in Bending, Series 1*, NUREG/CR-4015 (ORNL/TM-9390), April 1985.

W. J. Stelzman, R. G. Berggren, and T. N. Jones, Martin Marietta Energy Systems, Inc., Oak Ridge Natl. Lab., Oak Ridge, Tenn., *ORNL Characterization of Heavy-Section Steel Technology Program Plates 01, 02, and 03*, NUREG/CR-4092 (ORNL/TM-9491), April 1985.

G. D. Whitman, Martin Marietta Energy Systems, Inc., Oak Ridge Natl. Lab., Oak Ridge, Tenn., *Historical Summary of the Heavy-Section Steel Technology Program and Some Related Activities in Light-Water Reactor Pressure Vessel Safety Research*, NUREG/CR-4489 (ORNL-6259), March 1986.

R. H. Bryan, B. R. Bass, S. E. Bolt, J. W. Bryson, J. G. Merkle, R. K. Nanstad, and G. C. Robinson, Martin Marietta Energy Systems, Inc., Oak Ridge Natl. Lab., Oak Ridge, Tenn., *Test of 6-in.-Thick Pressure Vessels. Series 3: Intermediate Test Vessel V-8A - Tearing Behavior of Low Upper-Shelf Material*, NUREG-CR-4760 (ORNL-6187), May 1987.

D. B. Barker, R. Chona, W. L. Fourney, and G. R. Irwin, University of Maryland, College Park, Md., *A Report on the Round Robin Program Conducted to Evaluate the Proposed ASTM Standard Test Method for Determining the Plane Strain Crack Arrest Fracture Toughness, K_{Ia}, of Ferritic Materials*, NUREG/CR-4966 (ORNL/SUB/79-7778/4), January 1988.

L. F. Miller, C. A. Baldwin, F. W. Stallman, and F. B. K. Kam, Martin Marietta Energy Systems, Inc., Oak Ridge Natl. Lab., Oak Ridge, Tenn., *Neutron Exposure Parameters for the Metallurgical Test Specimens in the Fifth Heavy-Section Steel Technology Irradiation Series Capsules*, NUREG/CR-5019 (ORNL/TM-10582), March 1988.

J. J. McGowan, R. K. Nanstad, and K. R. Thoms, Martin Marietta Energy Systems, Inc., Oak Ridge Natl. Lab., Oak Ridge, Tenn., *Characterization of Irradiated Current-Practice Welds and A533 Grade B Class 1 Plate for Nuclear Pressure Vessel Service*, NUREG/CR-4880 (ORNL-6484/V1 and V2), July 1988.

R. D. Cheverton, W. E. Pennell, G. C. Robinson, and R. K. Nanstad, Martin Marietta Energy Systems, Inc., Oak Ridge Natl. Lab., Oak Ridge, Tenn., *Impact of Radiation Embrittlement on Integrity of Pressure Vessel Supports for Two PWR Plants*, NUREG/CR-5320 (ORNL/TM-10966), February 1989.

J. G. Merkle, Martin Marietta Energy Systems, Inc., Oak Ridge Natl. Lab., Oak Ridge, Tenn., *An Overview of the Low-Upper-Shelf Toughness Safety Margin Issue*, NUREG/CR-5552 (ORNL/TM-11314), August 1990.

R. D. Cheverton, T. L. Dickson, J. G. Merkle, and R. K. Nanstad, Martin Marietta Energy Systems, Inc., Oak Ridge Natl. Lab., Oak Ridge, Tenn., *Review of Reactor Pressure Vessel Evaluation Report for Yankee Rowe Nuclear Power Station (YAEC No. 1735)*, NUREG/CR-5799 (ORNL/TM-11982), March 1992.

INTERNAL DISTRIBUTION

1. C. A. Baldwin
2. B. R. Bass
3. E. E. Bloom
4. M. V. Buchanan
5. W. R. Corwin
6. D. K. Felde
7. S. R. Greene
8. G. E. Giles
9–14. D. W. Heatherly
15. D. J. Hill
16. R. W. Hobbs
17. L. L. Horton
18. M. T. Hurst
19. S. K. Iskander
20. M. K. Miller
21. D. E. McCabe
22. J. G. Merkle
23. R. K. Nanstad
24. A. L. Qualls
25. D. G. Raby
26. I. Remec
27–34. T. M. Rosseel
35. J. E. Rushton
36. J. J. Simpson
37. R. G. Sitterson
38. D. W. Sparks
39. R. E. Stoller
40–44. K. R. Thoms
45. R. L. Wallace
46. J. A. Wang
47. G. L. Yoder
48. S. J. Zinkle
49. Office of Technical Information and Classification

EXTERNAL DISTRIBUTION

50–51. AEA Technology, Harwell, Thermal Reactor Services, Dideot, Oxfordshire, OXII, ORA, United Kingdom

C. A. English
S. R. Ortner

52. ATI, Suite 160, 3860 Blackhawk Road, Danville, CA 94506

W. L. Server

53. Babcock & Wilcox, Lynchburg Technology Center, P.O. Box 11165, Lynchburg, VA 24506-1165

K. Y. Hour

54. Battelle Pacific Northwest National Laboratory, P.O. Box 999, Richland, WA 99352

F. A. Garner

55. Bettis Atomic Power Laboratory, Westinghouse Electric Corp., P.O. Box 79, West Mifflin, PA 15122

M. G. Burke

56–57. SCK-CEN, Reactor Materials Research Department, Boeretang 200, B-2400 Mol. Belgium

E. Lucon
E. Van Walle

58. 2226 Cherokee Blvd., Knoxville, TN 37919-8343

I. I. Siman-Tov

59–60. Electric Power Research Institute, 1300 Harris Boulevard, Charlotte, NC 28262

R. G. Carter
Jack Spanner

61. Invex Engineering, 1113 Laurel Hill Road, Knoxville, TN 37923

W. A. Pavinich

62. Nuclear Research Institute, Division of Nuclear Materials, 250 68 REZ, Czech Republic

M. Brumovsky

63. Paul Scherrer Institute, CH-5233 Villigen SPI, Switzerland

D. Kalkhof

64. Rolls-Royce and Associates Ltd., P.O. Box 31, Raynesway, Derby DE24 8BJ, United Kingdom

T. J. Williams

65. Staatliche Materialprufungsanstalt and der Universitat Stuttgart, Pfaffenwaldring 32, 7 Stuttgart 80, Germany

J. Fohl

66. U.S. Department of Energy, Oak Ridge Operations Office, P.O. Box 2008, Oak Ridge, TN 37831-6269

S. R. Martin, Jr.

67. U.S. Department of Energy, Office of Nuclear Science and Technology, 19901 Germantown Road, Germantown, MD 20874-1290

R. Versluis

68–76. U.S. Nuclear Regulatory Commission, Office of Nuclear Regulatory Research, MS T10-E10, Washington, DC 20555

R. J. Barrett
R. P. Croteau
C. J. Fairbanks
A. L. Hiser
M. T. Kirk
S. M. Malik
C. E. Moyer
R. L. Tregoning
J. L Uhle

77–78. University of California, Department of Chemical Engineering, Ward Memorial Drive, Santa Barbara, CA 93106

G. E. Lucas
G. R. Odette

79–82. University of Michigan, Ford Nuclear Reactor, 2301 Bonisteel Blvd., Ann Arbor, MI 48109-2100

C. W. Becker
P. A. Simpson
E. Touchberry
D. K. Wehe

83. University of Missouri-Rolla, Department of Nuclea Engineering, Rolla, MO 65401

A. S. Kumar

84. Westinghouse, P.O. Box 500, Mail Code 9483-1903, Windsor, CT 60695

S. T. Byrne