ORNL/TM-2013/538

Analysis of HFIR 2008 Dosimetry Experiments and Surveillance Capsules Withdrawn in 2009 and Reevaluation of All Previously Removed Capsules

Igor Remec

February 2014

OAK RIDGE NATIONAL LABORATORY
MANAGED BY UT-BATTELLE FOR THE US DEPARTMENT OF ENERGY

DOCUMENT AVAILABILITY

Reports produced after January 1, 1996, are generally available free via US Department of Energy (DOE) SciTech Connect.

Website http://www.osti.gov/scitech/

Reports produced before January 1, 1996, may be purchased by members of the public from the following source:

National Technical Information Service
5285 Port Royal Road
Springfield, VA 22161
Telephone 703-605-6000 (1-800-553-6847)
TDD 703-487-4639
Fax 703-605-6900
E-mail info@ntis.gov
Website http://www.ntis.gov/support/ordernowabout.htm

Reports are available to DOE employees, DOE contractors, Energy Technology Data Exchange representatives, and International Nuclear Information System representatives from the following source:

Office of Scientific and Technical Information
PO Box 62
Oak Ridge, TN 37831
Telephone 865-576-8401
Fax 865-576-5728
E-mail reports@osti.gov
Website http://www.osti.gov/contact.html

This report was prepared as an account of work sponsored by an agency of the United States Government. Neither the United States Government nor any agency thereof, nor any of their employees, makes any warranty, express or implied, or assumes any legal liability or responsibility for the accuracy, completeness, or usefulness of any information, apparatus, product, or process disclosed, or represents that its use would not infringe privately owned rights. Reference herein to any specific commercial product, process, or service by trade name, trademark, manufacturer, or otherwise, does not necessarily constitute or imply its endorsement, recommendation, or favoring by the United States Government or any agency thereof. The views and opinions of authors expressed herein do not necessarily state or reflect those of the United States Government or any agency thereof.

ORNL/TM-2013/538

Reactor and Nuclear Systems Division

ANALYSIS OF HFIR 2008 DOSIMETRY EXPERIMENTS AND SURVEILLANCE CAPSULES WITHDRAWN IN 2009 AND REEVALUATION OF ALL PREVIOUSLY REMOVED CAPSULES

I. Remec

Date Published: August 2015

Prepared by
OAK RIDGE NATIONAL LABORATORY
Oak Ridge, Tennessee 37831-6283
managed by
UT-BATTELLE, LLC
for the
U.S. DEPARTMENT OF ENERGY
under contract DE-AC05-00OR22725

CONTENTS

Page

CONTENTS iii
LIST OF FIGURES v
LIST OF TABLES vii
NOMENCLATURE, ACRONYMS, AND SYMBOLS xi
ACKNOWLEDGMENTS xiii
EXECUTIVE SUMMARY xv
ABSTRACT xix
1. INTRODUCTION 1
2. DOSIMETRY-DEDICATED CAPSULES REMOVED IN 2008 5
3. SURVEILLANCE CAPSULES REMOVED IN 2009 11
4. THE ANALYSIS 19
5. RESULTS AND DISCUSSION 33
6. CONCLUSIONS 39
7. REFERENCE 41
APPENDIX A MEASURED SPECIFIC ACTIVITIES AND HELIUM CONCENTRATIONS FOR THE CAPSULES REMOVED IN 2008 AND 2009 ..... A-1
APPENDIX B CALCULATED NEUTRON AND GAMMA FLUXES AND NEUTRON AND GAMMA-RAY DPA CROSS SECTIONS B-1
APPENDIX C COMPARISON OF MEASURED AND CALCULATED REACTION RATES FOR DOSIMETERS FROM DOSIMETRY-DEDICATED CAPSULES REMOVED IN 2008 AND WEDGE WIRES FROM SURVEILLANCE CAPSULES REMOVED IN 2009 ..... C-1
APPENDIX D REANALYSIS OF DOSIMETRY DEDICATED CAPSULES REMOVED BEFORE 2008 ..... D-1
APPENDIX E SOURCE OF THE DPA(N) AND DPA(Γ) VALUES CORRESPONDING TO THE HFIR VESSEL SURVEILLANCE DATA E-1
E.1 INTRODUCTION E-3
E.2 METHOD OF ESTIMATING VALUES OF dpa FOR SPECIFIC "MEASURED" VALUES OF ΔNDTT E-10
E.3 HB-2 NOZZLE MATERIAL (A350LF3, $NDTT_0$ = - 110°F) E-15
E.3.1 1969 (Δt = 2.34 EFPY) E-15
E.3.2 1974 (Δt = 6.45 EFPY) E-15
E.3.3 1983 (Δt = 15.01 EFPY) E-16
E.3.4 1986 (Δt = 17.53 EFPY) E-16
E.3.5 2005 (Δt = 22.70 + 0.11 +1.26 = 24.06 EFFPY) E-16
E.3.6 2009 (Δt = 2.31 EFPY) E-18
E.4 HB-3 NOZZLE MATERIAL A350LF3 ($NDTT_0$ = -80°F) E-18
E.4.1 1969 (Δt = 2.34 EFPY) E-19
E.4.2 1974 (Δt = 6.45 EFPY) E-19
E.4.3 1983 (Δt = 15.01 EFPY) E-20
E.4.4 1986 (Δt = 17.53 EFPY) E-21
E.4.5 2009 (Δt = 25.0 EFPY) E-22
E.4.6 2009 (Δt = 2.31 EFPY) E-23
E.5 HB-1, 4 NOZZLE MATERIAL (A105II, $NDTT_0$ = -80°F) E-23
E.5.1 1969 (Δt = 2.34 EFPY) E-23
E.5.2 1974 (Δt = 6.45 EFPY) E-24

E.5.3 1983 (Δt = 15.01 EFPY) E-25
E.5.4 1986 (Δt = 17.53 EFPY) E-26
E.6 VESSEL SHELL MATERIAL (A212B(LT), $NDTT_0$= -5°F) E-27
E.6.1 1983 (Δt = 15.01 EFPY) E-27
E.6.2 1986 (Δt = 17.53 EFPY) E-28
E.6.3 1993 (Δt = 17.53 + 1.69 = 19.22 EFPY) E-29
E.6.4 2009 (Δt = 17.53 + 5.16 + 2.31 (2.25) = 25.0 (24.9) EFPY) E-31
E.7 (VESSEL SHELL MATERIAL (A212B(LS), $NDTT_0$= -5°F) E-32
E.7.1 2009 (Δt = 5.16 + 2.31 = 7.47 EFPY) E-32
E.8 NOZZLE WELD MATERIAL ($NDTT_0$ = 0°F) E-33
E.8.1 1993 (Δt = 1.69 EFPY) E-33
E.8.2 2009 (Δt = 5.16 + 2.31 = 7.47 EFPY) E-34
E.9 SEAM WELD ($NDTT_0$ = -5°F) E-34
E.9.1 1993 (Δt = 1.69 EFPY) E-35
E.9.2 2009 (Δt = 5.16 + 2.41 = 7.57 EFPY) E-36
APPENDIX F REANALYSIS OF SURVEILLANCE CAPSULES HB-2-8, HB-2-17 AND HB-2-18 ..... F-1
APPENDIX G COMPUTER CODES AND DATA ARCHIVE G-1

LIST OF FIGURES

Figure **Page**

Fig. 1. Cross section of HFIR core and PV at core horizontal midplane. 1
Fig. 2. Capsules for HFIR dosimeter experiments. 6
Fig. 3. Schematic view of the HFIR surveillance keys with numbered positions of surveillance-specimen capsules. 8
Fig. 4. Horizontal section of the HB-4 beam tube. 9
Fig. 5. Schematic drawing of the section perpendicular to the HB-4 axis. 10
Fig. 6. Locations of the surveillance capsules removed from Key 2W and Key 2C. 15
Fig. 7. Locations of the surveillance capsules with full-size CVN removed from Key 6. 16
Fig. 8. Schematic drawing of a surveillance capsule containing full-size CVN specimens. 17
Fig. 9. Schematic drawing of a surveillance capsule containing half-size CVN specimens. 17
Fig. A.1. Material specification sheet for wedge wire material SST 304 Heat 59937. ..... A-11
Fig. A.2. Material specification sheet for wedge wire material SST 304L Heat 63366. ..... A-12
Fig. A.3. Material specification sheet for dosimeter grade iron wire. A-13
Fig. A.4. Material specification sheet for dosimeter grade nickel wire. A-14
Fig. A.5. Material specifications for Al/Co wire, Page 1 ..... A-15
Fig. A.6. Material specifications for Al/Co wire, Page 2 ..... A-16

LIST OF TABLES

Table **Page**

Table ES.1. Adjusted and calculated dpa rates (at 100 MW) for all HFIR vessel dosimetry-dedicated capsules removed through 2008 xvi
Table ES.2. Summary of "measured" dpa values for HFIR vessel materials through year 2009 xvii
Table 1. DOS capsules. 7
Table 2. Tubular-type dosimeter capsules 7
Table 3. Surveillance capsules with full-size CVN specimens removed from Key 2C in 2009 11
Table 4. Surveillance capsules with half-size CVN specimens removed from Key 2C in 2009 12
Table 5. Surveillance capsules with full-size CVN specimens removed from Key 2W in 2009 13
Table 6. Surveillance capsules with full size CVN specimens removed from Key 6 in 2009 14
Table 7. Summary of the adjusted irradiation parameters obtained by reanalysis of the dosimetry-dedicated capsules removed from HFIR before 2008 21
Table 8. Neutron, gamma, and total (n+ g) dpa rates for the surveillance capsules containing full size Charpy specimens removed from Key 2C in 2009 23
Table 9. Neutron, gamma, and total (n+g) dpa rates for the surveillance capsules containing full size Charpy specimens removed from Key 2W in 2009 24
Table 10. Neutron, gamma, and total (n+g) dpa rates for the surveillance capsules containing full size Charpy specimens removed from Key 6 in 2009 25
Table 11. Adjusted irradiation parameters for the surveillance capsules containing half-size Charpy specimens removed from Key 2C in 2009 25
Table 12. Calculated and adjusted irradiation parameters for the dosimetry-dedicated capsule DOS 10, irradiated at the Key 4, position 3[a] 26
Table 13. Calculated and adjusted irradiation parameters for the dosimetry-dedicated capsule DOS 11, irradiated at Key 4, position 8[a] 26
Table 14. Calculated and adjusted irradiation parameters for the dosimetry-dedicated capsule DOS 12, irradiated at the Key 4, position 10[a] 27
Table 15. Calculated and adjusted irradiation parameters for the dosimetry-dedicated capsule DOS 7, irradiated at the Key 2C, position 9[a] 27
Table 16. Calculated and adjusted irradiation parameters for the dosimetry-dedicated capsule DOS 13, irradiated at the Key 2C, position 13[a] 28
Table 17. Calculated and adjusted irradiation parameters for the dosimetry-dedicated tubular capsules HRB4-1G and HRB4-1A, irradiated at the Key 4, position D1[a] 28
Table 18. Calculated and adjusted irradiation parameters for the dosimetry-dedicated tubular capsules HRB4-2G and HRB4-2A, irradiated at the Key 4, position D2[a] 29
Table 19. Calculated and adjusted irradiation parameters for the dosimetry-dedicated tubular capsules HRB4-3G and HRB4-3A, irradiated at the Key 4, position D3[a] 29
Table 20. Dosimeters from the dosimetry-dedicated capsules that were not used in the adjustment calculations 30
Table 21. Dosimetry-dedicated capsules used to determine the irradiation parameters of the surveillance capsules via scaling 30
Table 22. Calculated and adjusted irradiation parameters for the surveillance capsule SW-6-4, irradiated in Key 6, position 6[a] 31
Table 23. Uncertainties of the measured reaction rates (as used in the adjustment calculations) 31

Table 24. Summary of the adjusted irradiation parameters for the dosimetry-dedicated capsules removed from HFIR in 2008 34
Table 25. Calculated and adjusted irradiation parameters for the surveillance capsule SW-6-5, irradiated in Key 6, position 5[a] 37
Table 26. Calculated and adjusted irradiation parameters for the surveillance capsule SW-6-6, irradiated in Key 6, position 8[a] 37
Table A.1. Measured specific activities of the dosimeters irradiated during HFIR fuel cycles 415A, 415B, and 416 ..... A-3
Table A.2. Measured helium concentrations in HFIR beryllium specimens irradiated during cycles 415A, 415B, and 416 ..... A-7
Table A.3. Measured specific activities of the dosimeters irradiated during HFIR fuel cycles 417 and 418 ..... A-8
Table A.4. Reactor power vs time for cycles 415A, 415B, and 416 (1.00 indicates 85 MW) A-9
Table A.5. Reactor power vs time for cycles 417 and 418 (100% indicates 85 MW) A-10
Table A.6. Measured specific activities of the wedge wires from surveillance capsules removed from Key 2C: HB-2C-1, HB-2C-2, HB-2C-3, HB-2C-10, HB-2C-11, HB-3-41, and HB-3-46 ..... A-17
Table A.7. Measured specific activities of the wedge wires from surveillance capsules removed from Key 2W A-20
Table A.8. Measured specific activities of the wedge wires from surveillance capsules removed from Key 6 ..... A-23
Table B.1. Energy boundaries for 61 neutron groups used in transport calculations (eV) B-3
Table B.2. Energy boundaries for 23 gamma-ray groups used in transport calculations (eV) B-3
Table B.3.[a] Calculated neutron and gamma fluxes normalized to a reactor power of 85 MW at the Key 4, position 3 location (DOS-10); units are $cm^{-2}s^{-1}$ B-4
Table B.4. Calculated neutron and gamma fluxes normalized to a reactor power of 85 MW at the Key 4, position 8 location (DOS-11); units are $cm^{-2}s^{-1}$ B-4
Table B.5. Calculated neutron and gamma fluxes normalized to a reactor power of 85 MW at the Key 4, position 10 location (DOS-12); units are $cm^{-2}s^{-1}$ B-4
Table B.6.[a] Calculated neutron and gamma fluxes normalized to a reactor power of 85 MW at Key 2C. These fluxes were used to analyze dosimetry-dedicated capsules DOS-7 (position 9), DOS-13 (position 13), DOS-8 (position 1), DOS-9 (position 4), and all surveillance capsules irradiated in Key 2C (HB-2C-1, -2, -3; HB-3-41, -46 and HB-2C-10, -11); units are $cm^{-2}s^{-1}$ B-5
Table B.7. Calculated neutron and gamma fluxes normalized to a reactor power of 85 MW at Key 2W, position 8 (DOS-1) and position 3 (DOS-2)[a] locations; units are $cm^{-2}s^{-1}$ B-6
Table B.8.[a] Calculated neutron and gamma fluxes normalized to a reactor power of 85 MW at Key 4, position D1 (HRB4-1G, -1A) location; units are $cm^{-2}s^{-1}$ B-7
Table B.9. Calculated neutron and gamma fluxes normalized to a reactor power of 85 MW at Key 4, position D2 (HRB4-2G, -2A) location; units are $cm^{-2}s^{-1}$ B-7
Table B.10. Calculated neutron and gamma fluxes normalized to a reactor power of 85 MW at Key 4, position D3 (HRB4-3G, -3A) location; units are $cm^{-2}s^{-1}$ B-7
Table B.11. Calculated neutron and gamma fluxes normalized to a reactor power of 85 MW; used for analysis of the surveillance capsules irradiated in Key 2W (HB-1A-62, -65, -70; LS-1-1, -2, -3, and NW 2-2, -2-3); units are $cm^{-2}s^{-1}$ B-8
Table B.12. Calculated neutron and gamma fluxes normalized to a reactor power of 85 MW; used for analysis of the surveillance capsule SW-6-4 irradiated in Key 6, position 6; units are cm-2s-1 ..... B-9
Table B.13. Calculated neutron and gamma fluxes normalized to a reactor power of 85 MW; used for analysis of the surveillance capsule SW-6-5 irradiated in Key 6, position 5; units are cm-2s-1 ..... B-9

Table B.14. Calculated neutron and gamma fluxes normalized to a reactor power of 85 MW; used for analysis of the surveillance capsule SW-6-6 irradiated in Key 6, position 8; units are cm-2s-1 ..... B-9
Table B.15.[a] Calculated neutron and gamma fluxes normalized to a reactor power of 85 MW; used for analysis of the dosimetry capsules HRB2-1G,-1A irradiated in Key 2D, position 1C; and capsule HRB2-2G,-2A irradiated in Key 2D, position 2C; units are $cm^{-2}s^{-1}$ B-10
Table B.16.[a] Calculated neutron and gamma fluxes normalized to a reactor power of 85 MW; used for analysis of the dosimetry capsules HRB2-1G,-1A irradiated in Key 2D, position 1W; capsule HRB2-2G,-2A irradiated in Key 2D, position 2W; and capsule HRB2-3G,-3A, irradiated in Key 2D, position 3W; units are $cm^{-2}s^{-1}$ B-10
Table B.17.[a] Calculated neutron and gamma fluxes normalized to a reactor power of 85 MW; used for analysis of the dosimetry capsule DOS-3, irradiated in Key 3, position 3; units are $cm^{-2}s^{-1}$ B-11
Table B.18.[a] Calculated neutron and gamma fluxes normalized to a reactor power of 85 MW; used for analysis of the dosimetry capsule DOS-4, irradiated in Key 3, position 8; units are cm-2s-1 ..... B-11
Table B.19.[a] Calculated neutron and gamma fluxes normalized to a reactor power of 85 MW; used for analysis of the dosimetry capsule DOS-5, irradiated in Key 3, position 10; units are $cm^{-2}s^{-1}$ B-12
Table B.20.[a] Calculated neutron and gamma fluxes normalized to a reactor power of 85 MW; used for analysis of the dosimetry capsule DOS-6, irradiated in Key 7, position 1; units are $cm^{-2}s^{-1}$ B-12
Table B.21.[a] Calculated neutron and gamma fluxes normalized to a reactor power of 85 MW; used for analysis of the dosimetry capsules DOS1-75, DOS2-75, DOS3-75, DOS4-G-75, DOS4-75, irradiated in Key 7, position 5; units are $cm^{-2}s^{-1}$ B-13
Table B.22.[a] Calculated neutron and gamma fluxes normalized to a reactor power of 85 MW; used for analysis of the dosimetry capsules DOS2-42 and DOS3-42, irradiated in Key 4, position 2; units are $cm^{-2}s^{-1}$ B-13
Table B.23.[a] Calculated neutron and gamma fluxes normalized to a reactor power of 85 MW; used for analysis of the dosimetry capsules DOS2-410 and DOS3-410, irradiated in Key 4, position 10; units are $cm^{-2}s^{-1}$ B-14
Table B.24.[a] Calculated neutron and gamma fluxes normalized to a reactor power of 85 MW; used for analysis of the dosimetry capsules DOS2-29 and DOS3-29, irradiated in Key 2, position 9; units are $cm^{-2}s^{-1}$ B-14
Table B.25. Cross sections for neutron induced dpa (ASTM); units are cm^{-2} B-15
Table B.26. Cross sections for gamma-ray induced dpa; units are cm^{-2} B-15
Table C.1. Comparison of measured and calculated reaction rates for DOS and tubular-dosimeter capsules..... C-3
Table C.2. Comparison of calculated-to-measured reaction rate ratios for the dosimetry-dedicated capsules. C-10
Table C.3. Comparison of measured and calculated reaction rates for the surveillance capsules removed from Key 2C C-11
Table C.4. Comparison of measured and calculated reaction rates for the surveillance capsules removed from Key 2W C-13
Table C.5. Comparison of measured and calculated reaction rates for the surveillance capsules removed from Key 6 ..... C-15
Table D.1. Calculated and adjusted irradiation parameters for the dosimetry-dedicated capsule DOS1 irradiated at Key 2W, position 8..... D-4
Table D.2. Calculated and adjusted irradiation parameters for the dosimetry-dedicated capsule DOS2 irradiated at Key 2W, position 32..... D-5

Table D.3. Calculated and adjusted irradiation parameters at K3, P3 (capsule DOS-3). D-6
Table D.4. Calculated and adjusted irradiation parameters at K3, P8 (capsule DOS-4). D-7
Table D.5. Calculated and adjusted irradiation parameters at K3, P10 (capsule DOS-5). D-8
Table D.6. Calculated and adjusted irradiation parameters at K7, P1 (capsule DOS-6). D-9
Table D.7. Calculated and adjusted irradiation parameters for the dosimetry-dedicated capsule DOS8 irradiated at the Key 2C, position 1. ..... D-10
Table D.8. Calculated and adjusted irradiation parameters for the dosimetry-dedicated capsule DOS9 irradiated at Key 2C, Position 4 ..... D-11
Table D.9. Calculated and adjusted irradiation parameters at 2D1C (capsules HRB2-1G and HRB2-1A, position 2; dosimeter sets GD-14 and Al-27; HRB2-1C). D-12
Table D.10. Calculated and adjusted irradiation parameters at 2D2C (capsules HRB2-2G and HRB2-2A, position 2; dosimeter sets GD-16 and Al-29; HRB2-2C). D-13
Table D.11. Calculated and adjusted irradiation parameters at 2D1W (capsules HRB2-1G and HRB2-1A, position 4; dosimeter sets GD-15 and Al-28; HRB1-W). D-14
Table D.12. Calculated and adjusted irradiation parameters at 2D2W (capsules HRB2-2G and HRB2-2A, position 4; dosimeter sets GD-17 and Al-30; HRB2-2W). D-15
Table D.13. Calculated and adjusted irradiation parameters at 2D3W (capsules HRB2-3G and HRB2-3A, position 2; dosimeter sets GD-18 and Al-31; HRB2-3W). D-16
Table D.14. Calculated and adjusted irradiation parameters at Key7 position 5 (capsules DOS1-75, DOS2-75, DOS3-75, DOS4-G-75, and DOS4-75). D-17
Table D.15. Calculated and adjusted irradiation parameters at Key2 position 9 (capsules DOS2-29 and DOS3-29). D-19
Table D.16. Calculated and adjusted irradiation parameters at Key4 position 2 (capsules DOS2-42 and DOS3-42). D-21
Table D.17. Calculated and adjusted irradiation parameters at Key4 position 10 (capsules DOS2-410 and DOS3-410). D-23
Table E.1. Adjusted and calculated dpa rates (at 100 MW) and M/C values for all HFIR vessel dosimetry-dedicated capsules removed through 2008 ..... E-5
Table E.2. Summary of "measured" values of dpa for HFIR vessel materials through year 2009 ..... E-6
Table E.3. Summary of HFIR A350LF3 nozzle-material surveillance-program dpa (n+γ) values E-7
Table E.4. Summary of HFIR A105II nozzle-material surveillance-program dpa (n+γ) values E-8
Table E.5. Summary of HFIR A212B(LT), nozzle-weld and seam-weld surveillance-program dpa(n+γ) values E-9
Table E.6. Summary of updated values of calculated (unnormalized) neutron and gamma dpa rates for HFIR surveillance capsule Keys for times before and after 22.7 EFPY (Table C.7 in [18]) E-11
Table E.7. Irradiation times and neutron and gamma "measured" dpa rates for surveillance capsules removed from HFIR in 2009 ..... E-14
Table F.1. "Measured" reaction rates for DOS-8 and HB-2-17,-18,-8 surveillance capsules (at a reactor power of 85 MW), and the normalization factors F-4
Table F.2. Irradiation parameters for surveillance capsules HB-2-8, HB-2-17, and HB2-1 at a reactor power of 85 MW F-5
Table F.3. Irradiation parameters for surveillance capsules HB-2-8, HB-2-17, and HB2-18, normalized to a reactor power of 100 MW F-6
Table G.1. Computer and code information G-3
Table G.2. Content of the archive directory, "hfir10" G-4

NOMENCLATURE, ACRONYMS, AND SYMBOLS

ASTM	American Society for Testing and Materials
BeHAFM	beryllium helium accumulation fluence monitors
CVN	Charpy V-notch (of test specimen)
C/M	Ratio of calculated to measured reaction rate
DOS	dosimeter
NDTT	nil-ductility transition temperature
ΔNDT	shift in nil-ductility transition temperature
EFPY	effective full-power years, 85 or 100 MW as indicated
EOC	end of (fuel) cycle
HFIR	High Flux Isotope Reactor
HMP	horizontal mid-plane of the reactor core
M/C	ratio of the measured and calculated reaction rate
NRC	US Nuclear Regulatory Commission
ORNL	Oak Ridge National Laboratory
PV	pressure vessel
RPV	reactor pressure vessel
Std	standard deviation

SYMBOLS

dpa	displacements per atom. The exposure index used to characterize neutron and gamma-ray irradiations of iron and low-alloy steels
T	time in EFPY
$\phi(E)$	energy-dependent neutron (n) or gamma (γ) flux, $\frac{n,\gamma}{cm^2 \cdot \mathrm{s} \cdot MeV}$
$\sigma(E)$	energy-dependent n or γ microscopic dpa cross section, displacements
$\chi 2$	chi-square: $\chi^2 = \vec{v}^T V_{rr}^{-1} \vec{v}$. The vector $\vec{r}$ is the (column) vector of the residuals, and V_{rr}^{-1} is the inverse matrix of the covariance matrix of the residuals V_{rr}

ACKNOWLEDGMENTS

The author wishes to acknowledge the contributions of E. D. Blakeman, who performed neutron and gamma-ray transport calculations; D. C. Glasgow, who carried out measurements of activation and fission dosimeters; B. M. Oliver (Pacific Northwest National Laboratory), who measured the helium concentration in beryllium dosimeters; and H. A. Kmieciak, Jr., who provided numerous comments and suggested improvements to this report. Special thanks go to R. D. Cheverton, C. R. Daily and S. K. Iskander, who performed independent reviews of this report.

EXECUTIVE SUMMARY

The High Flux Isotope Reactor (HFIR) has been in operation at Oak Ridge National Laboratory since 1966. The pressure vessel surveillance program uses surveillance capsules filled with Charpy V-notch specimens of vessel material, which are irradiated at locations referred to as "Keys," close to the pressure vessel inner wall and around the beam tube nozzles. Surveillance capsules also contain wires, located in the notches of Charpy specimens, which are used as neutron dosimeters. Selected surveillance capsules were removed from HFIR in 1969, 1974, 1982, 1986, 2005, and 2009. Since 1993 special dosimetry-dedicated capsules containing several neutron dosimeters, as well as dosimeters sensitive to both neutron and gamma rays, are irradiated during selected fuel cycles to provide more information on neutron and gamma-ray fields at the surveillance locations.

This report describes the analysis of dosimetry-dedicated capsules irradiated in 2008 and surveillance capsules removed in 2009. Furthermore, all surveillance and dosimetry-dedicated capsules removed before 2009 were reanalyzed with the intentions of eliminating potential differences arising from different transport calculations performed over a span of almost 20 years and of providing adjusted neutron and gamma dpa rates as consistently possible.

To make the most important results of this work readily available, they are summarized here in Tables ES.1 and ES.2. Table ES.1 provides adjusted and calculated neutron and gamma-ray dpa rates (at 100 MW) for all HFIR dosimetry-dedicated capsules removed through 2008. The ratios of adjusted-to-calculated values are given because they are used to normalize the calculated values at locations in the pressure vessel where measurements are not possible. These ratios are not listed for key K2C/2W because the key is offset from the concentric position. The adjusted values are given for the offset positions, while the calculated values are for the concentric positions; therefore, the ratios are not relevant for normalization purposes. The normalization factors for K2C/2W, which take into account the impact of the offset, are determined in ORNL/TM-2011/158. Table ES.2 provides measured neutron and gamma-ray dpa values for all HFIR pressure vessel material surveillance capsules through year 2009.

The dpa rates of the dosimetry-dedicated capsules and the dpa values of the surveillance capsules provided in this report supersede any previous values and should be used for the update of the HFIR pressure vessel surveillance program and the pressure vessel operating parameters, as well as for assessing the pressure vessel lifetime.

Table ES.1. Adjusted and calculated dpa rates (at 100 MW) for all HFIR vessel dosimetry-dedicated capsules removed through 2008

With-drawn (year)	Capsule ID	Location	Adjusted values		Calculated values[a]		Adj./Calc.	
			dpa(n)/s	dpa(γ)/s	dpa(n)/s	dpa(γ)/s	dpa(n)/s	dpa(γ)/s
			(s^{-1})	(s^{-1})	(s^{-1})	(s^{-1})		
1993	***b***	K2, P9	3.09E-12	1.28E-12	3.82E-12	1.52E-12	0.809	0.842
2004	DOS-1	K2W, P8	4.71E-12	2.71E-12	4.36E-12	2.59E-12	***c***	
2004	DOS-2	K2W, P32	5.02E-12	2.18E-12	4.36E-12	2.59E-12	***c***	
2004	DOS-8	K2C, P1	1.99E-10	1.14E-11	1.55E-10	1.02E-11	***c***	
2004	DOS-9	K2C, P4	1.94E-10	1.26E-11	1.55E-10	1.02E-11	***c***	
2008	DOS-7	K2C, P9	2.75E-10	1.83E-11	1.55E-10	1.02E-11	***c***	
2008	DOS-13	K2C, P13	2.69E-10	1.66E-11	1.55E-10	1.02E-11	***c***	
2004	HRB2-1G,1A	K2C, P2D1C	5.00E-11	7.95E-12	7.58E-11	3.60E-12	***c***	
2004	HRB2-2G,2A	K2C, P2D2C	7.14E-11	4.05E-12	7.58E-11	3.60E-12	***c***	
2004	HRB2-1G,-1A	K2W, P2D1W	1.95E-12	1.15E-12	2.10E-12	1.31E-12	***c***	
2004	HRB2-2G,-2A	K2W, P2D2W	2.14E-12	1.18E-12	2.10E-12	1.31E-12	***c***	
2004	HRB2-3G,-3A	K2W, P2D3W	2.28E-12	1.40E-12	2.10E-12	1.31E-12	***c***	
2004	DOS-3	K3P3	2.49E-12	1.64E-12	2.60E-12	1.26E-12	0.958	1.30
2004	DOS-4	K3 P8	5.11E-12	1.23E-12	4.40E-12	1.16E-12	1.16	1.06
2004	DOS-5	K3 P10	3.63E-12	1.11E-12	3.55E-12	1.19E-12	1.02	0.933
1993	***d***	K4 P2	1.13E-12	1.33E-12	1.27E-12	1.30E-12	0.890	1.02
1993	***e***	K4 P10	1.60E-12	7.87E-13	1.81E-12	1.06E-12	0.884	0.742
2008	DOS-10	K4 P3	1.25E-11	3.78E-12	1.39E-11	4.01E-12	0.899	0.943
2008	DOS-11	K4 P8	1.81E-11	4.24E-12	2.03E-11	3.71E-12	0.892	1.14
2008	DOS-12	K4 P10	1.41E-11	3.48E-12	1.81E-11	3.81E-12	0.779	0.913
2008	HRB4-1G,-1A	K4, P4D1	1.33E-11	2.77E-12	2.01E-11[f]	2.34E-12[f]	0.662	1.18
2008	HRB4-2G,-2A	K4, P4D2	1.26E-11	2.84E-12	1.58E-11[f]	1.68E-12[f]	0.797	1.69
2008	HRB4-3G, -3A	K4, P4D3	8.53E-12	1.90E-12	1.35E-11[f]	1.46E-12[f]	0.632	1.30
2004	DOS-6	K7 P1	1.38E-13	1.13E-12	2.93E-13	1.92E-12	***g***	
1993	***h***	K7 P5	2.99E-13	1.34E-12	3.72E-13	1.70E-12	0.804	0.788

[a]Calculated values from Table C.7 in TM-13693/S2; the values are for the K2C/2W position concentric with the beam tube.
[*b*]Capsules DOS2-29 and DOS3-29.
[*c*]Key K2C/2W is offset from concentric position; the Adj. values are for the offset positions, and the Calc. values are for concentric positions; therefore Adj./Calc. ratios are not relevant for normalization purposes. See ORNL/TM-2011/158.
[*d*]Capsules DOS2-42 and DOS3-42.
[*e*]Capsules DOS2-410 and DOS3-410.
[f]Calculated values from fax from Ed Blakeman to R.D. Cheverton, dated 2-17-2012; the values are for the K2C/2W position concentric with the beam tube.
[*g*]During the irradiation of DOS-6, the HR-4 beam tube was not installed; Adj./Calc. values are not relevant.
[*h*]Capsules DOS1-75, DOS2-75, DOS3-75, DOS4-G-75, and DOS4-75.

Table ES.2. Summary of "measured" dpa values for HFIR vessel materials through year 2009

Capsule	Year removed from HFIR	$NDTT_O$ (°F)	dpa × 10^4 "meas"		dpa × 10^4 (n + γ)
			n	γ	
		A350LF3			
HB-2-10, -13	1969	–110	2.28	0.943	3.22
HB-3-49, -53		–80	2.32	0.840	3.16
HB-2-12, -15	1974	–110	6.28	2.60	8.88
HB-3-45, -52		–80	7.11	2.84	9.95
HB-2-14	1983	–110	14.6	6.05	20.7
HB-3-43		–80	11.6	7.71	19.3
HB-2-9, -11	1986	–110	17.1	7.07	24.2
HB-3-42, -48, -50		–80	18.6	8.25	26.9
HB-2-8, -17, -18	2005	–110	92.0	13.2	105
HB-2C-1, -2, -3	2009	–110	180	12.0	192
HB-3-41, -46		–80	175	18.2	193
		A350FL3 half-sized CVN specimens			
HB-2C-10, -11	2009	–110	158	9.46	167
		A105II			
HB-1-19, -21 HB-4-36, -37	1969	–80	1.02	0.758	1.78
HB-1-20, -26 HB-4-30, -33	1974	–80	3.21	2.10	5.31
HB-1-27 HB-4-40	1983	–80	7.47	4.90	12.4
HB-1-25 HB-4-31, -33	1986	–80	10.1	5.15	15.3
		A212B (LT)			
HB-1A-61 HB-4A-72	1983	–5	1.84	6.86	8.70
HB-1A-68, -69 HB-4A-73, -77	1986	–5	1.95	7.84	9.79
HB-1A-64, -71 HB-4A-76	1993	–5	1.38	9.03	10.4
HB-1A-62, -65, -70	2009	–5	5.07	11.4	16.5
		A212B (LS)			
LS-1-1, -2, -3	2009	–10	5.89	3.60	9.49
		Nozzle weld			
NW-2-1, -4, -8	1993	0	1.65	0.681	2.33
NW-2-2, -3	2009	0	8.85	4.02	12.9
		Seam weld			
SW-1-7, -8, -9	1993	–5	0.598	0.712	1.31
SW-6-4, -5, -6	2009	–5	0.675	3.49	4.17

ABSTRACT

The High Flux Isotope Reactor (HFIR) has been in operation at Oak Ridge National Laboratory since 1966. A comprehensive pressure vessel surveillance program was developed to check and monitor the radiation-induced damage to the pressure vessel material and the resulting impact on the safety limits for operation of the vessel, as well as on the vessel life. This report describes the analysis of the dosimetry-dedicated capsules removed in 2008 and of the surveillance capsules removed in 2009 and provides best-estimate irradiation parameters obtained with the analysis. All dosimetry and surveillance capsules withdrawn from HFIR prior to year 2008 were reanalyzed to ensure that a consistent set of calculated neutron and gamma fluxes, obtained from the most up-to-date transport calculations, was used. The dpa values for surveillance capsules provided in this report supersede any previous values and should be used to determine the embrittlement trend curves for HFIR pressure vessel materials.

1. INTRODUCTION

The High Flux Isotope Reactor (HFIR) was designed and built at Oak Ridge National Laboratory (ORNL) in the late 1950s and early 1960s. A comprehensive pressure vessel (PV) surveillance program was developed to check and monitor the radiation-induced damage to the pressure vessel material and the resulting impact on the safety limits for operation of the vessel, as well as on the vessel life.[1] The surveillance program uses Charpy V-notch (CVN) specimens of vessel material and radiometric monitors (dosimeters) located at the PV inner wall and at the beam-line nozzles, as shown in Fig. 1. Seven surveillance locations, referred to as "Keys," are used. At each key, capsules containing Charpy specimens are irradiated.

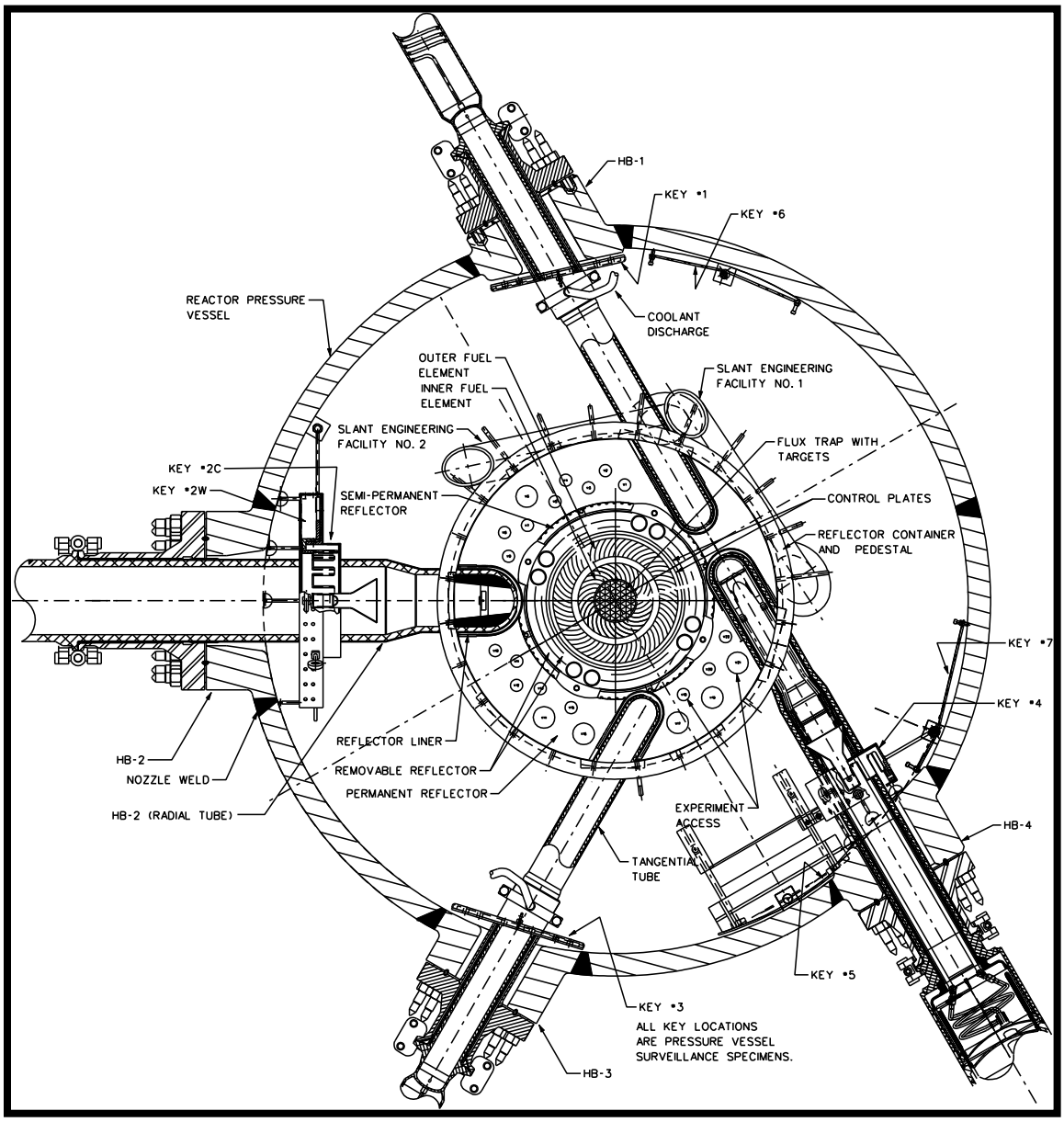

Fig. 1. Cross section of HFIR core and PV at core horizontal midplane. The locations of surveillance specimens—"Keys"—are numbered 1–7.

Surveillance capsules were removed from HFIR in 1969, 1974, 1983, and 1986. The 1983 and 1986 testings of the CVN specimens revealed greater-than-expected change in the nil-ductility transition temperature (NDTT). As a result, the HFIR operating pressure was lowered, requiring a reduction in reactor power from 100 to 85 MW.[2] In addition, periodic hydrostatic proof testing was introduced, additional capsules of vessel material were installed, and the capsule removal schedule was modified. In 1993, research into the cause of the higher-than-expected radiation damage rates identified gamma radiation as the reason for additional damage.[3]

In late 1990, an initiative to increase the diameter of horizontal beam line 2 (HB-2) and HB-4 was launched, with the provision that the increase would not excessively reduce PV lifetime. A new PV lifetime study,[4] using techniques proposed in 1993,[5] indicated that by updating criteria and methods of analysis, 50 EFPY(100 MW) could be achieved; however, another modification of the PV surveillance program was necessary, and installation of dosimeters sensitive to both neutron and gamma rays was required to determine the radiation damage rates.[6]

The larger HB-2 beam tube was installed during the end-of-cycle 384 outage in April 2002. The beam tube remained out of service until December 2003, at which time it was placed into operation (in cycle 398). Dosimetry experiments were performed in 2004 during fuel cycles 400 and 401, which occurred in May and July, respectively.[7]

Three surveillance capsules were removed from key 2C after completion of cycle 406B in July 2005 and subsequently analyzed.[8,9] Results provided data for another update of the HFIR PV surveillance program and operating parameters.[10]

The new (enlarged) beam tube was installed at HB-4 after cycle 407B, and it was put in operation in cycle 408.

In the latest PV surveillance effort, dosimetry-dedicated capsules were irradiated at Key 2C and Key 4 in 2008 and several surveillance capsules containing CVN specimens were removed at the end of cycle 425B, on December 21, 2009.

This report describes the analysis of dosimetry-dedicated capsules irradiated in 2008 and surveillance capsules removed in 2009 and it provides irradiation parameters for these capsules. In addition, the report provides reanalysis of all surveillance and dosimetry-dedicated capsules removed before 2009.

The structure of this report is as follows. Section 2 provides details on the locations, irradiation time, and removal time of dosimetry-dedicated capsules removed in 2008. Section 3 gives corresponding details for the surveillance capsules removed in 2009. Section 4 briefly describes the analysis. Section 5 provides best-estimate irradiation parameters and discussion of the results. Section 6 gives the conclusions.

Details relevant for the capsules removed in 2008 and 2009 are given in the Appendices A, B, and C. Appendix A contains the measured specific activities and helium concentrations, irradiation histories, and specifications of materials used for dosimetry. Appendix B lists the calculated neutron and gamma fluxes and the neutron and gamma-ray dpa* cross sections. Appendix C provides the comparison of the measured and calculated reaction rates for the dosimeters from the dosimetry-dedicated capsules and wedge wires from surveillance capsules.

Appendix D provides results of the reanalysis of all dosimetry-dedicated capsules removed before 2008.

---

*displacements per atom (dpa) is exposure index used to characterize neutron and gamma-ray irradiations of iron and low alloy steels.

Appendix E gives the updated neutron and gamma-ray dpa values for all surveillance capsules removed from HFIR before 2009 and includes the capsules removed in 2009. The dpa values for surveillance capsules provided in this report supersede any previous values and should be used to determine the embrittlement trend curves for HFIR PV materials.

Appendix F provides updated neutron and gamma-ray dpa rates for the surveillance capsules HB-2-8, HB-2-17, and HB-2-18, which were originally analyzed in 2006.

Appendix G, which concludes the report, lists the codes used in the analysis and the archived data.

All irradiation parameters, reaction rates, and neutron and gamma–ray fluxes given in this report are normalized to the reactor power of 85 MW, except where it is explicitly stated otherwise; the exceptions occur most frequently and consistently in Appendix E, where dpa values of the surveillance capsules are determined.

2. DOSIMETRY-DEDICATED CAPSULES REMOVED IN 2008

The dosimetry experiment performed during cycles 415 to 418 used a total of 206 activation dosimeters and 8 beryllium helium accumulation fluence monitors (Be HAFMs). The dosimeters were placed in either aluminum or gadolinium vials to allow or eliminate exposure to thermal neutrons, respectively. Each gadolinium vial included $^{237}NpO_2$, Be HAFM, Ni, and Co wire, and some vials included a diluted cobalt wire in the form of 0.116 wt % Co/Al alloy. Each aluminum vial contained Cu, Ni, Fe, and Co wire, and some vials contained a diluted Co wire in the form of 0.116 wt % Co/Al alloy.

Two types of capsules were used to hold the dosimeter vials: surveillance-type dosimeter (DOS) capsules and tubular capsules, as shown in Fig. 2. A DOS capsule is identical to the standard CVN surveillance capsule except that it is filled with a pair of stainless steel inserts that have three slots into which the dosimeter vials are placed. For each DOS capsule, a gadolinium vial was placed in the central position, and aluminum vials were placed in the two peripheral positions. Two types of DOS capsules were used. Type "A" DOS capsules had horizontal slots for the vials, while type "B" capsules had vertical vial slots. Type "A" capsules were used in keys where the capsules are placed perpendicular to the beam tube, while type "B" capsules were positioned parallel to the beam tubes. This was done to minimize the flux gradient across dosimeter vials. Tubular dosimeter capsules are long tubes with two positions for dosimeter vials. In certain tubular capsules, only the bottom location was used for dosimeters. Complete information about the dosimetry capsules and the dosimeters can be found in Ref. 11.

Surveillance-type and tubular-type dosimetry capsules removed from HFIR in 2008 are listed in Table 1 and Table 2, respectively. For each capsule, the following information is provided: the identification of the vial containing dosimeters, the capsule location during the irradiation, and the HFIR fuel cycles during which the capsule was irradiated. A total of five surveillance-type capsules were removed; three capsules were irradiated at Key 4 and 2 capsules at Key 2C. They were irradiated during fuel cycles 415 and 416. The six tubular-type capsules were irradiated at Key 4; three capsules with dosimeters in gadolinium vials were irradiated during fuel cycles 415 and 416; three capsules with dosimeters in aluminum vials were irradiated during cycles 417 and 418.

The locations of the surveillance-type dosimetry capsules are shown in Fig. 3. Figure 4 depicts the locations of the holders for the tubular-type dosimetry capsules at Key 4, and

Fig. 5 shows the locations of the dosimetry capsules around the HB-4 beam tube.

After the irradiation, the activation and fission dosimeters were measured with high-resolution gamma-ray spectrometers at the Neutron Activation Analysis Facility of the ORNL Chemical Sciences Division. The complete report is cited in Ref. 12. The measured specific activities of capsules irradiated during cycles 415 and 416 are listed in Table A.1 of Appendix A. The measured specific activities of capsules irradiated during cycles 417 and 418 are listed in Table A.3 of Appendix A. The dosimeter activities are grouped by irradiation locations; all activities measured "at the same location" are listed in one group. The helium concentrations in the Be HAFMs were measured at Pacific Northwest National Laboratory; the complete report is cited in Ref. 13, and the results are summarized in Table A.2 of Appendix A.

The HFIR reactor power vs time histories for fuel cycles 415 to 418 are given in A.4 and A.5 in Appendix A. The power versus time history is needed to convert specific activities to the cycle-time-averaged reaction rates.

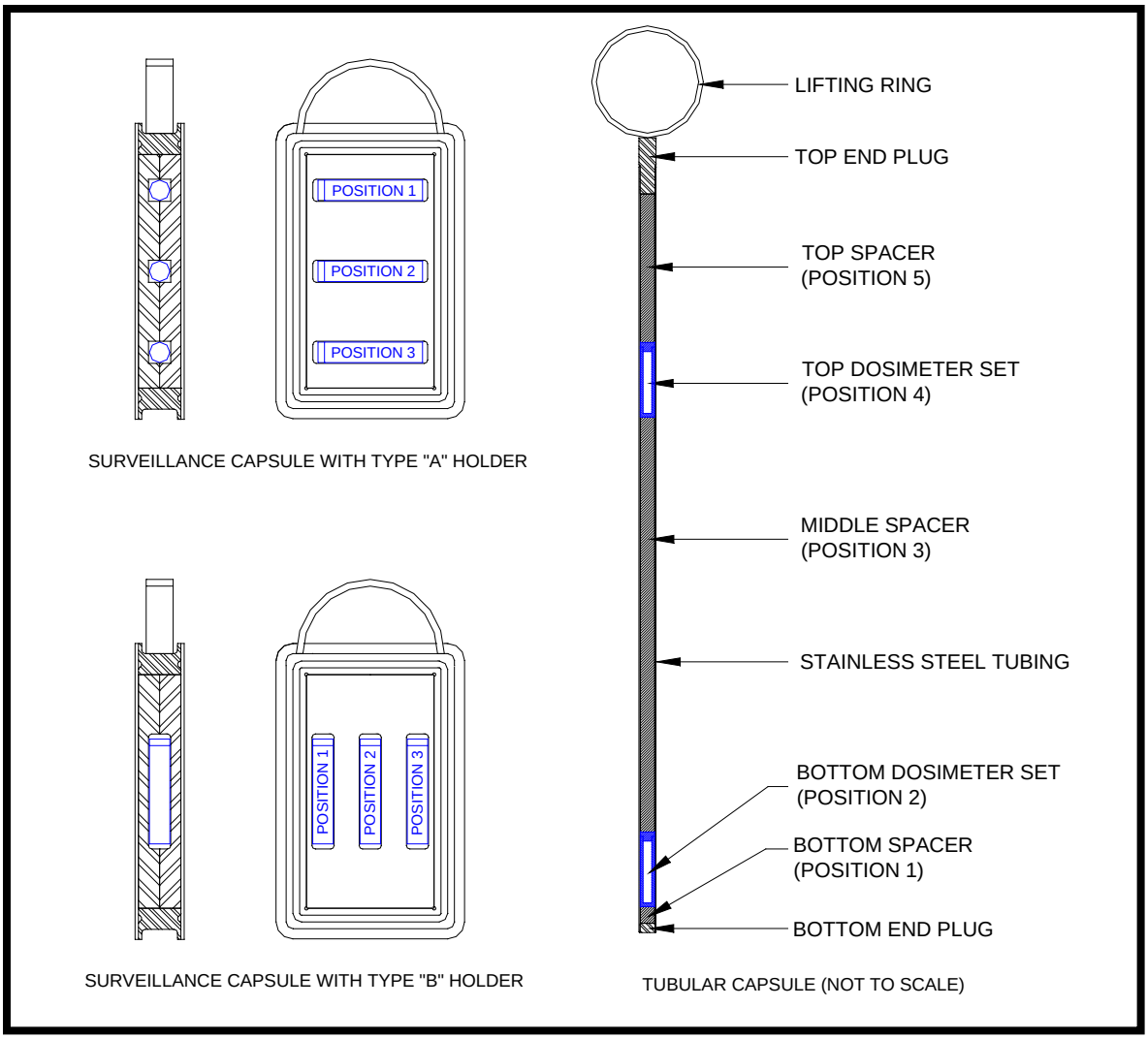

Fig. 2. Capsules for HFIR dosimeter experiments. *At left, the surveillance-type capsules are shown; at the top is the type "A" capsule and at the bottom is the type "B" capsule.* The numbering of the locations for dosimeter vials is shown; orientation of a vial is important in radiation fields with strong gradients. At the right is the tubular capsule. In the tubular capsules, which were installed around the HB-4 beam line, the dosimeter vials were placed in Position 2 (at the bottom) which corresponded to the "nozzle corner" location.

Table 1. DOS capsules. For each DOS capsule, the following information is provided: capsule location during irradiation (HFIR key number and position number), the IDs and locations of the vials containing dosimeters; the type of capsule; and the HFIR fuel cycle during which the capsule was irradiated.

HFIR key	Key position	Capsule ID	Vial ID			Capsule type[a]	Irradiation cycles
			Position 1	Position 2	Position 3		
4	3	DOS-10	AL-19	GD-10	AL-20	B	415, 416
4	8	DOS-11	AL-21	GD-11	AL-22	B	415, 416
4	10	DOS-12	AL-23	GD-12	AL-24	B	415, 416
2C	9	DOS-07	AL-13	GD-07	AL-14	A	415, 416
2C	13	DOS-13	AL-25	GD-13	AL-26	B	415, 416

[a]The type (A or B) of capsule determines the orientation of the vials in the capsule (see surveillance capsule sketch in Fig. 2).

Table 2. Tubular-type dosimeter capsules. For each tubular capsule, the following information is provided: capsule location during irradiation; the IDs and locations of the vials containing dosimeters; and the HFIR fuel cycle during which the capsule was irradiated.

HFIR key	Key position	Capsule ID	Vial ID	Irradiation cycles
			Position 2	
4	4D1	HRB4-1G	GD-19	415, 416
4	4D2	HRB4-2G	GD-20	415, 416
4	4D3	HRB4-3G	GD-21	415, 416
4	4D1	HRB4-1A	AL-32	417, 418
4	4D2	HRB4-2A	AL-33	417, 418
4	4D3	HRB4-3A	AL-34	417, 418

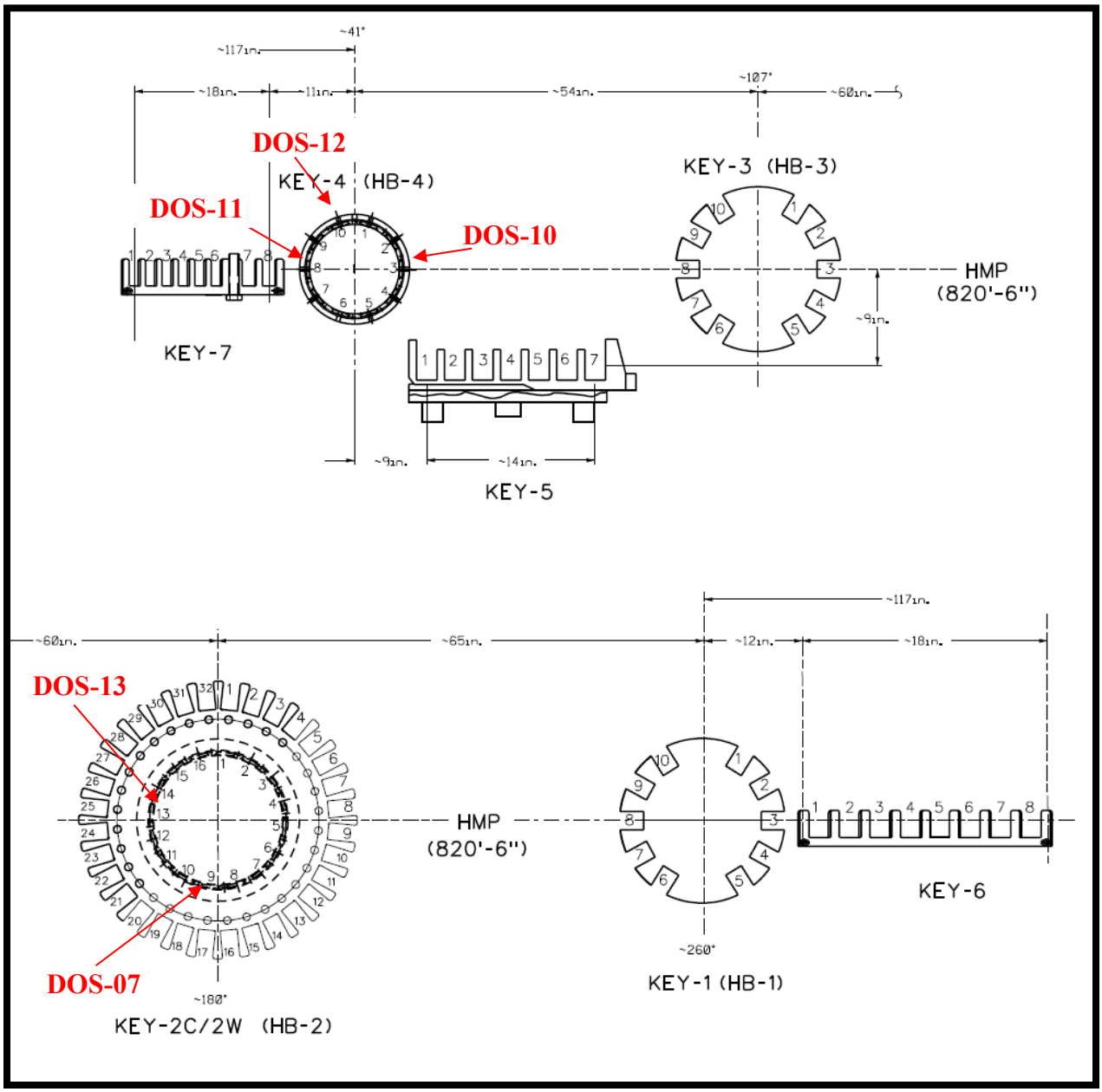

Fig. 3. Schematic view of the HFIR surveillance keys with numbered positions of surveillance-specimen capsules. The view is from the core to the PV. Locations of surveillance-type dosimeter capsules used in the dosimetry experiment are shown in red.

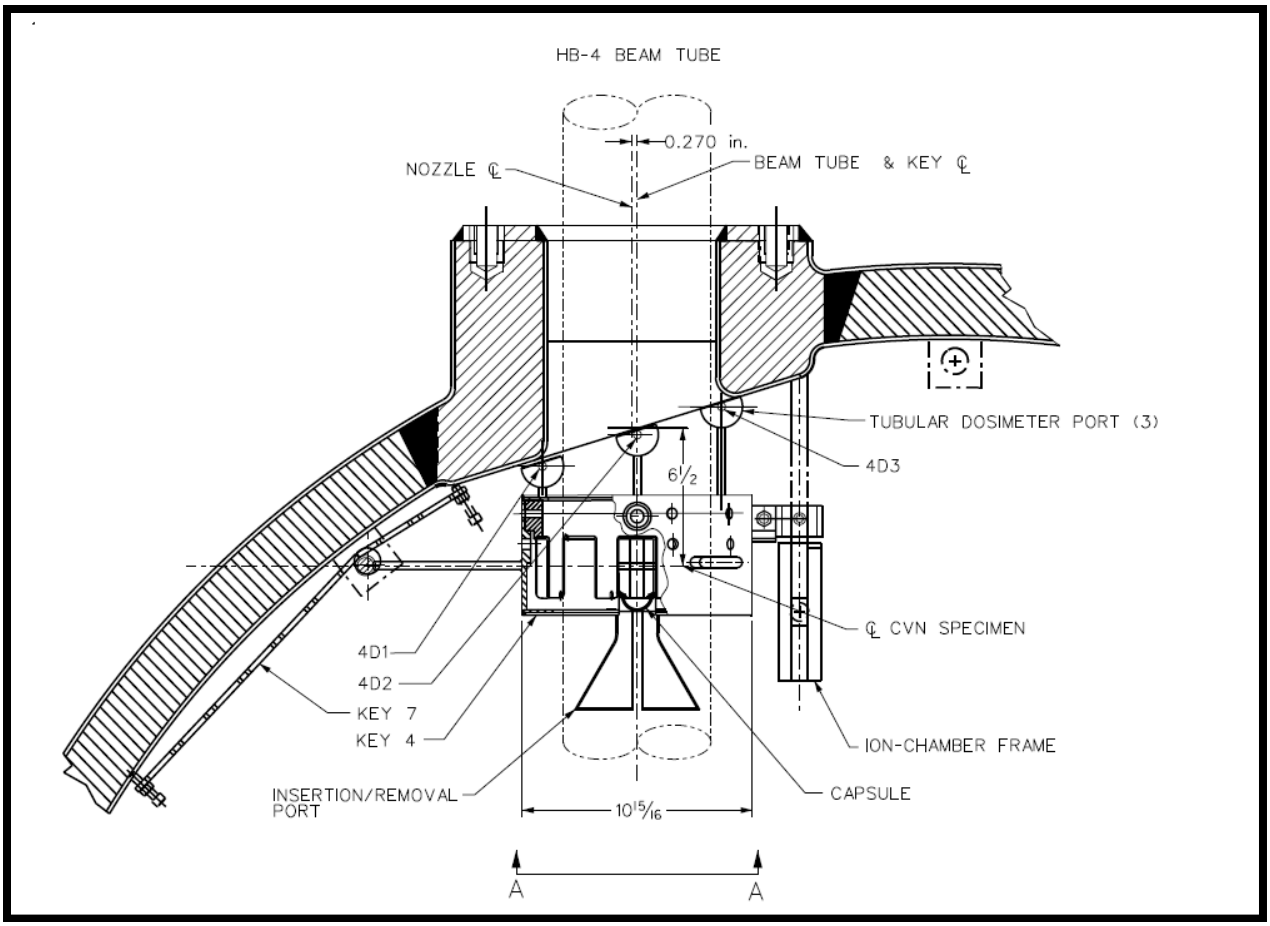

Fig. 4. Horizontal section of the HB-4 beam tube. The locations of tubular-type dosimeter capsules as well as CVN capsules are shown.

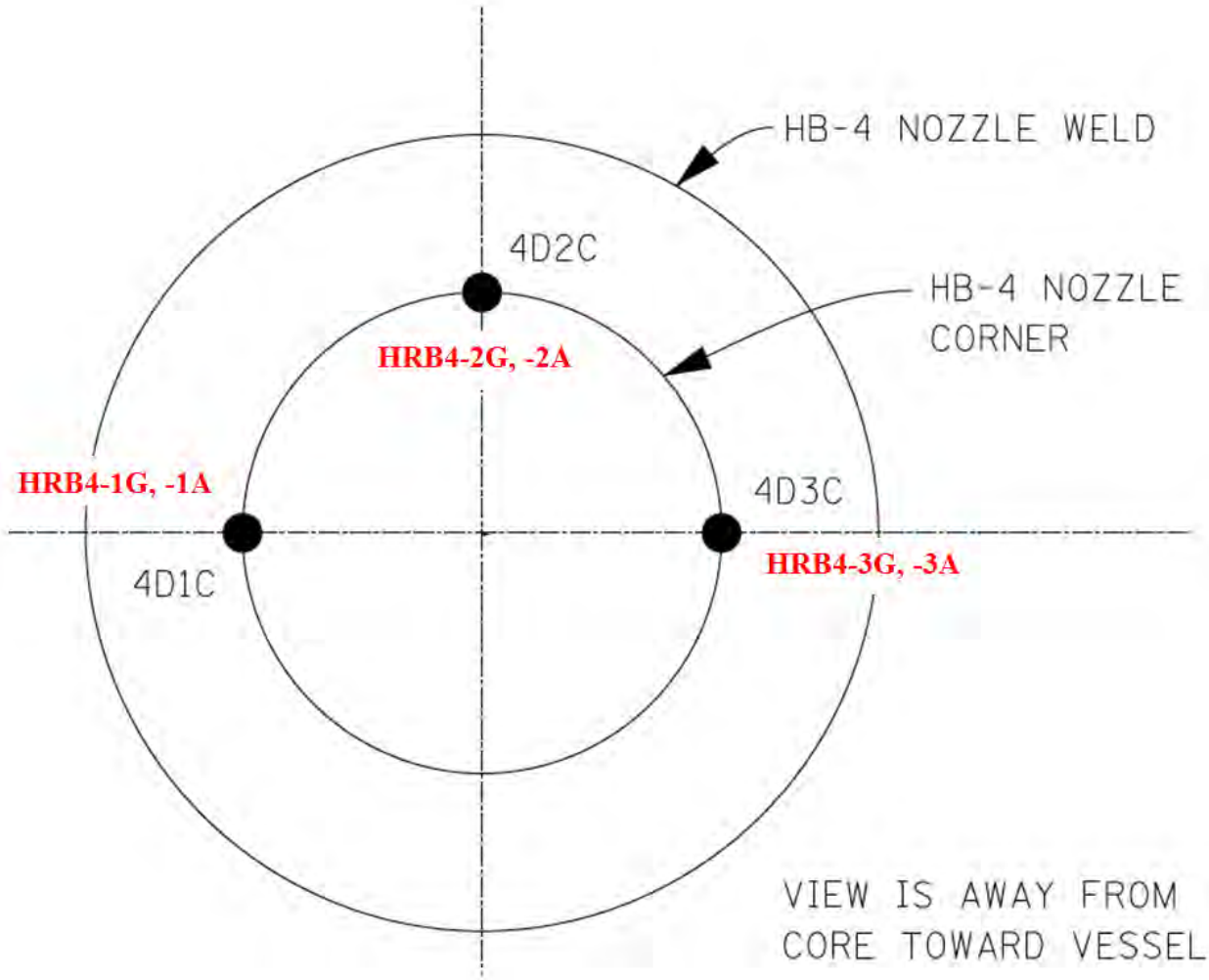

Fig. 5. Schematic drawing of the section perpendicular to the HB-4 axis. The locations of tubular dosimeters are shown. Since all dosimeters were irradiated at the locations corresponding to the nozzle corner, the letter "C" was dropped from the location IDs used in this report. The tubular-type dosimetry capsule IDs are shown in red.

3. SURVEILLANCE CAPSULES REMOVED IN 2009

On December 21, 2009, several surveillance capsules containing CVN specimens were removed. From Key 2C, five capsules with full-size CVN specimens and two capsules with half-size CVN specimens were withdrawn. From Key 2W, eight capsules with full-size CVN specimens and from Key 6, three capsules with full-size CVN specimens were removed. Locations of the capsules within Keys are shown in Figs. 6 and 7. Details about these capsules are listed in Tables 3–6.

Before irradiation, wires were inserted in the V-notches of these CVN specimens, as illustrated in Figs. 8 and 9. The wires serve as neutron activation dosimeters. Most of the withdrawn capsules contained steel flux wire, while some contained nickel and iron dosimetry-grade wires; details are given in the footnotes to Tables 3 and 6. The material specification sheets for the flux wires and dosimetry-grade wires are shown in Figs. A.1–A.4 in Appendix A.

After the irradiation, the wedge wires were segmented and the activities were measured with high-resolution gamma-ray spectrometers at the Neutron Activation Analysis Facility of the ORNL Chemical Sciences Division. The complete report is given in Ref. 14. The measured specific activities are listed in Tables A.6–A.8 in Appendix A. Several segments of each wire were measured and are reported in the tables. There is usually little variation in the specific activities of the different segments of the same wire; therefore, it is feasible to calculate the average of the specific activities of the segments and perform further analysis with the average value. For this reason, Tables A.6–A.8 also list the average specific activity for each wire.

Table 3. Surveillance capsules with full-size CVN specimens removed from Key 2C in 2009

Capsule ID	Post Be-outage irradiation		Pre Be-outage irradiation		CVN type	CVN material	Dosimeter mat.	Specimen IDs	EFPY at 100 MW
	Location	Cycles	Location	Cycles					
HB-3-41	K2C, P3	385-425B[a]	K3, P10	1-382	Full	A350LF3[b]	Wedge[c]	D-5, D-6, D-8	25.01
HB-3-46	K2C, P4	385-425B[a,d]	K3, P7	1-382	Full	A350LF3[b]	Wedge[c]	D-33, D-34, D-35	24.95
HB-2C-1	K2C, P5	385-425B[a]	NA	NA	Full	A350LF3[e]	1-Ni, 1-Fe[f]	C-63, C-64, C-65	2.31
HB-2C-2	K2C, P6	385-425B[a]	NA	NA	Full	A350LF3[e]	1-Ni, 1-Fe[f]	C-66, C-67, C-68	2.31
HB-2C-3	K2C, P7	385-425B[a]	NA	NA	Full	A350LF3[e]	1-Ni, 1-Fe[f]	C-69, C-70, C-71	2.31

Note: Details about the capsules are provided in TM-1372 and TM-1372/S2 [1, 6]. The "Pre Be outage location" refers to the location of the capsule before the Be reflector exchange, which was performed before the start of cycle 383A at the 22.7 EFPY (at 100 MW). Cycle 383A started on 12/18/2001.

[a]The enlarged HB-2 beam tube was not installed until EOC-384. The Key and capsules were in the reactor at the start of cycle 383; however, the neutron fluence accumulated before installation of the HB-2 beam tube is negligible.

[b]HB-3 nozzle A350LF3 material. See TM-10444, Table D.8 [2] for material analysis.

[c]Wedge material 304 SST, heat 59937 (see Appendix A, Fig. A.1, for material specifications).

[d]These capsules were removed from the reactor for cycle 400 to accommodate the HB-2 dosimetry experiment capsules.

[e]HB-2 nozzle A350LF3 material. See TM-10444, Table D.8 [2] for material analysis.

[f]Nickel and iron neutron dosimeter-grade material certifications (see Appendix A, Figs. A.3 and A.4 for material specifications).

Table 4. Surveillance capsules with half-size CVN specimens removed from Key 2C in 2009

Capsule ID	Post Be-outage irradiation		Pre Be-outage irradiation		CVN type	CVN material	Dosimeter material	Specimen IDs	EFPY at 100 MW
	Location	Cycles	Location	Cycles					
HB-2C-10	K2C, P14	385-425B[a]	NA	NA	Half	A350LF3[b]	2-Ni, 2-Fe[c]	C-93A, C-94A, C-95A, C-96A, C-101A, C-102A, C-103A, C-104A, C-105A, C-106A, C-107A, C-108A, C-109A, C-110A, C-111A, C-112A, C-113A, C-114A, C-115A, C-116A	2.31
HB-2C-11	K2C, P15	385-425B[a]	NA	NA	Half	A350LF3[b]	2-Ni, 2-Fe[c]	C-93B, C-94B, C-95B, C-96B, C-97B, C-98B, C-99B, C-100B, C-101B, C-102B, C-103B, C-104B, C-107B, C-108B, C-109B, C-110B, C-111B, C-112B, C-113B, C-114B, C-115B, C-116B, C-115B, C-116B	2.31

Note: Details about the capsules are provided in TM-1372, Supplement 2 [6]. The "Pre Be outage location" refers to the location of the capsule before the Be reflector exchange, which was performed before the start of cycle 383A, at the 22.7 EFPY (at 100 MW). Cycle 383A started on 12/18/2001.

[a]The enlarged HB-2 beam tube was not installed until EOC-384. The Key and capsules were in the reactor at the start of cycle 383; however, the neutron fluence accumulated before installation of the HB-2 beam tube is negligible.

[b]HB-2 A350LF3 material. See TM-10444, Table D.8 [2] for material analysis.

[c]Nickel and iron neutron dosimeter-grade material certifications (see Appendix A, Figs. A.3. and A.4for material specifications).

Table 5. Surveillance capsules with full-size CVN specimens removed from Key 2W in 2009

Capsule ID	Post Be-outage irradiation		Pre Be-outage irradiation		CVN type	CVN material	Dosimeter material	Specimen IDs	EFPY (100 MW)
	Location	Cycles	Location	Cycles					
HB-1A-62	K2W, P6	385-425B[a]	K6, P5; K6, P2[b]	1-382	Full	A212B(LT)[c]	Wedge[d]	A-18, A-19, A-23	25.01
HB-1A-65	K2W, P7	385-425B[a]	K6, P6; K6, P3[b]	1-382	Full	A212B(LT)[c]	Wedge[d]	A-132, A133, A-134	25.01
HB-1A-70	K2W, P8	385-425B[a,e]	K6, P4; K6, P1[b]	1-382	Full	A212B(LT)[c]	Wedge[d]	A-147, A148, A-149	24.95
LS-1-1	K2W, P23	385-425B[a]	K1, P1	288-382	Full	A212B(LS)[c]	Wedge[f]	LS-1, LS-2, LS-3	7.47
LS-1-2	K2W, P24	385-425B[a]	K1, P6	288-382	Full	A212B(LS)[c]	Wedge[f]	LS-4, LS-5, LS-6	7.47
LS-1-3	K2W, P25	385-425B[a]	K1, P10	288-382	Full	A212B(LS)[c]	Wedge[f]	LS-7, LS-8, LS-9	7.47
NW-2-2	K2W, P1	385-425B[a]	K2, P3	288-382	Full	Nozzle Weld[g]	Wedge[f]	NW-4, NW5, NW-6	7.47
NW-2-3	K2W, P2	385-425B[a]	K2, P5	288-382	Full	Nozzle Weld[g]	Wedge[f]	NW-7, NW-8, NW-9	7.47

Note: Details on these capsules are provided in TM-1372 and TM-1372/S1 [1, 6]. The "Pre Be outage location" refers to the location of the capsule before the Be reflector exchange, which was performed before the start of the cycle 383A, at the 22.7 EFPY (at 100 MW). Cycle 383A started on 12/18/2001.

[a]The enlarged HB-2 beam tube was not installed until EOC-384. The Key and capsules were in the reactor at the start of cycle 383; however, the neutron fluence accumulated before installation of the HB-2 beam tube is negligible.

[b]Key position changed in 1988 from the previous 1965 location.

[c]Material analysis: TM-10444, Table D.8 [2].

[d]Wedge material 304 SST, heat 59937 (see Appendix A, Fig. A.1).

[e]These capsules were removed from the reactor for cycle 400 to accommodate the HB-2 dosimetry experiment capsules.

[f]Wedge material 304L SST, heat 63366 (see Appendix A, Fig. A.2).

[g]Material analysis: TM-10444, Table D.9 [2].

Table 6. Surveillance capsules with full size CVN specimens removed from Key 6 in 2009

Capsule ID	Post Be-outage irradiation		Pre Be-outage irradiation		CVN type	CVN material	Dosimeter material	Specimen IDs	EFPY at (100 MW)
	Location	Cycles	Location	Cycles					
SW-6-4	K6, P6	383-425B	K6, P6	288-382	Full	Seam Weld/ Girth Weld[a]	Wedge[b]	SW-10, SW-11, SW-12	7.57
SW-6-5	K6, P5	383-425B	K6, P7	288-382	Full	Seam Weld/ Girth Weld[a]	Wedge[b]	SW-13, SW-14, SW-15	7.57
SW-6-6	K6, P8	383-425B	K6, P8	288-382	Full	Seam Weld/ Girth Weld[a]	Wedge[b]	SW-16, SW-17, SW-18	7.57

Note: Details of these capsules are described in TM-1372/S1 [6]. The "Pre Be outage location" refers to the location of the capsule before the Be reflector exchange, which was performed before the start of cycle 383A, at the 22.7 EFPY (at 100 MW). Cycle 383A started on 12/18/2001.
[a]Material analysis: TM-10444, Table D.9 [2].
[b]Wedge material 304L SST, heat 63366 (see Appendix A, Fig. A.2).

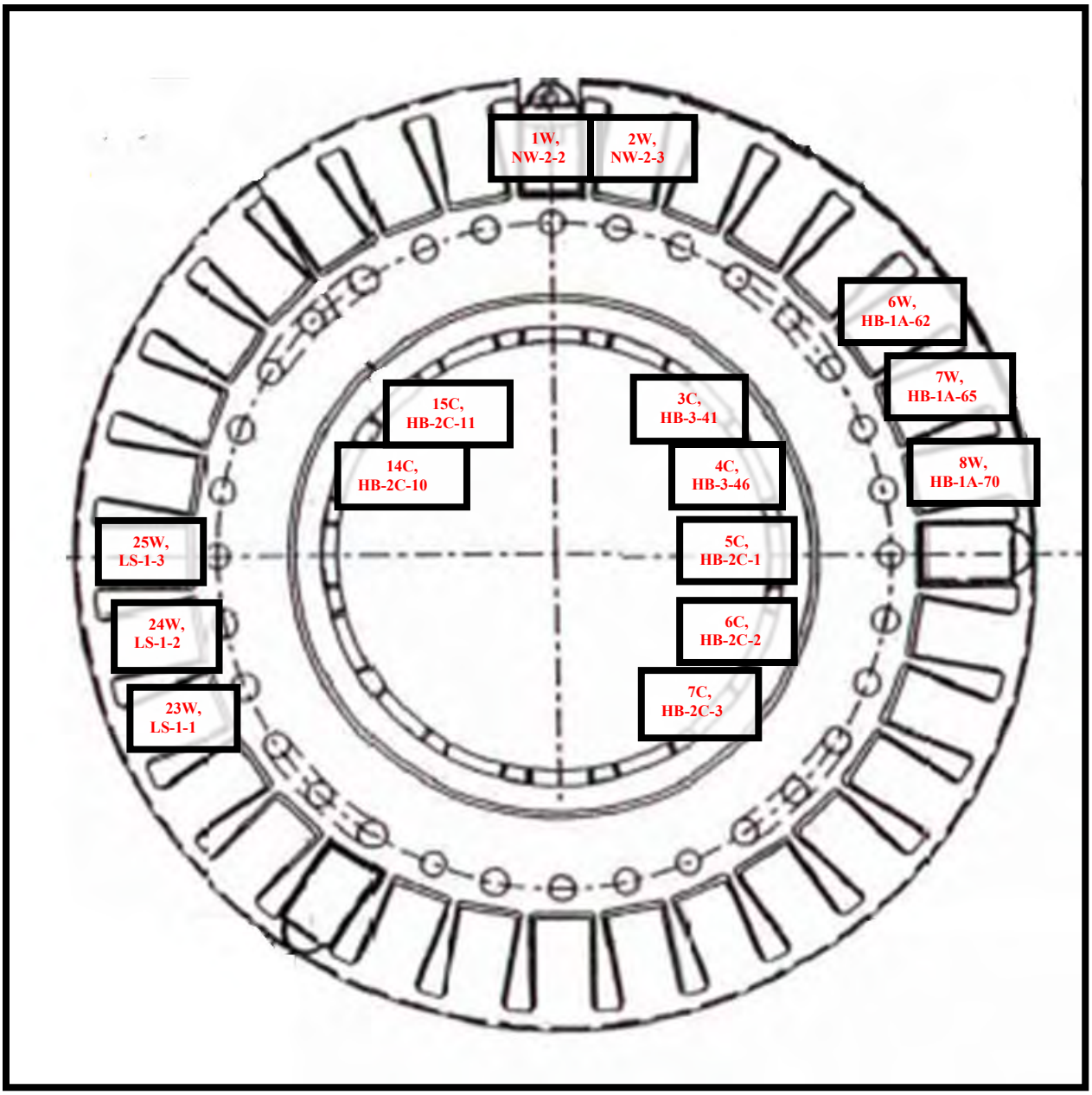

Fig. 6. Locations of the surveillance capsules removed from Key 2W and Key 2C.

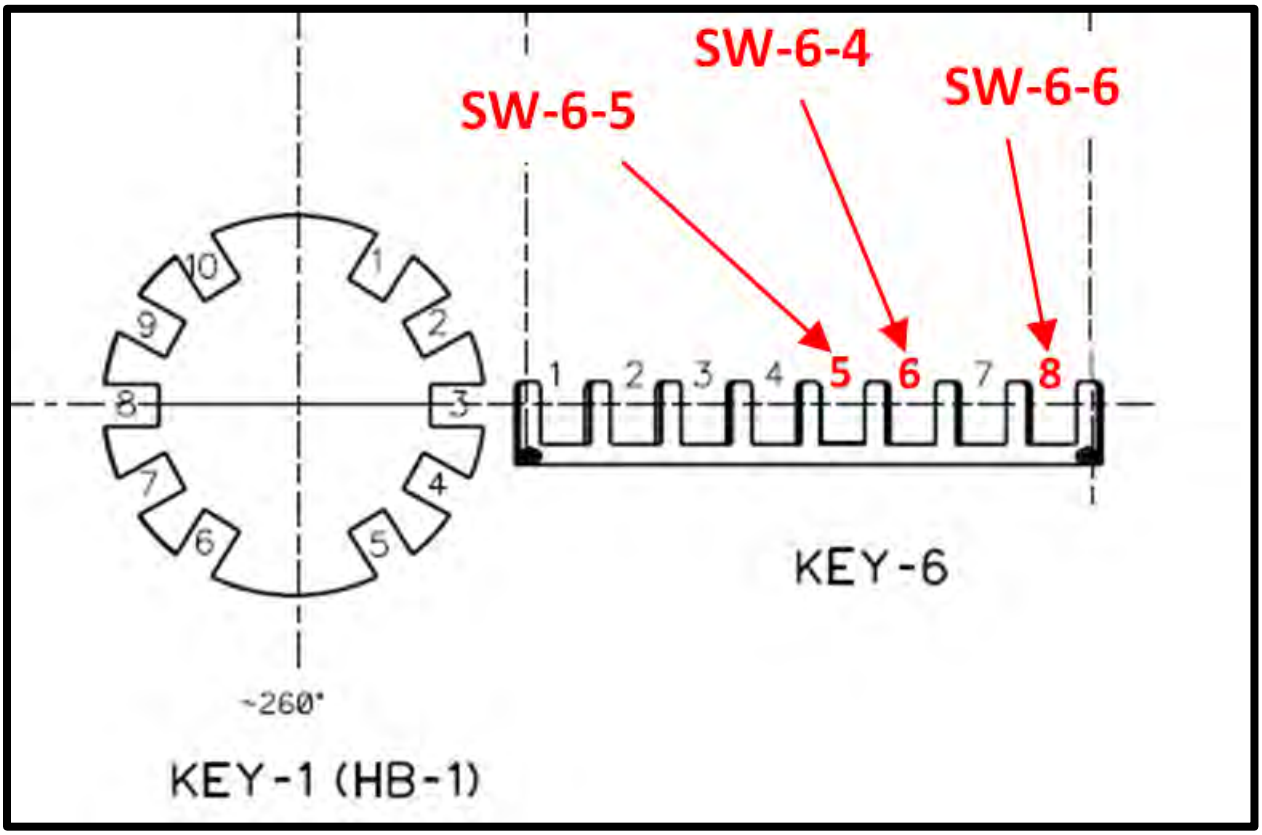

Fig. 7. Locations of the surveillance capsules with full-size CVN removed from Key 6.

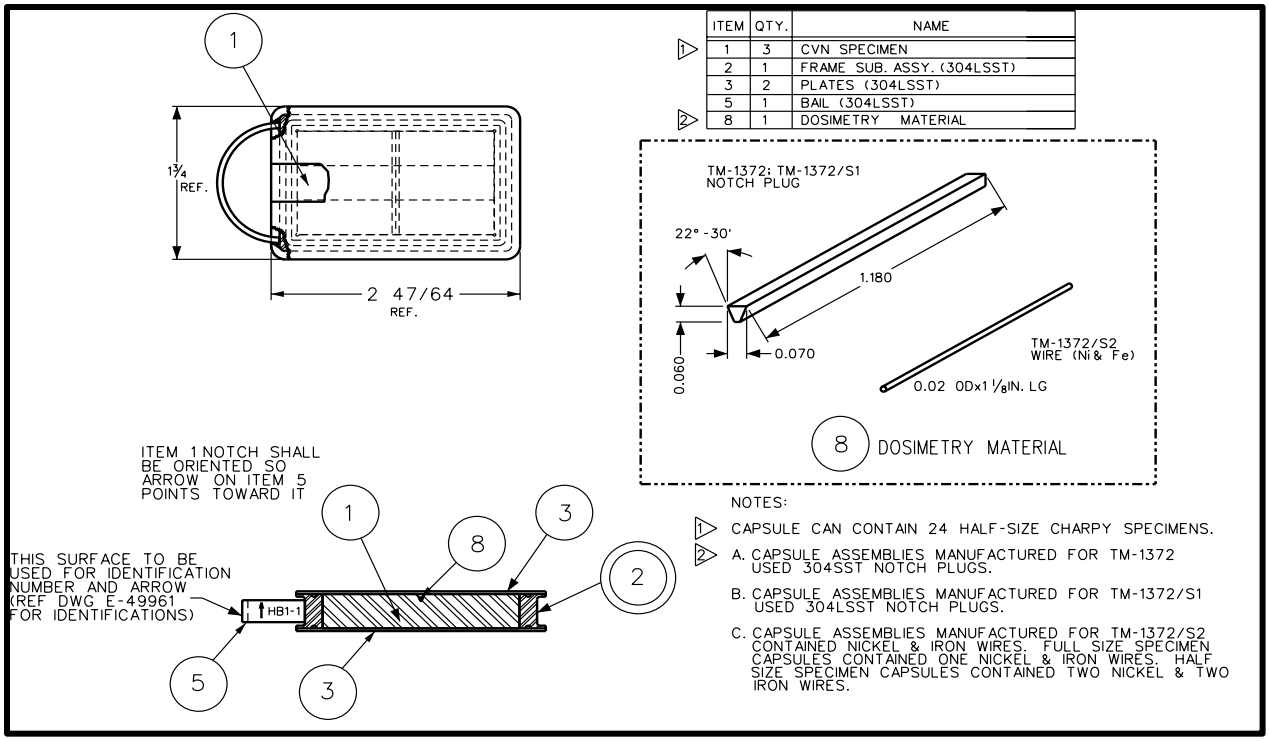

Fig. 8. Schematic drawing of a surveillance capsule containing full-size CVN specimens. The dosimetry wire, inserted in the V-notch of the CVN specimens, is also shown.

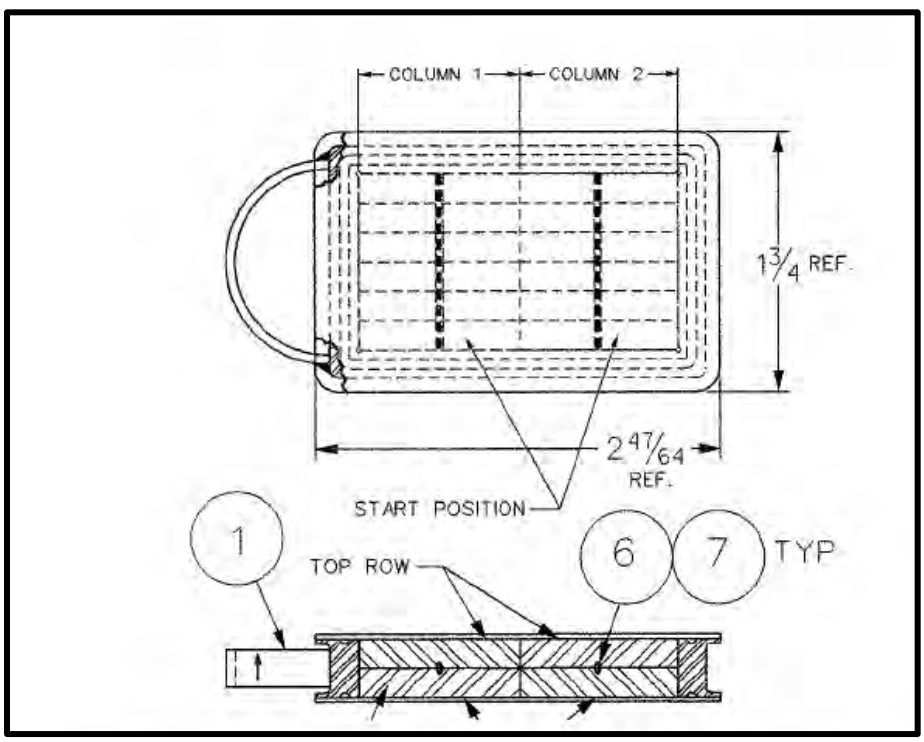

Fig. 9. Schematic drawing of a surveillance capsule containing half-size CVN specimens. The locations of the dosimetry wires, inserted in the V-notches of the CVN specimens, are also shown.

4. THE ANALYSIS

To obtain the best estimates of the radiation damage parameters from the interpretation and analysis of the physics dosimetry, the spectrum adjustment method used was consistent with the American Society for Testing and Materials (ASTM) standard E 944-08, "Application of Neutron Spectrum Adjustment Methods in Reactor Surveillance."[15] An extension of the methodology to accommodate both neutrons and gamma rays was developed in earlier HFIR analyses.[16,17]

The unique aspect of the HFIR radiation field is that, at locations away from the beam tubes, the gamma-ray field intensity is high enough to contribute significantly to the response of dosimeters such as neptunium fission monitors or Be HAFMs, as well as to the radiation damage to the PV material. Therefore, rather than using just neutron flux in determining the irradiation parameters, one needs to also consider the gamma-ray flux. The methodology for using a coupled neutron-gamma spectrum adjustment procedure, which is suitable for analyzing dosimetry experiments in such mixed fields, was developed in an earlier analysis of the HFIR PV surveillance dosimetry; this is reported in detail in Ref. 16 and is further described in Ref. 17.

The multigroup neutron and gamma fluxes at the locations of dosimeter capsules were obtained from transport calculations.[18,19] The calculated neutron and gamma fluxes are listed in Appendix B. Tables B.1 and B.2 list the energy groups of the 61 neutron and 23 gamma-energy groups, respectively. Tables B.3–B.16 list the calculated neutron and gamma fluxes. The group fluxes start with the neutron group fluxes ordered from the high to the low energy, followed with the gamma group fluxes again starting at the highest gamma-ray energy and ending with the lowest energy group.

The LSL-M2[20] computer code package was used to perform neutron and gamma spectrum adjustment calculations and other required data conversions and/or manipulations. The measured specific activities were converted to reaction rates with the ACT program from the LSL-M2 package. Separate runs were performed for the two irradiation campaigns: the first campaign consisted of cycles 415A, 415B, and 416, and the second campaign included cycles 417 and 418. The reactor core power vs time history was taken into account for each of the two irradiation campaigns. The measured reaction rates are listed in Table C.1 of Appendix C, which also provides the calculated reaction rates and the C/M and M/C ratios, which can be used to assess how well the transport calculations agreed with the measurement.

The neutron reaction cross sections needed to calculate the reaction rates were taken from the Cross-95 cross-section library[21] and were converted into the group structure used in the transport calculations with the FLXPRO code from the LSL-M2 package. The CALACT code was used to fold the calculated fluxes with the reaction cross sections to obtain the calculated reaction rates.

The FLXPRO code was also used to process cross-section covariance and flux covariance information into the group structure used for unfolding. The cross sections for photo-fission reactions were taken from Ref. 22 and for the photo-neutron reactions on ^{9}Be, from Refs. 23 and 24.

The complete uncertainty analysis of the neutron transport calculations is much more time consuming and expensive than the transport calculations themselves, and it was not performed for this analysis. Therefore, the HFIR-specific spectrum covariance information was not available, and the approximate neutron and gamma spectrum covariance matrix was prepared as in the previous analysis (Refs. 16 and 17), based in part on data from Ref. 25.

For a set of dosimeters considered in a single adjustment run, which included dosimeters irradiated within a single capsule, the standard deviations of the calculated fluxes were selected so that the χ2 (chi-square)∗ per degree of freedom for the adjustment calculation was approximately 1.00, which indicates that the differences between the measured and calculated reaction rates are consistent with the assigned standard deviations. A χ^2 per degree of freedom smaller than one means that the estimated uncertainties are likely conservative; therefore, in such cases when the flux uncertainties were ~20%, no attempt was made to further decrease the uncertainty of the calculated flux entering the adjustment calculation. This is based on the generally accepted estimate that the uncertainties of the calculated PV fluxes are typically in the range of 10 to 20% (e.g., see Ref. 26). The standard deviations listed in Tables 7–22 for the calculated irradiation parameters are therefore merely reflecting the uncertainties assumed for the calculated fluxes and do not necessarily represent the actual uncertainties of the calculations.

Uncertainties used for all "measured" reactions rates considered are shown in Table 23. The values listed represent estimates based on the guidance provided in the relevant ASTM standards (Ref. 27), previous experience, and critical examination of measurements available for this analysis; however, they were not obtained by rigorous propagation of the uncertainties through the measurement process.

For the surveillance capsule dosimetry wires only a small number of activities can be measured. Four activation products were measured in steel wires (reactions Fe54 (N,P) Mn54, Ni58 (N,P) Co58, Fe58 (N,G) Fe59, Co59 (N,G) Co60), and three for the Fe and Ni dosimetry wires (reactions Fe54 (N,P) Mn54, Ni58 (N,P) Co58, Fe58 (N,G) Fe59). The measured reaction rates are listed in Table C.3 for the capsules removed from Key 2C, in Table C.4 for the capsules removed from Key 2W, and in Table C.5 for the capsules removed from Key 6. The calculated reaction rates and the C/M and M/C ratios are also provided.

With such a limited number of specific activities measured in each surveillance capsule, determination of irradiation parameters via spectrum adjustment has no advantage over simply scaling the irradiation parameters from the dosimetry-dedicated capsules irradiated at nearby positions with the average ratio of the reaction rates for the Ni58 (N,P) Co58, and Fe54 (N,P) Mn54 reaction from the surveillance capsule and the selected dosimetry-dedicated capsule. This procedure was compared with alternative options in previous work (Ref. 9) and was found to provide adequate results; the total dpa(n + γ) rates obtained from scaling typically agreed to within 5–10% with the total dpa(n + γ) rates obtained from adjustment in which reaction rate measurements from the Charpy capsules were supplemented with reaction rate measurements from nearby dosimetry capsules. For the surveillance capsules removed from Key 6, no results from nearby dosimetry-dedicated capsules were available; therefore, the spectrum adjustment procedure was applied to determine the irradiation parameters. More details are provided in Sect. 5.

∗Chi-square per degree of freedom is defined as χ^2/N, where N is the number of residuals, and chi-square is $\chi^2 = \vec{v}^T V_{rr}^{-1} \vec{v}$. The vector $\vec{r}$ is the (column) vector of the residuals, and V_{rr}^{-1} is the inverse matrix of the covariance matrix of the residuals V_{rr}. For details, see Ref. [20].

Table 7. Summary of the adjusted irradiation parameters obtained by reanalysis of the dosimetry-dedicated capsules removed from HFIR before 2008

Location in HFIR[a] (Year Withdrawn)	Capsule ID and location within the capsule[b]	Neutron flux (E > 1 MeV)			Neutron dpa/s			Gamma dpa/s			(Neutron + gamma) dpa/s		
		Value ($cm^{-2}s^{-1}$)	±	Std.[c] (%)	Value (s^{-1})	±	Std.[c] (%)	Value (s^{-1})	±	Std.[c] (%)	Value (s^{-1})	±	Std.[c] (%)
K2; P9 (1993)	DOS2-29, DOS3-29 Pos. J	1.67E+9 (1.18E+9)	±	10 (12)	2.63E-12 (1.84E-12)	±	9 (8)	1.09E-12 (2.17E-12)	±	18 (20)	3.71E-12 (4.01E-12)	±	8 (11)
K2C; P1 (2004)	DOS-8[c]	1.01E+11 (1.01E+11)	±	9 (6)	1.69E-10 (1.73E-10)	±	7 (5)	9.70E-12 (9.73E-12)	±	22 (22)	1.79E-10 (1.83E-10)	±	6 (5)
K2C; P4 (2004)	DOS-9[c]	9.94E+10 (9.97E+10)	±	13 (9)	1.65E-10 (1.69E-10)	±	9 (7)	1.07E-11 (1.04E-11)	±	25 (25)	1.76E-10 (1.80E-10)	±	9 (6)
K2D;1C (2004)	HRB2-1G,-1A	2.18E+10 (2.23E+10)	±	14 (12)	4.25E-11 (4.48E-11)	±	8 (7)	6.76E-12 (6.13E-12)	±	32 (31)	4.92E-11 (5.09E-11)	±	8 (7)
K2D;2C (2004)	HRB2-2G,-2A	3.00E+10 (2.99E+10)	±	6 (6)	6.07E-11 (6.24E-11)	±	4 (4)	3.44E-12 (3.23E-12)	±	20 (21)	6.41E-11 (6.56E-11)	±	4 (4)
K2D;1W (2004)	HRB2-1G,-1A	8.87E+8 (8.97E+8)	±	6 (6)	1.66E-12 (1.71E-12)	±	6 (6)	9.76E-13 (9.71E-13)	±	7 (7)	2.64E-12 (2.68E-12)	±	5 (4)
K2D;2W (2004)	HRB2-2G,-2A	9.87E+8 (9.97E+8)	±	6 (6)	1.82E-12 (1.87E-12)	±	6 (6)	1.01E-12 (9.98E-13)	±	7 (7)	2.82E-12 (2.86E-12)	±	5 (4)
K2D;3W (2004)	HRB2-3G,-3A	1.09E+9 (1.10E+9)	±	6 (6)	1.94E-12 (1.99E-12)	±	6 (6)	1.19E-12 (1.18E-12)	±	7 (7)	3.13E-12 (3.17E-12)	±	5 (4)
K2W; P8 (2004)	DOS-1, Pos. 2[c]	2.69E+09 (2.74E+09)	±	7 (7)	4.00E-12 (4.10E-12)	±	6 (6)	2.31E-12 (2.31E-12)	±	8 (8)	6.31E-12 (6.40E-12)	±	5 (5)
K2W; P32 (2004)	DOS-2, Pos. 2[c]	2.89E+09 (2.94E+09)	±	7 (7)	4.27E-12 (4.36E-12)	±	6 (6)	1.85E-12 (1.84E-12)	±	7 (8)	6.12E-12 (6.20E-12)	±	5 (5)
K3; P3 (2004)	DOS-3, Pos. 2	1.18+09 (1.17+09)	±	15 (15)	2.11E-12 (2.15E-12)	±	13 (13)	1.39E-12 (1.38E-12)	±	9 (9)	3.50E-12 (3.54E-12)	±	9 (9)
K3; P8 (2004)	DOS-4, Pos. 2	2.64+09 (2.64+09)	±	17 (8)	4.34E-12 (4.38E-12)	±	15 (7)	1.05E-12 (1.05E-12)	±	16 (12)	5.39E-12 (5.43E-12)	±	13 (6)
K3; P10 (2004)	DOS-5, Pos. 2	1.78+09 (1.80+09)	±	11 (10)	3.08E-12 (3.16E-12)	±	10 (9)	9.41E-13 (9.40E-13)	±	9 (9)	4.02E-12 (4.10E-12)	±	8 (7)

Table 7. Summary of the adjusted irradiation parameters obtained by reanalysis of the dosimetry-dedicated capsules removed from HFIR before 2008 (continued)

Location in HFIR[a] (Year Withdrawn)	Capsule ID and location within the capsule[b]	Neutron flux (E > 1 MeV)			Neutron dpa/s			Gamma dpa/s			(Neutron + gamma) dpa/s		
		Value ($cm^{-2}s^{-1}$)	±	Std.[c] (%)	Value (s^{-1})	±	Std.[c] (%)	Value (s^{-1})	±	Std.[c] (%)	Value (s^{-1})	±	Std.[c] (%)
K4; P2 (1993)	DOS2-42, DOS3-42, Pos. J	4.51+08 (3.08+08)	±	11 (13)	9.65E-13 (6.62E-13)	±	9 (7)	1.13E-12 (1.29E-12)	±	9 (9)	2.10E-12 (1.95E-12)	±	6 (6)
K4; P10 (1993)	DOS2-410, DOS3-410, Pos. J	6.67+08 (4.19+08)	±	11 (12)	1.36E-12 (8.76E-13)	±	9 (7)	6.69E-13 (8.44E-13)	±	10 (10)	2.03E-12 (1.72E-12)	±	7 (6)
K7; P1 (2004)	DOS-6, Pos. 2	7.44+07 (7.06+07)	±	8 (6)	1.18E-13 (1.14E-13)	±	6 (6)	9.65E-13 (9.93E-13)	±	6 (6)	1.08E-12 (1.11E-12)	±	5 (5)
K7; P5 (1993)	DOS1-75, DOS2-75, DOS3-75, DOS4-G-75, DOS4-75, Pos. J	1.62+08 (1.57+08)	±	9 (8)	2.54E-13 (2.46E-13)	±	7 (7)	1.14E-12 (1.21E-12)	±	7 (7)	1.40E-12 (1.45E-12)	±	6 (6)

NOTE: See Tables D.1–D.17 for complete listing of data summarized in this table.
[a]K = Key, P = position in Key, W = nozzle weld, C = nozzle corner, D = tubular-type dosimeters.
[b]Locations are at the center of the capsules. See Fig. 2 for location of position 2. See drawing M-11511-OH-001-E-R1 for location of position J, used in the early dosimetry experiments.
[c]Percent standard deviation

`Table 8. Neutron, gamma, and total (n+ g) dpa rates for the surveillance capsules containing full size Charpy specimens removed from Key 2C in 2009
The values reported in the preliminary analysis[a] are given in parentheses. Specimens from several capsules were combined in metallurgic tests; for such groups of capsules the average values are given.

Capsule	Location in HFIR[b]	CVN material	dpa(n)/s	dpa(n, E < 0.414eV)/s	dpa(g)/s	dpa(n+g)/s
HB-2C-1	K2C, P5	A350LF3	1.94E-10 (1.95E-10)	2.65E-11	1.28E-11 (1.25E-11)	2.07E-10 (2.08E-10)
HB-2C-2	K2C, P6	A350LF3	2.11E-10 (2.12E-10)	2.88E-11	1.39E-11 (1.36E-11)	2.25E-10 (2.26E-10)
HB-2C-3	K2C, P7	A350LF3	2.28E-10 (2.29E-10)	3.12E-11	1.50E-11 (1.47E-11)	2.43E-10 (2.44E-10)
Average			**2.11E-10 ± 12% (2.12E-10 ± 12%)**	**2.88E-11± 11%**	**1.39E-11 ± 26% (1.36E-11 ± 26%)**	**2.25E-10± 12% (2.26E-10 ± 12%)**
HB-3-41	K2C, P3	A350LF3	1.75E-10 (1.79E-10)	2.14E-11	1.07E-11 (1.06E-11)	1.86E-10 (1.90E-10)
HB-3-46	K2C, P4	A350LF3	1.70E-10 (1.74E-10)	2.07E-11	1.04E-11 (1.02E-11)	1.80E-10 (1.84E-10)
Average			**1.72E-10 ± 7% (1.76E-10 ± 7%)**	**2.10E-11± 15%**	**1.05E-11 ± 23% (1.04E-11 ± 26%)**	**1.83E-10 ± 7% (1.87E-10 ± 7%)**

[a]I. Remec, Analysis of dosimetry from Charpy and dosimetry capsules removed from K2C in 2009 and March 30, 2010.
[b]K = Key, P = position in Key, C = nozzle corner.

Table 9. Neutron, gamma, and total (n+g) dpa rates for the surveillance capsules containing full size Charpy specimens removed from Key 2W in 2009
Specimens from several capsules were combined in metallurgic tests; for such groups of capsules the average values are given.

Capsule	Location in HFIR[a]	CVN material	dpa(n)/s	dpa(n, E < 0.414eV)/s	dpa(g)/s	dpa(n+g)/s
HB-1A-62	K2W, P6	A212B(LT)	3.654E-12	1.060E-13	1.845E-12	5.500E-12
HB-1A-65	K2W, P7	A212B(LT)	3.600E-12	1.044E-13	1.818E-12	5.419E-12
HB-1A-70	K2W, P8	A212B(LT)	3.591E-12	1.041E-13	1.813E-12	5.404E-12
Average			**3.615E-12± 6%**	**1.048E-13± 22%**	**1.826E-12± 8%**	**5.441E-12± 5%**
LS-1-1	K2W, P23	A212B(LT)	4.535E-12	1.315E-13	2.290E-12	6.825E-12
LS-1-2	K2W, P24	A212B(LT)	4.334E-12	1.257E-13	2.189E-12	6.523E-12
LS-1-3	K2W, P25	A212B(LT)	4.330E-12	1.256E-13	2.187E-12	6.517E-12
Average			**4.400E-12± 6%**	**1.276E-13± 22%**	**2.222E-12± 8%**	**6.622E-12± 5%**
NW-2-2	K2W, P1	Nozzle weld	4.427E-12	1.284E-13	2.236E-12	6.663E-12
NW-2-3	K2W, P2	Nozzle weld	4.521E-12	1.311E-13	2.283E-12	6.804E-12
Average			**4.474E-12± 6%**	**1.297E-13± 22%**	**2.260E-12± 8%**	**6.734E-12± 5%**

[a]K = Key, P = position in Key, W = nozzle weld.

Table 10. Neutron, gamma, and total (n+g) dpa rates for the surveillance capsules containing full size Charpy specimens removed from Key 6 in 2009

Capsule	Location in HFIR[a]	CVN material	dpa(n)/s		dpa(g)/s		dpa(n+g)/s	
SW-6-4	K6, P6	Seam weld/ Girth weld	2.63E-13	± 9 %	1.26E-12 (1.51E-12)[b]	± 50 %	1.52E-12 (1.77E-12)[c]	± 42 %
SW-6-5[d]	K6, P5	Seam weld/ Girth weld	2.69E-13	± 9 %	1.21E-12 (1.46E-12)	± 50 %	1.48E-12 (1.73E-12)	± 42 %
	K6, P7		2.38E-13	± 9 %	1.35E-12 (1.62E-12)	± 50 %	1.59E-12 (1.86E-12)	
SW-6-6	K6, P8	Seam weld/ Girth weld	2.12E-13	± 9 %	1.44E-12 (1.73E-12)	± 50 %	1.65E-12 (1.94E-12)	± 44 %
Average			**2.46E-13**		**1.32E-12 (1.58E-12)**		**1.56E-12 (1.83E-12)**	

[a]K = Key, P = position in Key.
[b]No experimental data from the dosimeters sensitive to gamma rays were available from Key 6. Therefore, the calculated values, which are given in parentheses, were scaled with M/C ratio of the gamma-induced dpa rate observed at Key 7, which is 0.832 (See Appendix D, Table D.14., Key 7 P5. Previously used scaling factor, given in Ref. 10, was 0.847).
[c]Values listed in parentheses were obtained with the calculated gamma dpa rate, which is listed in the column 6 in parentheses.
[d]Capsule SW-6-5 was irradiated in Key 6 in position 7 for the cycles 288 to 382 and in position 5 for the cycles 383 to 425B. Dpa rates listed for Key 6, position 7 were estimated as the averages of the values in Key 6, positions 6 and 8.

Table 11. Adjusted irradiation parameters for the surveillance capsules containing half-size Charpy specimens removed from Key 2C in 2009

Capsule and Position in the Capsule[a]	Location in HFIR[b]	CVN Material	dpa(n)/s	dpa(n, E < 0.414eV)/s	dpa(g)/s	dpa(n+g)/s
HB-2C-10-1	K2C, P14	A350LF3	1.96E-10	2.33E-11	1.17E-11	2.08E-10
HB-2C-10-2	K2C, P14	A350LF3	1.81E-10	2.16E-11	1.08E-11	1.92E-10
Average			**1.89E-10± 16**	**2.25E-11± 18**	**1.13E-11 ± 32**	**2.00E-10 ± 16**
HB-2C-11-1	K2C, P15	A350LF3	1.86E-10	2.21E-11	1.11E-11	1.97E-10
HB-2C-11-2	K2C, P15	A350LF3	1.74E-10	2.07E-11	1.04E-11	1.84E-10
Average			**1.80E-10± 16**	**2.14E-11± 18**	**1.07E-11 ± 32**	**1.90E-10 ± 16**

[a]Surveillance capsules with half-size Charpy specimens have two locations for dosimeter wires. These two locations are denoted by suffix -1 and -2 added to the capsule ID.
[b]K = Key, P = position in Key, C = nozzle corner.

Table 12. Calculated and adjusted irradiation parameters for the dosimetry-dedicated capsule DOS-10, irradiated at the Key 4, position 3[a]

Irradiation parameters	Calculated value ( )[b]	Std.[c] (%)	Adjusted value ( )[b]	Std.[c] (%)	Adj./Calc.	Ni58(N,P) M/C[d]
Neutron flux (E > 1.0 MeV)	4.46E+09	24	3.95E+09	7	0.89	0.94
Neutron flux (E > 0.5 MeV)	7.64E+09	24	6.73E+09	8	0.88	0.93
Neutron flux (E > 0.1 MeV)	1.28E+10	24	1.13E+10	9	0.88	0.93
Neutron flux (E < 0.414 eV)	5.53E+11	25	5.14E+11	4	0.93	
Neutron dpa/s (Fe, ASTM)	1.18E-11	18	1.06E-11	5	0.90	
Neutron dpa/s (Fe, ENDF-VI)	1.14E-11	18	1.03E-11	5	0.90	
Gamma dpa/s	3.41E-12	22	3.22E-12	7	0.94	
Gamma flux	1.19E+13	24	1.27E+13	15	1.07	
Neutron + gamma dpa/s	1.52E-11		1.39E-11	4	0.91	

[a]Dosimeters not used: 2 Cu, Ce-141, Co (undiluted) in Gd; chi-square per degree of freedom is 0.731.
[b]Units are $cm^{-2}s^{-1}$ for neutron and gamma-ray fluxes and s^{-1} for dpa/s.
[c]Percent standard deviation.
[d]The measured/calculated reaction rate ratios for Ni58(N,P) reaction are shown for reference.

Table 13. Calculated and adjusted irradiation parameters for the dosimetry-dedicated capsule DOS-11, irradiated at Key 4, position 8[a]

Irradiation parameters	Calculated value ( )[b]	Std.[c] (%)	Adjusted value ( )[b]	Std.[c] (%)	Adj./Calc.	Ni58(N,P) M/C[d]
Neutron flux (E > 1.0 MeV)	8.23E+09	43	6.66E+09	11	0.81	0.87
Neutron flux (E > 0.5 MeV)	1.25E+10	43	1.00E+10	13	0.80	0.92
Neutron flux (E > 0.1 MeV)	1.89E+10	43	1.50E+10	15	0.79	0.91
Neutron flux (E < 0.414 eV)	5.71E+11	45	6.25E+11	5	1.09	
Neutron dpa/s (Fe, ASTM)	1.73E-11	34	1.54E-11	7	0.89	
Neutron dpa/s (Fe, ENDF-VI)	1.68E-11	34	1.49E-11	7	0.89	
Gamma dpa/s	3.16E-12	40	3.60E-12	12	1.14	
Gamma flux	9.92E+12	42	1.31E+13	26	1.32	
Neutron + gamma dpa/s	2.04E-11		1.90E-11	6	0.93	

[a]Dosimeters not used: Ce-141; chi-square per degree of freedom is 1.007.
[b]Units are $cm^{-2}s^{-1}$ for neutron and gamma-ray fluxes and s^{-1} for dpa/s.
[c]Percent standard deviation.
[d]The measured/calculated reaction rate ratios for Ni58(N,P) reaction are shown for reference.

Table 14. Calculated and adjusted irradiation parameters for the dosimetry-dedicated capsule DOS-12, irradiated at the Key 4, position 10[a]

Irradiation parameters	Calculated value ( )[b]	Std.[c] (%)	Adjusted value ( )[b]	Std.[c] (%)	Adj./Calc.	Ni58(N,P) M/C[d]
Neutron flux (E > 1.0 MeV)	6.16E+09	29	4.65E+09	8	0.75	0.84
Neutron flux (E > 0.5 MeV)	9.99E+09	29	7.52E+09	9	0.75	0.82
Neutron flux (E > 0.1 MeV)	1.61E+10	29	1.20E+10	11	0.74	0.73
Neutron flux (E < 0.414 eV)	6.91E+11	30	5.71E+11	3	0.83	
Neutron dpa/s (Fe, ASTM)	1.54E-11	22	1.20E-11	5	0.78	
Neutron dpa/s (Fe, ENDF-VI)	1.49E-11	22	1.15E-11	5	0.77	
Gamma dpa/s	3.24E-12	27	2.96E-12	9	0.91	
Gamma flux	1.05E+13	28	9.85E+12	18	0.94	
Neutron + gamma dpa/s	1.87E-11		1.49E-11	4	0.80	

[a]Dosimeters not used: 1 Cu, Ce-141, 1 Fe-54; chi-square per degree of freedom is 0.987.
[b]Units are $cm^{-2}s^{-1}$ for neutron and gamma-ray fluxes and s^{-1} for dpa/s.
[c]Percent standard deviation.
[d]The measured/calculated reaction rate ratios for Ni58(N,P) reaction are shown for reference.

Table 15. Calculated and adjusted irradiation parameters for the dosimetry-dedicated capsule DOS-7, irradiated at the Key 2C, position 9[a]

Irradiation parameters	Calculated value ( )[b]	Std.[c] (%)	Adjusted value ( )[b]	Std.[c] (%)	Adj./Calc.	Ni58(N,P) M/C[d]
Neutron flux (E > 1.0 MeV)	6.95E+10	39	1.33E+11	11	1.92	2.03
Neutron flux (E > 0.5 MeV)	1.15E+11	39	2.19E+11	13	1.91	2.00
Neutron flux (E > 0.1 MeV)	1.90E+11	38	3.60E+11	15	1.89	1.78
Neutron flux (E < 0.414 eV)	3.06E+12	40	3.94E+12	12	1.29	
Neutron dpa/s (Fe, ASTM)	1.32E-10	32	2.33E-10	9	1.77	
Neutron dpa/s (Fe, ENDF-VI)	1.30E-10	32	2.31E-10	9	1.78	
Gamma dpa/s	8.66E-12	36	1.56E-11	25	1.80	
Gamma flux	1.65E+13	37	2.94E+13	31	1.78	
Neutron + gamma dpa/s	1.40E-10		2.49E-10	9	1.77	

[a]Dosimeters not used: all (5) Np, 2 Cu, Fe-58, Co-59 (undiluted) in Gd, one Fe-54; chi-square per degree of freedom is 1.036.
[b]Units are $cm^{-2}s^{-1}$ for neutron and gamma-ray fluxes and s^{-1} for dpa/s.
[c]Percent standard deviation.
[d]The measured/calculated reaction rate ratios for Ni58(N,P) reaction are shown for reference.

Table 16. Calculated and adjusted irradiation parameters for the dosimetry-dedicated capsule DOS-13, irradiated at the Key 2C, position 13[a]

Irradiation parameters	Calculated value ( )[b]	Std.[c] (%)	Adjusted value ( )[b]	Std.[c] (%)	Adj./Calc.	Ni58(N,P) M/C[d]
Neutron flux (E > 1.0 MeV)	6.95E+10	68	1.41E+11	18	2.03	1.86
Neutron flux (E > 0.5 MeV)	1.15E+11	68	2.32E+11	21	2.02	1.95
Neutron flux (E > 0.1 MeV)	1.90E+11	67	3.72E+11	24	1.96	1.75
Neutron flux (E < 0.414 eV)	3.06E+12	70	3.30E+12	5	1.08	
Neutron dpa/s (Fe, ASTM)	1.32E-10	55	2.29E-10	14	1.74	
Neutron dpa/s (Fe, ENDF-VI)	1.30E-10	56	2.26E-10	14	1.75	
Gamma dpa/s	8.66E-12	63	1.41E-11	29	1.63	
Gamma flux	1.65E+13	64	2.61E+13	45	1.58	
Neutron + gamma dpa/s	1.40E-10		2.43E-10	13	1.73	

[a]Dosimeters not used: all Np, 2 Cu; chi-square per degree of freedom is 0.993.
[b]Units are $cm^{-2}s^{-1}$ for neutron and gamma-ray fluxes and s^{-1} for dpa/s.
[c]Percent standard deviation.
[d]The measured/calculated reaction rate ratios for Ni58(N,P) reaction are shown for reference.

Table 17. Calculated and adjusted irradiation parameters for the dosimetry-dedicated tubular capsules HRB4-1G and HRB4-1A, irradiated at the Key 4, position D1[a]

Irradiation parameters	Calculated value ( )[b]	Std.[c] (%)	Adjusted value ( )[b]	Std.[c] (%)	Adj./Calc.	Ni58(N,P) M/C[d]
Neutron flux (E > 1.0 MeV)	5.67E+09	34	3.39E+09	9	0.60	0.65
Neutron flux (E > 0.5 MeV)	8.92E+09	34	5.29E+09	10	0.59	0.64
Neutron flux (E > 0.1 MeV)	1.42E+10	33	8.38E+09	12	0.59	
Neutron flux (E < 0.414 eV)	9.76E+11	35	7.02E+11	6	0.72	
Neutron dpa/s (Fe, ASTM)	1.71E-11	25	1.13E-11	5	0.66	
Neutron dpa/s (Fe, ENDF-VI)	1.63E-11	25	1.08E-11	5	0.66	
Gamma dpa/s	1.99E-12	31	2.36E-12	12	1.18	
Gamma flux	6.54E+12	33	8.59E+12	21	1.31	
Neutron + gamma dpa/s	1.91E-11		1.36E-11	5	0.72	

[a]Dosimeters not used: Ce-141, 1 Cu, 1 Co (undiluted) in Gd; chi-square per degree of freedom is 0.985.
[b]Units are $cm^{-2}s^{-1}$ for neutron and gamma-ray fluxes and s^{-1} for dpa/s.
[c]Percent standard deviation.
[d]The measured/calculated reaction rate ratios for Ni58(N,P) reaction are shown for reference.

Table 18. Calculated and adjusted irradiation parameters for the dosimetry-dedicated tubular capsules HRB4-2G and HRB4-2A, irradiated at the Key 4, position D2[a]

Irradiation parameters	Calculated value ( )[b]	Std.[c] (%)	Adjusted value ( )[b]	Std.[c] (%)	Adj./Calc.	Ni58(N,P) M/C[d]
Neutron flux (E > 1.0 MeV)	3.29E+09	49	2.20E+09	12	0.67	0.75
Neutron flux (E > 0.5 MeV)	5.46E+09	48	3.57E+09	14	0.65	0.74
Neutron flux (E > 0.1 MeV)	9.10E+09	48	5.92E+09	16	0.65	
Neutron flux (E < 0.414 eV)	9.72E+11	50	8.48E+11	7	0.87	
Neutron dpa/s (Fe, ASTM)	1.35E-11	38	1.07E-11	6	0.80	
Neutron dpa/s (Fe, ENDF-VI)	1.28E-11	37	1.01E-11	6	0.79	
Gamma dpa/s	1.43E-12	45	2.41E-12	11	1.69	
Gamma flux	6.54E+12	47	1.39E+13	28	2.12	
Neutron + gamma dpa/s	1.49E-11		1.31E-11	5	0.88	

[a]Dosimeters not used: 1 Np (Ce141), 1 Cu, 1 undiluted and 1 diluted Co in Gd, undiluted Co in Al, Fe-58; chi-square per degree of freedom is 1.078.
[b]Units are $cm^{-2}s^{-1}$ for neutron and gamma-ray fluxes and s^{-1} for dpa/s.
[c]Percent standard deviation.
[d]The measured/calculated reaction rate ratios for Ni58(N,P) reaction are shown for reference.

Table 19. Calculated and adjusted irradiation parameters for the dosimetry-dedicated tubular capsules HRB4-3G and HRB4-3A, irradiated at the Key 4, position D3[a]

Irradiation parameters	Calculated value ( )[b]	Std.[c] (%)	Adjusted value ( )[b]	Std.[c] (%)	Adj./Calc.	Ni58(N,P) M/C[d]
Neutron flux (E > 1.0 MeV)	2.56E+09	34	1.73E+09	9	0.68	0.68
Neutron flux (E > 0.5 MeV)	4.31E+09	34	2.93E+09	10	0.68	0.68
Neutron flux (E > 0.1 MeV)	7.26E+09	33	4.95E+09	12	0.68	
Neutron flux (E < 0.414 eV)	8.74E+11	35	5.30E+11	6	0.61	
Neutron dpa/s (Fe, ASTM)	1.15E-11	27	7.25E-12	5	0.63	
Neutron dpa/s (Fe, ENDF-VI)	1.09E-11	26	6.87E-12	5	0.63	
Gamma dpa/s	1.24E-12	31	1.61E-12	10	1.30	
Gamma flux	6.58E+12	33	8.31E+12	21	1.26	
Neutron + gamma dpa/s	1.27E-11		8.86E-12	4	0.70	

[a]Dosimeters not used: Ce-141, 1 Cu, Co (undiluted) in Gd; chi-square per degree of freedom is 0.854.
[b]Units are $cm^{-2}s^{-1}$ for neutron and gamma-ray fluxes and s^{-1} for dpa/s.
[c]Percent standard deviation.
[d]The measured/calculated reaction rate ratios for Ni58(N,P) reaction are shown for reference.

Table 20. Dosimeters from the dosimetry-dedicated capsules that were not used in the adjustment calculations

Location in HFIR[a]	Capsule ID and location within the capsule	Dosimeters not used in adjustment
K4, P3	DOS-10	2 Cu, Ce-141, Co (undiluted) in Gd
K4, P8	DOS-11	Ce-141
K4, P10	DOS-12	1 Cu, Ce-141, Fe-54
K2C, P9	DOS-7	2 Cu, all (5) Np, Fe-58, Co-59, Fe-54
K2C, P13	DOS-13	2 Cu, all (5) Np
K2C, P1	DOS-8[b]	2 Cu, all (4) Np, Co (undiluted) in Gd
K2C, P4	DOS-9[b]	2 Cu, all (4) Np
K4, D1	HRB4-1G, HRB4-1A	Ce-141, 1 Cu, 1 Co (undiluted) in Gd
K4, D2	HRB4-2G, HRB4-2A	Ce-141, 1 Cu, 1 undiluted and 1 diluted Co in Gd, undiluted Co in Al, Fe-58
K4, D3	HRB4-3G, HRB4-3A	Ce-141, 1 Cu, Co (undiluted) in Gd
K2W, P8	DOS1[b]	Ce-141
K2W, P5	DOS2[b]	3 Co-59 (undiluted), Ce-141

[a]K = Key, P = position in Key, D = tubular-type capsule.
[b]Analysis of this capsule is described in Appendix D.

Table 21. Dosimetry-dedicated capsules used to determine the irradiation parameters of the surveillance capsules via scaling

Surveillance capsules; irradiation locations[a]	Dosimetry-dedicated capsules; irradiation locations[a]
HB-2C-1; K2C,P5 HB-2C-2; K2C,P6 HB-2C-3; K2C,P7	DOS9; K2C, P4 DOS7; K2C, P9
HB-3-41; K2C, P3 HB-3-46; K2C, P4	DOS8; K2C, P1 DOS9; K2C, P4
HB-2C-10; K2C, P14 HB-2C-11; K2C, P15	DOS8; K2C, P1 DOS13; K2C, P13
HB-1A-62; K2W, P6 HB-1A-65; K2W, P7 HB-1A-70; K2W, P8	DOS1; K2W, P8 DOS2; K2W, P32
LS-1-1; K2W, P23 LS-1-2; K2W, P24 LS-1-3; K2W, P25	DOS1; K2W, P8 DOS2; K2W, P32
NW-2-2; K2W, P1 NW-2-3; K2W, P2	DOS1; K2W, P8 DOS2; K2W, P32
SW-6-4; K6, P6 SW-6-5; K6, P5 SW-6-6; K6, P8	No dosimetry-dedicated capsule was available from Key 6.

[a]K = Key, P = position in Key.

Table 22. Calculated and adjusted irradiation parameters for the surveillance capsule SW-6-4, irradiated in Key 6, position 6[a]

Irradiation parameters	Calculated value ( )[b]	Std.[c] (%)	Adjusted value ( )[b]	Std.[c] (%)	Adj./Calc.	Ni58(N,P) M/C[d]
Neutron flux (E > 1.0 MeV)	1.61E+08	52	1.67E+08	12	1.04	1.08
Neutron flux (E > 0.5 MeV)	1.97E+08	52	2.05E+08	14	1.04	
Neutron flux (E > 0.1 MeV)	2.44E+08	51	2.55E+08	16	1.05	
Neutron flux (E < 0.414 eV)	5.08E+08	55	7.53E+08	8	1.48	
Neutron dpa/s (Fe, ASTM)	2.52E-13	50	2.63E-13	9	1.04	
Neutron dpa/s (Fe, ENDF-VI)	2.46E-13	50	2.57E-13	9	1.04	
Gamma dpa/s	1.51E-12	50	1.51E-12	50	1.00	
Gamma flux	9.22E+12	53	9.22E+12	53	1.00	
Neutron + gamma dpa/s	1.76E-12		1.77E-12		1.01	

[a]Dosimeters not used: Fe-59; chi-square per degree of freedom is 8.427E-01.
[b]Units are $cm^{-2}s^{-1}$ for neutron and gamma-ray fluxes and s^{-1} for dpa/s.
[c]Percent standard deviation.
[d]The measured/calculated reaction rate ratios for Ni58(N,P) reaction are shown for reference.

Table 23. Uncertainties of the measured reaction rates (as used in the adjustment calculations)

Reaction	Uncertainty[a] (%)	Comments
NI58 (N,P) CO58	5	
FE54 (N,P) MN54	5	
CU63 (N,A) CO60	5	
NP237(N,F)	8	Np oxide encapsulated in vanadium.
BE (N/G,X) HE4	5	Be monitors encapsulated in stainless steel.
CO59 (N,G) CO60	7	
CO59 (N,G) CO60 (AL)	5	"Diluted" cobalt dosimeter in the form of Co/Al alloy with 0.116 wt% Co.[b]
CO59 (N,G) CO60 (GD)	8	Pure (undiluted) ^{59}Co dosimeter irradiated under 0.035-in. thick gadolinium cover.
CO59 (N,G) CO60 (GD,AL)	5	Diluted cobalt dosimeter in the form of Co/Al alloy with 0.116 wt % cobalt under 0.035-in. thick gadolinium cover.
FE58 (N,G) FE59	10	
FE58 (N,G) FE59	15	Iron dosimeter irradiated under 0.035-in. thick gadolinium cover.

[a]The 1-sigma uncertainty is given.
[b]In all previous analyses of HFIR dosimetry, the concentration of Co in Co/Al wires was taken to be 0.100 wt%, based on information in Ref. 11; however, during the present analysis, the original material specification certificate dating back to 1969 was revisited, and the Co content was found to be 0.116 wt % ± 0.002 (see Figs. A.5 and A.6).

5. RESULTS AND DISCUSSION

The best-estimate irradiation parameters for the dosimetry-dedicated capsules were obtained by performing least-squares adjustment of the calculated neutron and gamma fluxes and the measured responses of radiometric monitors and Be HAFMs. In this report, the terms "best estimate" and "adjusted" are used synonymously with regard to the irradiation parameters. All adjusted irradiation parameters represent the quantities averaged over the time of irradiation, which was two cycles (see Tables 1 and 2). The summary of the adjusted irradiation parameters for the dosimetry-dedicated capsules is given in Table 24.

Table 7 summarizes irradiation parameters for all HFIR dosimetry-dedicated capsules withdrawn before year 2008. The values from previous analyses are shown in parentheses. Dosimetry data from these capsules were reanalyzed, as discussed in Appendix D.

For most of the surveillance capsules containing Charpy specimens, the irradiation parameters were determined by scaling the irradiation parameters of the dosimetry-dedicated capsules irradiated at nearby positions. Best-estimate irradiation parameters for the surveillance capsules are given in Tables 8–11. No dosimetry-dedicated capsules were irradiated at Key 6; therefore, the spectrum adjustment procedure was used to determine the irradiation parameters for the surveillance capsules from Key 6. For material tests, Charpy specimens from several capsules were grouped to determine the shift in nil-ductility transition temperature (ΔNDTT). For each such group of capsules, the average irradiation parameters are given in Tables 8–11.

For each dosimeter set location, the calculated and the best-estimate irradiation parameters are provided. The irradiation parameters are the flux of neutrons with energies above 1 MeV, above 0.5 MeV, above 0.1 MeV, and below 0.41 eV; the neutron-induced displacement per atom (dpa) rate in iron calculated with ASTM dpa cross sections [dpa/s (Fe-ASTM)] and with iron dpa cross sections generated from ENDF-B-VI cross-section library [dpa/s (FE-ENDF-VI)]; the gamma-ray flux (gamma flux); the gamma-ray induced dpa in iron (gamma dpa/s); and the combined neutron- and gamma-induced dpa (neutron + gamma dpa/s), which is the sum of dpa/s (Fe-ASTM) and gamma-ray induced dpa/s.

The sum of neutron- and gamma-ray-induced dpa, dpa(n+γ), which is also referred to as "total dpa" in this document, is now used as the independent variable for the HFIR vessel materials embrittlement trend curve. The gamma-ray and thermal-neutron efficiency factors are not used; the discussion of this subject and the justification for using dpa(n+γ) is provided in ORNL/TM-2011/158 [30].

Tables 12–19 provide detailed information for each of the dosimetry capsules analyzed. The calculated irradiation parameters were obtained from radiation transport calculations. As discussed in Sect. 3, the standard deviations listed in Tables 12–19 for the calculated irradiation parameters merely reflect the uncertainties assumed for the calculated fluxes and do not necessarily represent the actual uncertainties of the calculations. The adjusted irradiation parameters are obtained from the calculated multigroup spectra and measured reaction rates via the spectrum adjustment procedure. The uncertainties of the adjusted irradiation parameters are also obtained via the adjustment procedure and represent a 1-σ standard deviation. The ratios of the adjusted-to-calculated irradiation parameters provide an estimate of the change due to adjustment; ratios greater than one indicate that the measured reaction rates were higher than the calculated values; therefore, adjustment resulted in adjusted values higher than the calculated values. Measured reaction rates lower than calculated result in adjusted values lower than calculated values and the adjusted/calculated ratios lower than 1.0. Finally, the ratios of the measured-to-calculated reaction rates for the Ni-58 (N,P) Co-58 reaction are given. In general, these ratios should be comparable to the ratios of adjusted-to-calculated neutron fast flux (E>1MeV) and neutron dpa rate.

Table 24. Summary of the adjusted irradiation parameters for the dosimetry-dedicated capsules removed from HFIR in 2008

Location in HFIR[a]	Capsule ID and location within the capsule	Neutron flux (E > 1 MeV)			Neutron dpa/s			Gamma dpa/s			(Neutron + gamma) dpa/s		
		Value ($cm^{-2}s^{-1}$)	±	Std.[b] (%)	Value (s^{-1})	±	Std.[b] (%)	Value (s^{-1})	±	Std.[b] (%)	Value (s^{-1})	±	Std.[b] (%)
K4; P3	DOS-10	3.95E+09	±	7	1.06E-11	±	5	3.22E-12	±	7	1.39E-11	±	4
K4; P8	DOS-11	6.66E+09	±	11	1.54E-11	±	7	3.60E-12	±	12	1.90E-11	±	6
K4; P10	DOS-12	4.65E+09	±	8	1.20E-11	±	5	2.96E-12	±	9	1.49E-11	±	4
K2C; P9	DOS-7	1.33E+11	±	11	2.33E-10	±	9	1.56E-11	±	25	2.49E-10	±	9
K2C; P13	DOS-13	1.41E+11	±	18	2.29E-10	±	14	1.41E-11	±	29	2.43E-10	±	13
K4; D1	HRB4-1G, HRB4-1A	3.39E+09	±	9	1.13E-11	±	5	2.36E-12	±	12	1.36E-11	±	5
K4; D2	HRB4-2G, HRB4-2A	2.20E+09	±	12	1.07E-11	±	6	2.41E-12	±	11	1.31E-11	±	5
K4; D3	HRB4-3G, HRB4-3A	1.73E+09	±	9	7.25E-12	±	5	1.61E-12	±	10	8.86E-12	±	4

Note: See Tables 12–19 for complete listing of the data summarized in this table.
[a]K = Key, P = position in Key, W = nozzle weld, C = nozzle corner, D = tubular-type dosimeters.
[b]Percent standard deviation.

In all previous analyses of HFIR dosimetry, the concentration of Co in Co/Al wires was taken to be 0.100 wt %, based on information in Ref. 11; however, during the present analysis, the original material specification certificate, dating back to 1969, was revisited and the Co content was found to be 0.116 wt % ± 0.002 (see Appendix A, Figures A.5 and A.6). For this reason, the analysis of dosimetry-dedicated capsules was repeated for DOS-1 and DOS-2 irradiated in Key 2W, and DOS-8 and DOS-9 irradiated in Key 2C, which were analyzed previously (Ref. 7). It was found that the change in cobalt content caused only a small effect on the irradiation parameters: the largest change was 3%, and in most cases, the changes were less than 1%. Another concern was that there is a 15-year span between the first transport calculations performed for the capsules withdrawn in 1993 and for the latest capsules withdrawn in 2008. The changes in the calculational methodology, cross sections, and HFIR models used in transport calculations could result in changes in calculated neutron and gamma fluxes and the adjusted dpa rates, thus potentially introducing inconsistencies in the database used for determination of the embrittlement trend curves for the HFIR materials. For these two reasons, it was decided to reevaluate all HFIR dosimetry-dedicated capsules withdrawn before 2008, which is shown in Appendix D, and all HFIR surveillance capsules, which is shown in Appendixes E and F. Table 7 summarizes irradiation parameters for all HFIR dosimetry-dedicated capsules withdrawn before 2008. The summary of all HFIR surveillance capsules through year 2009 is given in Table E.2 of Appendix E.

For the dosimetry-dedicated surveillance-type capsules DOS-10, DOS-11, and DOS-12, irradiated in Key 4, the adjusted irradiation parameters were ~10-25% lower than the calculated values and are consistent with ratios of the measured-to-calculated values for the Ni58 (N,P) Co58 reaction. The horizontal beam line HB-4 is tangential to the reactor core, which results in an asymmetric radiation field around the beam line. For this reason, there are considerable variations in irradiation parameters between the DOS-10, DOS-11, and DOS-12 dosimetry capsules. Higher irradiation parameters appear on the "shaded" side, that is in position 8, where DOS-11 was located; lower values are observed in position 3, where DOS-10 was located. The asymmetry is more pronounced in the neutron field than in the gamma-ray field. At the three positions considered, the maximum difference in the dpa rate is ~45% for neutrons and ~22% for gamma rays. Adjusted irradiation parameters for DOS-10, DOS-11, and DOS-12 are given in Tables 12–14.

The dosimetry-dedicated capsules DOS-7 and DOS-13 were irradiated in Key 2C. Capsules in Key 2C are positioned just outside the HB-2 beam line wall. At these locations, the calculations consistently and significantly underpredict the reaction rates, in particular those of the threshold reactions. In DOS-7 and DOS-13, the ratios of measured-to-calculated reaction rates for Ni-58(N,P) reaction ranged from 1.75 to 2.03. Similar, albeit somewhat smaller (~1.50), underestimation was observed in the previous round of experiments during cycles 400 and 401 when the capsules DOS-8 and DOS-9 were irradiated in Key 2C in positions 1 and 4, respectively (see Appendix D). Because the calculations significantly underestimated the measurement, the adjusted neutron and gamma dpa rates for DOS-7 and DOS-13 are ~75% higher than the calculated values. Additional difficulty in the determination of the adjusted irradiation parameters in the Key 2C positions is caused by significantly higher C/M ratios for Np-237 (N/G,F) reactions than the C/M ratios of the (N,P) reactions and Be (N/G,X) He reactions (see Table C.2). The C/M ratios of the Ni-58(N,P) and Fe-54(N,P) reactions show small spread, which indicates that the measurements are consistent; they also agree with the C/M for Be(N/G,X) reactions. The C/M ratios from the Np-237(N/G,F) reaction determined from different fission products also agree well and show little spread. So, the inspection of the measurements and C/M ratios does not help decide which dosimeters (if any) should be eliminated from the adjustment procedure. Several different adjustment runs were performed for each Key 2C location. At all locations in Key 2C, the adjusted irradiation parameters were lower when Np-237 measurements were included. For these reasons, the best estimate irradiation parameters reported for Key 2C locations were determined without Np-237 measurements. Adjusted irradiation parameters for DOS-7 and DOS-13 are given in Tables 15 and 16 and in Table D.7 and D.8 for DOS-8 and DOS-9.

The HB-2 beam tube and K2C/2W key were designed to be concentric and the original assembly inspection records [31] indicate that the HB-2 nozzle, the K2C/2W key, and the HB-2 beam tube were indeed "axisymmetric." However, significant differences in the measured reaction rates at presumably symmetric locations in K2C/2W were found in the first round of dosimetry measurements in K2C/2W [see Ref. 7] and observed again in the present analysis, which raised the possibility that the key may not be concentric with the beam tube. Key K2C/2W was visually inspected and an attempt was made to measure the specified nominal 0.5-in. annular gap between the outer surface of the beam tube and inner surface of K2C/2W [31]. These measurements indicated that K2C/2W was offset up and to the right, along a 45° line by ~ 0.25" [32]. Because of the overall importance of the HB-2 nozzle corner for the safe operation of the HFIR PV — the HB-2 nozzle corner contributes more than half of the calculated probability of the vessel failure [30] — a detailed analysis of all of the available measurements around K2C/2W was performed. It was determined that Key K2C/2W is offset by ~0.30" up and to the right at ~18° line to the vertical direction (see ORNL/TM-2011/158 [30]. The offset does not affect the validity of the adjusted neutron and gamma-ray dpa rates reported for the dosimetry-dedicated capsules and the surveillance capsules irradiated in K2C/2W because the measurements are obtained at the actual (offset) capsule locations and are propagated in the adjusted values via the adjustment procedure. However, because the calculated dpa rate values are for concentric positions, and the adjusted values are for the offset positions, the ratios of the Adj./Calc. dpa rate values are not meaningful for the normalization of the calculated values in the PV and are not provided in the summary tables (see Table E.1). Instead, the relevant normalization factors for K2C/2W that account for the key offset are determined in ORNL/TM-2011/158 [30].

The reaction rates of the dosimeters irradiated in the tubular capsules at Key 4, close to the nozzle corner, were mostly over-predicted by the calculations; therefore, the neutron and total dpa rates were adjusted downwards. However, in some cases, the Be(N/G,X) reaction was underpredicted and gamma-ray induced dpa rate was adjusted upwards (see Tables 17–19).

The complete list of measured reaction rates not used in the determination of the best-estimate irradiation parameters for the dosimetry-dedicated capsules withdrawn in 2008 is given in Table 20.

For the surveillance capsules, only a limited number of specific activities are measured. Therefore, the determination of irradiation parameters via spectrum adjustment has no advantage over simply scaling the irradiation parameters from the dosimetry-dedicated capsules irradiated at a nearby position with the average ratio of the reaction rates for the Ni-58 (N,P) Co-58 and Fe-54 (N,P) Mn-54 reaction from the surveillance capsule and the selected dosimetry-dedicated capsule. Table 21 identifies which dosimetry-dedicated capsules were used to determine the irradiation parameters of the surveillance capsules.

For all surveillance capsules irradiated in Key 2W, the irradiation parameters were scaled from the results for DOS1 and DOS2 (see Appendix D). The DOS1 and DOS2 reaction rates for the Ni-58 (N,P) Co-58 were taken from the middle location (position 2 within the capsule; see Fig. 2), while for the Fe-54 (N,P) Mn-54 reaction, which was not measured in position 2, the average of the reaction rates in position 1 and position 3 were used in the scaling.

Because no dosimetry-dedicated capsules were available from Key 6, the irradiation parameters for the surveillance capsules SW-6-4, SW-6-5, and SW-6-6 were determined by adjustment. The calculated and adjusted irradiation parameters are listed in Tables 22, 25, and 26. The calculations agreed with measured reaction rates of Ni-58 (N,P) Co-58 and Fe-54 (N,P) Mn-54 very well, typically within ~10%, so the adjustments were rather small. Thermal reaction rates Fe-58 (N,G) Fe-59 and Co-59 (N,G) Co-60 gave conflicting comparison with the calculations: the reaction on Fe-58 was 30–40% underpredicted while the reaction on Co-59 was ~30–80% overpredicted; for this reason, these measurements were not used in the adjustment. No reactions sensitive to gamma rays were measured in Key 6 locations; therefore, the

adjustment did not change the calculated gamma-ray fluxes and gamma dpa rate values. For the dpa rate, therefore, an estimated 50% uncertainty is reported, which may be important because the gamma-induced dpa is the dominant part of the total dpa rate in Key 6. If at a later time dosimetry-dedicated capsules will be irradiated in Key 6, it would be appropriate to update the surveillance capsules SW-6-4, SW-6-5, and SW-6-6 analysis presented here.

Table 25. Calculated and adjusted irradiation parameters for the surveillance capsule SW-6-5, irradiated in Key 6, position 5[a]

Irradiation parameters	Calculated value ( )[b]	Std.[c] (%)	Adjusted value ( )[b]	Std.[c] (%)	Adj./Calc.	Ni58(N,P) M/C[d]
Neutron flux (E > 1.0 MeV)	1.69E+08	52	1.73E+08	12	1.02	1.07
Neutron flux (E > 0.5 MeV)	2.09E+08	52	2.15E+08	14	1.03	
Neutron flux (E > 0.1 MeV)	2.62E+08	52	2.70E+08	16	1.03	
Neutron flux (E < 0.414 eV)	5.07E+08	55	6.96E+08	8	1.37	
Neutron dpa/s (Fe, ASTM)	2.62E-13	50	2.69E-13	9	1.03	
Neutron dpa/s (Fe, ENDF-VI)	2.56E-13	51	2.63E-13	9	1.03	
Gamma dpa/s	1.46E-12	50	1.46E-12	50	1.00	
Gamma flux	8.92E+12	53	8.92E+12	53	1.00	
Neutron + gamma dpa/s	1.72E-12		1.73E-12		1.00	

[a]Capsule SW-6-5 was irradiated in Key 6, position 5 during cycles 383-425B and in position 7 during cycles 288 to 382. The adjusted parameters given here are representative for the cycles 383-425B. Measured reaction rate not used: Fe-59; chi-square per degree of freedom is 8.404E-01.
[b]Units are $cm^{-2}s^{-1}$ for neutron and gamma-ray fluxes and s^{-1} for dpa/s.
[c]Percent standard deviation.
[d]The measured/calculated reaction rate ratios for Ni58(N,P) reaction are shown for reference.

Table 26. Calculated and adjusted irradiation parameters for the surveillance capsule SW-6-6, irradiated in Key 6, position 8[a]

Irradiation parameters	Calculated value ( )[b]	Std.[c] (%)	Adjusted value ( )[b]	Std.[c] (%)	Adj./Calc.	Ni58(N,P) M/C[d]
Neutron flux (E > 1.0 MeV)	1.24E+08	62	1.33E+08	13	1.08	1.12
Neutron flux (E > 0.5 MeV)	1.45E+08	61	1.57E+08	15	1.08	
Neutron flux (E > 0.1 MeV)	1.73E+08	61	1.88E+08	17	1.08	
Neutron flux (E < 0.414 eV)	3.45E+08	65	6.22E+08	8	1.80	
Neutron dpa/s (Fe, ASTM)	1.95E-13	60	2.12E-13	9	1.09	
Neutron dpa/s (Fe, ENDF-VI)	1.90E-13	60	2.07E-13	9	1.09	
Gamma dpa/s	1.73E-12	59	1.73E-12	59	1.00	
Gamma flux	9.64E+12	62	9.64E+12	62	1.00	
Neutron + gamma dpa/s	1.92E-12		1.94E-12		1.01	

[a]Measured reaction rate not used: Fe-59; chi-square per degree of freedom is 1.026.
[b]Units are $cm^{-2}s^{-1}$ for neutron and gamma-ray fluxes and s^{-1} for dpa/s.
[c]Percent standard deviation.
[d]The measured/calculated reaction rate ratios for Ni58(N,P) reaction are shown for reference.

6. CONCLUSIONS

This report describes the analysis of the dosimetry-dedicated capsules removed from HFIR in 2008 and the surveillance capsules removed in 2009, and provides best-estimate-irradiation parameters obtained with the analysis. All irradiation parameter rates, reaction rates, and neutron and gamma-ray fluxes given in this report are normalized to the reactor power of 85 MW, except where it is explicitly stated otherwise; the exceptions occur most frequently and consistently in Appendix E, where dpa values of the surveillance capsules are determined.

With the most up-to-date neutron and gamma fluxes obtained from transport calculations, a reevaluation of all dosimetry-dedicated capsules withdrawn before 2008 was performed. The intention was to eliminate potential differences arising from different transport calculations performed over a span of almost 20 years and to provide adjusted neutron and gamma dpa rates as consistently as possible.

All surveillance capsules withdrawn before 2008 were revisited, and the neutron and gamma dpa values were updated.

Therefore, this report provides the updated dpa rates in all dosimetry-dedicated capsules and the dpa values of all the surveillance capsules withdrawn from HFIR through the year 2009. These values should be used for the update of the HFIR PV surveillance program and the PV operating parameters, as well as for assessing the PV lifetime.

7. REFERENCE

1. J. R. McWherter, R. E. Schappel, and J. R. McGuffey, *HFIR Pressure Vessel and Structural Components Material Surveillance Program*, ORNL/TM-1372, Oak Ridge Natl. Lab., Oak Ridge, Tenn., January 1966.
2. R. D. Cheverton, J. G. Merkle, and R. K. Nanstad, *Evaluation of HFIR Pressure-Vessel Integrity Considering Radiation Embrittlement*, ORNL/TM-10444, Oak Ridge Natl. Lab., Oak Ridge, Tenn., April 1988.
3. I. Remec, J. A. Wang, F. B. K. Kam, and K. Farrell, "Effects of Gamma-Induced Displacements on HFIR Pressure Vessel Materials," *J. Nucl. Mat*. **217**, 258–268 (1994).
4. R. D. Cheverton and T. L. Dickson, *HFIR Vessel Life Extension with Enlarged HB-2 and HB-4 Beam Tubes*, ORNL/TM-13698, Oak Ridge Natl. Lab., Oak Ridge, Tenn., December 1998.
5. R. D. Cheverton, *An Evaluation of Life Extension of the HFIR Pressure Vessel*, ORNL/TM-12877, Oak Ridge Natl. Lab., Oak Ridge, Tenn., December 1994.
6. Cheverton et. al., *HFIR Pressure Vessel and Structural Components Materials Surveillance Program, Supplement 1*, ORNL/TM-1372/S1, October 1987, and R. D. Cheverton, et. al., *HFIR Pressure Vessel and Structural Components Materials Surveillance Program, Supplement 2*, ORNL/TM-1372/S2, Oak Ridge Natl. Lab., Oak Ridge, Tenn., August 1999.
7. I. Remec and C. A. Baldwin, *Analysis of HFIR Dosimetry Experiments Performed in Cycles 400 and 401*, ORNL/TM-2008/046, Oak Ridge Natl. Lab., Oak Ridge, Tenn., September 2008.
8. Letter, R. K. Nanstad (ORNL) to K. A. Smith (ORNL), Final Report-2005, "Charpy Impact Test Results for HFIR Surveillance Program," February 5, 2006.
9. Internal Memorandum, I. Remec and C. A. Baldwin, "Analysis of the Neutron Dosimetry Wires from the HFIR Pressure Vessel Surveillance Charpy Capsules Withdrawn in 2005," ORNL/HFIR/MEMO-2008/01, February 2, 2006.
10. R. D. Cheverton et al., Impact of 2004/2005 Dosimetry and Surveillance Data on the HFIR Vessel Radiation Embrittlement Trend Curve, Hydrostatic Proof Test Conditions, Pressure/Temperature Limits, and Life Extension, ORNL/TM-2008/007, Oak Ridge Natl. Lab., Oak Ridge, Tenn., August 2010.
11. C. A. Baldwin, *Assembly/Manufacturing and Installation Plan for HFIR Beam Tube Upgrade Pressure Vessel Surveillance Dosimetry* (Experiment Special Procedure, Document No. MET-FE-ESP-25), September 2000.
12. D. C. Glasgow, Summary Narrative of Radiation Measurements for the HB-4 and Limited HB-2 Dosimetry Experiments that support the HFIR Vessel Life Program, private communication from D. C. Glasgow (ORNL) to H. A. Kmieciak (ORNL), January 28, 2010.
13. B. M. Oliver, Helium Analyses of HFIR Beryllium Dosimeters, Work performed under PNNL Project 54499; private communication from Brian M. Oliver (Pacific Northwest National Laboratory) to H. A. Kmieciak (ORNL), July 27, 2009.
14. D. S. Glasgow, Summary Narrative of Radiation Measurements for Dosimetry Contained within Charpy Surveillance Capsules Removed from the HFIR Vessel December 2009 to Support the HFIR Vessel-Life Re-Evaluation per STP-4630, private communication from D. C. Glasgow (ORNL) to H. A. Kmieciak (ORNL), April 1, 2010.

15. ASTM Standard Guide for Application of Neutron Spectrum Adjustment Methods in Reactor Surveillance, E 944, *Annual Book of ASTM Standards*, Sect. 12, Vol. 12.02, "Nuclear, Solar, and Geothermal Energy."

16. I. Remec and F. B. K. Kam, *Neutron Spectra at Different High Flux Isotope Reactor (HFIR) Pressure Vessel Surveillance Locations*, NUREG/CR-6117, ORNL/TM-12484, Oak Ridge Natl. Lab., Oak Ridge, Tenn., December 1993.

17. I. Remec, *Simultaneous Neutron and Gamma Spectrum Adjustment, Proc. Ninth International Symposium on Reactor Dosimetry*, Prague, Czech Republic, September 1996, pp. 253–260 (1998).

18. E. D. Blakeman and R. D. Cheverton, *Neutron and Gamma Fluxes and dpa Rates for HFIR Vessel Beltline Region (Present and Upgrade Designs) Supplement 2*, ORNL/TM-13693/S2, Oak Ridge Natl. Lab., Oak Ridge, Tenn., August 2010.

19. Personal Communication, E. D. Blakeman (ORNL) to I. Remec (ORNL), October 14, 2010.

20. F. W. Stallmann, *LSL-M2: A Computer Program for Least Squares Logarithmic Adjustment of Neutron Spectra*, NUREG/CR-4349, ORNL/TM-9933, Oak Ridge Natl. Lab., Oak Ridge, Tenn., March 1986.

21. I. Remec, *An Update of the Dosimetry Cross-Section Data Base for the LSL-M2 Adjustment Code*, ORNL/TM-13409, Oak Ridge Natl. Lab., Oak Ridge, Tenn., October 2004.

22. V. V. Verbinski et al., *Nucl. Sci. and Eng*. **75**, 159–166 (1980).

23. S. I. Warshaw, "4 π Photoneutron Cross-Section for 9Be from Threshold to 16 MeV: Initial Evaluation," Physical Data Note PD-175, Lawrence Livermore National Laboratory, 1989.

24. E. P. Blizard et al., *Reactor Handbook*, Vol. III, Part B, "Shielding," p. 23.

25. R. E. Maerker et al., *Revision and Extension of the Data Base in the LEPRICON Dosimetry Methodology*, EPRI NP-3841, Electric Power Research Institute, Palo Alto, Calif., January 1985.

26. ASTM Standard Guide for Application of Neutron Transport Methods for Reactor Vessel Surveillance, E 482, *Annual Book of ASTM Standards*, Sect. 12, Vol. 12.02, "Nuclear, Solar, and Geothermal Energy."

27. *Annual Book of ASTM Standards*, Sect. 12, Vol. 12.02, "Nuclear, Solar, and Geothermal Energy."

28. R. D. Cheverton et al., *HFIR Pressure Vessel and Structural Components Materials Surveillance Program, Supplement 3,* ORNL-TM-1372/S3, August 2010.

29. R. D. Cheverton and R. K. Nanstad, *Evaluation of HFIR Vessel Surveillance Data and Hydro-Test Conditions,* ORNL/TM-12758, Oak Ridge Nat. Lab., Oak Ridge, Tenn., August 5, 1994.

30. R. D. Cheverton at al., *Impact of 2008/2009 Dosimetry and Surveillance Data on the HFIR Vessel Radiation Embrittlement Trend Curve, Hydrostatic Proof Test Conditions, Pressure/Temperature Limits, and Life Extension*, ORNL/TM-2011/158, Oak Ridge Nat. Lab., Oak Ridge, Tenn., December 2013.

31. HFIR Maintenance Work Package (MWP) 35010, Vol. 7.

32. H. Kmieciak's memo in preparation.

APPENDIX A

MEASURED SPECIFIC ACTIVITIES AND HELIUM CONCENTRATIONS FOR THE CAPSULES REMOVED IN 2008 AND 2009

Table A.1. Measured specific activities of the dosimeters irradiated during HFIR fuel cycles 415A, 415B, and 416

Dosimeter capsule	Reaction	Cover	Specific activity (Bq/mg)	Vial ID	Dosimeter material
DOS7-1					
	NI58 (N,P) CO58		3.10E+04	AL-13	NICKEL
	FE54 (N,P) MN54		5.60E+02	AL-13	IRON
	FE58 (N,G) FE59		6.43E+04		
	CU63 (N,A) CO60		1.06E+01	AL-13	COPPER
DOS7-2					
	NI58 (N,P) CO58	GD	3.00E+04	GD-07	NICKEL
	NP237(N,F) ZR95	GD	1.40E+04	GD-07	NP-237
	NP237(N,F) RU103	GD	1.89E+04		
	NP237(N,F) CS137	GD	1.24E+02		
	NP237(N,F) BA140	GD	2.99E+04		
	NP237(N,F) CE141	GD	1.50E+04		
	CO59 (N,G) CO60	GD	2.76E+05	GD-07	COBALT
DOS7-3					
	NI58 (N,P) CO58		2.70E+04	AL-14	NICKEL
	FE54 (N,P) MN54		4.73E+02	AL-14	IRON
	FE58 (N,G) FE59		4.82E+04		
	CU63 (N,A) CO60		9.17E+00	AL-14	COPPER
DOS13-1					
	NI58 (N,P) CO58		2.83E+04	AL-25	NICKEL
	FE54 (N,P) MN54		4.95E+02	AL-25	IRON
	FE58 (N,G) FE59		4.63E+04		
	CU63 (N,A) CO60		9.42E+00	AL-25	COPPER
	CO59 (N,G) CO60		1.38E+07	AL-25	COBALT
DOS13-2					
	NI58 (N,P) CO58	GD	2.93E+04	GD-13	NICKEL
	NP237(N,F) ZR95	GD	1.30E+04	GD-13	NP-237
	NP237(N,F) RU103	GD	1.76E+04		
	NP237(N,F) CS137	GD	1.13E+02		
	NP237(N,F) BA140	GD	2.78E+04		
	NP237(N,F) CE141	GD	1.45E+04		
	CO59 (N,G) CO60	GD	2.53E+05	GD-13	COBALT
DOS13-3					
	NI58 (N,P) CO58		2.67E+04	AL-26	NICKEL

Table A.1. Measured specific activities of the dosimeters irradiated during HFIR fuel cycles 415A, 415B, and 416 (continued)

Dosimeter capsule	Reaction	Cover	Specific activity (Bq/mg)	Vial ID	Dosimeter material
	FE54 (N,P) MN54		4.63E+02	AL-26	IRON
	FE58 (N,G) FE59		4.42E+04		
	CU63 (N,A) CO60		9.11E+00	AL-26	COPPER
	CO59 (N,G) CO60		1.29E+07	AL-26	COBALT
DOS10-1					
	NI58 (N,P) CO58		1.05E+03	AL-19	NICKEL
	FE54 (N,P) MN54		1.87E+01	AL-19	IRON
	FE58 (N,G) FE59		7.21E+03		
	CU63 (N,A) CO60		5.14E-01	AL-19	COPPER
	CO59 (N,G) CO60		2.16E+06	AL-19	COBALT
DOS10-2					
	NI58 (N,P) CO58	GD	1.02E+03	GD-10	NICKEL
	NP237(N,F) ZR95	GD	1.21E+03	GD-10	NP-237
	NP237(N,F) RU103	GD	1.50E+03		
	NP237(N,F) CS137	GD	1.00E+01		
	NP237(N,F) BA140	GD	2.52E+03		
	NP237(N,F) CE141	GD	1.34E+03		
	CO59 (N,G) CO60	GD	1.84E+04	GD-10	COBALT
DOS10-3					
	NI58 (N,P) CO58		1.05E+03	AL-20	NICKEL
	FE54 (N,P) MN54		1.79E+01	AL-20	IRON
	FE58 (N,G) FE59		6.93E+03		
	CU63 (N,A) CO60		5.30E-01	AL-20	COPPER
	CO59 (N,G) CO60		1.98E+06	AL-20	COBALT
DOS11-1					
	NI58 (N,P) CO58		2.53E+03	AL-21	NICKEL
	FE54 (N,P) MN54		4.46E+01	AL-21	IRON
	FE58 (N,G) FE59		8.38E+03		
	CU63 (N,A) CO60		1.27E+00	AL-21	COPPER
	CO59 (N,G) CO60		2.40E+06	AL-21	COBALT
DOS11-2					
	NI58 (N,P) CO58	GD	2.65E+03	GD-11	NICKEL
	NP237(N,F) ZR95	GD	1.55E+03	GD-11	NP-237
	NP237(N,F) RU103	GD	1.98E+03		

Table A.1. Measured specific activities of the dosimeters irradiated during HFIR fuel cycles 415A, 415B, and 416 (continued)

Dosimeter capsule	Reaction	Cover	Specific activity (Bq/mg)	Vial ID	Dosimeter material
	NP237(N,F) CS137	GD	1.35E+01		
	NP237(N,F) BA140	GD	3.28E+03		
	NP237(N,F) CE141	GD	1.70E+03		
	CO59 (N,G) CO60	GD	2.63E+04	GD-11	COBALT
DOS11-3					
	NI58 (N,P) CO58		2.66E+03	AL-22	NICKEL
	FE54 (N,P) MN54		4.66E+01	AL-22	IRON
	FE58 (N,G) FE59		8.69E+03		
	CU63 (N,A) CO60		1.32E+00	AL-22	COPPER
	CO59 (N,G) CO60		2.64E+06	AL-22	COBALT
DOS12-1					
	NI58 (N,P) CO58		1.48E+03	AL-23	NICKEL
	FE54 (N,P) MN54		2.63E+01	AL-23	IRON
	FE58 (N,G) FE59		8.31E+03		
	CU63 (N,A) CO60		7.86E-01	AL-23	COPPER
	CO59 (N,G) CO60		2.72E+06	AL-23	CO/AL
	CO59 (N,G) CO60		2.37E+06	AL-23	COBALT
DOS12-2					
	NI58 (N,P) CO58	GD	1.42E+03	GD-12	NICKEL
	NP237(N,F) ZR95	GD	1.28E+03	GD-12	NP-237
	NP237(N,F) RU103	GD	1.62E+03		
	NP237(N,F) CS137	GD	1.10E+01		
	NP237(N,F) BA140	GD	2.68E+03		
	NP237(N,F) CE141	GD	1.43E+03		
	CO59 (N,G) CO60	GD	4.21E+04	GD-12	CO/AL
	CO59 (N,G) CO60	GD	2.42E+04	GD-12	COBALT
DOS12-3					
	NI58 (N,P) CO58		1.30E+03	AL-24	NICKEL
	FE54 (N,P) MN54		2.17E+01	AL-24	IRON
	FE58 (N,G) FE59		7.92E+03		
	CU63 (N,A) CO60		5.75E-01	AL-24	COPPER
	CO59 (N,G) CO60		2.60E+06	AL-24	CO/AL
	CO59 (N,G) CO60		2.36E+06	AL-24	COBALT

Table A.1. Measured specific activities of the dosimeters irradiated during HFIR fuel cycles 415A, 415B, and 416 (continued)

Dosimeter capsule	Reaction	Cover	Specific activity (Bq/mg)	Vial ID	Dosimeter material
HRB4-1G					
	NI58 (N,P) CO58	GD	1.11E+03	GD-19	NICKEL
	NP237(N,F) ZR95	GD	8.40E+02	GD-19	NP-237
	NP237(N,F) RU103	GD	1.05E+03		
	NP237(N,F) CS137	GD	7.16E+00		
	NP237(N,F) BA140	GD	1.75E+03		
	NP237(N,F) CE141	GD	9.96E+02		
	CO59 (N,G) CO60	GD	1.45E+04	GD-19	COBALT
HRB4-2G					
	NI58 (N,P) CO58	GD	6.15E+02	GD-20	NICKEL
	NP237(N,F) ZR95	GD	6.36E+02	GD-20	NP-237
	NP237(N,F) RU103	GD	8.06E+02		
	NP237(N,F) CS137	GD	5.69E+00		
	NP237(N,F) BA140	GD	1.35E+03		
	NP237(N,F) CE141	GD	7.05E+02		
	CO59 (N,G) CO60	GD	3.43E+04	GD-20	CO/AL
	CO59 (N,G) CO60	GD	1.62E+04	GD-20	COBALT
HRB4-3G					
	NI58 (N,P) CO58	GD	3.97E+02	GD-21	NICKEL
	NP237(N,F) ZR95	GD	5.62E+02	GD-21	NP-237
	NP237(N,F) RU103	GD	7.06E+02		
	NP237(N,F) CS137	GD	4.80E+00		
	NP237(N,F) BA140	GD	1.18E+03		
	NP237(N,F) CE141	GD	6.70E+02		
	CO59 (N,G) CO60	GD	1.36E+04	GD-21	COBALT

Table A.2. Measured helium concentrations in HFIR beryllium specimens irradiated during cycles 415A, 415B, and 416

Dosimeter capsule	Vial ID	Mass[a] (mg)	Measured ^{4}He (10^{11} atoms)	Helium Concentration (appb)[b]	
				Measured	Mean and standard deviation[c]
DOS-7	GD-07	1.64 1.37 1.31	202.5 154.4 149.6	184.8 168.7 170.9	175 ± 9 (5%)
DOS-10	GD-10	1.53 1.38	18.72 16.17	18.31 17.54	17.9 ± 0.5 (3%)
DOS-11	GD-11	1.88 1.66 1.03	31.22 27.76 17.70	24.85 25.03 25.72	25.2 ± 0.5 (2%)
DOS-12	GD-12	1.47 1.69	16.95 20.33	17.26 18.00	17.6 ± 0.5 (2%)
DOS-13	GD-13	4.49 2.40 1.30 1.47	127.0 252.2 134.9 159.0	42.33[d] 157.3 155.3 161.9	158 ± 3 (2%)
HRB4-1G	GD-19	1.33 1.07	12.64 10.58	14.22 14.80	14.5 ± 0.4 (3%)
HRB4-2G	GD-20	1.74 1.95	14.69 15.82	12.63 12.14	12.4 ± 0.3 (2%)
HRB4-3G	GD-21	1.77 1.43	9.342 7.436	7.899 7.782	7.84 ± 0.08 (1%)

[a]Mass of specimen for analysis. Mass uncertainty is ±0.02 mg.
[b]Helium concentration in atomic parts per billion (10-9 atom fraction) with respect to the total number of atoms in the specimen. Uncertainty is estimated to be ±2%. Helium concentration is given by:

$$Concentration\ (appb) = \frac{(He, atoms) \times (1 \times 10^9)}{(6.682\ \times 10^{22})(mass, grams)}$$

[c]Mean and standard deviation (1σ) of replicate analyses.
[d]Suspected error in mass data; this measurement not included in the average.

Table A.3. Measured specific activities of the dosimeters irradiated during HFIR fuel cycles 417 and 418

Dosimeter capsule	Reaction	Cover	Specific activity (Bq/mg)	Vial ID	Dosimeter material
HRB4-1A					
	NI58 (N,P) CO58		1.18E+03	AL-32	NICKEL
	FE54 (N,P) MN54		2.20E+01	AL-32	IRON
	FE58 (N,G) FE59		9.52E+03		
	CU63 (N,A) CO60		7.64E-01	AL-32	COPPER
	CO59 (N,G) CO60		2.97E+06	AL-32	COBALT
HRB4-2A					
	NI58 (N,P) CO58		6.55E+02	AL-33	NICKEL
	FE54 (N,P) MN54		1.18E+01	AL-32	IRON
	FE58 (N,G) FE59		1.26E+04		
	CU63 (N,A) CO60		6.11E-01	AL-33	COPPER
	CO59 (N,G) CO60		4.27E+06	Al-33	CO/AL
	CO59 (N,G) CO60		5.09E+06	AL-33	COBALT
HRB4-3A					
	NI58 (N,P) CO58		4.11E+02	AL-34	NICKEL
	FE54 (N,P) MN54		7.12E+00	AL-34	IRON
	FE58 (N,G) FE59		7.20E+03		
	CU63 (N,A) CO60		3.32E-01	AL-34	COPPER
	CO59 (N,G) CO60		2.21E+06	AL-34	COBALT

Table A.4. Reactor power vs time for cycles 415A, 415B, and 416 (1.00 indicates 85 MW)

Month	Day	Year	Hour	Minute	Power	Cycle	Action
6	3	2008	21	35	0.10	415A	Startup
6	3	2008	21	52	0	415A	Shutdown
6	3	2008	22	41	0.10	415A	Startup
6	3	2008	23	39	0	415A	Shutdown
6	4	2008	0	19	0.10	415A	Startup
6	4	2008	0	43	0	415A	Shutdown
6	4	2008	1	18	0.10	415A	Startup
6	4	2008	1	55	0	415A	Shutdown
6	4	2008	2	46	0.10	415A	Startup
6	4	2008	3	25	0	415A	Shutdown
6	4	2008	5	16	0.10	415A	Startup
6	4	2008	5	44	0	415A	Shutdown
6	4	2008	6	24	0.10	415A	Startup
6	4	2008	7	17	0.26	415A	P-increase
6	4	2008	7	30	0.44	415A	P-increase
6	4	2008	7	35	0.72	415A	P-increase
6	4	2008	7	51	0.92	415A	P-increase
6	4	2008	7	55	1.00	415A	P-increase
6	21	2008	21	6	0	415A	Shutdown
6	24	2008	8	18	0.12	415B	Startup
6	24	2008	8	35	0.32	415B	P-increase
6	24	2008	8	39	0.51	415B	P-increase
6	24	2008	8	43	0.76	415B	P-increase
6	24	2008	8	46	0.91	415B	P-increase
6	24	2008	8	50	1.00	415B	P-increase
6	30	2008	5	25	0	415B	Shutdown
7	16	2008	8	2	0.10	416	Startup
7	16	2008	8	30	0	416	Shutdown
7	16	2008	9	12	0.10	416	Startup
7	16	2008	9	35	0	416	Shutdown
7	16	2008	10	12	0.10	416	Startup
7	16	2008	10	33	0	416	Shutdown
7	16	2008	11	7	0.10	416	Startup
7	16	2008	11	34	0.30	416	P-increase
7	16	2008	11	44	0.50	416	P-increase
7	16	2008	11	52	0.70	416	P-increase
7	16	2008	11	56	0.90	416	P-increase
7	16	2008	12	1	1.00	416	P-increase
8	6	2008	10	46	0	416	Shutdown

Table A.5. Reactor power vs time for cycles 417 and 418 (100% indicates 85 MW)

Month	Day	Year	Hour	Minute	Power	Cycle	Action
9	24	2008	7	46	0.10	417	Startup
9	24	2008	8	11	0	417	Shutdown
9	24	2008	10	8	0.10	417	Startup
9	24	2008	12	12	0.30	417	Power Increase
9	24	2008	12	20	0.47	417	Power Increase
9	24	2008	12	23	0.69	417	Power Increase
9	24	2008	12	27	0.87	417	Power Increase
9	24	2008	12	30	1.00	417	Power Increase
10	18	2008	6	50	0	417	Shutdown
11	12	2008	8	1	0.10	418	Startup
11	12	2008	8	11	0.30	418	Power Increase
11	12	2008	8	15	0.50	418	Power Increase
11	12	2008	8	19	0.70	418	Power Increase
11	12	2008	8	22	0.90	418	Power Increase
11	12	2008	8	26	1.00	418	Power Increase
12	5	2008	19	30	0	418	Shutdown

1967 WEDGE DOSIMETER
MAT'L used for TM-1372 SO CHARPY production.

FORM 555

McLOUTH STEEL CORPORATION
300 SOUTH LIVERNOIS DETROIT, 17, MICHIGAN

McLOUTH

D25548

02/18/65

CODE	ITEM	CUSTOMER PART NO.	DESCRIPTION	MILL ORDER NO.
30	C	1965	T304 2B SHEET	049744

SHIPPER DATE	SHIPPER NO.	CUSTOMER SPECIFICATIONS	CUSTOMER P. O. NO.	GAUGE	WIDTH	LENGTH
02/18/65	D25548	CONSIGNED	W6721CB	.0480	36	096

TYPE	FINISH	COMPOSITION	MATERIALS IN CONFORMANCE WITH:
			ASTM-A-240

TO: ATLANTIC STEEL COMPANY

P O BOX 1714
ATLANTA 1 GEORGIA

TO: Union Carbide Corporation
P.O. Box M.
Oak Ridge, Tenn.

PURCHASE ORDER # 7331650, Release 73X75

PIECES	GROSS WT.	TARE	NET WT.	HEAT NO.	C	MN	P	S	SI	CR	NI	MO	CU	SN	CO	CB	TI	
43	2214	161	2053	59937	.055	1.770	.026	.015	.540	18.750	9.510	.350	.200		.160			
43	2214	161	2053															

I HEREBY CERTIFY THAT ALL THE ANALYSIS FIGURES ARE CORRECT AS CONTAINED IN THE RECORDS OF THE COMPANY.

A.W. POLLOCK

STATE OF MICHIGAN COUNTY OF WAYNE
SUBSCRIBED AND SWORN TO BEFORE ME
19TH DAY OF FEB 19 65
DANIEL NABOYCHIK NOTARY PUBLIC
MY COMM. EXPIRES 10/16/67

HEAT NO	ROCKWELL	OLSEN	BEND	ELONG	TENSILE	YIELD	
59937	B 83-83	425-430	180	49	91,504	46,410	

Fig. A.1. Material specification sheet for wedge wire material SST 304 Heat 59937.

ORNL ANAL[illegible]CAL CHEMISTRY DIVISION
MASS AND OPTICAL SPECTROMETRY
BUILDING 9735 Y-12 TELEPHONE 4-2455 OR 4-2456

1988 DOSIMETRY WEDGE WIRE MAT'L for TM-1372 S1 CHARPY Production Hak 2-5-10

REQUEST AND REPORT OF ANALYSIS

REQUEST NO. 33542

SUBMITTED BY	BUILDING NO.	PHONE	DATE
G. A. BOWDEN	7910	44568	12-30-87

COMPOSITION OF SAMPLE OR ELEMENTS DESIRED	CHARGE NO.	SAMPLE NO.
304L SHEET. .062 THK. Ht.# 63366	A-2819E-AA	

☐ SSMS ☐ IOSSMS ☐ OPTICAL ☐ PASCHEN ☐ ICP

MATERIAL VERIFICATION

GENERAL (Values in _____)			LANTHANIDES and ACTINIDES (Values in _____)	METALS (Values in %)	
Ag	Ge	Pt	Ce	Type Alloy	
Al	Hf	Ra	Dy	Al	
As	Hg	Rb	Er	Bi	
Au	I	Re	Eu	Co	.04
B	In	Rh	Gd	Cr	18.2
Ba	Ir	Ru	Ho	Cu	.07
Be	K	S	La	Fe	MAJ'R
Bi	La	Sb	Lu	Mg	
Br	Li	Sc	Nd	Mn	1.60
C	Mg	Se	Pr	Mo	<.05
Ca	Mn	Si	Sm	Nb	<.0005
Cd	Mo	Sn	Tb	Ni	9.2
Cl	N	Sr	Y	Pb	
Co	Na	Ta	Yb	Si	.54
Cr	Nb	Tc	Tm	Sn	
Cs	Ni	Te		Ta	
Cu	O	Th	Am	Ti	
F	Os	Ti	Bk	V	
Fe	P	Tl	Cf	W	
Ga	Pa	U	Cm	Zn	
	Pb	V	Es	Zr	
	Pd	W	Fm	C	.0183
	Pm	Zn	Md	N	
	Po	Zr	No	O	
			Pu	P	.0162
				S	.0079

INCLUDE - C, P, S, Co, Nb } wet chemistry - 4500

Symbols used: M-Major, T-Trace, I-Interference, < - Less Than, > - Greater Than

DATA IN RED GIVEN BY TELECON 1/28/88 R.E. BRYANT, J.C. PRICE

☐ Semiquantitative - Precision ± 100 / − 50 %

☐ Quantitative - Precision ± ____ %

☒ Photoelectric - Precision ± 5 %

LOG NO. 6163

Analysis performed by	Approved By	Plate No.	Date Reported
EHW	W.H. Christie	7566-P	7-JAN-88

Comments:
FLUX WIRE MAT'L., P/N 3, DWG. E-49945, REV. B
44894 CALLED 1-21-88 about WET CHEM., EVERYTHING COMPLET
EXCEPT SULPHUR

UCN-1003 (3 2-79)

Fig. A.2. Material specification sheet for wedge wire material SST 304L Heat 63366.

Certificate of Analysis

10936

Material Iron Wire **Batch No.** W11020

In any reference to this material the above batch number should be quoted.

Batch Analysis

All concentrations are quoted in parts per million by weight. The symbol < indicates less than.

The techniques employed in the analysis of this particular batch are denoted below by symbols which refer to the techniques indicated on the accompanying sheet.

Elements sought

— other than matrix constituents.

Ag	silver	Cd	cadmium	Fe	iron	K	potassium	Nd	neodymium	Re	rhenium	Sr	strontium	V	vanadium
Al	aluminium	Ce	cerium	Ga	gallium	La	lanthanum	Ni	nickel	Rh	rhodium	Ta	tantalum	W	tungsten
As	arsenic	Co	cobalt	Gd	gadolinium	Li	lithium	Os	osmium	Ru	ruthenium	Tb	terbium	Y	yttrium
Au	gold	Cr	chromium	Ge	germanium	Lu	lutetium	P	phosphorus	Sb	antimony	Te	tellurium	Yb	ytterbium
B	boron	Cs	caesium	Hf	hafnium	Mg	magnesium	Pb	lead	Sc	scandium	Th	thorium	Zn	zinc
Ba	barium	Cu	copper	Hg	mercury	Mn	manganese	Pd	palladium	Se	selenium	Ti	titanium	Zr	zirconium
Be	beryllium	Dy	dysprosium	Ho	holmium	Mo	molybdenum	Pr	praseodymium	Si	silicon	Tl	thallium		
Bi	bismuth	Er	erbium	In	indium	Na	sodium	Pt	platinum	Sm	samarium	Tm	thulium		
Ca	calcium	Eu	europium	Ir	iridium	Nb	niobium	Rb	rubidium	Sn	tin	U	uranium		

Below is a list of impurity elements commonly associated with this matrix. Against each of these elements is quoted the level of detection using the technique indicated.

Level of detection

— techniques (a to c) unless otherwise stated.

Al	1	Bi	2	Ca	1	Cu	1	Mg	<1	Ni	1	Na	1	V	1
Ba	1	B	5	Cr	<1	Pb	5	Mn	<1	Si	1	Sn	3	Zn	1(ii)
Be	<1	Cd	1	Co	3	Li	<1	Mo	2	Ag	<1	Tl	2		

Elements detected

Silicon		5
Nickel		3
Copper		1
Aluminium	)	
Chromium	)	
Calcium	)	each less than 1
Magnesium	)	
Silver	)	

Additional analyses

Anions

Tests are carried out to check for any anionic impurities likely to be present. Those detected are reported below.

Sample pretreatment

Prior to analysis all fabricated metals are etched in acid to remove any trace superficial contaminants.

Johnson Matthey Chemicals Limited

Orchard Road, Royston, Hertfordshire SG8 5HE, England
Telephone Royston (0763) 44161 Telex 817351

Approved by
Chief Analyst

Fig. A.3. Material specification sheet for dosimeter grade iron wire.

Materials
Analysis
Certificate

Defining Excellence in Thin Films.

MARTIN MARIETTA ENG SYSTEMS
PLANT X10

P.O. BOX 2004
OAK RIDGE TN 37831
USA
CUST P.O. :73X-BRD12
CUST PART NO.:

LOT NUMBER : K54-0284
MRC ORDER NO: 61994
MRC PART NO : 90-117G-NI000-1049
MATERIAL : NICKEL
DESCRIPTION :
TM
MARZ .020"DIA X 70'L WIRE

Methods of Analysis	Analyte	Results	Units
leco	*** O	4.00	ppm
leco	*** N	< 5.00	ppm
EMIS.ICP/DCP	Co	< 10.00	ppm
EMIS.ICP/DCP	Cr	< 10.00	ppm
EMIS.ICP/DCP	Cu	< 10.00	ppm
EMIS.ICP/DCP	Fe	< 10.00	ppm
EMIS.ICP/DCP	Mg	< 10.00	ppm
EMIS.ICP/DCP	Mn	< 10.00	ppm
EMIS.ICP/DCP	Si	20.00	ppm
EMIS.ICP/DCP	Ti	< 10.00	ppm
EMIS.ICP/DCP	V	< 10.00	ppm
EMIS.ICP/DCP	Zr	13.00	ppm

Material meets and/or exceeds the overall purity and/or composition requirements for your purchase order 73X-BRD12 .

Dimensional: This material meets Materials Research Corporation and/or applicable Customer Specifications.
Fabrication: HIGH PURITY MATERIAL, COLD FABRICATED TO SIZE

Packaging : UNDER CLEAN ROOM CONDITIONS.
Notes : MRC'S cumulative impurity total is based on metals only. ND<# represents a level of contamination at least 50% below the least quantifiably determinable concentration.
: Data represent results of ACTUAL analyses. Typical data (TYP<), when reported, are average values from database.

Date : 3/28/91 Lois Bossolt-Bowes

Department of Customer Satisfaction

LOIS BOSSOLT - BOWES

MATERIALS RESEARCH CORPORATION
Orangeburg, NY 10962 (914) 359-4200

Fig. A.4. Material specification sheet for dosimeter grade nickel wire.

U. S. Department of Commerce
Maurice H. Stans
Secretary

National Bureau of Standards
A. V. Astin, Director

THIS IS A PRELIMINARY ISSUE OF THE PRINTED CERTIFICATE WHICH WILL BE MAILED WITHIN 60 DAYS

Certificate

STANDARD REFERENCE MATERIAL 953

Neutron Density Monitor Wire[a]

(Cobalt in Aluminum)

The standard is provided as a reference source of a cobalt in aluminum alloy to serve as a neutron density monitor wire standard. Accurate determination of thermal neutron densities is essential for irradiation tests in order to obtain a basis for comparison of densities among reactors, to apply the data in the design of reactors, to understand the mechanisms of radiation damage and to use in neutron activation analysis.

SRM No.	Description	Cobalt, percent by weight
953	Neutron Density Wire (Co in Al)	0.116[b] ± 0.002[c]

[a]The neutron density monitor material is in the form of wire 0.5 mm in diameter and is available in one meter lengths, (approx. 0.6 g), or in multiples thereof (continuous length).

[b]The reported value is the average of the results of three analytical methods.

[c]The uncertainty limit reported is the sum of the following (in weight percent):

1. 0.0009, the estimated limit of the systematic error in the average;
2. 0.0010, the estimated limit of the inhomogeneity at the 95% confidence level, for samples ≥4 mg; and,
3. 0.0004, the estimated limit of the random error in the average at the 95% confidence level.

Fourteen 10-meter lengths of wire equally spaced over the entire lot of selected material were analyzed. The methods used, the weight, (w), of samples taken from each of the fourteen lengths, the standard deviation, (S_x), of a single meas-

Fig. A.5. Material specifications for Al/Co wire, Page 1.

urement due to imprecision of the analytical method, the number of determinations, (N), made by each method, and the average obtained, ($\bar{X}$), are given below.

Method	w (mg)	S_x	N	$\bar{X}$
1	50-60	0.0013	14	0.1161
2	4-5	0.0007, 0.0005*	5 sets of 6	.1158
3	20	0.0015	41	.1173

*(The standard deviation was 0.0007 within a set, and 0.0005 between sets)

The analytical methods used were:

Methods 1 and 2: Two variations of a spectrophotometric method using 2,3-quinoxalinedithiol (E. R. Deardorff and R. W. Burke).

Method 3: Activation analysis, nondestructive, relative to cobalt metal foil and cobalt metal powder (T. E. Gills and D. A. Becker).

The use of gamma-ray spectroscopy to measure the induced radioactivity of this material is recommended. Gross counting will result in systematic errors due to the presence of ^{24}Na (from the n,α reaction on ^{27}Al) and ^{198}Au (from the n,γ reaction on a small amount of gold impurity present, estimated at ∿5 ppm).

The overall direction and coordination of the technical measurements leading to certification were performed under the chairmanship of J. R. DeVoe.

The technical and support aspects involved in the preparation, certification and issuance of this Standard Reference Material was coordinated through the Office of Standard Reference Materials by R. E. Michaelis.

Washington, D. C. 20234
March 12, 1969

W. Wayne Meinke, Chief
Office of Standard Reference Materials

Fig. A.6. Material specifications for Al/Co wire, Page 2.

Table A.6. Measured specific activities of the wedge wires from surveillance capsules removed from Key 2C: HB-2C-1, HB-2C-2, HB-2C-3, HB-2C-10, HB-2C-11, HB-3-41, and HB-3-46

Capsule ID; irradiation location	Reaction	Specific activity (Bq/mg)	
		Measured	Average
HB-3-41; Key 2C, position 3			
	NI58 (N,P) CO58	3.3973E+03 3.4634E+03 3.5421E+03	3.4676E+03
	FE54 (N,P) MN54	1.3385E+03 1.4837E+03 1.4178E+03	1.4133E+03
	FE58 (N,G) FE59	3.9698E+04 4.2004E+04 3.9537E+04	4.0413E+04
	CO59 (N,G) CO60	2.9872E+05 3.1684E+05 3.0063E+05	3.0540E+06
HB3-46; Key 2C, position 4			
	NI58 (N,P) CO58	3.2727E+03 3.3647E+03 3.4466E+03	3.3613E+03
	FE54 (N,P) MN54	1.3156E+03 1.3673E+03 1.4011E+03	1.3613E+03
	FE58 (N,G) FE59	3.9851E+04 4.1970E+04 4.1073E+04	4.0964E+04
	CO59 (N,G) CO60	3.0119E+05 3.1430E+05 3.0626E+05	3.0725E+05
HB-2C-1; Key 2C, position 5			
	NI58 (N,P) CO58	3.94916E+04 4.01156E+04 4.03597E+04	3.9989E+04
	FE54 (N,P) MN54	2.08180E+03 2.11191E+03 2.14248E+03	2.1121E+03
	FE58 (N,G) FE59	6.06573E+04 6.33082E+04 6.25518E+04	6.2172E+04

Table A.6. Measured specific activities of the wedge wires from surveillance capsules removed from Key 2C: HB-2C-1, HB-2C-2, HB-2C-3, HB-2C-10, HB-2C-11, HB-3-41, and HB-3-46 (continued)

Capsule ID; irradiation location	Reaction	Specific activity (Bq/mg) Measured	Specific activity (Bq/mg) Average
HB-2C-2; Key 2C, position 6			
	NI58 (N,P) CO58	4.29136E+04 4.40490E+04 4.41724E+04	4.37117E+04
	FE54 (N,P) MN54	2.21527E+03 2.33672E+03 2.28883E+03	2.2803E+03
	FE58 (N,G) FE59	6.57068E+04 6.79235E+04 6.73901E+04	6.7007E+04
HB-2C-3; Key 2C, position 7			
	NI58 (N,P) CO58	4.79677E+04 4.69678E+04 4.60981E+04	4.70112E+04
	FE54 (N,P) MN54	2.46122E+03 2.50271E+03 2.49210E+03	2.4853E+03
	FE58 (N,G) FE59	6.96934E+04 7.12925E+04 7.18130E+04	7.0933E+04
HB-2C-10-1; Key 2C, position 14			
	NI58 (N,P) CO58	3.97157E+04 3.94255E+04 3.89263E+04	3.93559E+04
	FE54 (N,P) MN54	2.08254E+03 2.09788E+03 2.09097E+03	2.0905E+03
	FE58 (N,G) FE59	6.05245E+04 6.10643E+04 6.04258E+04	6.0672E+04
HB-2C-10-2; Key 2C, position 14			
	NI58 (N,P) CO58	3.56816E+04 3.65058E+04 3.57383E+04	3.59752E+04
	FE54 (N,P) MN54	1.95814E+03 1.98309E+03 1.93172E+03	1.9576E+03

Table A.6. Measured specific activities of the wedge wires from surveillance capsules removed from Key 2C: HB-2C-1, HB-2C-2, HB-2C-3, HB-2C-10, HB-2C-11, HB-3-41,and HB-3-46 (continued)

Capsule ID; irradiation location	Reaction	Specific activity (Bq/mg)	
		Measured	Average
	FE58 (N,G) FE59	5.18110E+04 5.31783E+04 5.21838E+04	5.2391E+04
HB2C11-1; Key 2C, position 15			
	NI58 (N,P) CO58	3.72765E+04 3.67378E+04 3.64090E+04	3.68078E+04
	FE54 (N,P) MN54	2.02237E+03 2.04990E+03 1.94400E+03	2.0054E+03
	FE58 (N,G) FE59	5.82044E+04 5.90915E+04 5.75390E+04	5.8278E+04
HB2C11-2; Key 2C, position 15			
	NI58 (N,P) CO58	3.47047E+04 3.46427E+04 3.38597E+04	3.44024E+04
	FE54 (N,P) MN54	1.90444E+03 1.88672E+03 1.83711E+03	1.8761E+03
	FE58 (N,G) FE59	4.90904E+04 4.99555E+04 4.92379E+04	4.9428E+04

Table A.7. Measured specific activities of the wedge wires from surveillance capsules removed from Key 2W

Capsule ID; irradiation location	Reaction	Specific activity (Bq/mg) Measured	Specific activity (Bq/mg) Average
HB-1A-62; Key 2W, position 6			
	FE54 (N,P) MN54	5.25E+01 5.49E+01 5.24E+01	5.33E+01
	NI58 (N,P) CO58	1.31E+02 1.35E+02 1.35E+02	1.33E+02
	FE58 (N,G) FE59	2.08E+02 2.02E+02 1.94E+02	2.01E+02
	CO59 (N,G) CO60	1.59E+03 1.60E+03 1.58E+03	1.59E+03
HB-1A-65; Key 2W, position 7			
	FE54 (N,P) MN54	5.13E+01 5.27E+01 5.45E+01	5.28E+01
	NI58 (N,P) CO58	1.28E+02 1.35E+02 1.29E+02	1.31E+02
	FE58 (N,G) FE59	1.97E+02 2.05E+02 2.08E+02	2.03E+02
	CO59 (N,G) CO60	1.60E+03 1.62E+03 1.60E+03	1.61E+03
HB-1A-70; Key 2W, position 8			
	FE54 (N,P) MN54	5.01E+01 5.41E+01 5.07E+01	5.17E+01
	NI58 (N,P) CO58	1.30E+02 1.35E+02 1.31E+02	1.32E+02
	FE58 (N,G) FE59	2.10E+02 2.15E+02 2.08E+02	2.11E+02
	CO59 (N,G) CO60	1.68E+03 1.67E+03 1.65E+03	1.66E+03

Table A.7. Measured specific activities of the wedge wires from surveillance capsules removed from Key 2W (continued)

Capsule ID; irradiation location	Reaction	Specific activity (Bq/mg) Measured	Specific activity (Bq/mg) Average
LS-1-1; Key 2W, position 23			
	FE54 (N,P) MN54	6.37E+01 6.51E+01 6.15E+01	6.35E+01
	NI58 (N,P) CO58	1.69E+02 1.75E+02 1.65E+02	1.70E+02
	FE58 (N,G) FE59	2.68E+02 2.73E+02 2.65E+02	2.69E+02
	CO59 (N,G) CO60	1.68E+03 1.73E+03 1.71E+03	1.71E+03
LS-1-2; Key 2W, position 24			
	FE54 (N,P) MN54	6.17E+01 6.17E+01 5.95E+01	6.10E+01
	NI58 (N,P) CO58	1.63E+02 1.66E+02 1.55E+02	1.61E+02
	FE58 (N,G) FE59	2.59E+02 2.63E+02 2.62E+02	2.61E+02
	CO59 (N,G) CO60	1.58E+03 1.62E+03 1.57E+03	1.59E+03
LS-1-3; Key 2W, position 25			
	FE54 (N,P) MN54	5.82E+01 6.25E+01 6.01E+01	6.03E+01
	NI58 (N,P) CO58	1.64E+02 1.62E+02 1.62E+02	1.63E+02
	FE58 (N,G) FE59	2.54E+02 2.48E+02 2.51E+02	2.51E+02
	CO59 (N,G) CO60	1.58E+03 1.58E+03 1.53E+03	1.57E+03

Table A.7. Measured specific activities of the wedge wires from surveillance capsules removed from Key 2W (continued)

Capsule ID; irradiation location	Reaction	Specific activity (Bq/mg) Measured	Average
NW-2-2; Key 2W, position 1			
	FE54 (N,P) MN54	6.14E+01 6.24E+01 6.14E+01	6.18E+01
	NI58 (N,P) CO58	1.65E+02 1.69E+02 1.65E+02	1.66E+02
	FE58 (N,G) FE59	1.89E+02 1.95E+02 1.95E+02	1.93E+02
	CO59 (N,G) CO60	1.18E+03 1.18E+03 1.15E+03	1.17E+03
NW-2-3; Key 2W, position 2			
	FE54 (N,P) MN54	6.69E+01 6.27E+01 5.98E+01	6.32E+01
	NI58 (N,P) CO58	1.78E+02 1.70E+02 1.60E+02	1.69E+02
	FE58 (N,G) FE59	2.18E+02 2.08E+02 1.98E+02	2.08E+02
	CO59 (N,G) CO60	1.27E+03 1.18E+03 1.18E+03	1.21E+03

Table A.8. Measured specific activities of the wedge wires from surveillance capsules removed from Key 6

Capsule ID; irradiation location	Reaction	Specific activity (Bq/mg) Measured	Specific activity (Bq/mg) Average
SW-6-4; Key 6 position 6			
	FE54 (N,P) MN54	6.20E+00 6.64E+00 6.32E+00	6.39E+00
	NI58 (N,P) CO58	1.56E+01 1.61E+01 1.56E+01	1.58E+01
	FE58 (N,G) FE59	4.01E+00 2.91E+00 3.58E+00	3.50E+00
	CO59 (N,G) CO60	2.30E+01 2.26E+01 2.28E+01	2.28E+01
SW-6-5; Key 6 position 5			
	FE54 (N,P) MN54	6.03E+00 6.43E+00 6.54E+00	6.33E+00
	NI58 (N,P) CO58	1.57E+01 1.58E+01 1.56E+01	1.57E+01
	FE58 (N,G) FE59	3.49E+00 3.51E+00 4.21E+00	3.74E+00
	CO59 (N,G) CO60	2.16E+01 2.09E+01 2.12E+01	2.12E+01
SW-6-6; Key 6 position 8			
	FE54 (N,P) MN54	5.70E+00 5.63E+00 5.28E+00	5.54E+00
	NI58 (N,P) CO58	1.39E+01 1.38E+01 1.34E+01	1.37E+01
	FE58 (N,G) FE59	2.65E+00 3.33E+00 2.98E+00	2.99E+00
	CO59 (N,G) CO60	1.88E+01 1.85E+01 1.86E+01	1.87E+01

Note: The wedge wire used to measure activities was steel SST 304L Heat 63366 wire, produced by Atlantic Steel Company. Figure A.2 shows the chemical analysis of the wire. Cobalt was present as an impurity, and its content was 0.04 wt%.

APPENDIX B

CALCULATED NEUTRON AND GAMMA FLUXES AND NEUTRON AND GAMMA-RAY DPA CROSS SECTIONS

Table B.1. Energy boundaries for 61 neutron groups used in transport calculations (eV)

1.4920E+07	1.2210E+07	1.0000E+07	8.1870E+06	6.7030E+06	5.4880E+06
4.4930E+06	3.6790E+06	3.0120E+06	2.4660E+06	2.3460E+06	2.2310E+06
2.0190E+06	1.6530E+06	1.3530E+06	1.1080E+06	9.0720E+05	7.4270E+05
6.0810E+05	5.2340E+05	4.9790E+05	3.8770E+05	3.0200E+05	2.9850E+05
2.9720E+05	2.9450E+05	2.7320E+05	2.2370E+05	1.8320E+05	1.5000E+05
1.2280E+05	8.6520E+04	5.6560E+04	5.2480E+04	3.4310E+04	2.8500E+04
2.7000E+04	2.6060E+04	2.4790E+04	2.3580E+04	1.5030E+04	9.1190E+03
5.5310E+03	3.7070E+03	3.0350E+03	2.6130E+03	2.2490E+03	2.0350E+03
1.2340E+03	7.4850E+02	4.5400E+02	2.7540E+02	1.6700E+02	1.0130E+02
4.7850E+01	2.2600E+01	1.0680E+01	5.0430E+00	2.3820E+00	1.1250E+00
4.1400E-01	1.00E-05				

Table B.2. Energy boundaries for 23 gamma-ray groups used in transport calculations (eV)

1.40E+07	1.00E+07	8.00E+06	7.50E+06	7.00E+06	6.00E+06
5.00E+06	4.00E+06	3.00E+06	2.50E+06	2.00E+06	1.50E+06
1.00E+06	7.00E+05	6.00E+05	5.10E+05	4.00E+05	3.00E+05
1.50E+05	1.00E+05	7.00E+04	4.50E+04	2.00E+04	1.00E+04

Table B.3.[a] Calculated neutron and gamma fluxes normalized to a reactor power of 85 MW at the Key 4, position 3 location (DOS-10); units are $cm^{-2}s^{-1}$

4.45E+06	1.66E+07	3.01E+07	5.93E+07	1.19E+08	1.80E+08	2.13E+08	2.83E+08	3.77E+08	1.30E+08
1.25E+08	2.49E+08	6.49E+08	7.57E+08	8.37E+08	8.12E+08	9.43E+08	1.01E+09	6.54E+08	2.10E+08
8.59E+08	1.01E+09	5.08E+07	1.79E+07	3.45E+07	2.28E+08	6.96E+08	5.95E+08	5.80E+08	6.19E+08
8.08E+08	1.05E+09	1.54E+08	8.40E+08	1.70E+08	4.33E+07	1.42E+08	2.92E+08	1.58E+08	8.45E+08
1.10E+09	9.76E+08	9.28E+08	5.18E+08	3.33E+08	2.63E+08	2.81E+08	1.40E+09	1.29E+09	1.42E+09
1.32E+09	1.64E+09	1.72E+09	2.77E+09	2.98E+09	3.19E+09	3.38E+09	3.61E+09	4.00E+09	6.07E+09
5.53E+11									
4.37E+07	5.34E+10	1.94E+11	3.49E+10	1.71E+11	1.57E+11	1.58E+11	4.18E+11	2.27E+11	6.47E+11
5.91E+11	7.08E+11	7.56E+11	3.33E+11	6.13E+11	6.77E+11	9.03E+11	3.29E+12	1.35E+12	5.03E+11
1.42E+11	3.35E+09	1.78E+07							

[a]Fluxes in Tables B.3–B.5 received via personal communication, E. D. Blakeman, ORNL, to I. Remec, ORNL, Oct. 4th, 2010.

Table B.4. Calculated neutron and gamma fluxes normalized to a reactor power of 85 MW at the Key 4, position 8 location (DOS-11); units are $cm^{-2}s^{-1}$

1.31E+07	4.78E+07	1.20E+08	2.25E+08	4.30E+08	5.46E+08	5.17E+08	5.47E+08	6.52E+08	2.36E+08
2.32E+08	4.49E+08	1.16E+09	1.21E+09	1.24E+09	1.15E+09	1.29E+09	1.34E+09	8.47E+08	2.70E+08
1.09E+09	1.27E+09	6.36E+07	2.24E+07	4.31E+07	2.85E+08	8.61E+08	7.32E+08	7.11E+08	7.51E+08
9.78E+08	1.26E+09	1.84E+08	1.00E+09	2.04E+08	5.13E+07	1.67E+08	3.40E+08	1.85E+08	9.90E+08
1.28E+09	1.13E+09	1.07E+09	5.92E+08	3.82E+08	3.02E+08	3.21E+08	1.59E+09	1.46E+09	1.61E+09
1.49E+09	1.84E+09	1.92E+09	3.07E+09	3.29E+09	3.50E+09	3.70E+09	3.93E+09	4.33E+09	6.56E+09
5.71E+11									
3.65E+07	5.58E+10	1.89E+11	3.50E+10	1.48E+11	1.39E+11	1.42E+11	3.62E+11	2.16E+11	5.56E+11
5.26E+11	6.65E+11	6.63E+11	2.97E+11	5.65E+11	5.88E+11	7.83E+11	2.61E+12	9.82E+11	3.24E+11
7.29E+10	1.86E+09	1.87E+07							

Table B.5. Calculated neutron and gamma fluxes normalized to a reactor power of 85 MW at the Key 4, position 10 location (DOS-12); units are $cm^{-2}s^{-1}$

6.15E+06	2.52E+07	4.87E+07	1.10E+08	2.20E+08	3.06E+08	3.40E+08	4.02E+08	5.18E+08	1.81E+08
1.73E+08	3.44E+08	8.88E+08	1.01E+09	1.06E+09	9.93E+08	1.15E+09	1.21E+09	7.77E+08	2.51E+08
1.02E+09	1.18E+09	5.81E+07	2.06E+07	3.97E+07	2.70E+08	8.11E+08	7.16E+08	6.93E+08	7.34E+08
9.83E+08	1.24E+09	1.85E+08	1.03E+09	2.48E+08	6.71E+07	1.72E+08	3.13E+08	1.73E+08	1.01E+09
1.31E+09	1.27E+09	1.16E+09	6.29E+08	4.19E+08	3.64E+08	3.52E+08	1.69E+09	1.61E+09	1.75E+09
1.80E+09	2.04E+09	2.13E+09	3.43E+09	3.69E+09	3.95E+09	4.21E+09	4.52E+09	5.03E+09	7.62E+09
6.91E+11									
3.49E+07	5.31E+10	1.81E+11	3.38E+10	1.67E+11	1.45E+11	1.58E+11	3.69E+11	2.07E+11	6.56E+11
5.40E+11	6.51E+11	6.83E+11	3.05E+11	5.88E+11	6.30E+11	8.30E+11	2.89E+12	1.08E+12	2.91E+11
4.77E+10	1.17E+09	2.08E+07							

Table B.6.[a] Calculated neutron and gamma fluxes normalized to a reactor power of 85 MW at Key 2C. These fluxes were used to analyze dosimetry-dedicated capsules DOS-7 (position 9), DOS-13 (position 13), DOS-8 (position 1), DOS-9 (position 4), and all surveillance capsules irradiated in Key 2C (HB-2C-1, -2, -3; HB-3-41, -46 and HB-2C-10, -11); units are $cm^{-2}s^{-1}$

2.31E+07	9.37E+07	2.64E+08	6.68E+08	1.40E+09	2.40E+09
3.32E+09	4.06E+09	5.15E+09	1.81E+09	1.87E+09	4.20E+09
1.15E+10	1.29E+10	1.32E+10	1.24E+10	1.39E+10	1.39E+10
8.89E+09	2.88E+09	1.23E+10	1.43E+10	6.99E+08	2.49E+08
4.84E+08	3.37E+09	9.91E+09	8.99E+09	8.50E+09	9.22E+09
1.23E+10	1.58E+10	2.37E+09	1.31E+10	3.67E+09	1.01E+09
2.31E+09	3.87E+09	2.09E+09	1.29E+10	1.63E+10	1.59E+10
1.43E+10	7.66E+09	5.20E+09	4.65E+09	4.32E+09	2.05E+10
1.99E+10	2.14E+10	2.20E+10	2.45E+10	2.54E+10	4.04E+10
4.31E+10	4.56E+10	4.79E+10	5.08E+10	5.57E+10	8.26E+10
3.06E+12					
2.04E+07	2.48E+11	6.30E+11	1.31E+11	2.90E+11	2.97E+11
4.60E+11	5.83E+11	3.64E+11	1.13E+12	6.85E+11	8.82E+11
9.16E+11	4.21E+11	1.08E+12	9.14E+11	1.28E+12	4.20E+12
1.56E+12	4.11E+11	4.71E+10	2.45E+09	9.65E+07	

[a]Fluxes in Tables B.6–B.7 received via personal communication, E. D. Blakeman, ORNL, to I. Remec, ORNL, Feb. 9, 2012.

`

Table B.7. Calculated neutron and gamma fluxes normalized to a reactor power of 85 MW at Key 2W, position 8 (DOS-1) and position 3 (DOS-2)[a] locations; units are $cm^{-2}s^{-1}$

DOS1-1 and DOS2-1									
3.86E+06	1.15E+07	2.48E+07	5.03E+07	8.78E+07	1.24E+08	1.27E+08	1.49E+08	2.00E+08	6.47E+07
6.33E+07	1.15E+08	2.62E+08	2.72E+08	2.83E+08	2.39E+08	2.76E+08	2.88E+08	1.92E+08	5.60E+07
2.09E+08	2.47E+08	1.32E+07	4.70E+06	9.11E+06	5.65E+07	1.64E+08	1.31E+08	1.35E+08	1.23E+08
1.82E+08	2.06E+08	3.08E+07	1.73E+08	4.18E+07	1.12E+07	2.55E+07	4.48E+07	2.62E+07	1.57E+08
1.85E+08	1.63E+08	1.39E+08	7.27E+07	4.87E+07	4.23E+07	3.84E+07	1.81E+08	1.68E+08	1.73E+08
1.62E+08	1.78E+08	1.79E+08	2.73E+08	2.78E+08	2.82E+08	2.85E+08	2.91E+08	3.09E+08	4.47E+08
1.33E+10									
2.82E+07	7.96E+09	1.03E+11	1.27E+10	1.30E+11	9.30E+10	1.70E+11	2.64E+11	1.80E+11	5.28E+11
4.11E+11	5.86E+11	5.48E+11	2.45E+11	4.44E+11	4.86E+11	6.38E+11	2.16E+12	8.73E+11	2.96E+11
6.99E+10	1.41E+09	8.13E+05							
DOS1-2 and DOS2-2									
4.17E+06	1.27E+07	2.79E+07	5.77E+07	1.02E+08	1.48E+08	1.54E+08	1.82E+08	2.45E+08	7.97E+07
7.85E+07	1.43E+08	3.32E+08	3.49E+08	3.66E+08	3.11E+08	3.60E+08	3.77E+08	2.52E+08	7.36E+07
2.75E+08	3.27E+08	1.76E+07	6.26E+06	1.21E+07	7.47E+07	2.18E+08	1.74E+08	1.79E+08	1.64E+08
2.42E+08	2.76E+08	4.11E+07	2.31E+08	5.56E+07	1.49E+07	3.40E+07	6.03E+07	3.53E+07	2.10E+08
2.48E+08	2.17E+08	1.86E+08	9.76E+07	6.54E+07	5.67E+07	5.14E+07	2.43E+08	2.26E+08	2.33E+08
2.18E+08	2.40E+08	2.42E+08	3.69E+08	3.76E+08	3.82E+08	3.87E+08	3.96E+08	4.21E+08	6.09E+08
1.79E+10									
2.92E+07	9.79E+09	1.09E+11	1.38E+10	1.34E+11	9.62E+10	1.76E+11	2.75E+11	1.88E+11	5.66E+11
4.35E+11	6.16E+11	5.71E+11	2.54E+11	4.63E+11	5.05E+11	6.63E+11	2.22E+12	8.96E+11	3.00E+11
7.15E+10	1.36E+09	8.77E+05							
DOS1-3 and DOS2-3									
4.76E+06	1.48E+07	3.34E+07	6.94E+07	1.23E+08	1.76E+08	1.85E+08	2.21E+08	2.97E+08	9.69E+07
9.59E+07	1.79E+08	4.21E+08	4.45E+08	4.70E+08	4.02E+08	4.66E+08	4.92E+08	3.27E+08	9.57E+07
3.57E+08	4.27E+08	2.29E+07	8.17E+06	1.58E+07	9.76E+07	2.84E+08	2.28E+08	2.35E+08	2.14E+08
3.18E+08	3.62E+08	5.41E+07	3.04E+08	7.26E+07	1.95E+07	4.46E+07	7.96E+07	4.66E+07	2.77E+08
3.27E+08	2.87E+08	2.45E+08	1.29E+08	8.63E+07	7.48E+07	6.79E+07	3.22E+08	2.99E+08	3.09E+08
2.88E+08	3.18E+08	3.21E+08	4.91E+08	5.01E+08	5.10E+08	5.17E+08	5.31E+08	5.65E+08	8.21E+08
2.39E+10									
2.94E+07	1.19E+10	1.15E+11	1.49E+10	1.38E+11	9.92E+10	1.81E+11	2.80E+11	1.91E+11	5.76E+11
4.36E+11	6.19E+11	5.79E+11	2.58E+11	4.75E+11	5.15E+11	6.74E+11	2.26E+12	9.08E+11	3.01E+11
6.88E+10	1.34E+09	1.13E+06							

[a]Calculated fluxes for DOS-1 and DOS-2 are from the latest radiation transport calculations (Ref. 18) and are updated from those used in the previous analysis of these two dosimetry capsules (Ref. 7). Fluxes are given for each of the three dosimeter locations inside a capsule. Fluxes received via personal communication, E. D. Blakeman, ORNL, to I. Remec, ORNL, Feb. 16, 2012.

Table B.8.[a] Calculated neutron and gamma fluxes normalized to a reactor power of 85 MW at Key 4, position D1 (HRB4-1G, -1A) location; units are $cm^{-2}s^{-1}$

6.80E+06	2.63E+07	6.32E+07	1.19E+08	2.39E+08	3.19E+08	3.28E+08	3.69E+08	4.53E+08	1.69E+08
1.56E+08	3.14E+08	8.22E+08	9.04E+08	9.15E+08	8.74E+08	9.95E+08	9.97E+08	6.53E+08	2.20E+08
8.73E+08	9.84E+08	4.55E+07	1.64E+07	3.33E+07	2.57E+08	7.07E+08	6.38E+08	5.51E+08	6.24E+08
8.14E+08	1.09E+09	1.75E+08	8.46E+08	4.08E+08	1.14E+08	1.03E+08	1.56E+08	1.23E+08	9.80E+08
1.14E+09	1.15E+09	9.95E+08	5.17E+08	3.83E+08	3.78E+08	2.77E+08	1.41E+09	1.46E+09	1.56E+09
1.63E+09	1.76E+09	1.85E+09	2.99E+09	3.24E+09	3.49E+09	3.74E+09	4.06E+09	4.63E+09	7.40E+09
9.76E+11									
2.53E+07	2.57E+10	1.19E+11	1.79E+10	9.66E+10	9.19E+10	1.07E+11	2.48E+11	1.52E+11	3.64E+11
3.31E+11	4.09E+11	3.92E+11	1.71E+11	3.08E+11	3.36E+11	4.43E+11	1.55E+12	7.80E+11	4.28E+11
1.60E+11	1.23E+10	4.54E+07							

[a]Fluxes in Tables B.8–B.10 received via personal communication, E. D. Blakeman, ORNL, to I. Remec, ORNL, Oct. 14,2010.

Table B.9.[a] Calculated neutron and gamma fluxes normalized to a reactor power of 85 MW at Key 4, position D2 (HRB4-2G, -2A) location; units are $cm^{-2}s^{-1}$

2.02E+06	8.42E+06	1.77E+07	4.33E+07	9.22E+07	1.44E+08	1.72E+08	2.16E+08	2.77E+08	1.01E+08
9.29E+07	1.86E+08	4.90E+08	5.63E+08	5.85E+08	5.66E+08	6.61E+08	6.65E+08	4.41E+08	1.51E+08
6.04E+08	6.77E+08	3.09E+07	1.13E+07	2.30E+07	1.82E+08	4.91E+08	4.48E+08	3.81E+08	4.38E+08
5.71E+08	7.77E+08	1.26E+08	5.96E+08	3.13E+08	8.89E+07	6.52E+07	9.55E+07	8.53E+07	7.08E+08
8.21E+08	8.33E+08	7.16E+08	3.70E+08	2.80E+08	2.82E+08	1.95E+08	1.01E+09	1.06E+09	1.13E+09
1.20E+09	1.28E+09	1.36E+09	2.20E+09	2.39E+09	2.58E+09	2.78E+09	3.04E+09	3.48E+09	5.64E+09
9.72E+11									
1.91E+07	1.58E+10	8.06E+10	1.13E+10	7.75E+10	6.71E+10	7.57E+10	1.80E+11	9.41E+10	3.31E+11
2.48E+11	2.93E+11	3.23E+11	1.42E+11	2.44E+11	3.04E+11	3.97E+11	1.52E+12	9.33E+11	6.82E+11
4.68E+11	5.53E+10	1.98E+08							

[a]Fluxes in Tables B.8–B.10 received via personal communication, E. D. Blakeman, ORNL, to I. Remec, ORNL, Oct. 14, 2010.

Table B.10.[a] Calculated neutron and gamma fluxes normalized to a reactor power of 85 MW at Key 4, position D3 (HRB4-3G, -3A) location; units are $cm^{-2}s^{-1}$

1.05E+06	3.85E+06	8.49E+06	2.17E+07	5.27E+07	9.65E+07	1.26E+08	1.69E+08	2.20E+08	7.90E+07
7.36E+07	1.48E+08	3.90E+08	4.51E+08	4.72E+08	4.57E+08	5.38E+08	5.35E+08	3.57E+08	1.23E+08
4.90E+08	5.46E+08	2.45E+07	8.96E+06	1.85E+07	1.49E+08	3.99E+08	3.67E+08	3.09E+08	3.53E+08
4.65E+08	6.30E+08	1.04E+08	4.87E+08	2.64E+08	7.49E+07	5.02E+07	7.19E+07	6.75E+07	5.85E+08
6.71E+08	6.88E+08	5.89E+08	3.03E+08	2.31E+08	2.35E+08	1.60E+08	8.31E+08	8.82E+08	9.38E+08
1.00E+09	1.06E+09	1.13E+09	1.83E+09	1.99E+09	2.15E+09	2.32E+09	2.54E+09	2.92E+09	4.75E+09
8.74E+11									
1.82E+07	1.19E+10	7.13E+10	9.30E+09	6.47E+10	5.98E+10	6.87E+10	1.61E+11	8.78E+10	2.79E+11
2.16E+11	2.68E+11	2.94E+11	1.33E+11	2.18E+11	2.82E+11	3.77E+11	1.49E+12	9.66E+11	7.98E+11
6.38E+11	8.38E+10	2.98E+08							

[a]Fluxes in Tables B.8–B.10 received via personal communication, E. D. Blakeman, ORNL, to I. Remec, ORNL, Oct. 14, 2010.

Table B.11. Calculated neutron and gamma fluxes normalized to a reactor power of 85 MW; used for analysis of the surveillance capsules irradiated in Key 2W (HB-1A-62, -65, -70; LS-1-1, -2, -3, and NW 2-2, -2-3); units are $cm^{-2}s^{-1}$

These fluxes were also used for analysis of dosimeters from the middle locations in DOS1 and DOS-2, see Table 7.

4.17E+06	1.27E+07	2.79E+07	5.77E+07	1.02E+08	1.48E+08	1.54E+08	1.82E+08	2.45E+08	7.97E+07
7.85E+07	1.43E+08	3.32E+08	3.49E+08	3.66E+08	3.11E+08	3.60E+08	3.77E+08	2.52E+08	7.36E+07
2.75E+08	3.27E+08	1.76E+07	6.26E+06	1.21E+07	7.47E+07	2.18E+08	1.74E+08	1.79E+08	1.64E+08
2.42E+08	2.76E+08	4.11E+07	2.31E+08	5.56E+07	1.49E+07	3.40E+07	6.03E+07	3.53E+07	2.10E+08
2.48E+08	2.17E+08	1.86E+08	9.76E+07	6.54E+07	5.67E+07	5.14E+07	2.43E+08	2.26E+08	2.33E+08
2.18E+08	2.40E+08	2.42E+08	3.69E+08	3.76E+08	3.82E+08	3.87E+08	3.96E+08	4.21E+08	6.09E+08
1.79E+07	0								
2.92E+07	9.79E+09	1.09E+11	1.38E+10	1.34E+11	9.62E+10	1.76E+11	2.75E+11	1.88E+11	5.66E+11
4.35E+11	6.16E+11	5.71E+11	2.54E+11	4.63E+11	5.05E+11	6.63E+11	2.22E+12	8.96E+11	3.00E+11
7.15E+10	1.36E+09	8.77E+05							

Table B.12.[a] Calculated neutron and gamma fluxes normalized to a reactor power of 85 MW; used for analysis of the surveillance capsule SW-6-4 irradiated in Key 6, position 6; units are $cm^{-2}s^{-1}$

1.26E+06	3.79E+06	6.20E+06	1.04E+07	1.61E+07	1.81E+07	1.44E+07	1.42E+07	1.64E+07	4.66E+06
4.31E+06	7.19E+06	1.36E+07	1.28E+07	1.24E+07	9.97E+06	1.14E+07	1.09E+07	7.13E+06	2.17E+06
8.47E+06	9.48E+06	4.45E+05	1.61E+05	3.26E+05	2.38E+06	6.06E+06	5.32E+06	5.02E+06	4.71E+06
7.16E+06	7.79E+06	1.27E+06	6.75E+06	2.67E+06	7.65E+05	5.58E+05	8.53E+05	7.86E+05	6.22E+06
6.76E+06	6.51E+06	5.16E+06	2.58E+06	1.91E+06	1.88E+06	1.28E+06	6.38E+06	6.28E+06	6.26E+06
6.23E+06	6.23E+06	6.22E+06	9.32E+06	9.31E+06	9.27E+06	9.23E+06	9.32E+06	9.83E+06	1.42E+07
5.08E+08									
3.82E+07	3.71E+08	7.24E+10	7.62E+09	9.84E+10	9.36E+10	6.91E+10	2.56E+11	1.42E+11	3.01E+11
3.59E+11	4.50E+11	4.50E+11	1.99E+11	3.00E+11	3.93E+11	5.13E+11	1.91E+12	1.23E+12	1.08E+12
1.11E+12	1.81E+11	6.69E+08							

[a]Fluxes in Tables B.12–B.14 received via personal communication, E. D. Blakeman, ORNL, to I. Remec, ORNL, Nov. 11, 2010.

Table B.13.[a] Calculated neutron and gamma fluxes normalized to a reactor power of 85 MW; used for analysis of the surveillance capsule SW-6-5 irradiated in Key 6, position 5; units are $cm^{-2}s^{-1}$

1.27E+06	3.75E+06	5.92E+06	1.02E+07	1.63E+07	1.84E+07	1.49E+07	1.47E+07	1.73E+07	4.93E+06
4.62E+06	7.66E+06	1.47E+07	1.41E+07	1.38E+07	1.13E+07	1.27E+07	1.25E+07	8.12E+06	2.45E+06
9.57E+06	1.09E+07	5.28E+05	1.90E+05	3.76E+05	2.63E+06	6.80E+06	5.87E+06	5.62E+06	5.33E+06
7.91E+06	8.70E+06	1.39E+06	7.40E+06	2.84E+06	8.17E+05	6.43E+05	1.03E+06	9.10E+05	6.74E+06
7.42E+06	7.10E+06	5.65E+06	2.85E+06	2.09E+06	2.05E+06	1.41E+06	7.01E+06	6.85E+06	6.82E+06
6.77E+06	6.80E+06	6.79E+06	1.02E+07	1.01E+07	1.01E+07	1.00E+07	1.01E+07	1.06E+07	1.53E+07
5.07E+08									
3.61E+07	5.54E+08	5.88E+10	7.85E+09	1.01E+11	8.94E+10	7.92E+10	2.50E+11	1.39E+11	3.13E+11
3.42E+11	4.48E+11	4.43E+11	1.94E+11	2.99E+11	3.85E+11	5.05E+11	1.87E+12	1.18E+12	1.02E+12
1.03E+12	1.64E+11	5.94E+08							

[a]Fluxes in Tables B.12–B.14 received via personal communication, E. D. Blakeman, ORNL, to I. Remec, ORNL, Nov. 11, 2010.

Table B.14.[a] Calculated neutron and gamma fluxes normalized to a reactor power of 85 MW; used for analysis of the surveillance capsule SW-6-6 irradiated in Key 6, position 8; units are $cm^{-2}s^{-1}$

1.17E+06	3.39E+06	5.49E+06	9.35E+06	1.38E+07	1.52E+07	1.14E+07	1.08E+07	1.22E+07	3.38E+06
3.12E+06	5.12E+06	9.39E+06	8.62E+06	7.83E+06	6.06E+06	7.04E+06	6.25E+06	4.21E+06	1.29E+06
5.06E+06	5.47E+06	2.46E+05	9.09E+04	1.92E+05	1.47E+06	3.65E+06	3.28E+06	3.04E+06	2.80E+06
4.38E+06	4.71E+06	7.81E+05	4.17E+06	1.70E+06	4.91E+05	3.35E+05	4.83E+05	4.55E+05	3.88E+06
4.15E+06	4.02E+06	3.17E+06	1.57E+06	1.16E+06	1.16E+06	7.77E+05	3.83E+06	3.83E+06	3.80E+06
3.80E+06	3.78E+06	3.74E+06	5.61E+06	5.59E+06	5.58E+06	5.52E+06	5.57E+06	5.92E+06	8.69E+06
3.45E+08									
4.50E+07	6.25E+08	8.28E+10	9.16E+09	1.10E+11	1.05E+11	9.17E+10	2.87E+11	1.58E+11	3.35E+11
3.97E+11	5.15E+11	5.13E+11	2.19E+11	3.09E+11	4.13E+11	5.17E+11	1.93E+12	1.21E+12	1.09E+12
1.16E+12	1.89E+11	7.05E+08							

[a]Fluxes in Tables B.12–B.14 received via personal communication, E. D. Blakeman, ORNL, to I. Remec, ORNL, Nov. 11, 2010.

Table B.15.[a] Calculated neutron and gamma fluxes normalized to a reactor power of 85 MW; used for analysis of the dosimetry capsules HRB2-1G,-1A irradiated in Key 2D, position 1C; and capsule HRB2-2G,-2A irradiated in Key 2D, position 2C; units are $cm^{-2}s^{-1}$

1.37E+07	5.55E+07	1.60E+08	3.88E+08	7.90E+08	1.30E+09
1.65E+09	2.01E+09	2.51E+09	8.65E+08	8.65E+08	1.76E+09
4.44E+09	4.86E+09	4.88E+09	4.25E+09	5.17E+09	5.08E+09
3.43E+09	1.09E+09	4.31E+09	5.05E+09	2.43E+08	8.82E+07
1.79E+08	1.33E+09	3.49E+09	3.18E+09	3.00E+09	2.94E+09
4.49E+09	5.16E+09	8.52E+08	4.61E+09	1.87E+09	5.45E+08
4.12E+08	6.40E+08	5.75E+08	4.56E+09	5.17E+09	5.17E+09
4.25E+09	2.18E+09	1.64E+09	1.63E+09	1.13E+09	5.76E+09
5.93E+09	6.20E+09	6.46E+09	6.78E+09	7.10E+09	1.13E+10
1.21E+10	1.29E+10	1.38E+10	1.49E+10	1.69E+10	2.63E+10
2.48E+07					
1.16E+07	5.13E+10	2.16E+11	2.84E+10	1.11E+11	1.07E+11
2.12E+11	2.63E+11	1.72E+11	7.95E+11	3.17E+11	4.45E+11
4.37E+11	2.00E+11	4.04E+11	4.40E+11	6.11E+11	2.25E+12
1.35E+12	9.94E+11	5.90E+11	8.12E+10	2.96E+08	

[a]Fluxes generated from E. D. Blakeman's calculations on March 23, 2012.

Table B.16.[a] Calculated neutron and gamma fluxes normalized to a reactor power of 85 MW; used for analysis of the dosimetry capsules HRB2-1G,-1A irradiated in Key 2D, position 1W; capsule HRB2-2G,-2A irradiated in Key 2D, position 2W; and capsule HRB2-3G,-3A, irradiated in Key 2D, position 3W; units are $cm^{-2}s^{-1}$

1.35E+06	3.96E+06	8.55E+06	1.73E+07	3.14E+07	4.90E+07
5.34E+07	6.53E+07	9.37E+07	3.12E+07	3.10E+07	5.67E+07
1.32E+08	1.44E+08	1.74E+08	1.75E+08	2.04E+08	2.72E+08
1.95E+08	5.59E+07	2.05E+08	2.90E+08	1.79E+07	6.38E+06
1.20E+07	6.68E+07	1.83E+08	1.43E+08	1.47E+08	1.44E+08
2.11E+08	2.43E+08	3.85E+07	2.02E+08	7.46E+07	2.13E+07
1.64E+07	3.39E+07	3.16E+07	1.90E+08	2.11E+08	1.96E+08
1.56E+08	7.92E+07	5.81E+07	5.63E+07	3.89E+07	1.98E+08
1.92E+08	1.92E+08	1.87E+08	1.89E+08	1.89E+08	2.86E+08
2.87E+08	2.87E+08	2.86E+08	2.87E+08	2.98E+08	4.23E+08
1.14E+07					
1.45E+07	8.54E+09	5.91E+10	8.88E+09	6.52E+10	5.03E+10
8.78E+10	1.30E+11	8.66E+10	2.24E+11	1.88E+11	2.61E+11
2.44E+11	1.11E+11	1.97E+11	2.33E+11	3.10E+11	1.09E+12
6.27E+11	4.69E+11	3.72E+11	5.61E+10	2.06E+08	

[a]Fluxes generated from E. D. Blakeman's calculations on March 23, 2012.

Table B.17.[a] Calculated neutron and gamma fluxes normalized to a reactor power of 85 MW; used for analysis of the dosimetry capsule DOS-3, irradiated in Key 3, position 3; units are $cm^{-2}s^{-1}$

9.50E+05	2.58E+06	7.08E+06	1.16E+07	3.10E+07	5.39E+07
5.31E+07	7.64E+07	1.11E+08	4.00E+07	4.13E+07	7.75E+07
2.07E+08	2.39E+08	2.61E+08	2.40E+08	2.87E+08	3.07E+08
2.03E+08	6.29E+07	2.45E+08	2.92E+08	1.46E+07	5.21E+06
1.03E+07	7.07E+07	2.00E+08	1.74E+08	1.70E+08	1.64E+08
2.46E+08	2.84E+08	4.49E+07	2.48E+08	7.66E+07	2.17E+07
3.81E+07	5.52E+07	3.22E+07	2.39E+08	2.74E+08	2.65E+08
2.19E+08	1.12E+08	8.04E+07	7.61E+07	6.19E+07	2.92E+08
2.93E+08	3.06E+08	3.11E+08	3.27E+08	3.43E+08	5.44E+08
5.84E+08	6.23E+08	6.63E+08	7.18E+08	8.05E+08	1.23E+09
3.09E+07	0				
1.78E+07	1.16E+10	5.34E+10	9.27E+09	5.42E+10	5.24E+10
4.79E+10	1.33E+11	7.32E+10	1.53E+11	1.78E+11	2.16E+11
2.18E+11	9.58E+10	1.86E+11	1.97E+11	2.56E+11	8.69E+11
3.38E+11	1.00E+11	1.90E+10	3.10E+08	1.06E+06	

[a]Fluxes generated from E. D. Blakeman's calculations on March 23, 2012.

Table B.18.[a] Calculated neutron and gamma fluxes normalized to a reactor power of 85 MW; used for analysis of the dosimetry capsule DOS-4, irradiated in Key 3, position 8; units are $cm^{-2}s^{-1}$

2.56E+06	6.62E+06	2.37E+07	3.10E+07	7.99E+07	1.19E+08
1.05E+08	1.41E+08	1.96E+08	7.12E+07	7.14E+07	1.33E+08
3.45E+08	3.95E+08	4.39E+08	4.01E+08	4.73E+08	5.16E+08
3.41E+08	1.05E+08	4.11E+08	4.95E+08	2.55E+07	9.12E+06
1.76E+07	1.15E+08	3.33E+08	2.86E+08	2.86E+08	2.74E+08
4.03E+08	4.72E+08	7.29E+07	4.03E+08	1.07E+08	2.92E+07
6.33E+07	1.02E+08	5.84E+07	3.86E+08	4.55E+08	4.17E+08
3.55E+08	1.86E+08	1.29E+08	1.16E+08	1.02E+08	4.87E+08
4.76E+08	5.03E+08	4.80E+08	5.37E+08	5.60E+08	8.91E+08
9.57E+08	1.02E+09	1.08E+09	1.14E+09	1.29E+09	1.93E+09
4.30E+10					
1.28E+07	1.69E+10	5.70E+10	1.14E+10	4.95E+10	4.90E+10
4.82E+10	1.16E+11	6.64E+10	1.53E+11	1.64E+11	2.14E+11
2.14E+11	9.85E+10	2.03E+11	2.10E+11	2.73E+11	8.58E+11
2.93E+11	6.83E+10	8.93E+09	1.51E+08	1.40E+06	

[a]Fluxes generated from E. D. Blakeman's calculations on March 23, 2012.

Table B.19.[a] Calculated neutron and gamma fluxes normalized to a reactor power of 85 MW; used for analysis of the dosimetry capsule DOS-5, irradiated in Key 3, position 10; units are $cm^{-2}s^{-1}$

1.72E+06	4.69E+06	1.41E+07	2.10E+07	5.13E+07	7.79E+07
7.35E+07	1.01E+08	1.43E+08	5.10E+07	5.26E+07	9.87E+07
2.62E+08	3.05E+08	3.38E+08	3.16E+08	3.74E+08	4.04E+08
2.70E+08	8.26E+07	3.26E+08	3.93E+08	2.02E+07	7.21E+06
1.40E+07	9.26E+07	2.67E+08	2.26E+08	2.27E+08	2.18E+08
3.24E+08	3.78E+08	5.83E+07	3.26E+08	8.64E+07	2.37E+07
5.09E+07	8.41E+07	4.70E+07	3.11E+08	3.62E+08	3.33E+08
2.82E+08	1.47E+08	1.02E+08	9.19E+07	8.10E+07	3.86E+08
3.77E+08	3.98E+08	3.80E+08	4.24E+08	4.41E+08	6.96E+08
7.43E+08	7.92E+08	8.40E+08	8.94E+08	9.89E+08	1.50E+09
3.26E+10					
1.55E+07	1.32E+10	4.99E+10	9.70E+09	5.92E+10	5.02E+10
4.96E+10	1.22E+11	6.60E+10	1.81E+11	1.80E+11	2.24E+11
2.29E+11	1.02E+11	2.03E+11	2.17E+11	2.83E+11	9.49E+11
3.70E+11	1.06E+11	2.00E+10	3.45E+08	1.12E+06	

[a]Fluxes generated from E. D. Blakeman's calculations on March 23, 2012.

Table B.20.[a] Calculated neutron and gamma fluxes normalized to a reactor power of 85 MW; used for analysis of the dosimetry capsule DOS-6, irradiated in Key 7, position 1; units are $cm^{-2}s^{-1}$

1.18E+06	3.48E+06	5.66E+06	9.56E+06	1.44E+07	1.59E+07
1.22E+07	1.16E+07	1.34E+07	3.75E+06	3.45E+06	5.69E+06
1.06E+07	9.89E+06	9.32E+06	7.38E+06	8.48E+06	7.76E+06
5.12E+06	1.56E+06	6.15E+06	6.71E+06	3.10E+05	1.13E+05
2.32E+05	1.74E+06	4.39E+06	3.89E+06	3.63E+06	3.37E+06
5.19E+06	5.61E+06	9.22E+05	4.93E+06	1.98E+06	5.67E+05
4.01E+05	5.92E+05	5.54E+05	4.56E+06	4.90E+06	4.75E+06
3.75E+06	1.86E+06	1.38E+06	1.38E+06	9.27E+05	4.59E+06
4.54E+06	4.52E+06	4.52E+06	4.49E+06	4.48E+06	6.71E+06
6.70E+06	6.67E+06	6.62E+06	6.68E+06	7.08E+06	1.03E+07
3.62E+08					
4.06E+07	4.19E+08	7.47E+10	8.10E+09	9.95E+10	9.95E+10
7.55E+10	2.75E+11	1.47E+11	3.20E+11	3.77E+11	4.79E+11
4.81E+11	2.09E+11	3.06E+11	4.01E+11	5.13E+11	1.90E+12
1.20E+12	1.04E+12	1.07E+12	1.72E+11	6.34E+08	

[a]Fluxes received via personal communication, E. D. Blakeman, ORNL, to I. Remec, ORNL, Feb. 16, 2012.

Table B.21.[a] Calculated neutron and gamma fluxes normalized to a reactor power of 85 MW; used for analysis of the dosimetry capsules DOS1-75, DOS2-75, DOS3-75, DOS4-G-75, DOS4-75, irradiated in Key 7, position 5; units are $cm^{-2}s^{-1}$

1.28E+06	4.08E+06	6.85E+06	1.20E+07	1.80E+07	2.14E+07
1.70E+07	1.64E+07	1.95E+07	5.47E+06	5.09E+06	8.46E+06
1.59E+07	1.51E+07	1.44E+07	1.14E+07	1.35E+07	1.26E+07
8.41E+06	2.58E+06	1.01E+07	1.12E+07	5.13E+05	1.87E+05
3.85E+05	2.92E+06	7.34E+06	6.54E+06	6.09E+06	5.67E+06
8.87E+06	9.55E+06	1.59E+06	8.49E+06	3.45E+06	9.94E+05
6.70E+05	9.60E+05	9.32E+05	7.92E+06	8.52E+06	8.28E+06
6.53E+06	3.24E+06	2.42E+06	2.42E+06	1.62E+06	8.05E+06
8.04E+06	7.98E+06	8.00E+06	7.97E+06	7.95E+06	1.20E+07
1.20E+07	1.20E+07	1.19E+07	1.21E+07	1.28E+07	1.88E+07
8.00E+08					
3.63E+07	8.87E+08	5.97E+10	6.94E+09	9.94E+10	8.16E+10
5.52E+10	2.33E+11	1.22E+11	3.03E+11	3.30E+11	4.26E+11
4.33E+11	1.89E+11	2.87E+11	3.81E+11	5.01E+11	1.90E+12
1.26E+12	1.15E+12	1.20E+12	2.02E+11	7.70E+08	

[a]Fluxes received via personal communication, E. D. Blakeman, ORNL, to I. Remec, ORNL, Feb. 16, 2012.

Table B.22.[a] Calculated neutron and gamma fluxes normalized to a reactor power of 85 MW; used for analysis of the dosimetry capsules DOS2-42 and DOS3-42, irradiated in Key 4, position 2; units are $cm^{-2}s^{-1}$

8.97E+05	2.91E+06	4.66E+06	8.76E+06	1.57E+07	2.18E+07
2.40E+07	3.08E+07	4.35E+07	1.49E+07	1.49E+07	2.93E+07
7.64E+07	9.01E+07	1.03E+08	9.79E+07	1.18E+08	1.29E+08
8.64E+07	2.66E+07	1.06E+08	1.28E+08	6.64E+06	2.37E+06
4.62E+06	3.06E+07	8.87E+07	7.55E+07	7.51E+07	7.31E+07
1.08E+08	1.29E+08	1.98E+07	1.10E+08	2.94E+07	8.37E+06
1.71E+07	2.98E+07	1.66E+07	1.08E+08	1.26E+08	1.16E+08
9.85E+07	5.20E+07	3.60E+07	3.25E+07	2.83E+07	1.37E+08
1.34E+08	1.43E+08	1.37E+08	1.54E+08	1.61E+08	2.58E+08
2.77E+08	2.98E+08	3.17E+08	3.43E+08	3.85E+08	5.92E+08
1.66E+10					
2.14E+07	8.21E+09	5.04E+10	8.45E+09	7.32E+10	5.86E+10
5.94E+10	1.56E+11	8.80E+10	2.13E+11	2.21E+11	2.73E+11
2.73E+11	1.21E+11	2.23E+11	2.48E+11	3.23E+11	1.12E+12
4.44E+11	1.36E+11	2.95E+10	5.81E+08	6.66E+05	

[a]Fluxes received via personal communication, E. D. Blakeman, ORNL, to I. Remec, ORNL, Feb. 16,2012.

Table B.23.[a] Calculated neutron and gamma fluxes normalized to a reactor power of 85 MW; used for analysis of the dosimetry capsules DOS2-410 and DOS3-410, irradiated in Key 4, position 10; units are $cm^{-2}s^{-1}$

1.32E+06	4.86E+06	8.39E+06	1.60E+07	2.87E+07	3.72E+07
3.94E+07	4.82E+07	6.60E+07	2.27E+07	2.29E+07	4.55E+07
1.21E+08	1.41E+08	1.63E+08	1.57E+08	1.86E+08	2.09E+08
1.39E+08	4.24E+07	1.69E+08	2.07E+08	1.07E+07	3.83E+06
7.39E+06	4.85E+07	1.41E+08	1.19E+08	1.20E+08	1.17E+08
1.73E+08	2.04E+08	3.14E+07	1.75E+08	4.58E+07	1.25E+07
2.78E+07	4.61E+07	2.58E+07	1.69E+08	1.99E+08	1.82E+08
1.56E+08	8.24E+07	5.66E+07	5.08E+07	4.51E+07	2.16E+08
2.11E+08	2.24E+08	2.14E+08	2.40E+08	2.51E+08	3.99E+08
4.29E+08	4.59E+08	4.90E+08	5.25E+08	5.83E+08	8.89E+08
1.89E+10					
1.49E+07	9.58E+09	4.22E+10	7.98E+09	5.37E+10	4.82E+10
4.46E+10	1.25E+11	6.76E+10	1.76E+11	1.89E+11	2.34E+11
2.46E+11	1.09E+11	2.06E+11	2.34E+11	3.00E+11	1.01E+12
3.94E+11	1.11E+11	2.21E+10	3.74E+08	6.98E+05	

[a]Fluxes received via personal communication, E. D. Blakeman, ORNL, to I. Remec, ORNL, Feb. 16, 2012.

Table B.24.[a] Calculated neutron and gamma fluxes normalized to a reactor power of 85 MW; used for analysis of the dosimetry capsules DOS2-29 and DOS3-29, irradiated in Key 2, position 9; units are $cm^{-2}s^{-1}$

2.10E+06	6.59E+06	1.55E+07	3.39E+07	6.52E+07	1.01E+08
1.16E+08	1.43E+08	1.92E+08	6.39E+07	6.44E+07	1.21E+08
2.83E+08	3.04E+08	3.28E+08	2.88E+08	3.25E+08	3.51E+08
2.31E+08	6.78E+07	2.58E+08	3.14E+08	1.75E+07	6.19E+06
1.17E+07	6.84E+07	2.08E+08	1.61E+08	1.72E+08	1.58E+08
2.31E+08	2.69E+08	3.89E+07	2.22E+08	4.47E+07	1.19E+07
3.16E+07	7.24E+07	4.24E+07	2.00E+08	2.44E+08	2.05E+08
1.82E+08	9.83E+07	6.36E+07	5.24E+07	5.09E+07	2.47E+08
2.21E+08	2.32E+08	2.12E+08	2.43E+08	2.46E+08	3.77E+08
3.86E+08	3.94E+08	4.01E+08	4.11E+08	4.38E+08	6.34E+08
1.50E+10					
1.89E+07	9.90E+09	5.80E+10	1.03E+10	8.07E+10	6.01E+10
9.95E+10	1.59E+11	1.08E+11	2.73E+11	2.36E+11	3.30E+11
3.06E+11	1.37E+11	2.60E+11	2.77E+11	3.62E+11	1.19E+12
4.86E+11	1.56E+11	3.45E+10	6.80E+08	6.53E+05	

[a]Fluxes received via personal communication, E. D. Blakeman, ORNL, to I. Remec, ORNL, Feb. 16, 2012.

Table B.25. Cross sections for neutron induced dpa (ASTM); units are cm^{-2}

2.67E-21	2.41E-21	2.19E-21	2.02E-21	1.86E-21	1.71E-21
1.53E-21	1.37E-21	1.27E-21	1.16E-21	1.04E-21	1.05E-21
8.62E-22	8.10E-22	5.88E-22	4.29E-22	4.66E-22	3.61E-22
2.75E-22	3.61E-22	4.01E-22	2.43E-22	1.64E-22	1.92E-22
1.92E-22	2.08E-22	1.77E-22	2.22E-22	1.39E-22	1.74E-22
1.11E-22	1.04E-22	7.93E-23	6.72E-23	2.11E-22	4.33E-22
6.08E-23	2.82E-23	3.81E-24	7.60E-24	1.22E-23	2.29E-23
6.69E-24	4.84E-24	4.15E-24	3.66E-24	3.24E-24	2.37E-24
3.01E-24	2.04E-25	9.23E-26	1.19E-25	1.52E-25	2.09E-25
3.04E-25	4.42E-25	6.43E-25	9.35E-25	1.36E-24	2.12E-24
8.48E-24					

Table B.26. Cross sections for gamma-ray induced dpa; units are cm^{-2}

7.60E-24	6.25E-24	4.68E-24	4.11E-24	3.33E-24	2.39E-24
1.59E-24	9.27E-25	5.28E-25	3.13E-25	1.46E-25	4.03E-26
4.33E-27	0.00E+00	0.00E+00	0.00E+00	0.00E+00	0.00E+00
0.00E+00	0.00E+00	0.00E+00	0.00E+00	0.00E+00	

APPENDIX C

COMPARISON OF MEASURED AND CALCULATED REACTION RATES FOR DOSIMETERS FROM DOSIMETRY-DEDICATED CAPSULES REMOVED IN 2008 AND WEDGE WIRES FROM SURVEILLANCE CAPSULES REMOVED IN 2009

Table C.1. Comparison of measured and calculated reaction rates for DOS and tubular-dosimeter capsules

Capsule and location/ reaction	Comment[a]	Reaction rate Calculated (C)	Reaction rate Measured (M)	C/M	M/C	M/C Corr.[b]	SS Corr. factor[c]
		(s^{-1})	(s^{-1})				
K4, P3 DOS-10							
NI58 (N,P) CO58		4.93E-16	4.61E-16	1.07	0.94		
FE54 (N,P) MN54		3.65E-16	3.20E-16	1.14	0.88		
FE58 (N,G) FE59		5.03E-13	5.36E-13	0.94	1.07		
CU63 (N,A) CO60		3.44E-18	4.96E-18	0.69	1.45		
CO59 (N,G) CO60		1.64E-11	1.34E-11	1.23	0.82	0.94	1.15
NI58 (N,P) CO58	GD	4.86E-16	4.50E-16	1.08	0.93		
BE (N/G,X) HE		4.59E-15	4.67E-15	0.98	1.02		
NP237(N,F) ZR95	GD	2.83E-14	2.39E-14	1.18	0.84		
NP237(N,F) RU103	GD	2.83E-14	2.21E-14	1.28	0.78		
NP237(N,F) CS137	GD	2.83E-14	2.29E-14	1.24	0.81		
NP237(N,F) BA140	GD	2.83E-14	2.36E-14	1.2	0.84		
NP237(N,F) CE141	GD	2.83E-14	1.86E-14	1.52	0.66		
CO59 (N,G) CO60	GD	3.90E-13	1.14E-13	3.42	0.29	0.56	1.91
NI58 (N,P) CO58		4.93E-16	4.61E-16	1.07	0.93		
FE54 (N,P) MN54		3.65E-16	3.06E-16	1.19	0.84		
FE58 (N,G) FE59		5.03E-13	5.15E-13	0.98	1.02		
CU63 (N,A) CO60		3.44E-18	5.12E-18	0.67	1.49		
CO59 (N,G) CO60		1.64E-11	1.23E-11	1.34	0.75	0.86	1.15
K4, P8 DOS-11							
NI58 (N,P) CO58		1.28E-15	1.11E-15	1.15	0.87		
FE54 (N,P) MN54		9.82E-16	7.62E-16	1.29	0.78		
FE58 (N,G) FE59		5.20E-13	6.24E-13	0.83	1.2		
CU63 (N,A) CO60		1.20E-17	1.23E-17	0.98	1.02		
CO59 (N,G) CO60		1.70E-11	1.48E-11	1.14	0.87	1.01	1.15
NI58 (N,P) CO58	GD	1.27E-15	1.17E-15	1.08	0.92		
BE (N/G,X) HE		6.21E-15	6.57E-15	0.95	1.06		
NP237(N,F) ZR95	GD	3.50E-14	3.07E-14	1.14	0.88		
NP237(N,F) RU103	GD	3.50E-14	2.92E-14	1.2	0.83		
NP237(N,F) CS137	GD	3.50E-14	3.08E-14	1.14	0.88		
NP237(N,F) BA140	GD	3.50E-14	3.08E-14	1.14	0.88		
NP237(N,F) CE141	GD	3.50E-14	2.36E-14	1.48	0.67		
CO59 (N,G) CO60	GD	4.22E-13	1.63E-13	2.6	0.39	0.74	1.91
NI58 (N,P) CO58		1.28E-15	1.17E-15	1.1	0.91		
FE54 (N,P) MN54		9.82E-16	7.96E-16	1.23	0.81		
FE58 (N,G) FE59		5.20E-13	6.46E-13	0.81	1.24		

Table C.1. Comparison of measured and calculated reaction rates for DOS and tubular-dosimeter capsules (continued)

Capsule and location/ reaction	Comment[a]	Reaction rate Calculated (C)	Reaction rate Measured (M)	C/M	M/C	M/C Corr.[b]	SS Corr. factor[c]
		(s^{-1})	(s^{-1})				
CU63 (N,A) CO60		1.20E-17	1.28E-17	0.94	1.06		
CO59 (N,G) CO60		1.70E-11	1.63E-11	1.04	0.96	1.11	1.15
K4, P10 DOS-12							
NI58 (N,P) CO58		7.79E-16	6.50E-16	1.2	0.84		
FE54 (N,P) MN54		5.84E-16	4.50E-16	1.3	0.77		
FE58 (N,G) FE59		6.29E-13	6.18E-13	1.02	0.98		
CU63 (N,A) CO60		5.83E-18	7.59E-18	0.77	1.3		
CO59 (N,G) CO60	AL	2.05E-11	1.68E-11	1.22	0.82		
CO59 (N,G) CO60		2.05E-11	1.47E-11	1.39	0.72	0.83	1.15
NI58 (N,P) CO58	GD	7.67E-16	6.25E-16	1.23	0.82		
BE (N/G,X) HE		5.11E-15	4.59E-15	1.11	0.9		
NP237(N,F) ZR95	GD	3.12E-14	2.52E-14	1.24	0.81		
NP237(N,F) RU103	GD	3.12E-14	2.39E-14	1.31	0.77		
NP237(N,F) CS137	GD	3.12E-14	2.52E-14	1.24	0.81		
NP237(N,F) BA140	GD	3.12E-14	2.51E-14	1.24	0.8		
NP237(N,F) CE141	GD	3.12E-14	1.99E-14	1.57	0.64		
CO59 (N,G) CO60	AL,GD	4.86E-13	2.61E-13	1.86	0.54		
CO59 (N,G) CO60	GD	4.86E-13	1.50E-13	3.25	0.31	0.59	1.91
NI58 (N,P) CO58		7.79E-16	5.72E-16	1.36	0.73		
FE54 (N,P) MN54		5.84E-16	3.71E-16	1.57	0.64		
FE58 (N,G) FE59		6.29E-13	5.89E-13	1.07	0.94		
CU63 (N,A) CO60		5.83E-18	5.55E-18	1.05	0.95		
CO59 (N,G) CO60	AL	2.05E-11	1.61E-11	1.28	0.78		
CO59 (N,G) CO60		2.05E-11	1.46E-11	1.4	0.71	0.82	1.15
K2C, P9 DOS-7							
NI58 (N,P) CO58		6.70E-15	1.36E-14	0.49	2.03		
FE54 (N,P) MN54		4.87E-15	9.57E-15	0.51	1.96		
FE58 (N,G) FE59		2.84E-12	4.78E-12	0.59	1.69		
CU63 (N,A) CO60		3.36E-17	1.02E-16	0.33	3.05		
NI58 (N,P) CO58	GD	6.60E-15	1.32E-14	0.5	2		
BE (N/G,X) HE		2.37E-14	4.56E-14	0.52	1.93		
NP237(N,F) ZR95	GD	2.24E-13	2.76E-13	0.81	1.23		
NP237(N,F) RU103	GD	2.24E-13	2.79E-13	0.8	1.24		
NP237(N,F) CS137	GD	2.24E-13	2.83E-13	0.79	1.26		
NP237(N,F) BA140	GD	2.24E-13	2.81E-13	0.8	1.25		

Table C.1. Comparison of measured and calculated reaction rates for DOS and tubular-dosimeter capsules (continued)

Capsule and location/ reaction	Comment[a]	Reaction rate Calculated (C)	Reaction rate Measured (M)	C/M	M/C	M/C Corr.[b]	SS Corr. factor[c]
		(s^{-1})	(s^{-1})				
NP237(N,F) CE141	GD	2.24E-13	2.09E-13	1.07	0.93		
CO59 (N,G) CO60	GD	4.49E-12	1.71E-12	2.63	0.38	0.73	1.91
NI58 (N,P) CO58		6.70E-15	1.19E-14	0.56	1.78		
FE54 (N,P) MN54		4.87E-15	8.08E-15	0.6	1.66		
FE58 (N,G) FE59		2.84E-12	3.58E-12	0.79	1.26		
CU63 (N,A) CO60		3.36E-17	8.85E-17	0.38	2.64		
K2C, P13 DOS-13							
NI58 (N,P) CO58		6.70E-15	1.25E-14	0.54	1.86		
FE54 (N,P) MN54		4.87E-15	8.46E-15	0.58	1.74		
FE58 (N,G) FE59		2.84E-12	3.44E-12	0.83	1.21		
CU63 (N,A) CO60		3.36E-17	9.09E-17	0.37	2.71		
CO59 (N,G) CO60		9.34E-11	8.53E-11	1.09	0.91	1.05	1.15
NI58 (N,P) CO58	GD	6.60E-15	1.29E-14	0.51	1.95		
BE (N/G,X) HE		2.37E-14	4.12E-14	0.58	1.74		
NP237(N,F) ZR95	GD	2.24E-13	2.57E-13	0.87	1.15		
NP237(N,F) RU103	GD	2.24E-13	2.59E-13	0.86	1.16		
NP237(N,F) CS137	GD	2.24E-13	2.59E-13	0.87	1.16		
NP237(N,F) BA140	GD	2.24E-13	2.61E-13	0.86	1.17		
NP237(N,F) CE141	GD	2.24E-13	2.01E-13	1.11	0.9		
CO59 (N,G) CO60	GD	4.49E-12	1.57E-12	2.87	0.35	0.67	1.91
NI58 (N,P) CO58		6.70E-15	1.18E-14	0.57	1.75		
FE54 (N,P) MN54		4.87E-15	7.92E-15	0.62	1.63		
FE58 (N,G) FE59		2.84E-12	3.29E-12	0.86	1.16		
CU63 (N,A) CO60		3.36E-17	8.80E-17	0.38	2.62		
CO59 (N,G) CO60		9.34E-11	8.01E-11	1.17	0.86	0.99	1.15
K2C, P1 DOS-8							
NI58 (N,P) CO58		6.70E-15	9.74E-15	0.69	1.45		
FE54 (N,P) MN54		4.87E-15	7.17E-15	0.68	1.47		
FE58 (N,G) FE59		2.84E-12	2.52E-12	1.13	0.89		
CU63 (N,A) CO60		3.36E-17	7.08E-17	0.47	2.11		
CO59 (N,G) CO60		9.34E-11	5.74E-11	1.63	0.61	0.70	1.15
NI58 (N,P) CO58	GD	6.60E-15	9.86E-15	0.67	1.49		
NP237(N,F) ZR95	GD	2.24E-13	2.25E-13	1.00	1.00		
NP237(N,F) CS137	GD	2.24E-13	2.42E-13	0.92	1.08		
NP237(N,F) CE141	GD	2.24E-13	1.66E-13	1.35	0.74		

Table C.1. Comparison of measured and calculated reaction rates for DOS and tubular-dosimeter capsules (continued)

Capsule and location/ reaction	Comment[a]	Reaction rate Calculated (C)	Reaction rate Measured (M)	C/M	M/C	M/C Corr.[b]	SS Corr. factor[c]
		(s^{-1})	(s^{-1})				
NP237(N,F) RU103	GD	2.24E-13	2.15E-13	1.04	0.96		
BE (N/G,X) HE		2.37E-14	3.26E-14	0.73	1.37		
CO59 (N,G) CO60	GD	4.49E-12	1.17E-12	3.85	0.26	0.50	1.91
NI58 (N,P) CO58		6.70E-15	9.74E-15	0.69	1.45		
FE54 (N,P) MN54		4.87E-15	7.31E-15	0.67	1.50		
FE58 (N,G) FE59		2.84E-12	2.58E-12	1.10	0.91		
CU63 (N,A) CO60		3.36E-17	7.44E-17	0.45	2.22		
CO59 (N,G) CO60		9.34E-11	5.79E-11	1.61	0.62	0.71	1.15
K2C, P4 DOS-9							
NI58 (N,P) CO58		6.70E-15	9.33E-15	0.72	1.39		
FE54 (N,P) MN54		4.87E-15	6.90E-15	0.71	1.42		
FE58 (N,G) FE59		2.84E-12	2.63E-12	1.08	0.93		
CU63 (N,A) CO60		3.36E-17	7.07E-17	0.48	2.10		
CO59 (N,G) CO60	AL	9.34E-11	7.27E-11	1.29	0.78		
CO59 (N,G) CO60		9.34E-11	6.01E-11	1.55	0.64	0.74	1.15
NI58 (N,P) CO58	GD	6.60E-15	9.91E-15	0.67	1.50		
NP237(N,F) ZR95	GD	2.24E-13	2.30E-13	0.98	1.03		
NP237(N,F) RU103	GD	2.24E-13	2.19E-13	1.02	0.98		
NP237(N,F) CS137	GD	2.24E-13	2.46E-13	0.91	1.10		
NP237(N,F) CE141	GD	2.24E-13	1.63E-13	1.37	0.73		
BE (N/G,X) HE		2.37E-14	3.38E-14	0.70	1.43		
CO59 (N,G) CO60	AL,GD	4.49E-12	2.18E-12	2.06	0.48		
CO59 (N,G) CO60	GD	4.49E-12	1.20E-12	3.75	0.27	0.52	1.91
NI58 (N,P) CO58		6.70E-15	9.91E-15	0.68	1.48		
FE54 (N,P) MN54		4.87E-15	7.23E-15	0.67	1.48		
FE58 (N,G) FE59		2.84E-12	2.79E-12	1.02	0.98		
CU63 (N,A) CO60		3.36E-17	7.05E-17	0.48	2.10		
CO59 (N,G) CO60	AL	9.34E-11	7.79E-11	1.20	0.83		
CO59 (N,G) CO60		9.34E-11	6.31E-11	1.48	0.68	0.78	1.15
K2W, P8 DOS-1							
NI58 (N,P) CO58		3.05E-16	3.16E-16	0.96			
FE54 (N,P) MN54		2.32E-16	2.29E-16	1.02			
FE58 (N,G) FE59		1.25E-14	1.02E-14	1.23			
CU63 (N,A) CO60		2.66E-18	2.87E-18	0.93			
CO59 (N,G) CO60		4.16E-13	2.67E-13	1.56	0.64	0.74	1.15

Table C.1. Comparison of measured and calculated reaction rates for DOS and tubular-dosimeter capsules (continued)

Capsule and location/ reaction	Comment[a]	Reaction rate Calculated (C)	Reaction rate Measured (M)	C/M	M/C	M/C Corr.[b]	SS Corr. factor[c]
		(s-1)	(s-1)				
NI58 (N,P) CO58	GD	3.58E-16	4.10E-16	0.87	1.14		
NP237(N,F) ZR95	GD	1.41E-14	1.58E-14	0.89	1.12		
NP237(N,F) RU103	GD	1.41E-14	1.34E-14	1.05	0.95		
NP237(N,F) CS137	GD	1.41E-14	1.27E-14	1.11	0.90		
NP237(N,F) CE141	GD	1.41E-14	1.77E-14	0.80	1.26		
BE (N/G,X) HE		3.25E-15	3.66E-15	0.89	1.13		
CO59 (N,G) CO60	GD	3.82E-14	1.46E-14	2.62	0.38	0.73	1.91
NI58 (N,G) CO58		4.39E-16	5.56E-16	0.79	1.27		
FE54 (N,P) MN54		3.33E-16	4.18E-16	0.80	1.26		
FE58 (N,G) FE59		2.25E-14	3.07E-14	0.73	1.36		
CU63 (N,A) CO60		3.61E-18	4.52E-18	0.80	1.25		
CO59 (N,G) CO60		7.47E-13	7.90E-13	0.95	1.06	1.22	1.15
K2W, P32 DOS-2							
NI58 (N,P) CO58		3.05E-16	3.35E-16	0.91	1.10		
FE54 (N,P) MN54		2.32E-16	2.50E-16	0.93	1.08		
FE58 (N,G) FE59		1.25E-14	9.07E-15	1.38	0.72		
CU63 (N,A) CO60		2.66E-18	3.17E-18	0.84	1.19		
CO59 (N,G) CO60	AL	4.16E-13	2.65E-13	1.57	0.64		
CO59 (N,G) CO60		4.16E-13	2.35E-13	1.77	0.56	0.65	1.15
NI58 (N,P) CO58	GD	3.58E-16	4.42E-16	0.81	1.23		
NP237(N,F) ZR95	GD	1.41E-14	1.37E-14	1.03	0.97		
NP237(N,F) RU103	GD	1.41E-14	1.17E-14	1.21	0.83		
NP237(N,F) CS137	GD	1.41E-14	1.30E-14	1.09	0.92		
NP237(N,F) CE141	GD	1.41E-14	1.70E-14	0.83	1.20		
BE (N/G,X) HE		3.25E-15	3.09E-15	1.05	0.95		
CO59 (N,G) CO60	AL,GD	3.82E-14	2.92E-14	1.31	0.76		
CO59 (N,G) CO60		3.82E-14	1.57E-14	2.44	0.41	0.78	1.91
NI58 (N,P) CO58		4.39E-16	5.89E-16	0.74	1.34		
FE54 (N,P) MN54		3.33E-16	4.38E-16	0.76	1.32		
FE58 (N,G) FE59		2.25E-14	2.45E-14	0.92	1.09		
CU63 (N,A) CO60		3.61E-18	4.69E-18	0.77	1.30		
CO59 (N,G) CO60	AL	7.47E-13	6.88E-13	1.09	0.92		
CO59 (N,G) CO60		7.47E-13	6.09E-13	1.23	0.81	0.94	1.15
K4, D1 HRB4-1G, -1A							
NI58 (N,P) CO58		7.79E-16	5.07E-16	1.54	0.65		

Table C.1. Comparison of measured and calculated reaction rates for DOS and tubular-dosimeter capsules (continued)

Capsule and location/ reaction	Comment[a]	Reaction rate Calculated (C)	Reaction rate Measured (M)	C/M	M/C	M/C Corr.[b]	SS Corr. factor[c]
		(s^{-1})	(s^{-1})				
FE54 (N,P) MN54		5.90E-16	3.57E-16	1.65	0.6		
FE58 (N,G) FE59		8.85E-13	6.98E-13	1.27	0.79		
CU63 (N,A) CO60		6.51E-18	6.94E-18	0.94	1.07		
CO59 (N,G) CO60		2.88E-11	1.73E-11	1.66	0.6	0.69	1.15
NI58 (N,P) CO58	GD	7.68E-16	4.89E-16	1.57	0.64		
BE (N/G,X) HE		3.89E-15	3.78E-15	1.03	0.97		
NP237(N,F) ZR95	GD	2.30E-14	1.66E-14	1.39	0.72		
NP237(N,F) RU103	GD	2.30E-14	1.55E-14	1.49	0.67		
NP237(N,F) CS137	GD	2.30E-14	1.63E-14	1.41	0.71		
NP237(N,F) BA140	GD	2.30E-14	1.64E-14	1.4	0.71		
NP237(N,F) CE141	GD	2.30E-14	1.39E-14	1.66	0.6		
CO59 (N,G) CO60	GD	5.16E-13	8.95E-14	5.77	0.17	0.33	1.91
K4, D2 HRB4-2G, -2A							
NI58 (N,P) CO58		3.73E-16	2.80E-16	1.33	0.75		
FE54 (N,P) MN54		2.77E-16	1.91E-16	1.45	0.69		
FE58 (N,G) FE59		8.80E-13	9.23E-13	0.95	1.05		
CU63 (N,A) CO60		2.27E-18	5.55E-18	0.41	2.44		
CO59 (N,G) CO60	AL	2.86E-11	2.49E-11	1.15	0.87		
CO59 (N,G) CO60		2.86E-11	2.96E-11	0.96	1.04	1.19	1.15
NI58 (N,P) CO58	GD	3.68E-16	2.71E-16	1.36	0.74		
BE (N,X)		2.38E-15	3.23E-15	0.74	1.36		
NP237(N,F) ZR95	GD	1.49E-14	1.26E-14	1.18	0.84		
NP237(N,F) RU103	GD	1.49E-14	1.19E-14	1.25	0.8		
NP237(N,F) CS137	GD	1.49E-14	1.30E-14	1.15	0.87		
NP237(N,F) BA140	GD	1.49E-14	1.26E-14	1.18	0.85		
NP237(N,F) CE141	GD	1.49E-14	9.80E-15	1.52	0.66		
CO59 (N,G) CO60	AL,GD	4.41E-13	2.13E-13	2.07	0.48		
CO59 (N,G) CO60	GD	4.41E-13	1.00E-13	4.39	0.23	0.43	1.91
K4, D3 HRB4-3G, -3A							
NI58 (N,P) CO58		2.59E-16	1.76E-16	1.47	0.68		
FE54 (N,P) MN54		1.90E-16	1.16E-16	1.64	0.61		
FE58 (N,G) FE59		7.91E-13	5.28E-13	1.50	0.67		
CU63 (N,A) CO60		1.21E-18	3.02E-18	0.40	2.49		
CO59 (N,G) CO60		2.57E-11	1.29E-11	1.99	0.5	0.58	1.15
NI58 (N,P) CO58	GD	2.55E-16	1.75E-16	1.46	0.68		

Table C.1. Comparison of measured and calculated reaction rates for DOS and tubular-dosimeter capsules (continued)

Capsule and location/ reaction	Comment[a]	Reaction rate Calculated (C)	Reaction rate Measured (M)	C/M	M/C	M/C Corr.[b]	SS Corr. factor[c]
		(s^{-1})	(s^{-1})				
BE (N,X)		1.91E-15	2.04E-15	0.94	1.07		
NP237(N,F) ZR95	GD	1.21E-14	1.11E-14	1.09	0.92		
NP237(N,F) RU103	GD	1.21E-14	1.04E-14	1.16	0.86		
NP237(N,F) CS137	GD	1.21E-14	1.10E-14	1.11	0.9		
NP237(N,F) BA140	GD	1.21E-14	1.10E-14	1.10	0.91		
NP237(N,F) CE141	GD	1.21E-14	9.32E-15	1.30	0.77		
CO59 (N,G) CO60	GD	3.83E-13	8.40E-14	4.55	0.22	0.42	1.91

[a]GD indicates that the dosimeter was irradiated under a Gd cover. AL indicates diluted Co-59 dosimeter in a form of aluminum alloy with 0.116 wt% of Co. AL,GD indicates diluted Co-59 dosimeter was irradiated under Gd cover.
[b]This column gives the values of the M/C corrected for self-shielding, which is done by multiplying by the self-shielding correction factor given in the last column.
[c]Self-shielding correction factors for undiluted Co-59 dosimeters. A correction factor of 1.15 is applied to undiluted dosimeters irradiated bare, and a factor of 1.91 is applied to undiluted Co-59 dosimeters irradiated under Gd cover.

Table C.2. Comparison of calculated-to-measured reaction rate ratios for the dosimetry-dedicated capsules. The average of the threshold (N,P) reactions is compared with Np237 fission rate and with He producing reaction rate in Be.

	Calculated/Measured		
Location; Capsule	**Average of Ni58(N,P)Co58, Fe54(N,P)Mn54**	**Average of Np237(N,F)**	**Be(N/G,X)He**
K4, P3; DOS-10	1.11 ± 0.06[a]	1.23 ± 0.05	0.98[b]
K4, P8; DOS11	1.17 ± 0.11	1.16 ± 0.03	0.95
K4, P10; DOS-12	1.33 ± 0.19	1.26 ± 0.04	1.11
K2C, P9; DOS-7	0.53 ± 0.06	0.80 ± 0.01[c]	0.52
K2C, P13; DOS-13	0.56 ± 0.06	0.87 ± 0.01	0.58
K2C, P1; DOS-8	0.68 ± 0.01	0.99 ± 0.06	0.73
K2C, P4; DOS-9	0.69 ± 0.02	0.97 ± 0.06	0.70
K2W, P8; DOS-1	0.87 ± 0.15	0.91 ± 0.10	0.83
K2W, P3; DOS-2	0.82 ± 0.12	1.00 ± 0.08	0.98
K4, D1; HRB4-1G, -1A	1.59 ± 0.06	1.42 ± 0.05	1.03
K4, D2; HRB4-2G, -2A	1.38 ± 0.06	1.19 ± 0.05	0.74
K4, D3; HRB4-3G, -3A	1.52 ± 0.09	1.12 ± 0.04	0.94

[a]Only a few (typically 6) (N,P) reaction rates were available in each capsule. Therefore one-half of the interval width of the C/M values observed in the capsule is given as an estimate of the spread.
[b]For BE only, one measurement per capsule was available, so no spread is given.
[c] In the Key 2C locations, all of the considered reactions are significantly underestimated. However, for the (N,P) reactions and the Be(N/G,X)He reaction, the underestimation is very similar, while Np(N,F) reaction is substantially less underestimated.

Table C.3. Comparison of measured and calculated reaction rates for the surveillance capsules removed from Key 2C

Capsule and location/ reaction	Reaction rate Calculated (C)	Measured (M)	Average (M)	C/M	M/C
	(s^{-1})	(s^{-1})	(s^{-1})		
HB-2C-1; K2C, P5					
NI58 (N,P) CO58	6.701E-15	1.095E-14		0.61	1.63
FE54 (N,P) MN54	4.871E-15	7.869E-15		0.62	1.62
FE58 (N,G) FE59	2.838E-12	3.614E-12		0.79	1.27
HB-2C-2; K2C, P6					
NI58 (N,P) CO58	6.701E-15	1.196E-14		0.56	1.78
FE54 (N,P) MN54	4.871E-15	8.495E-15		0.57	1.74
FE58 (N,G) FE59	2.838E-12	3.895E-12		0.73	1.37
HB-2C-3; K2C, P7					
NI58 (N,P) CO58	6.701E-15	1.287E-14		0.52	1.92
FE54 (N,P) MN54	4.871E-15	9.259E-15		0.53	1.90
FE58 (N,G) FE59	2.838E-12	4.123E-12		0.69	1.45
HB-2C-10-1; K2C, P14					
NI58 (N,P) CO58	6.701E-15	1.077E-14	1.031E-14	0.65	1.54
FE54 (N,P) MN54	4.871E-15	7.788E-15	7.541E-15	0.65	1.55
FE58 (N,G) FE59	2.838E-12	3.526E-12	3.286E-12	0.86	1.16
HB-2C-10-2; K2C, P14					
NI58 (N,P) CO58	6.701E-15	9.846E-15			
FE54 (N,P) MN54	4.871E-15	7.293E-15			
FE58 (N,G) FE59	2.838E-12	3.045E-12			
HB-2C-11-1; K2C, P15					
NI58 (N,P) CO58	6.701E-15	1.007E-14	9.743E-15	0.69	1.45
FE54 (N,P) MN54	4.871E-15	7.471E-15	7.230E-15	0.67	1.48
FE58 (N,G) FE59	2.838E-12	3.387E-12	3.130E-12	0.91	1.10
HB-2C-11-2; K2C, P15					
NI58 (N,P) CO58	6.701E-15	9.416E-15			
FE54 (N,P) MN54	4.871E-15	6.989E-15			
FE58 (N,G) FE59	2.838E-12	2.873E-12			
HB-3-41; K2C, P3					
NI58 (N,P) CO58	6.701E-15	9.980E-15		0.67	1.49
FE54 (N,P) MN54	4.871E-15	7.673E-15		0.63	1.58
FE58 (N,G) FE59	2.838E-12	3.423E-12		0.83	1.21
CO59 (N,G) CO60	9.342E-11	1.083E-10		0.86	1.16
HB3-46; K2C, P4					
NI58 (N,P) CO58	6.701E-15	9.674E-15		0.69	1.44

Table C.3. Comparison of measured and calculated reaction rates for the surveillance capsules removed from Key 2C (continued)

Capsule and location/ reaction	Reaction rate Calculated (C)	Measured (M)	Average (M)	C/M	M/C
	(s^{-1})	(s^{-1})	(s^{-1})		
FE54 (N,P) MN54	4.871E-15	7.413E-15		0.66	1.52
FE58 (N,G) FE59	2.838E-12	3.469E-12		0.82	1.22
CO59 (N,G) CO60	9.342E-11	1.121E-10		0.83	1.20

Table C.4. Comparison of measured and calculated reaction rates for the surveillance capsules removed from Key 2W

Capsule and location/ reaction	Reaction rate Calculated[a] (C) (s^{-1})	Reaction rate Measured[b] (M) (s^{-1})	C/M	M/C
HB-1A-62; K2W, P6				
FE54 (N,P) MN54	2.762E-16	2.891E-16	0.96	1.05
NI58 (N,P) CO58	3.635E-16	3.839E-16	0.95	1.06
FE58 (N,G) FE59	1.688E-14	1.703E-14	0.99	1.01
CO59 (N,G) CO60	5.598E-13	5.702E-13	0.98	1.02
HB-1A-65; K2W, P7				
FE54 (N,P) MN54	2.762E-16	2.867E-16	0.96	1.04
NI58 (N,P) CO58	3.635E-16	3.759E-16	0.97	1.03
FE58 (N,G) FE59	1.688E-14	1.722E-14	0.98	1.02
CO59 (N,G) CO60	5.598E-13	5.770E-13	0.97	1.03
HB-1A-70; K2W, P8				
FE54 (N,P) MN54	2.762E-16	2.813E-16	0.98	1.02
NI58 (N,P) CO58	3.635E-16	3.808E-16	0.95	1.05
FE58 (N,G) FE59	1.688E-14	1.785E-14	0.95	1.06
CO59 (N,G) CO60	5.598E-13	6.147E-13	0.91	1.10
LS-1-1; K2W, P23				
FE54 (N,P) MN54	2.762E-16	3.365E-16	0.82	1.22
NI58 (N,P) CO58	3.635E-16	5.049E-16	0.72	1.39
FE58 (N,G) FE59	1.688E-14	2.224E-14	0.76	1.32
CO59 (N,G) CO60	5.598E-13	2.452E-12	0.23	4.38
LS-1-2; K2W, P24				
FE54 (N,P) MN54	2.762E-16	3.234E-16	0.85	1.17
NI58 (N,P) CO58	3.635E-16	4.802E-16	0.76	1.32
FE58 (N,G) FE59	1.688E-14	2.162E-14	0.78	1.28
CO59 (N,G) CO60	5.598E-13	2.282E-12	0.25	4.08
LS-1-3; K2W, P25				
FE54 (N,P) MN54	2.762E-16	3.196E-16	0.86	1.16
NI58 (N,P) CO58	3.635E-16	4.843E-16	0.75	1.33
FE58 (N,G) FE59	1.688E-14	2.078E-14	0.81	1.23
CO59 (N,G) CO60	5.598E-13	2.248E-12	0.25	4.02
NW-2-2; K2W, P1				
FE54 (N,P) MN54	2.762E-16	3.275E-16	0.84	1.19
NI58 (N,P) CO58	3.635E-16	4.942E-16	0.74	1.36
FE58 (N,G) FE59	1.688E-14	1.595E-14	1.06	0.94
CO59 (N,G) CO60	5.598E-13	1.676E-12	0.33	2.99

Table C.4. Comparison of measured and calculated reaction rates for the surveillance capsules removed from Key 2W (continued)

Capsule and location/ reaction	Reaction rate Calculated[a] (C)	Reaction rate Measured[b] (M)	C/M	M/C
	(s^{-1})	(s^{-1})		
NW-2-3; K2W, P2				
FE54 (N,P) MN54	2.762E-16	3.349E-16	0.82	1.21
NI58 (N,P) CO58	3.635E-16	5.040E-16	0.72	1.39
FE58 (N,G) FE59	1.688E-14	1.722E-14	0.98	1.02
CO59 (N,G) CO60	5.598E-13	1.739E-12	0.32	3.11

[a]Neutron fluxes for location 2 in DOS1 were used to calculate reaction rates.
[b]To convert measured activities to reaction rates 3 runs were necessary. The capsule HB-1A-70, K2W8 was out of reactor during cycle 400, and capsules LS- and NW- have different composition of dosimetry (wedge) wire.

Table C.5. Comparison of measured and calculated reaction rates for the surveillance capsules removed from Key 6

Capsule and location/ reaction	Reaction rate Measured (M) (s^{-1})	Reaction rate Calculated (C) (s^{-1})	C/M	M/C
SW-6-4; K6, P6				
FE54 (N,P) MN54	3.318E-17	3.419E-17	1.03	0.97
NI58 (N,P) CO58	4.689E-17	4.331E-17	0.92	1.08
FE58 (N,G) FE59	2.895E-16	4.777E-16	1.65	0.61
CO59 (N,G) CO60	2.319E-14	1.576E-14	0.68	1.47
SW-6-5; K6, P5			C/M	M/C
FE54 (N,P) MN54	3.290E-17	3.455E-17	1.05	0.95
NI58 (N,P) CO58	4.677E-17	4.382E-17	0.94	1.07
FE58 (N,G) FE59	3.092E-16	4.785E-16	1.55	0.65
CO59 (N,G) CO60	2.158E-14	1.582E-14	0.73	1.36
SW-6-6; K6, P8			C/M	M/C
FE54 (N,P) MN54	2.877E-17	2.871E-17	1.00	1.00
NI58 (N,P) CO58	4.076E-17	3.625E-17	0.89	1.12
FE58 (N,G) FE59	2.474E-16	3.230E-16	1.31	0.77
CO59 (N,G) CO60	1.896E-14	1.063E-14	0.56	1.78

Note: The wedge wire used to measure activities was steel 304L wire, heat number 63366, produced by the Atlantic Steel Company. Cobalt was present as an impurity, and its content was 0.04 wt%.

APPENDIX D

REANALYSIS OF DOSIMETRY DEDICATED CAPSULES REMOVED BEFORE 2008

The first dosimetry-dedicated capsules for the PV surveillance program were irradiated in HFIR in 1993. Since then considerable changes have occurred in the methodology of the transport calculations, as well as in the cross sections used for these calculations. The neutron and gamma multigroup fluxes, obtained from the transport calculations, are adjusted with measured reaction rates to obtain the best estimate of the irradiation parameters—namely the neutron and gamma-ray induced dpa rates. Although the best estimates are heavily "weighted" with measured reaction rates, changes in calculated fluxes—especially if large—cause changes in the best estimates of the dpa rates.

As mentioned before in all analyses of the HFIR dosimetry experiments before the present one, the concentration of Co in Co/Al wires was taken to be 0.100 wt %, based on information in Ref. 11. However, during the present analysis, the original material specification certificate dating back to 1969 was revisited and the cobalt content was found to be 0.116 wt % ± 0.002. It was expected that the impact of changed cobalt content on the adjusted dpa rates obtained in the previous analyses should be small. However, given the importance of HFIR PV surveillance, it appears prudent to revisit the previous analyses.

For these reasons, it was decided to revisit the analyses of the dosimetry-dedicated capsules analyzed before 2008. The results of this reanalysis are given in this appendix.

Table D.1. Calculated and adjusted irradiation parameters for the dosimetry-dedicated capsule DOS1 irradiated at Key 2W, position 8. New analysis accounts for the changed cobalt content and uses neutron and gamma fluxes from the latest transport calculations (Ref. 18). Values from the old analysis[a] are given for comparison.[b]

Location inside capsule	Irradiation parameters	Calculated value ( )[c]	Std.[d] (%)	New Adj. value ( )[c]	Std.[d] (%)	Adj./Calc.	Ni58(N,P) M/C[e]	Old Adj. value ( )[c]	Std.[d] (%)	Adj. new/old
DOS1-1	Neutron flux (E > 1.0 MeV)	1.97E+09	19	1.98E+09	6	1.00	1.04	2.04E+09	7	0.97
DOS1-1	Neutron flux (E > 0.5 MeV)	2.89E+09	19	2.89E+09	7	1.00		3.03E+09	7	0.95
DOS1-1	Neutron flux (E > 0.1 MeV)	4.09E+09	19	4.06E+09	8	0.99		4.30E+09	8	0.94
DOS1-1	Neutron flux (E < 0.414 eV)	1.33E+10	40	1.02E+10	6	0.76		1.15E+10	6	0.88
DOS1-1	Neutron dpa/s (Fe, ASTM)	2.96E-12	18	2.93E-12	6	0.99		3.05E-12	6	0.96
DOS1-1	Neutron dpa/s (Fe, ENDF-VI)	2.92E-12	18	2.89E-12	6	0.99		3.02E-12	6	0.96
DOS1-2	Neutron flux (E > 1.0 MeV)	2.45E+09	19	2.69E+09	7	1.10	1.14	2.74E+09	7	0.98
DOS1-2	Neutron flux (E > 0.5 MeV)	3.65E+09	19	4.00E+09	8	1.09		4.08E+09	8	0.98
DOS1-2	Neutron flux (E > 0.1 MeV)	5.25E+09	19	5.68E+09	8	1.08		5.83E+09	8	0.97
DOS1-2	Neutron flux (E < 0.414 eV)	1.79E+10	40	1.52E+10	22	0.85		1.71E+10	22	0.89
DOS1-2	Neutron dpa/s (Fe, ASTM)	3.71E-12	18	4.00E-12	6	1.08		4.10E-12	6	0.98
DOS1-2	Neutron dpa/s (Fe, ENDF-VI)	3.67E-12	18	3.96E-12	6	1.08		4.05E-12	6	0.98
DOS1-2	Gamma dpa/s	2.21E-12	27	2.31E-12	7	1.05		2.31E-12	8	1.00
DOS1-2	Gamma flux	8.56E+12	28	9.67E+12	16	1.13		9.85E+12	16	0.98
DOS1-2	Neutron + gamma dpa/s	5.91E-12		6.31E-12		1.07		6.40E-12	5	0.99
DOS1-2	Neutron dpa/s (E < 0.414 eV)	1.52E-13	40	1.29E-13	22	0.85				
DOS1-3	Neutron flux (E > 1.0 MeV)	3.05E+09	19	3.79E+09	7	1.24	1.27	3.83E+09	7	0.99
DOS1-3	Neutron flux (E > 0.5 MeV)	4.61E+09	19	5.72E+09	7	1.24		5.80E+09	7	0.99
DOS1-3	Neutron flux (E > 0.1 MeV)	6.69E+09	19	8.24E+09	8	1.23		8.40E+09	8	0.98
DOS1-3	Neutron flux (E < 0.414 eV)	2.39E+10	40	2.98E+10	6	1.25		3.36E+10	6	0.89
DOS1-3	Neutron dpa/s (Fe, ASTM)	4.64E-12	18	5.74E-12	6	1.24		5.85E-12	6	0.98
DOS1-3	Neutron dpa/s (Fe, ENDF-VI)	4.59E-12	18	5.68E-12	6	1.24		5.79E-12	6	0.98

[a] I. Remec, "Analysis of Dosimetry from Charpy and Dosimetry Capsules Removed from K2C in 2009," March 30, 2010.
[b] In both old and new analyses, the following dosimeter(s) were not used: Ce-141; chi-square per degree of freedom is 7.683E-1 for the old and 9.090E-01for the new adjustment.
[c] Units are $cm^{-2}s^{-1}$ for neutron and gamma-ray fluxes and s^{-1} for dpa/s.
[d] Percent standard deviation.
[e] The measured/calculated reaction rate ratios for Ni58(N,P) reaction are shown for reference.

Table D.2. Calculated and adjusted irradiation parameters for the dosimetry-dedicated capsule DOS2 irradiated at Key 2W, position 32. New analysis accounts for the changed cobalt content and uses neutron and gamma fluxes from the latest transport calculations (Ref. 18). Values from the old analysis[a] are given for comparison.[b]

Location inside capsule	Irradiation parameters	Calculated value ( )[c]	Std.[d] (%)	New Adj. value ( )[c]	Std.[d] (%)	Adj./Calc.	Ni58(N,P) M/C[e]	Old Adj. Value ( )[c]	Std.[d] (%)	Adj. new/old
DOS2-1	Neutron flux (E > 1.0 MeV)	1.97E+09	19	2.13E+09	6	1.09	1.10	2.21E+09	7	0.97
DOS2-1	Neutron flux (E > 0.5 MeV)	2.89E+09	19	3.12E+09	7	1.08		3.26E+09	7	0.96
DOS2-1	Neutron flux (E > 0.1 MeV)	4.09E+09	19	4.37E+09	8	1.07		4.63E+09	8	0.94
DOS2-1	Neutron flux (E < 0.414 eV)	1.33E+10	40	8.59E+09	5	0.65		9.75E+09	5	0.88
DOS2-1	Neutron dpa/s (Fe, ASTM)	2.96E-12	18	3.14E-12	6	1.06		3.27E-12	6	0.96
DOS2-1	Neutron dpa/s (Fe, ENDF-VI)	2.92E-12	18	3.11E-12	6	1.06		3.23E-12	6	0.96
DOS2-2	Neutron flux (E > 1.0 MeV)	2.45E+09	19	2.89E+09	7	1.18	1.23	2.94E+09	7	0.98
DOS2-2	Neutron flux (E > 0.5 MeV)	3.65E+09	19	4.29E+09	8	1.17		4.37E+09	8	0.98
DOS2-2	Neutron flux (E > 0.1 MeV)	5.25E+09	19	6.08E+09	8	1.16		6.23E+09	8	0.98
DOS2-2	Neutron flux (E < 0.414 eV)	1.79E+10	40	1.30E+10	22	0.73		1.46E+10	22	0.89
DOS2-2	Neutron dpa/s (Fe, ASTM)	3.71E-12	18	4.27E-12	6	1.15		4.36E-12	6	0.98
DOS2-2	Neutron dpa/s (Fe, ENDF-VI)	3.67E-12	18	4.22E-12	6	1.15		4.31E-12	6	0.98
DOS2-2	Gamma dpa/s	2.21E-12	27	1.85E-12	7	0.84		1.84E-12	8	1.01
DOS2-2	Gamma flux	8.56E+12	28	7.72E+12	16	0.90		7.86E+12	16	0.98
DOS2-2	Neutron + gamma dpa/s	5.91E-12		6.12E-12	5	1.03		6.20E-12	5	0.99
DOS2-2	Neutron dpa/s (E < 0.414 eV)	1.52E-13	40	1.10E-13	22	0.73				
DOS2-3	Neutron flux (E > 1.0 MeV)	3.05E+09	19	3.96E+09	7	1.30	1.34	4.00E+09	7	0.99
DOS2-3	Neutron flux (E > 0.5 MeV)	4.61E+09	19	5.96E+09	7	1.29		6.04E+09	7	0.99
DOS2-3	Neutron flux (E > 0.1 MeV)	6.69E+09	19	8.57E+09	8	1.28		8.73E+09	8	0.98
DOS2-3	Neutron flux (E < 0.414 eV)	2.39E+10	40	2.24E+10	5	0.94		2.54E+10	5	0.88
DOS2-3	Neutron dpa/s (Fe, ASTM)	4.64E-12	18	5.91E-12	6	1.27		6.01E-12	6	0.98
DOS2-3	Neutron dpa/s (Fe, ENDF-VI)	4.59E-12	18	5.85E-12	6	1.27		5.95E-12	6	0.98

[a] I. Remec, "Analysis of Dosimetry from Charpy and Dosimetry Capsules Removed from K2C in 2009," March 30, 2010.
[b] In both old and new analyses, the following dosimeters were not used in adjustment: 3 undiluted Co-59, Ce-141; chi-square per degree of freedom is 6.035E-01 for the old and 8.376E-01 for the new adjustment.
[c] Units are $cm^{-2}s^{-1}$ for neutron and gamma-ray fluxes and s^{-1} for dpa/s.
[d] Percent standard deviation.
[e] The measured/calculated reaction rate ratios for Ni58(N,P) reaction are shown for reference.

Table D.3. Calculated and adjusted irradiation parameters at K3, P3 (capsule DOS-3). New analysis accounts for the changed cobalt content and uses neutron and gamma fluxes from the latest transport calculations (Ref. 18). Values from the old analysis (Ref. 7) are given for comparison.

Location inside capsule	Irradiation parameter	New calculated value ( )[a]	Std.[b] (%)	New adjusted value ( )[a]	Std.[b] (%)	New Adj. / Calc.	Old calculated value ( )[a]	Std.[b] (%)	Old adjusted value ( )[a]	Std.[b] (%)	Old Adj./ Calc.	Calc. New/ Calc. Old.	Adj. New\ Adj. Old	New Ni58 (n,p) M/C[c]
Pos. 1	Neutron flux (E > 1 MeV)	1.34E+09	58	7.51E+08	15	0.56	9.74E+08	58	7.29E+08	15	0.75	1.38	1.03	0.60
	Fluence > 0.5 MeV	2.31E+09	58	1.30E+09	18	0.56	1.68E+09	58	1.27E+09	18	0.76	1.37	1.02	0.91
	Fluence > 0.1 MeV	3.80E+09	57	2.12E+09	20	0.56	2.77E+09	57	2.1E+09	21	0.76	1.37	1.01	1.39
	Fluence > 0.414	3.09E+10	60	1.21E+10	7	0.39	1.66E+10	60	1.34E+10	7	0.81	1.86	0.90	
	Neutron dpa/s (FE, ASTM)	2.35E-12	50	1.26E-12	13	0.54	1.66E-12	52	1.27E-12	14	0.76	1.42	1.00	
	Neutron dpa/s (FE, ENDF-VI)	2.33E-12	51	1.26E-12	14	0.54	1.65E-12	52	1.26E-12	14	0.76	1.41	1.00	
Pos. 2	Neutron flux (E > 1 MeV)	1.34E+09	58	1.18E+09	15	0.88	1.32E+09	58	1.17E+09	15	0.89	1.02	1.00	
	Neutron flux (E > 0.5 MeV)	2.31E+09	58	2.05E+09	17	0.89	2.27E+09	58	2.05E+09	17	0.90	1.02	1.00	
	Neutron flux (E > 0.1 MeV)	3.80E+09	57	3.37E+09	20	0.89	3.75E+09	57	3.4E+09	20	0.91	1.01	0.99	
	Neutron flux (E < 0.414 eV)	3.09E+10	60	3.15E+10	38	1.02	3.07E+10	60	3.39E+10	38	1.10	1.01	0.93	
	Neutron dpa/s (Fe, ASTM)	2.35E-12	50	2.11E-12	13	0.90	2.31E-12	50	2.15E-12	13	0.93	1.02	0.98	
	Neutron dpa/s (Fe, ENDF-VI)	2.33E-12	51	2.09E-12	13	0.90	2.29E-12	51	2.13E-12	13	0.93	1.02	0.98	
	Gamma dpa/s	9.87E-13	54	1.39E-12	9	1.41	9.83E-13	54	1.38E-12	9	1.41	1.00	1.01	
	Gamma flux	3.26E+12	56	4.67E+12	28	1.43	3.25E+12	56	4.69E+12	28	1.44	1.00	1.00	
	Neutron + gamma dpa/s	3.34E-12		3.50E-12		1.05	3.29E-12		3.54E-12	9	1.07	1.01	0.99	
Pos. 3	Neutron flux (E > 1 MeV)	1.34E+09	58	1.78E+09	15	1.33	2.04E+09	59	1.82E+09	15	0.89	0.66	0.98	
	Neutron flux (E > 0.5 MeV)	2.31E+09	58	3.13E+09	18	1.36	3.54E+09	58	3.22E+09	18	0.91	0.65	0.97	
	Neutron flux (E > 0.1 MeV)	3.80E+09	57	5.27E+09	20	1.38	5.88E+09	57	5.45E+09	20	0.93	0.65	0.97	
	Neutron flux (E < 0.414 eV)	3.09E+10	60	9.17E+10	7	2.97	7.1E+10	60	1.05E+11	6	1.47	0.44	0.88	
	Neutron dpa/s (Fe, ASTM)	2.35E-12	50	3.69E-12	13	1.57	3.78E-12	49	3.86E-12	13	1.02	0.62	0.95	
	Neutron dpa/s (Fe, ENDF-VI)	2.33E-12	51	3.62E-12	14	1.55	3.74E-12	49	3.79E-12	13	1.02	0.62	0.96	

[a]Units are $cm^{-2}s^{-1}$ for neutron and gamma-ray fluxes and s^{-1} for dpa/s.
[b]Percent standard deviation. The $\chi 2$ per degree of freedom was 8.677E-01 for the old adjustment and 1.011E-01 for the new adjustment run.
[c]Nickel measured/calculated reaction rate ratios for the three vials are shown for reference.

Table D.4. Calculated and adjusted irradiation parameters at K3, P8 (capsule DOS-4). New analysis accounts for the changed cobalt content and uses neutron and gamma fluxes from the latest transport calculations (Ref. 18). Values from the old analysis (Ref. 7) are given for comparison.

Location inside capsule	Irradiation parameter	New calculated value ( )[a]	Std.[b] (%)	New adjusted value ( )[a]	Std.[b] (%)	New Adj. / Calc.	Old calculated value ( )[a]	Std.[b] (%)	Old adjusted value ( )[a]	Std.[b] (%)	Old Adj./ Calc.	Calc. New/ Calc. Old	Adj. New\ Adj. Old	New Ni58 (n,p) M/C[c]
	Neutron flux (E > 1 MeV)	2.37E+09	58	2.01E+09	17	0.85	1.84E+09	19	1.76E+09	7	0.96	1.29	1.14	0.85
	Fluence > 0.5 MeV	3.99E+09	58	3.35E+09	20	0.84	2.98E+09	19	2.85E+09	8	0.95	1.34	1.17	1.11
Pos. 1	Fluence > 0.1 MeV	6.48E+09	57	5.31E+09	22	0.82	4.74E+09	19	4.48E+09	8	0.94	1.37	1.18	1.63
	Fluence > 0.414	4.30E+10	60	1.71E+10	7	0.40	3.15E+10	40	1.94E+10	6	0.62	1.37	0.88	
	Neutron dpa/s (FE, ASTM)	4.07E-12	51	3.17E-12	14	0.78	3.13E-12	18	2.86E-12	6	0.92	1.30	1.11	
	Neutron dpa/s (FE, ENDF-VI)	4.04E-12	52	3.16E-12	15	0.78	3.10E-12	18	2.84E-12	6	0.92	1.30	1.11	
	Neutron flux (E > 1 MeV)	2.37E+09	58	2.64E+09	17	1.11	2.32E+09	19	2.64E+09	8	1.14	1.02	1.00	
	Neutron flux (E > 0.5 MeV)	3.99E+09	58	4.42E+09	20	1.11	3.91E+09	19	4.45E+09	8	1.14	1.02	0.99	
	Neutron flux (E > 0.1 MeV)	6.48E+09	57	7.08E+09	22	1.09	6.39E+09	19	7.19E+09	9	1.13	1.02	0.98	
Pos. 2	Neutron flux (E < 0.414 eV)	4.30E+10	60	3.74E+10	38	0.87	4.26E+10	40	3.62E+10	22	0.85	1.01	1.03	
	Neutron dpa/s (Fe, ASTM)	4.07E-12	51	4.34E-12	15	1.07	3.99E-12	18	4.38E-12	7	1.10	1.02	0.99	
	Neutron dpa/s (Fe, ENDF-VI)	4.04E-12	52	4.31E-12	15	1.07	3.95E-12	18	4.35E-12	7	1.10	1.02	0.99	
	Gamma dpa/s	1.00E-12	54	1.05E-12	16	1.04	9.97E-13	27	1.05E-12	12	1.06	1.00	0.99	
	Gamma flux	3.17E+12	56	3.29E+12	33	1.04	3.16E+12	28	3.33E+12	18	1.05	1.00	0.99	
	Neutron + gamma dpa/s	5.07E-12		5.39E-12			4.98E-12		5.43E-12	6	1.09	1.02	0.99	
	Neutron flux (E > 1 MeV)	2.37E+09	58	3.87E+09	17	1.63	3.20E+09	19	4.00E+09	7	1.25	0.74	0.97	
	Neutron flux (E > 0.5 MeV)	3.99E+09	58	6.53E+09	20	1.64	5.39E+09	19	6.72E+09	8	1.25	0.74	0.97	
Pos. 3	Neutron flux (E > 0.1 MeV)	6.48E+09	57	1.06E+10	22	1.64	8.81E+09	19	1.09E+10	8	1.24	0.74	0.97	
	Neutron flux (E < 0.414 eV)	4.30E+10	60	1.00E+11	7	2.33	9.43E+10	40	1.13E+11	6	1.20	0.46	0.89	
	Neutron dpa/s (Fe, ASTM)	4.07E-12	51	6.89E-12	14	1.69	5.80E-12	18	7.15E-12	6	1.23	0.70	0.96	
	Neutron dpa/s (Fe, ENDF-VI)	4.04E-12	52	6.81E-12	15	1.69	5.73E-12	18	7.06E-12	6	1.23	0.70	0.96	

[a]Units are $cm^{-2}s^{-1}$ for neutron and gamma-ray fluxes and s^{-1} for dpa/s.
[b]Percent standard deviation. The $\chi 2$ per degree of freedom was 5.724E-01 for the old adjustment and 9.297E-01 for the new adjustment run.
[c]Nickel measured/calculated reaction rate ratios for the three vials are shown for reference.

Table D.5. Calculated and adjusted irradiation parameters at K3, P10 (capsule DOS-5). New analysis accounts for the changed cobalt content and uses neutron and gamma fluxes from the latest transport calculations (Ref. 18). Values from the old analysis (Ref. 7) are given for comparison.

Location inside capsule	Irradiation parameter	New calculated value ( )[a]	Std.[b] (%)	New adjusted value ( )[a]	Std.[b] (%)	New Adj. / Calc.	Old calculated value ( )[a]	Std.[b] (%)	Old adjusted value ( )[a]	Std.[b] (%)	Old Adj./ Calc.	Calc. New/ Calc. Old	Adj. New\ Adj. Old	New Ni58 (n,p) M/C[c]
	Neutron flux (E > 1 MeV)	1.76E+09	39	1.20E+09	11	0.68	1.16E+09	34	1.13E+09	10	0.98	1.52	1.06	0.73
	Fluence > 0.5 MeV	3.04E+09	39	2.05E+09	13	0.68	1.98E+09	34	1.93E+09	11	0.97	1.53	1.06	1.09
Pos. 1	Fluence > 0.1 MeV	5.02E+09	38	3.34E+09	14	0.67	3.25E+09	33	3.16E+09	13	0.97	1.55	1.06	1.67
	Fluence > 0.414	3.26E+10	40	1.84E+10	5	0.56	1.67E+10	40	2.09E+10	5	1.25	1.95	0.88	
	Neutron dpa/s (FE, ASTM)	3.06E-12	34	2.03E-12	10	0.66	1.97E-12	30	1.98E-12	9	1.00	1.55	1.02	
	Neutron dpa/s (FE, ENDF-VI)	3.04E-12	34	2.01E-12	10	0.66	1.96E-12	31	1.96E-12	9	1.00	1.55	1.03	
	Neutron flux (E > 1 MeV)	1.76E+09	39	1.78E+09	11	1.01	1.72E+09	34	1.80E+09	10	1.05	1.02	0.99	
	Neutron flux (E > 0.5 MeV)	3.04E+09	39	3.06E+09	12	1.01	2.98E+09	34	3.11E+09	11	1.04	1.02	0.99	
	Neutron flux (E > 0.1 MeV)	5.02E+09	38	5.00E+09	14	0.99	4.95E+09	33	5.11E+09	12	1.03	1.01	0.98	
Pos. 2	Neutron flux (E < 0.414 eV)	3.26E+10	40	3.45E+10	26	1.06	3.23E+10	40	3.72E+10	24	1.15	1.01	0.93	
	Neutron dpa/s (Fe, ASTM)	3.06E-12	34	3.08E-12	10	1.01	3.00E-12	30	3.16E-12	9	1.05	1.02	0.98	
	Neutron dpa/s (Fe, ENDF-VI)	3.04E-12	34	3.06E-12	10	1.01	2.98E-12	30	3.14E-12	9	1.05	1.02	0.98	
	Gamma dpa/s	9.92E-13	36	9.41E-13	9	0.95	9.87E-13	31	9.40E-13	9	0.95	1.01	1.00	
	Gamma flux	3.48E+12	38	3.53E+12	21	1.01	3.47E+12	33	3.56E+12	19	1.02	1.00	0.99	
	Neutron + gamma dpa/s	4.05E-12		4.02E-12		0.99	3.99E-12		4.10E-12	7	1.03	1.02	0.98	
	Neutron flux (E > 1 MeV)	1.76E+09	39	2.79E+09	11	1.58	2.36E+09	34	2.97E+09	10	1.26	0.75	0.94	
	Neutron flux (E > 0.5 MeV)	3.04E+09	39	4.82E+09	13	1.59	4.08E+09	34	5.13E+09	11	1.26	0.74	0.94	
Pos. 3	Neutron flux (E > 0.1 MeV)	5.02E+09	38	8.01E+09	14	1.59	6.79E+09	33	8.52E+09	13	1.26	0.74	0.94	
	Neutron flux (E < 0.414 eV)	3.26E+10	40	9.25E+10	5	2.84	6.73E+10	40	1.07E+11	4	1.59	0.48	0.86	
	Neutron dpa/s (Fe, ASTM)	3.06E-12	34	5.26E-12	10	1.72	4.29E-12	29	5.63E-12	8	1.31	0.71	0.93	
	Neutron dpa/s (Fe, ENDF-VI)	3.04E-12	34	5.20E-12	10	1.71	4.24E-12	29	5.55E-12	9	1.31	0.72	0.94	

[a]Units are $cm^{-2}s^{-1}$ for neutron and gamma-ray fluxes and s^{-1} for dpa/s.
[b]Percent standard deviation. The $\chi 2$ per degree of freedom was 0.5561 for the old adjustment and 0.895 for the new adjustment run.
[c]Nickel measured/calculated reaction rate ratios for the three vials are shown for reference.

Table D.6. Calculated and adjusted irradiation parameters at K7, P1 (capsule DOS-6). New analysis accounts for the changed cobalt content and uses neutron and gamma fluxes from the latest transport calculations (Ref. 18). Values from the old analysis (Ref. 7) are given for comparison.

Location inside capsule	Irradiation parameter	New calculated value ( )[a]	Std.[b] (%)	New adjusted value ( )[a]	Std.[b] (%)	New Adj. / Calc.	Old calculated value ( )[a]	Std.[b] (%)	Old adjusted value ( )[a]	Std.[b] (%)	Old Adj./ Calc.	Calc. New/ Calc. Old	Adj. New\ Adj. Old	New Ni58 (n,p) M/C[c]
Pos. 1	Neutron flux (E > 1 MeV)	1.34E+08	28	7.35E+07	7	0.55	5.48E+07	19	6.90E+07	5	1.26	2.44	1.07	0.56
	Fluence > 0.5 MeV	1.60E+08	28	8.76E+07	8	0.55	6.49E+07	19	8.14E+07	6	1.25	2.47	1.08	
	Fluence > 0.1 MeV	1.94E+08	28	1.05E+08	9	0.54	7.82E+07	19	9.77E+07	6	1.25	2.48	1.08	
	Fluence > 0.414	3.62E+08	50	1.11E+08	4	0.31	2.43E+08	40	1.30E+08	4	0.53	1.49	0.86	
	Neutron dpa/s (FE, ASTM)	2.10E-13	28	1.16E-13	5	0.55	8.93E-14	18	1.11E-13	4	1.25	2.36	1.05	
	Neutron dpa/s (FE, ENDF-VI)	2.06E-13	28	1.14E-13	6	0.55	8.71E-14	18	1.09E-13	4	1.25	2.36	1.05	
Pos. 2	Neutron flux (E > 1 MeV)	1.34E+08	28	7.44E+07	8	0.56	5.48E+07	19	7.06E+07	6	1.29	2.44	1.05	0.57
	Neutron flux (E > 0.5 MeV)	1.60E+08	28	8.87E+07	9	0.55	6.49E+07	19	8.33E+07	7	1.28	2.47	1.07	
	Neutron flux (E > 0.1 MeV)	1.94E+08	28	1.07E+08	9	0.55	7.82E+07	19	1.00E+08	7	1.28	2.48	1.07	
	Neutron flux (E < 0.414 eV)	3.62E+08	50	1.09E+08	28	0.30	2.43E+08	40	1.43E+08	21	0.59	1.49	0.76	
	Neutron dpa/s (Fe, ASTM)	2.10E-13	28	1.18E-13	6	0.56	8.93E-14	18	1.14E-13	6	1.28	2.36	1.03	
	Neutron dpa/s (Fe, ENDF-VI)	2.06E-13	28	1.15E-13	7	0.56	8.71E-14	18	1.11E-13	6	1.28	2.36	1.03	
	Gamma dpa/s	1.58E-12	27	9.65E-13	6	0.61	9.81E-13	27	9.93E-13	6	1.01	1.61	0.97	
	Gamma flux	9.25E+12	29	6.05E+12	16	0.65	7.07E+12	29	7.58E+12	16	1.07	1.31	0.80	
	Neutron + gamma dpa/s	1.79E-12		1.08E-12		0.65	1.07E-12		1.11E-12	5	1.03	1.67	0.98	
Pos. 3	Neutron flux (E > 1 MeV)	1.34E+08	28	7.25E+07	7	0.54	5.48E+07	19	6.80E+07	5	1.24	2.44	1.06	0.55
	Neutron flux (E > 0.5 MeV)	1.60E+08	28	8.63E+07	8	0.54	6.49E+07	19	8.03E+07	6	1.24	2.47	1.08	
	Neutron flux (E > 0.1 MeV)	1.94E+08	28	1.04E+08	9	0.53	7.82E+07	19	9.62E+07	6	1.23	2.48	1.08	
	Neutron flux (E < 0.414 eV)	3.62E+08	50	9.70E+07	4	0.27	2.43E+08	40	1.14E+08	4	0.47	1.49	0.85	
	Neutron dpa/s (Fe, ASTM)	2.10E-13	28	1.15E-13	5	0.55	8.93E-14	18	1.10E-13	4	1.23	2.36	1.05	
	Neutron dpa/s (Fe, ENDF-VI)	2.06E-13	28	1.12E-13	6	0.55	8.71E-14	18	1.07E-13	4	1.23	2.36	1.05	

[a]Units are $cm^{-2}s^{-1}$ for neutron and gamma-ray fluxes and s^{-1} for dpa/s.
[b]Percent standard deviation. The $\chi 2$ per degree of freedom was 9.608E-01 for the old adjustment and 9.07E-01 for the new adjustment run.
[c]Nickel measured/calculated reaction rate ratios for the three vials are shown for reference.

Table D.7. Calculated and adjusted irradiation parameters for the dosimetry-dedicated capsule DOS8 irradiated at the Key 2C, position 1. New analysis accounts for the changed cobalt content and uses neutron and gamma fluxes from the latest transport calculations (Ref. 18). Values from the old analysis[a,b] are given for comparison.[c]

Irradiation parameters	Calculated value ( )[d]	Std.[e] (%)	New Adj. value ( )[d]	Std.[e] (%)	Adj./Calc.	Ni58(N,P) M/C[f]	Old Adj. value ( )[d]	Std.[e] (%)	New/Old
Neutron flux (E > 1.0 MeV)	6.95E+10	29	1.01E+11	9	1.45	1.45	1.01E+11	6	0.99
Neutron flux (E > 0.5 MeV)	1.15E+11	29	1.65E+11	10	1.44	1.49	1.66E+11	7	1.00
Neutron flux (E > 0.1 MeV)	1.90E+11	29	2.69E+11	11	1.41	1.45	2.71E+11	8	0.99
Neutron flux (E < 0.414 eV)	3.06E+12	30	2.29E+12	5	0.75		2.60E+12	5	0.88
Neutron dpa/s (Fe, ASTM)	1.32E-10	24	1.69E-10	7	1.28		1.73E-10	5	0.98
Neutron dpa/s (Fe, ENDF-VI)	1.30E-10	24	1.67E-10	7	1.29		1.71E-10	5	0.98
Gamma dpa/s	8.66E-12	27	9.70E-12	22	1.12		9.73E-12	22	1.00
Gamma flux	1.65E+13	28	1.84E+13	25	1.11		1.90E+13	24	0.97
Neutron + gamma dpa/s	1.40E-10		1.79E-10	6	1.27		1.83E-10	5	0.98

[a]I. Remec, "Analysis of Dosimetry from Charpy and Dosimetry Capsules Removed from K2C in 2009," March 30, 2010.
[b]I. Remec and C. A. Baldwin, "Analysis of HFIR Dosimetry Experiments performed in Cycles 400 and 401," ORNL/TM-2008/046, September 2008.
[c]In both old and new analyses, the following dosimeters were not used in adjustment: 2 Cu, all (4) Np, 1 pure Co in Gd; chi-square per degree of freedom for the new adjustment is 0.968; for the old adjustment, chi-square per degree of freedom is 0.493.
[d]Units are $cm^{-2}s^{-1}$ for neutron and gamma-ray fluxes and s^{-1} for dpa/s.
[e]Percent standard deviation.
[f]The measured/calculated reaction rate ratios for Ni58(N,P) reaction are shown for reference.

Table D.8. Calculated and adjusted irradiation parameters for the dosimetry-dedicated capsule DOS9 irradiated at Key 2C, Position 4. New analysis accounts for the changed cobalt content and uses neutron and gamma fluxes from the latest transport calculations (Ref. 18). Values from the old analysis[a,b] are given for comparison.[c]

Irradiation parameters	Calculated value ( )[d]	Std.[e] (%)	New Adj. value ( )[d]	Std.[e] (%)	Adj./Calc.	Ni58(N,P) M/C[f]	Old Adj. value ( )[d]	Std.[e] (%)	New/Old
Neutron flux (E > 1.0 MeV)	6.95E+10	44	9.94E+10	13	1.43	1.39	9.97E+10	9	1.00
Neutron flux (E > 0.5 MeV)	1.15E+11	44	1.63E+11	14	1.42	1.50	1.63E+11	10	1.00
Neutron flux (E > 0.1 MeV)	1.90E+11	43	2.61E+11	16	1.37	1.48	2.62E+11	11	1.00
Neutron flux (E < 0.414 eV)	3.06E+12	45	2.52E+12	3	0.82		2.89E+12	3	0.87
Neutron dpa/s (Fe, ASTM)	1.32E-10	36	1.65E-10	9	1.26		1.69E-10	7	0.98
Neutron dpa/s (Fe, ENDF-VI)	1.30E-10	36	1.63E-10	10	1.26		1.67E-10	7	0.98
Gamma dpa/s	8.66E-12	41	1.07E-11	25	1.24		1.04E-11	25	1.03
Gamma flux	1.65E+13	41	1.98E+13	33	1.20		1.99E+13	30	1.00
Neutron + gamma dpa/s	1.40E-10		1.76E-10		1.25		1.80E-10	6	0.98

[a]I. Remec, "Analysis of Dosimetry from Charpy and Dosimetry Capsules Removed from K2C in 2009, March 30, 2010."
[b]I. Remec and C. A. Baldwin, "Analysis of HFIR Dosimetry Experiments Performed in Cycles 400 and 401," ORNL/TM-2008/046, September 2008.
[c]In both old and new analyses, the following dosimeter(s) were not used in adjustment: 2 Cu and all (4) Np; chi-square per degree of freedom for the old adjustment is 0.963 and for the new adjustment is 0.984.
[d]Units are $cm^{-2}s^{-1}$ for neutron and gamma-ray fluxes and s^{-1} for dpa/s.
[e]Percent standard deviation.
[f]The measured/calculated reaction rate ratios for Ni58(N,P) reaction are shown for reference.

Table D.9. Calculated and adjusted irradiation parameters at 2D1C (capsules HRB2-1G and HRB2-1A, position 2; dosimeter sets GD-14 and Al-27; HRB2-1C). New analysis accounts for the changed cobalt content and uses neutron and gamma fluxes from the latest transport calculations (Ref. 18). Values from the old analysis (Ref. 7) are given for comparison.

Irradiation parameter	New calculated value ( )[a]	Std.[b] (%)	New adjusted value ( )[a]	Std.[b] (%)	New Adj. / Calc.	Old calculated value ( )[a]	Std.[b] (%)	Old adjusted value ( )[a]	Std.[b] (%)	Old Adj./ Calc.	Calc. New/ Calc. Old	Adj. New\ Adj. Old	New Ni58 (n,p) M/C[c]
Neutron flux (E > 1 MeV)	2.88E+10	83	2.18E+10	14	0.76	2.79E+10	63	2.23E+10	12	0.80	1.03	0.97	0.93
Neutron flux (E > 0.5 MeV)	4.55E+10	82	3.29E+10	15	0.72	4.40E+10	63	3.41E+10	13	0.78	1.03	0.96	0.86
Neutron flux (E > 0.1 MeV)	7.20E+10	81	4.95E+10	18	0.69	6.95E+10	62	5.18E+10	15	0.75	1.04	0.95	
Neutron flux (E < 0.414 eV)	2.48E+12	90	1.29E+12	6	0.52	2.25E+12	65	1.43E+12	6	0.64	1.10	0.90	
Neutron dpa/s (Fe, ASTM)	6.44E-11	64	4.25E-11	8	0.66	6.10E-11	48	4.48E-11	7	0.73	1.05	0.95	
Neutron dpa/s (Fe, ENDF-VI)	6.24E-11	64	4.13E-11	8	0.66	5.92E-11	49	4.35E-11	7	0.73	1.05	0.95	
Gamma dpa/s	3.06E-12	76	6.76E-12	32	2.21	2.76E-12	58	6.13E-12	31	2.22	1.11	1.10	
Gamma flux	1.01E+13	80	2.34E+13	53	2.32	9.39E+12	61	2.10E+13	44	2.23	1.07	1.12	
Neutron + gamma dpa/s	6.55E-11		4.92E-11		0.75	6.38E-11		5.09E-11	7	0.80	1.03	0.97	

[a]Units are $cm^{-2}s^{-1}$ for neutron and gamma-ray fluxes and s^{-1} for dpa/s.
[b]Percent standard deviation. The $\chi 2$ per degree of freedom was 1.033 for the old adjustment and 1.000 for the new adjustment run.
[c]Nickel measured/calculated reaction rate ratios are shown for reference.

Table D.10. Calculated and adjusted irradiation parameters at 2D2C (capsules HRB2-2G and HRB2-2A, position 2; dosimeter sets GD-16 and Al-29; HRB2-2C). New analysis accounts for the changed cobalt content and uses neutron and gamma fluxes from the latest transport calculations (Ref. 18). Values from the old analysis (Ref. 7) are given for comparison.

Irradiation parameter	New calculated value ( )[a]	Std.[b] (%)	New adjusted value ( )[a]	Std.[b] (%)	New Adj. / Calc.	Old calculated value ( )[a]	Std.[b] (%)	Old adjusted value ( )[a]	Std.[b] (%)	Old Adj./ Calc.	Calc. New/ Calc. Old	Adj. New\ Adj. Old	New Ni58 (n,p) M/C[c]
Neutron flux (E > 1 MeV)	2.88E+10	19	3.00E+10	6	1.04	2.79E+10	19	2.99E+10	6	1.07	1.03	1.00	1.08
Neutron flux (E > 0.5 MeV)	4.55E+10	19	4.72E+10	6	1.04	4.40E+10	19	4.70E+10	6	1.07	1.03	1.00	1.06
Neutron flux (E > 0.1 MeV)	7.20E+10	19	7.42E+10	7	1.03	6.95E+10	19	7.40E+10	7	1.07	1.04	1.00	
Neutron flux (E < 0.414 eV)	2.48E+12	20	1.88E+12	6	0.76	2.25E+12	20	2.08E+12	6	0.92	1.10	0.90	
Neutron dpa/s (Fe, ASTM)	6.44E-11	15	6.07E-11	4	0.94	6.10E-11	15	6.24E-11	4	1.02	1.05	0.97	
Neutron dpa/s (Fe, ENDF-VI)	6.24E-11	15	5.91E-11	4	0.95	5.92E-11	15	6.07E-11	4	1.02	1.05	0.97	
Gamma dpa/s	3.06E-12	27	3.44E-12	20	1.13	2.76E-12	27	3.23E-12	21	1.17	1.11	1.06	
Gamma flux	1.01E+13	28	1.13E+13	24	1.13	9.39E+12	28	1.09E+13	24	1.16	1.07	1.04	
Neutron + gamma dpa/s	6.74E-11		6.41E-11		0.95	6.38E-11		6.56E-11	4	1.03	1.06	0.98	

[a]Units are $cm^{-2}s^{-1}$ for neutron and gamma-ray fluxes and s^{-1} for dpa/s.
[b]Percent standard deviation. The $\chi 2$ per degree of freedom was 4.071E-01 for the old adjustment and 8.082E-01 for the new adjustment run.
[c]Nickel measured/calculated reaction rate ratios are shown for reference.

Table D.11. Calculated and adjusted irradiation parameters at 2D1W (capsules HRB2-1G and HRB2-1A, position 4; dosimeter sets GD-15 and Al-28; HRB1-W). New analysis accounts for the changed cobalt content and uses neutron and gamma fluxes from the latest transport calculations (Ref. 18). Values from the old analysis (Ref. 7) are given for comparison.

Irradiation parameter	New calculated value ( )[a]	Std.[b] (%)	New adjusted value ( )[a]	Std.[b] (%)	New Adj. / Calc.	Old calculated value ( )[a]	Std.[b] (%)	Old adjusted value ( )[a]	Std.[b] (%)	Old Adj./ Calc.	Calc. New/ Calc. Old	Adj. New\ Adj. Old	New Ni58 (n,p) M/C[c]
Neutron flux (E > 1 MeV)	9.86E+08	19	8.87E+08	6	0.90	9.42E+08	19	8.97E+08	6	0.95	1.05	0.99	0.90
Neutron flux (E > 0.5 MeV)	1.79E+09	19	1.62E+09	7	0.90	1.72E+09	19	1.64E+09	7	0.96	1.04	0.99	0.88
Neutron flux (E > 0.1 MeV)	3.13E+09	19	2.85E+09	8	0.91	3.01E+09	19	2.91E+09	8	0.97	1.04	0.98	
Neutron flux (E < 0.414 eV)	1.14E+10	40	1.43E+10	6	1.26	1.09E+10	40	1.61E+10	6	1.48	1.05	0.89	
Neutron dpa/s (Fe, ASTM)	1.79E-12	18	1.66E-12	6	0.93	1.71E-12	18	1.71E-12	6	1.00	1.04	0.97	
Neutron dpa/s (Fe, ENDF-VI)	1.79E-12	18	1.66E-12	6	0.93	1.71E-12	18	1.70E-12	6	0.99	1.04	0.97	
Gamma dpa/s	1.12E-12	27	9.76E-13	7	0.87	1.01E-12	27	9.71E-13	7	0.96	1.11	1.01	
Gamma flux	4.88E+12	28	4.09E+12	17	0.84	4.64E+12	28	4.11E+12	16	0.89	1.05	0.99	
Neutron + gamma dpa/s	2.91E-12		2.64E-12		0.91	2.72E-12		2.68E-12	4	0.98	1.07	0.98	

[a]Units are $cm^{-2}s^{-1}$ for neutron and gamma-ray fluxes and s^{-1} for dpa/s.
[b]Percent standard deviation. The $\chi 2$ per degree of freedom was 7.225E-1 for the old adjustment and 7.095E-1 for the new adjustment run.
[c]Nickel measured/calculated reaction rate ratios are shown for reference.

Table D.12. Calculated and adjusted irradiation parameters at 2D2W (capsules HRB2-2G and HRB2-2A, position 4; dosimeter sets GD-17 and Al-30; HRB2-2W). New analysis accounts for the changed cobalt content and uses neutron and gamma fluxes from the latest transport calculations (Ref. 18). Values from the old analysis (Ref. 7) are given for comparison

Irradiation parameter	New calculated value ( )[a]	Std.[b] (%)	New adjusted value ( )[a]	Std.[b] (%)	New Adj. / Calc.	Old calculated value ( )[a]	Std.[b] (%)	Old adjusted value ( )[a]	Std.[b] (%)	Old Adj./ Calc.	Calc. New/ Calc. Old	Adj. New\ Adj. Old	New Ni58 (n,p) M/C[c]
Neutron flux (E > 1 MeV)	9.86E+08	19	9.87E+08	6	1.00	9.42E+08	19	9.97E+08	6	1.06	1.05	0.99	1.01
Neutron flux (E > 0.5 MeV)	1.79E+09	19	1.79E+09	7	1.00	1.72E+09	19	1.82E+09	7	1.06	1.04	0.99	1.02
Neutron flux (E > 0.1 MeV)	3.13E+09	19	3.13E+09	8	1.00	3.01E+09	19	3.19E+09	8	1.06	1.04	0.98	
Neutron flux (E < 0.414 eV)	1.14E+10	40	1.49E+10	6	1.31	1.09E+10	40	1.68E+10	6	1.54	1.05	0.89	
Neutron dpa/s (Fe, ASTM)	1.79E-12	18	1.82E-12	6	1.02	1.71E-12	18	1.87E-12	6	1.09	1.04	0.97	
Neutron dpa/s (Fe, ENDF-VI)	1.79E-12	18	1.82E-12	6	1.02	1.71E-12	18	1.86E-12	6	1.09	1.04	0.97	
Gamma dpa/s	1.12E-12	27	1.01E-12	7	0.90	1.01E-12	27	9.98E-13	7	0.99	1.11	1.01	
Gamma flux	4.88E+12	28	4.59E+12	17	0.94	4.64E+12	28	4.61E+12	16	0.99	1.05	1.00	
Neutron + gamma dpa/s	2.91E-12		2.82E-12		0.97	2.72E-12		2.86E-12	4	1.05	1.07	0.99	

[a]Units are $cm^{-2}s^{-1}$ for neutron and gamma-ray fluxes and s^{-1} for dpa/s.
[b]Percent standard deviation. The $\chi 2$ per degree of freedom was 3.774E-01 for the old adjustment and 3.530E-01 for the new adjustment run.
[c]Nickel measured/calculated reaction rate ratios are shown for reference.

Table D.13. Calculated and adjusted irradiation parameters at 2D3W (capsules HRB2-3G and HRB2-3A, position 2; dosimeter sets GD-18 and Al-31; HRB2-3W). New analysis accounts for the changed cobalt content and uses neutron and gamma fluxes from the latest transport calculations (Ref. 18). Values from the old analysis (Ref. 7) are given for comparison

Irradiation parameter	New calculated value ( )[a]	Std.[b] (%)	New adjusted value ( )[a]	Std.[b] (%)	New Adj. / Calc.	Old calculated value ( )[a]	Std.[b] (%)	Old adjusted value ( )[a]	Std.[b] (%)	Old Adj./ Calc.	Calc. New/ Calc. Old	Adj. New\ Adj. Old	New Ni58 (n,p) M/C[c]
Neutron flux (E > 1 MeV)	9.86E+08	19	1.09E+09	6	1.10	9.42E+08	19	1.10E+09	6	1.16	1.05	0.99	1.15
Neutron flux (E > 0.5 MeV)	1.79E+09	19	1.97E+09	7	1.10	1.72E+09	19	1.99E+09	7	1.16	1.04	0.99	1.12
Neutron flux (E > 0.1 MeV)	3.13E+09	19	3.40E+09	8	1.09	3.01E+09	19	3.47E+09	8	1.15	1.04	0.98	
Neutron flux (E < 0.414 eV)	1.14E+10	40	1.23E+10	6	1.08	1.09E+10	40	1.39E+10	6	1.27	1.05	0.89	
Neutron dpa/s (Fe, ASTM)	1.79E-12	18	1.94E-12	6	1.09	1.71E-12	18	1.99E-12	6	1.16	1.04	0.98	
Neutron dpa/s (Fe, ENDF-VI)	1.79E-12	18	1.94E-12	6	1.09	1.71E-12	18	1.99E-12	6	1.16	1.04	0.98	
Gamma dpa/s	1.12E-12	27	1.19E-12	7	1.06	1.01E-12	27	1.18E-12	7	1.17	1.11	1.01	
Gamma flux	4.88E+12	28	5.31E+12	17	1.09	4.64E+12	28	5.33E+12	16	1.15	1.05	1.00	
Neutron + gamma dpa/s	2.91E-12		3.13E-12		1.08	2.72E-12		3.17E-12	4	1.16	1.07	0.99	

[a]Units are $cm^{-2}s^{-1}$ for neutron and gamma-ray fluxes and s^{-1} for dpa/s.
[b]Percent standard deviation. The $\chi 2$ per degree of freedom was 4.559 E-01 for the old adjustment and 6.590E-01 for the new adjustment run.
[c]Nickel measured/calculated reaction rate ratios are shown for reference.

Table D.14. Calculated and adjusted irradiation parameters at Key7 position 5 (capsules DOS1-75, DOS2-75, DOS3-75, DOS4-G-75, and DOS4-75). New analysis uses neutron and gamma fluxes from the latest transport calculations (Ref. 18). Values from the old analysis (Refs. 3, 16) are given for comparison

Loc.	Irradiation parameter	New calculated value ( )[a]	Std.[b] (%)	New adjusted value ( )[a]	Std.[b] (%)	New Adj. / Calc.	Old calculated value ( )[a]	Std.[b] (%)	Old adjusted value ( )[a]	Std.[b] (%)	Old Adj./ Calc.	Calc. New/ Calc. Old	Adj. New\ Adj. Old	New Ni58 (n,p) M/C[c]
D	Neutron flux (E > 1 MeV)	1.87E+08	38	1.58E+08	8	0.85	1.17E+08	38	1.54E+08	8	1.32	1.61	1.03	0.90
D	Neutron flux (E > 0.5 MeV)	2.29E+08	38	1.93E+08	9	0.84								
D	Neutron flux (E > 0.1 MeV)	2.86E+08	37	2.37E+08	11	0.83	1.75E+08	38	2.26E+08	11	1.29	1.63	1.05	
D	Neutron flux (E < 0.414 eV)	8.00E+08	150	2.92E+08	5	0.36	3.97E+08	137	2.84E+08	5	0.72	2.02	1.03	
D	Neutron dpa/s (Fe, ASTM)	2.93E-13	37	2.49E-13	6	0.85	1.82E-13	37	2.41E-13	6	1.32	1.61	1.03	
D	Neutron dpa/s (Fe, ENDF-VI)	2.87E-13	37	2.44E-13	6	0.85								
D	Gamma dpa/s	1.37E-12	45	1.24E-12	14	0.90	1.24E-12	45	1.37E-12	15	1.11	1.10	0.90	
D	Gamma flux	9.22E+12	48	8.46E+12	32	0.92								
D	Neutron + gamma dpa/s	1.66E-12		1.49E-12			1.42E-12		1.61E-12		1.14	1.17	0.92	
A	Neutron flux (E > 1 MeV)	1.87E+08	38	1.61E+08	8	0.86	1.17E+08	38	1.59E+08	8	1.36	1.61	1.02	0.86
A	Neutron flux (E > 0.5 MeV)	2.29E+08	38	1.97E+08	10	0.86								0.95
A	Neutron flux (E > 0.1 MeV)	2.86E+08	37	2.44E+08	11	0.85	1.75E+08	38	2.35E+08	11	1.34	1.63	1.04	0.90
A	Neutron flux (E < 0.414 eV)	8.00E+08	150	2.76E+08	4	0.34	3.97E+08	137	2.88E+08	4	0.73	2.02	0.96	
A	Neutron dpa/s (Fe, ASTM)	2.93E-13	37	2.54E-13	7	0.87	1.82E-13	37	2.49E-13	6	1.37	1.61	1.02	
A	Neutron dpa/s (Fe, ENDF-VI)	2.87E-13	37	2.49E-13	7	0.87								
A	Gamma dpa/s	1.37E-12	45	1.21E-12	31	0.89	1.24E-12	45	1.39E-12	31	1.12	1.10	0.87	
A	Gamma flux	9.22E+12	48	8.45E+12	38	0.92								
A	Neutron + gamma dpa/s	1.66E-12		1.47E-12			1.42E-12		1.64E-12		1.15	1.17	0.90	
B	Neutron flux (E > 1 MeV)	1.87E+08	38	1.62E+08	9	0.87	1.17E+08	38	1.57E+08	8	1.35	1.61	1.04	0.91
B	Neutron flux (E > 0.5 MeV)	2.29E+08	38	1.98E+08	10	0.86								0.90
B	Neutron flux (E > 0.1 MeV)	2.86E+08	37	2.46E+08	12	0.86	1.75E+08	38	2.31E+08	11	1.32	1.63	1.06	
B	Neutron flux (E < 0.414 eV)	8.00E+08	150	2.75E+08	5	0.34	3.97E+08	137	2.77E+08	5	0.70	2.02	0.99	
B	Neutron dpa/s (Fe, ASTM)	2.93E-13	37	2.56E-13	7	0.87	1.82E-13	37	2.45E-13	7	1.35	1.61	1.05	
B	Neutron dpa/s (Fe, ENDF-VI)	2.87E-13	37	2.51E-13	7	0.87								
B	Gamma dpa/s	1.37E-12	45	1.19E-12	8	0.87	1.24E-12	45	1.30E-12	8	1.05	1.10	0.91	
B	Gamma flux	9.22E+12	48	8.30E+12	27	0.90								
B	Neutron + gamma dpa/s	1.66E-12		1.44E-12			1.42E-12		1.55E-12		1.09	1.17	0.93	

Table D.14. Calculated and adjusted irradiation parameters at Key7 position 5 (capsules DOS1-75, DOS2-75, DOS3-75, DOS4-G-75, and DOS4-75) (continued). New analysis uses neutron and gamma fluxes from the latest transport calculations (Ref. 18). Values from the old analysis (Refs. 3, 16) are given for comparison

Loc.	Irradiation parameter	New calculated value ( )[a]	Std.[b] (%)	New adjusted value ( )[a]	Std.[b] (%)	New Adj. / Calc.	Old calculated value ( )[a]	Std.[b] (%)	Old adjusted value ( )[a]	Std.[b] (%)	Old Adj./ Calc.	Calc. New/ Calc. Old	Adj. New\ Adj. Old	New Ni58 (n,p) M/C[c]
J	Neutron flux (E > 1 MeV)	1.87E+08	38	1.62E+08	9	0.86	1.17E+08	38	1.57E+08	8	1.35	1.61	1.03	0.90
J	Neutron flux (E > 0.5 MeV)	2.29E+08	38	1.97E+08	10	0.86								0.91
J	Neutron flux (E > 0.1 MeV)	2.86E+08	37	2.44E+08	12	0.85	1.75E+08	38	2.32E+08	11	1.33	1.63	1.05	
J	Neutron flux (E < 0.414 eV)	8.00E+08	150	2.63E+08	6	0.33	3.97E+08	137	2.70E+08	6	0.68	2.02	0.97	
J	Neutron dpa/s (Fe, ASTM)	2.93E-13	37	2.54E-13	7	0.87	1.82E-13	37	2.46E-13	7	1.35	1.61	1.03	
J	Neutron dpa/s (Fe, ENDF-VI)	2.87E-13	37	2.48E-13	7	0.87								
J	Gamma dpa/s[d]	1.37E-12	45	1.14E-12	7	0.83	1.24E-12	45	1.21E-12	7	0.97	1.10	0.95	
J	Gamma flux	9.22E+12	48	8.19E+12	25	0.89								
J	Neutron + gamma dpa/s	1.66E-12		1.40E-12			1.42E-12		1.45E-12		1.02	1.17	0.96	

NOTE: Dosimeter locations within older style dosimetry capsules are depicted in drawing M-11511-OH-001-E-R1; location J is at the center of these capsules.

[a]Units are $cm^{-2}s^{-1}$ for neutron and gamma-ray fluxes and s^{-1} for dpa/s.

[b]Percent standard deviation. The $\chi 2$ per degree of freedom was 7.144 E-01 for the old adjustment and 7.356E-01 for the new adjustment run.

[c]Nickel measured/calculated reaction rate ratios are shown for reference.

[d]The ratio of adjusted to calculated gamma-induced dpa rate is 0.832. This value is used in normalization of calculated gamma-induced dpa rates for Key 6 surveillance capsules instead of the previous value 0.847 reported in Ref. 10.

Table D.15. Calculated and adjusted irradiation parameters at Key2 position 9 (capsules DOS2-29 and DOS3-29). New analysis uses neutron and gamma fluxes from the latest transport calculations (Ref. 18). Values from the old analysis (Refs. 3, 16) are given for comparison

Loc.	Irradiation parameter	New calculated value ( )[a]	Std.[b] (%)	New adjusted value ( )[a]	Std.[b] (%)	New Adj. / Calc.	Old calculated value ( )[a]	Std.[b] (%)	Old adjusted value ( )[a]	Std.[b] (%)	Old Adj./ Calc.	Calc. New/ Calc. Old	Adj. New\ Adj. Old	New Ni58 (n,p) M/C[c]
D	Neutron flux (E > 1 MeV)	1.99E+09	39	1.24E+09	9	0.62	5.67E+08	48	8.96E+08	9	1.58	3.51	1.39	
D	Neutron flux (E > 0.5 MeV)	3.10E+09	39	1.94E+09	10	0.63								
D	Neutron flux (E > 0.1 MeV)	4.61E+09	38	2.92E+09	12	0.63	9.79E+08	47	1.53E+09	13	1.56	4.71	1.91	
D	Neutron flux (E < 0.414 eV)	1.50E+10	150	9.72E+09	5	0.65	1.67E+10	139	9.46E+09	5	0.57	0.90	1.03	
D	Neutron dpa/s (Fe, ASTM)	3.03E-12	37	1.96E-12	8	0.65	9.72E-13	47	1.35E-12	7	1.39	3.12	1.45	
D	Neutron dpa/s (Fe, ENDF-VI)	3.01E-12	37	1.95E-12	8	0.65								
D	Gamma dpa/s	1.28E-12	45	1.22E-12	28	0.95	2.36E-12	45	2.40E-12	41	1.02	0.54	0.51	
D	Neutron + gamma dpa/s	4.32E-12		3.19E-12		0.74	3.33E-12		3.75E-12		1.13	1.30	0.85	
D	Gamma flux	4.63E+12	47	4.49E+12	41	0.97	2.81E+13	48	2.84E+13	47	1.01	0.17	0.16	
A	Neutron flux (E > 1 MeV)	1.99E+09	39	2.31E+09	10	1.16	5.67E+08	48	1.66E+09	12	2.93	3.51	1.39	1.34
A	Neutron flux (E > 0.5 MeV)	3.10E+09	39	3.57E+09	11	1.15								1.33
A	Neutron flux (E > 0.1 MeV)	4.61E+09	38	5.33E+09	13	1.16	9.79E+08	47	2.82E+09	16	2.88	4.71	1.89	
A	Neutron flux (E < 0.414 eV)	1.50E+10	150	3.00E+10	7	2.00	1.67E+10	139	3.25E+10	6	1.94	0.90	0.93	
A	Neutron dpa/s (Fe, ASTM)	3.03E-12	37	3.75E-12	9	1.24	9.72E-13	47	2.70E-12	8	2.78	3.12	1.39	
A	Neutron dpa/s (Fe, ENDF-VI)	3.01E-12	37	3.71E-12	9	1.23								
A	Gamma dpa/s	1.28E-12	45	1.22E-12	28	0.95	2.36E-12	45	2.40E-12	41	1.02	0.54	0.51	
A	Neutron + gamma dpa/s	4.32E-12		4.97E-12		1.15	3.33E-12		5.10E-12		1.53	1.30	0.98	
A	Gamma flux	4.63E+12	47	4.49E+12	41	0.97	2.81E+13	48	2.84E+13	47	1.01	0.17	0.16	
B	Neutron flux (E > 1 MeV)	1.99E+09	39	1.77E+09	18	0.89	5.67E+08	48	9.64E+08	40	1.70	3.51	1.84	
B	Neutron flux (E > 0.5 MeV)	3.10E+09	39	2.76E+09	18	0.89								
B	Neutron flux (E > 0.1 MeV)	4.61E+09	38	4.14E+09	19	0.90	9.79E+08	47	1.65E+09	40	1.69	4.71	2.51	
B	Neutron flux (E < 0.414 eV)	1.50E+10	150	2.87E+10	48	1.91	1.67E+10	139	1.95E+10	68	1.17	0.90	1.47	
B	Neutron dpa/s (Fe, ASTM)	3.03E-12	37	2.94E-12	16	0.97	9.72E-13	47	1.56E-12	33	1.61	3.12	1.88	
B	Neutron dpa/s (Fe, ENDF-VI)	3.01E-12	37	2.90E-12	16	0.97								
B	Gamma dpa/s	1.28E-12	45	1.36E-12	18	1.06	2.36E-12	45	2.71E-12	20	1.15	0.54	0.50	
B	Neutron + gamma dpa/s	4.32E-12		4.30E-12		1.00	3.33E-12		4.28E-12		1.28	1.30	1.01	
B	Gamma flux	4.63E+12	47	4.82E+12	38	1.04	2.81E+13	48	3.08E+13	40	1.10	0.17	0.16	

Table D.15. Calculated and adjusted irradiation parameters at Key2 position 9 (capsules DOS2-29 and DOS3-29) (continued). New analysis uses neutron and gamma fluxes from the latest transport calculations (Ref. 18). Values from the old analysis (Refs. 3, 16) are given for comparison

Loc.	Irradiation parameter	New calculated value ( )[a]	Std.[b] (%)	New adjusted value ( )[a]	Std.[b] (%)	New Adj. / Calc.	Old calculated value ( )[a]	Std.[b] (%)	Old adjusted value ( )[a]	Std.[b] (%)	Old Adj./ Calc.	Calc. New/ Calc. Old	Adj. New\ Adj. Old	New Ni58 (n,p) M/C[c]
J	Neutron flux (E > 1 MeV)	1.99E+09	39	1.67E+09	10	0.84	5.67E+08	48	1.18E+09	12	2.08	3.51	1.42	0.96
J	Neutron flux (E > 0.5 MeV)	3.10E+09	39	2.60E+09	12	0.84								0.92
J	Neutron flux (E > 0.1 MeV)	4.61E+09	38	3.88E+09	13	0.84	9.79E+08	47	2.02E+09	16	2.06	4.71	1.93	
J	Neutron flux (E < 0.414 eV)	1.50E+10	150	1.51E+10	7	1.01	1.67E+10	139	1.61E+10	6	0.96	0.90	0.94	
J	Neutron dpa/s (Fe, ASTM)	3.03E-12	37	2.63E-12	9	0.87	9.72E-13	47	1.84E-12	8	1.89	3.12	1.43	
J	Neutron dpa/s (Fe, ENDF-VI)	3.01E-12	37	2.60E-12	9	0.87								
J	Gamma dpa/s	1.28E-12	45	1.09E-12	18	0.85	2.36E-12	45	2.17E-12	20	0.92	0.54	0.50	
J	Neutron + gamma dpa/s	4.32E-12		3.71E-12		0.86	3.33E-12		4.01E-12		1.20	1.30	0.92	
J	Gamma flux	4.63E+12	47	4.14E+12	38	0.89	2.81E+13	48	2.66E+13	40	0.95	0.17	0.16	

NOTE: Dosimeter locations within older style dosimetry capsules are depicted in drawing M-11511-OH-001-E-R1; location J is at the center of these capsules.
[a]Units are $cm^{-2}s^{-1}$ for neutron and gamma-ray fluxes and s^{-1} for dpa/s.
[b]Percent standard deviation. The $\chi 2$ per degree of freedom was 8.778 E-01 for the old adjustment and 1.053 for the new adjustment run.
[c]Nickel measured/calculated reaction rate ratios are shown for reference.

Table D.16. Calculated and adjusted irradiation parameters at Key4 position 2 (capsules DOS2-42 and DOS3-42). New analysis uses neutron and gamma fluxes from the latest transport calculations (Ref. 18). Values from the old analysis (Refs. 3, 16) are given for comparison

Loc.	Irradiation parameter	New calculated value ( )[a]	Std.[b] (%)	New adjusted value ( )[a]	Std.[b] (%)	New Adj. / Calc.	Old calculated value ( )[a]	Std.[b] (%)	Old adjusted value ( )[a]	Std.[b] (%)	Old Adj./ Calc.	Calc. New/ Calc. Old	Adj. New\ Adj. Old	New Ni58 (n,p) M/C[c]
D	Neutron flux (E > 1 MeV)	5.34E+08	39	3.70E+08	9	0.69	2.47E+08	48	2.56E+08	10	1.04	2.17	1.45	
D	Neutron flux (E > 0.5 MeV)	9.37E+08	39	6.59E+08	11	0.70								
D	Neutron flux (E > 0.1 MeV)	1.59E+09	38	1.15E+09	13	0.72	4.96E+08	47	5.22E+08	15	1.05	3.21	2.21	
D	Neutron flux (E < 0.414 eV)	1.66E+10	150	9.88E+09	5	0.60	3.12E+10	139	1.01E+10	5	0.32	0.53	0.98	
D	Neutron dpa/s (Fe, ASTM)	1.01E-12	41	7.34E-13	8	0.72	6.46E-13	70	4.59E-13	5	0.71	1.57	1.60	
D	Neutron dpa/s (Fe, ENDF-VI)	1.00E-12	40	7.29E-13	8	0.73								
D	Gamma dpa/s	1.10E-12	45	1.11E-12	25	1.01	1.06E-12	45	1.22E-12	40	1.15	1.04	0.91	
D	Neutron + gamma dpa/s	2.12E-12		1.84E-12		0.87	1.71E-12		1.68E-12		0.99	1.24	1.10	
D	Gamma flux	4.13E+12	47	4.40E+12	34	1.07	1.13E+13	48	1.10E+13	45	0.97	0.36	0.40	
A	Neutron flux (E > 1 MeV)	5.34E+08	39	6.00E+08	10	1.12	2.47E+08	48	4.16E+08	12	1.69	2.17	1.44	1.20
A	Neutron flux (E > 0.5 MeV)	9.37E+08	39	1.06E+09	12	1.13								1.23
A	Neutron flux (E > 0.1 MeV)	1.59E+09	38	1.89E+09	14	1.19	4.96E+08	47	8.63E+08	17	1.74	3.21	2.19	
A	Neutron flux (E < 0.414 eV)	1.66E+10	150	6.33E+10	6	3.82	3.12E+10	139	7.23E+10	6	2.31	0.53	0.88	
A	Neutron dpa/s (Fe, ASTM)	1.01E-12	41	1.72E-12	8	1.70	6.46E-13	70	1.27E-12	7	1.97	1.57	1.35	
A	Neutron dpa/s (Fe, ENDF-VI)	1.00E-12	40	1.68E-12	9	1.67								
A	Gamma dpa/s	1.10E-12	45	1.11E-12	25	1.01	1.06E-12	45	1.22E-12	40	1.15	1.04	0.91	
A	Neutron + gamma dpa/s	2.12E-12		2.83E-12		1.34	1.71E-12		2.50E-12		1.46	1.24	1.13	
A	Gamma flux	4.13E+12	47	4.40E+12	34	1.07	1.13E+13	48	1.10E+13	45	0.97	0.36	0.40	
B	Neutron flux (E > 1 MeV)	5.34E+08	39	5.27E+08	20	0.99	2.47E+08	48	3.79E+08	40	1.54	2.17	1.39	
B	Neutron flux (E > 0.5 MeV)	9.37E+08	39	9.37E+08	21	1.00								
B	Neutron flux (E > 0.1 MeV)	1.59E+09	38	1.66E+09	21	1.04	4.96E+08	47	7.81E+08	40	1.57	3.21	2.12	
B	Neutron flux (E < 0.414 eV)	1.66E+10	150	5.40E+10	41	3.25	3.12E+10	139	3.36E+10	63	1.08	0.53	1.61	
B	Neutron dpa/s (Fe, ASTM)	1.01E-12	41	1.45E-12	17	1.43	6.46E-13	70	8.56E-13	34	1.33	1.57	1.69	
B	Neutron dpa/s (Fe, ENDF-VI)	1.00E-12	40	1.41E-12	17	1.41								
B	Gamma dpa/s	1.10E-12	45	1.09E-12	12	0.99	1.06E-12	45	1.48E-12	19	1.39	1.04	0.74	
B	Neutron + gamma dpa/s	2.12E-12		2.54E-12		1.20	1.71E-12		2.33E-12		1.37	1.24	1.09	
B	Gamma flux	4.13E+12	47	4.35E+12	31	1.05	1.13E+13	48	1.24E+13	38	1.10	0.36	0.35	

Table D.16. Calculated and adjusted irradiation parameters at Key4 position 2 (capsules DOS2-42 and DOS3-42) (continued). New analysis uses neutron and gamma fluxes from the latest transport calculations (Ref. 18). Values from the old analysis (Refs. 3, 16) are given for comparison

Loc.	Irradiation parameter	New calculated value ( )[a]	Std.[b] (%)	New adjusted value ( )[a]	Std.[b] (%)	New Adj. / Calc.	Old calculated value ( )[a]	Std.[b] (%)	Old adjusted value ( )[a]	Std.[b] (%)	Old Adj./ Calc.	Calc. New/ Calc. Old	Adj. New\ Adj. Old	New Ni58 (n,p) M/C[c]
J	Neutron flux (E > 1 MeV)	5.34E+08	39	4.51E+08	11	0.85	2.47E+08	48	3.08E+08	13	1.25	2.17	1.47	0.91
J	Neutron flux (E > 0.5 MeV)	9.37E+08	39	8.02E+08	13	0.86								0.89
J	Neutron flux (E > 0.1 MeV)	1.59E+09	38	1.40E+09	14	0.88	4.96E+08	47	6.37E+08	17	1.28	3.21	2.20	
J	Neutron flux (E < 0.414 eV)	1.66E+10	150	1.96E+10	6	1.18	3.12E+10	139	2.33E+10	6	0.75	0.53	0.84	
J	Neutron dpa/s (Fe, ASTM)	1.01E-12	41	9.65E-13	9	0.95	6.46E-13	70	6.62E-13	7	1.03	1.57	1.46	
J	Neutron dpa/s (Fe, ENDF-VI)	1.00E-12	40	9.53E-13	9	0.95								
J	Gamma dpa/s	1.10E-12	45	1.13E-12	9	1.03	1.06E-12	45	1.29E-12	9	1.22	1.04	0.88	
J	Neutron + gamma dpa/s	2.12E-12		2.10E-12		0.99	1.71E-12		1.95E-12		1.14	1.24	1.07	
J	Gamma flux	4.13E+12	47	4.51E+12	25	1.09	1.13E+13	48	9.31E+12	27	0.82	0.36	0.48	

NOTE: Dosimeter locations within older style dosimetry capsules are depicted in drawing M-11511-OH-001-E-R1; location J is at the center of these capsules.
[a]Units are $cm^{-2}s^{-1}$ for neutron and gamma-ray fluxes and s^{-1} for dpa/s.
[b]Percent standard deviation. The $\chi 2$ per degree of freedom was 1.200 for the old adjustment and 8.686E-01 for the new adjustment run.
[c]Nickel measured/calculated reaction rate ratios are shown for reference.

Table D.17. Calculated and adjusted irradiation parameters at Key4 position 10 (capsules DOS2-410 and DOS3-410). New analysis uses neutron and gamma fluxes from the latest transport calculations (Ref. 18). Values from the old analysis (Refs. 3, 16) are given for comparison

Loc.	Irradiation parameter	New calculated value ( )[a]	Std.[b] (%)	New adjusted value ( )[a]	Std.[b] (%)	New Adj. / Calc.	Old calculated value ( )[a]	Std.[b] (%)	Old adjusted value ( )[a]	Std.[b] (%)	Old Adj./ Calc.	Calc. New/ Calc. Old	Adj. New\ Adj. Old	New Ni58 (n,p) M/C[c]
D	Neutron flux (E > 1 MeV)	8.50E+08	39	4.86E+08	9	0.57	3.97E+08	48	3.22E+08	10	0.81	2.14	1.51	
D	Neutron flux (E > 0.5 MeV)	1.50E+09	39	8.73E+08	11	0.58								
D	Neutron flux (E > 0.1 MeV)	2.54E+09	38	1.53E+09	13	0.60	7.56E+08	47	6.34E+08	15	0.84	3.37	2.42	
D	Neutron flux (E < 0.414 eV)	1.89E+10	150	1.10E+10	5	0.58	3.26E+10	139	1.12E+10	5	0.34	0.58	0.98	
D	Neutron dpa/s (Fe, ASTM)	1.56E-12	39	9.41E-13	8	0.60	8.94E-13	59	5.68E-13	6	0.64	1.74	1.65	
D	Neutron dpa/s (Fe, ENDF-VI)	1.55E-12	39	9.35E-13	8	0.60								
D	Gamma dpa/s	8.99E-13	45	7.62E-13	26	0.85	9.08E-13	45	9.66E-13	40	1.06	0.99	0.79	
D	Neutron + gamma dpa/s	2.456E-12		1.70E-12		0.69	1.80E-12		1.53E-12		0.85	1.36	1.11	
D	Gamma flux	3.63E+12	47	2.70E+12	35	0.74	9.42E+12	48	7.69E+12	45	0.82	0.39	0.35	
A	Neutron flux (E > 1 MeV)	8.50E+08	39	9.25E+08	10	1.09	3.97E+08	48	5.83E+08	12	1.47	2.14	1.59	1.16
A	Neutron flux (E > 0.5 MeV)	1.50E+09	39	1.65E+09	12	1.10								1.17
A	Neutron flux (E > 0.1 MeV)	2.54E+09	38	2.90E+09	14	1.14	7.56E+08	47	1.16E+09	17	1.53	3.37	2.51	
A	Neutron flux (E < 0.414 eV)	1.89E+10	150	7.25E+10	7	3.84	3.26E+10	139	8.03E+10	6	2.47	0.58	0.90	
A	Neutron dpa/s (Fe, ASTM)	1.56E-12	39	2.34E-12	9	1.50	8.94E-13	59	1.62E-12	7	1.81	1.74	1.45	
A	Neutron dpa/s (Fe, ENDF-VI)	1.55E-12	39	2.29E-12	9	1.48								
A	Gamma dpa/s	8.99E-13	45	7.62E-13	26	0.85	9.08E-13	45	9.66E-13	40	1.06	0.99	0.79	
A	Neutron + gamma dpa/s	2.456E-12		3.10E-12		1.26	1.80E-12		2.58E-12		1.43	1.36	1.20	
A	Gamma flux	3.63E+12	47	2.70E+12	35	0.74	9.42E+12	48	7.69E+12	45	0.82	0.39	0.35	
B	Neutron flux (E > 1 MeV)	8.50E+08	39	7.65E+08	19	0.90	3.97E+08	48	5.25E+08	38	1.32	2.14	1.46	
B	Neutron flux (E > 0.5 MeV)	1.50E+09	39	1.37E+09	20	0.92								
B	Neutron flux (E > 0.1 MeV)	2.54E+09	38	2.41E+09	20	0.95	7.56E+08	47	1.03E+09	38	1.36	3.37	2.34	
B	Neutron flux (E < 0.414 eV)	1.89E+10	150	5.11E+10	47	2.70	3.26E+10	139	3.30E+10	65	1.01	0.58	1.55	
B	Neutron dpa/s (Fe, ASTM)	1.56E-12	39	1.82E-12	16	1.17	8.94E-13	59	1.08E-12	32	1.21	1.74	1.69	
B	Neutron dpa/s (Fe, ENDF-VI)	1.55E-12	39	1.79E-12	17	1.15								
B	Gamma dpa/s	8.99E-13	45	8.33E-13	14	0.93	9.08E-13	45	1.30E-12	20	1.43	0.99	0.64	
B	Neutron + gamma dpa/s	2.456E-12		2.65E-12		1.08	1.80E-12		2.38E-12		1.32	1.36	1.12	
B	Gamma flux	3.63E+12	47	2.87E+12	32	0.79	9.42E+12	48	9.31E+12	39	0.99	0.39	0.31	

Table D.17. Calculated and adjusted irradiation parameters at Key4 position 10 (capsules DOS2-410 and DOS3-410) (continued). New analysis uses neutron and gamma fluxes from the latest transport calculations (Ref. 18). Values from the old analysis (Refs. 3, 16) are given for comparison

Loc.	Irradiation parameter	New calculated value ( )[a]	Std.[b] (%)	New adjusted value ( )[a]	Std.[b] (%)	New Adj. / Calc.	Old calculated value ( )[a]	Std.[b] (%)	Old adjusted value ( )[a]	Std.[b] (%)	Old Adj./ Calc.	Calc. New/ Calc. Old	Adj. New\ Adj. Old	New Ni58 (n,p) M/C[c]
J	Neutron flux (E > 1 MeV)	8.50E+08	39	6.67E+08	11	0.78	3.97E+08	48	4.19E+08	12	1.06	2.14	1.59	0.84
J	Neutron flux (E > 0.5 MeV)	1.50E+09	39	1.20E+09	13	0.80								0.79
J	Neutron flux (E > 0.1 MeV)	2.54E+09	38	2.09E+09	14	0.82	7.56E+08	47	8.41E+08	17	1.11	3.37	2.48	
J	Neutron flux (E < 0.414 eV)	1.89E+10	150	2.39E+10	7	1.26	3.26E+10	139	2.75E+10	6	0.84	0.58	0.87	
J	Neutron dpa/s (Fe, ASTM)	1.56E-12	39	1.36E-12	9	0.87	8.94E-13	59	8.76E-13	7	0.98	1.74	1.55	
J	Neutron dpa/s (Fe, ENDF-VI)	1.55E-12	39	1.35E-12	10	0.87								
J	Gamma dpa/s	8.99E-13	45	6.69E-13	10	0.74	9.08E-13	45	8.44E-13	10	0.93	0.99	0.79	
J	Neutron + gamma dpa/s	2.456E-12		2.03E-12		0.83	1.80E-12		1.72E-12		0.95	1.36	1.18	
J	Gamma flux	3.63E+12	47	2.37E+12	27	0.65	9.42E+12	48	4.72E+12	28	0.50	0.39	0.50	

NOTE: Dosimeter locations within older style dosimetry capsules are depicted in drawing M-11511-OH-001-E-R1; location J is at the center of these capsules.
[a]Units are $cm^{-2}s^{-1}$ for neutron and gamma-ray fluxes and s^{-1} for dpa/s.
[b]Percent standard deviation. The $\chi 2$ per degree of freedom was 1.258 for the old adjustment and 9.267E-01 for the new adjustment run.
[c]Nickel measured/calculated reaction rate ratios are shown for reference.

APPENDIX E

SOURCE OF THE DPA(N) AND DPA(γ) VALUES CORRESPONDING TO THE HFIR VESSEL SURVEILLANCE DATA

E.1 INTRODUCTION

Appendix E is an update of Appendix B in ORNL/TM-2008/007 [30]. The update was necessary because of an update in all of the dosimetry data from HFIR dosimetry-dedicated capsules through 2004. The updated dosimetry and dosimetry from dosimetry-dedicated capsules removed from HFIR in 2008 are included in Table E.1. That table also includes the corresponding calculated values of dpa rates and the corresponding M/C values, which are used in ORNL/TM-02011/158 for normalizing calculated values of dpa rates at critical locations where dosimeters could not be placed. Additional information regarding the dosimetry capsules is included in Table B.1 of [6] (ORNL/TM-1372/S2).

A detailed description of Table E.1 follows. The first three columns of Table E.1 list the year the capsule was withdrawn, the capsule ID, and the location (the Key and the position in the Key) of the capsule irradiation in HFIR. The next four columns list "measured" neutron and gamma dpa rates as obtained from the adjustment of the calculated values with measured reaction rates, from the present analysis and from the previous analyses. The following two columns list the neutron and gamma dpa rates obtained from the latest transport calculations, as reported in Table C.7 of [18] (TM-13693/S2).
All dpa rates are normalized to a reactor power of 100 MW. Values in the column labeled "New analysis adjusted values" are taken from Tables 8 and 9 of this report, where the values are normalized to 85 MW, and scaled up to a reactor power of 100 MW. The last four columns list ratios of the adjusted and calculated dpa rates for the neutrons and gamma rays for the present and previous analyses.

The ratios of the adjusted-to-calculated values are used to calculate normalization factors that are applied to the calculated dpa rate values at critical locations in the vessel wall (where measurements are not possible) to improve their accuracy and, thus, the accuracy of the vessel-integrity evaluation. For the capsules in Key K2C/2W, the ratios of the adjusted and calculated dpa rates are not listed in Table E.1. The reason for this is that the calculated values are for K2C/2W concentric ("axisymmetric") with the beam tube while K2C/2W is in fact offset in the vertical direction and somewhat to the right with respect to the center of the beam tube. This offset is relatively small; however, it is significant in terms of dpa rate values and needs to be accounted for to determine meaningful ratios of the adjusted and calculated dpa rates for K2C/2W. The differences in the measured reaction rates at presumably symmetric locations in K2C/2W were originally observed in the first round of dosimetry measurements in K2C/2W [see Ref. 7] and were addressed in Ref. 28. More recently an attempt was made to measure the specified nominal 0.5-in. annular gap between the outer surface of the beam tube and inner surface of K2C/2W [31]. These

measurements indicated that K2C/2W was offset up and to the right, along a 45° line by ~ 0.25 in. [32]. Finally, a detailed analysis of the measurements around K2C/2W was performed, which determined the offset to be ~0.30 in. up and to the right at an ~18° line to the vertical direction. This analysis and the corrected dpa rate M/C values are given in ORNL/TM-2011/158 [30].

Table E.2 contains a summary of all updated "measured" values of $dpa(n)$ and $dpa(\gamma)$ corresponding to the "measured" values of the radiation-induced increase in the nil-ductility transition temperature (ΔNDTT) obtained from the HFIR vessel materials surveillance program.[*,†] The HFIR vessel embrittlement trend curve [ΔNDTT vs dpa (n+γ)] is constructed using these data and has been updated in ORNL/TM-2011/158 because of the aforementioned update in the dosimetry data.

For each group of capsules used to determine a single "measured" data point (ΔNDTT, dpa), the following information is included in Table E.2: the capsule ID; the year when the capsule was removed from HFIR; material of the Charpy specimens; the zero-dpa value of NDTT ($NDTT_O$); the average neutron and gamma dpa values for the group of capsules; and the total dpa value, dpa(n+γ), which, as indicated previously, is now used as the independent variable in ORNL/TM-2011/158 for the HFIR vessel materials embrittlement trend curve.

Tables E.3−E.5 repeat the dpa values given in Table E.2 and provide—in parentheses—the values from the previous analyses, as reported in [10] (ORNL/TM-2008/007). In addition, the locations in HFIR where capsules were irradiated (Key and position in Key) and the irradiation time in EFPYs at a reactor power of 100 MW are also listed.

The determinations of the dpa values included in Tables E.2−E.5 are discussed subsequently.

*R. K. Nanstad and M. A. Sokolov, *Final Report, 2009 Charpy Input Test Results for HFIR Surveillance Program*, to Kevin Smith and Henry Kmieciak, ORNL, March 28, 2010.
†R. D. Cheverton at al., *Impact of 2008/2009 Dosimetry and Surveillance Data on the HFIR Vessel Radiation Embrittlement Trend Curve, Hydrostatic Proof Test Conditions, Pressure/Temperature Limits, and Life Extension*, ORNL/TM-2011/158, Oak Ridge Nat. Lab., December 2013.

Table E.1. Adjusted and calculated dpa rates (at 100 MW) and M/C values for all HFIR vessel dosimetry-dedicated capsules removed through 2008

With-drawn (year)	Capsule ID	Location	New analysis adjusted values		Previous analyses adjusted values		Calculated values[a]		New Adj./Calc.		Old Adj./Calc.	
			dpa(n)/s	dpa(γ)/s	dpa(n)/s	dpa(γ)/s	dpa(n)/s	dpa(γ)/s	dpa(n)/s	dpa(γ)/s	dpa(n)/s	dpa (γ)/s
			(s^{-1})	(s^{-1})	(s^{-1})	(s^{-1})	(s^{-1})	(s^{-1})				
1993	**Note 1**	K2, P9	3.09E-12	1.28E-12	2.22E-12	2.55E-12	3.82E-12	1.52E-12	0.809	0.840	0.581	1.678
2004	DOS-1	K2W, P8	4.71E-12	2.71E-12	4.82E-12	2.72E-12	4.36E-12	2.59E-12				
2004	DOS-2	K2W, P32	5.02E-12	2.18E-12	5.13E-12	2.16E-12	4.36E-12	2.59E-12				
2004	DOS-8	K2C, P1	1.99E-10	1.14E-11	2.04E-10	1.14E-11	1.55E-10	1.02E-11				
2004	DOS-9	K2C, P4	1.94E-10	1.26E-11	1.99E-10	1.22E-11	1.55E-10	1.02E-11				
2008	DOS-7	K2C, P9	2.75E-10	1.83E-11	2.74E-10	1.84E-11	1.55E-10	1.02E-11	**Note 5**			
2008	DOS-13	K2C, P13	2.69E-10	1.66E-11	2.69E-10	1.66E-11	1.55E-10	1.02E-11				
2004	HRB2-1G,1A	K2C, P2D1C	5.00E-11	7.95E-12	5.27E-11	7.21E-12	7.58E-11	3.60E-12				
2004	HRB2-2G,2A	K2C, P2D2C	7.14E-11	4.05E-12	7.34E-11	3.80E-12	7.58E-11	3.60E-12				
2004	HRB2-1G,-1A	K2W, P2D1W	1.95E-12	1.15E-12	2.01E-12	1.14E-12	2.10E-12	1.31E-12				
2004	HRB2-2G,-2A	K2W, P2D2W	2.14E-12	1.18E-12	2.20E-12	1.17E-12	2.10E-12	1.31E-12				
2004	HRB2-3G,-3A	K2W, P2D3W	2.28E-12	1.40E-12	2.34E-12	1.39E-12	2.10E-12	1.31E-12				
2004	DOS-3	K3P3	2.49E-12	1.64E-12	2.53E-12	1.62E-12	2.60E-12	1.26E-12	0.956	1.299	0.973	1.286
2004	DOS-4	K3 P8	5.11E-12	1.23E-12	5.15E-12	1.24E-12	4.40E-12	1.16E-12	1.161	1.061	1.170	1.069
2004	DOS-5	K3 P10	3.63E-12	1.11E-12	3.72E-12	1.11E-12	3.55E-12	1.19E-12	1.022	0.930	1.048	0.933
1993	**Note 2**	K4 P2	1.13E-12	1.33E-12	7.84E-13	1.52E-12	1.27E-12	1.30E-12	0.894	1.024	0.617	1.169
1993	**Note 3**	K4 P10	1.60E-12	7.87E-13	1.01E-12	9.90E-13	1.81E-12	1.06E-12	0.885	0.743	0.558	0.934
2008	DOS-10	K4 P3	1.25E-11	3.78E-12	1.25E-11	3.79E-12	1.39E-11	4.01E-12	0.901	0.943	0.899	0.945
2008	DOS-11	K4 P8	1.81E-11	4.24E-12	1.81E-11	4.24E-12	2.03E-11	3.71E-12	0.892	1.142	0.892	1.143
2008	DOS-12	K4 P10	1.41E-11	3.48E-12	1.41E-11	3.48E-12	1.81E-11	3.81E-12	0.778	0.912	0.779	0.913
2008	HRB4-1G,-1A	K4, P4D1	1.33E-11	2.77E-12	1.33E-11	2.78E-12	2.01E-11[b]	2.34E-12[b]	0.661	1.184	0.662	1.188
2008	HRB4-2G,-2A	K4, P4D2	1.26E-11	2.84E-12	1.26E-11	2.84E-12	1.58E-11[b]	1.68E-12[b]	0.799	1.690	0.797	1.690
2008	HRB4-3G, -3A	K4, P4D3	8.53E-12	1.90E-12	8.53E-12	1.89E-12	1.35E-11[b]	1.46E-12[b]	0.632	1.299	0.632	1.295
2004	DOS-6	K7 P1	1.38E-13	1.13E-12	1.34E-13	1.17E-12	2.61E-13	1.93E-12	**Note 6**			
1993	**Note 4**	K7 P5	2.99E-13	1.34E-12	2.79E-13	1.44E-12	3.72E-13	1.70E-12	0.803	0.791	0.750	0.847

Note 1: Capsules DOS2-29 and DOS3-29. **Note 2:** Capsules DOS2-42 and DOS3-42. **Note 3**: Capsules DOS2-410 and DOS3-410. **Note 4:** Capsules DOS1-75, DOS2-75, DOS3-75, DOS4-G-75, and DOS4-75. **Note 5:** Key K2C/2W is offset from concentric position; Adj. values are for the offset positions. The Calc. values are for concentric positions; therefore Adj./Calc. is not relevant for normalization purposes. See ORNL/TM-2011/158 [30]. **Note 6**: During the irrad. of DOS-6 the HR-4 beam tube was not installed; Adj./Calc. values are not relevant.

[a]Calculated values from Table C.7 in ORNL/TM-13693/S2; the values are for the K2C/2W position concentric with the beam tube.

[b]Calculated values from fax from E. D. Blakeman to R. D. Cheverton, dated 2-17-2012; the values are for the K2C/2W position concentric with the beam tube.

Table E.2. Summary of "measured" values of dpa for HFIR vessel materials through year 2009

Capsule	Year removed from HFIR	$NDTT_O$ (°F)	dpa × 10^4 "Measured"		dpa × 10^4 (n + γ)
			n	γ	
A350LF3					
HB-2-10, -13 HB-3-49, -53	1969	–110 –80	2.28 2.32	0.943 0.840	3.22 3.16
HB-2-12, -15 HB-3-45, -52	1974	–110 –80	6.28 7.11	2.60 2.84	8.88 9.95
HB-2-14 HB-3-43	1983	–110 –80	14.6 11.6	6.05 7.71	20.7 19.3
HB-2-9, -11 HB-3-42, -48, -50	1986	–110 –80	17.1 18.6	7.07 8.25	24.2 26.9
HB-2-8, -17, -18	2005	–110	92.0	13.2	105
HB-2C-1, -2, -3 HB-3-41, -46	2009	–110 –80	180 175	12.0 18.2	192 193
A350FL3 Half-Sized CVN Specimens					
HB-2C-10, -11	2009	–110	158	9.46	167
A105II					
HB-1-19, -21 HB-4-36, -37	1969	–80	1.02	0.758	1.78
HB-1-20, -26 HB-4-30, -33	1974	–80	3.21	2.10	5.31
HB-1-27 HB-4-40	1983	–80	7.47	4.90	12.4
HB-1-25 HB-4-31, -33	1986	–80	10.1	5.15	15.3
A212B (LT)					
HB-1A-61 HB-4A-72	1983	–5	1.84	6.86	8.70
HB-1A-68, -69 HB-4A-73, -77	1986	–5	1.95	7.84	9.79
HB-1A-64, -71 HB-4A-76	1993	–5	1.38	9.03	10.4
HB-1A-62, -65, -70	2009	–5	5.07	11.4	16.5
A212B (LS)					
LS-1-1, -2, -3	2009	–10	5.89	3.60	9.49
Nozzle Weld					
NW-2-1, -4, -8	1993	0	1.65	0.681	2.33
NW-2-2, -3	2009	0	8.85	4.02	12.9
Seam Weld					
SW-1-7, -8, -9	1993	–5	0.598	0.712	1.31
SW-6-4, -5, -6	2009	–5	0.675	3.49	4.17

Table E.3. Summary of HFIR A350LF3 nozzle-material surveillance-program dpa (n+γ) values

Year removed from HFIR	$NDTT_0$[a] (°F)	Irradiation location K[b]; P[c]	Irradiation time EFPY (100 MW)	dpa × 10^4		dpa × 10^4 (n + γ)
				n	γ	
1969	–110 –80	2; 1, 14 3; 1, 6	2.34	2.28 (1.64) 2.32 (2.40)	0.940 (1.88) 0.84 (0.84)	3.22 (3.52) 3.16 (3.24)
1974	–110 –80	2; 4, 13 3; 4, 9	6.45	6.28 (4.52) 7.11 (7.31)	2.60 (5.20) 2.84 (2.82)	8.88 (9.72) 9.95 (10.1)
1983	–110 –80	2; 2 3; 2	15.01	14.6 (10.5) 11.6 (11.9)	6.05 (12.1) 7.71 (7.6)	20.7 (22.6) 19.3 (19.5)
1986	–110 –80	2; 5, 7 3; 3, 5, 8	17.53	17.1 (12.3) 18.6[d] (19.1)	7.07 (14.1) 8.25[d] (8.2)	24.2 (26.4) 26.9[d] (27.3)
2005 Average of two methods[h]	–110	2; 8, 10, 11 2C; 1, 2, 16 2 + 2C	22.70 1.19[e]/1.25[f] 23.89/23.95	22.1 (15.9) 69.9 (79.3/73.3[g]) 92.0 (95.2/89.2) 92.0 (92.2)	9.15 (18.2) 4.01 (4.7/4.6) 13.2 (22.9/22.8) 13.2 (22.9)	31.3 (34.1) 73.9 (84.0/77.9) 105. (118/112) 105 (115)
2009	-110	2C; 5,6,7	2.31	180	12.0	192
	-80	3; 7, 10 2C; 3,4	22.7 2.31/2.25[i]	175	18.2	193
A350FL3 Half-Sized CVN Specimens						
2009	-110	2C; 14, 15	2.31	158	9.46	167

Note: the values in parentheses are from the previous analyses, as reported in [10] (ORNL/TM-2008/007).
[a]$NDTT_0$ = -110°F; corresponds to A350LF3 forging for HB-2 nozzle.
$NDTT_0$ = -80°F; corresponds to A350LF3 forging for HB-3 nozzle.
[b]Key.
[c]Position in key.
[d]There are large differences in dpa values of the three capsules combined in this data point.
[e]For capsule HB-2-17.
[f]For capsules HB-2-8 and HB-2-18.
[g]Results obtained with two methods of analysis (method 1/ method 2).
[h]Only one analysis method was used in the current evaluation.
[i]For capsule HB-3-41 2.31 EFPY and capsule HB-3-46 2.25 EFPY.

Table E.4. Summary of HFIR A105II nozzle-material surveillance-program dpa (n+γ) values

Year removed from HFIR	$NDTT_0$ (°F)	Irrad. location K[a]; P[b]	Irrad. time[c]	dpa × 10^4		dpa × 10^4 (n +γ)
				n	γ	
1969	–80	1; 1, 6 4; 1, 6	2.34	1.02 (0.69)	0.758 (0.91)	1.78 (1.60)
1974	-80	1; 4, 9 4; 4, 9	6.45	3.21[d] (2.04)	2.10[d] (2.50)	5.31[d] (4.54)
1983	-80	1; 2 4; 2	15.01	7.47 (4.88)	4.90 (5.81)	12.4 (10.7)
1986	-80	1; 3 4; 3, 8	17.53	10.1 (6.53)	5.15 (6.41)	15.3 (12.9)

Note: the values in parentheses are from the previous analyses, as reported in [10] (ORNL/TM-2008/007).
[a]Key.
[b]Position in key.
[c]EFPY (100 MW).
[d]There is a large spread in dpa(n) and dpa(γ) values of the capsules averaged in a single data point.

Table E.5. Summary of HFIR A212B(LT), nozzle-weld and seam-weld surveillance-program dpa(n+γ) values

Year removed from HFIR	Irrad. location K[a]; P[b]	Irrad. time[c]	dpa × 10^4		dpa × 10^4 (n +γ)
			n	γ	
A212B (LT) ($NDTT_0$ = –5°F)					
1983	6; 1 7; 7 5; 1	15.01	1.84 (1.71) [d]	6.86 (7.38) [d]	8.70 (9.09) [d]
1986	6; 2,3 7; 6,8	17.53	1.95 (1.82)	7.84 (8.42)	9.79 (10.2)
1993	6; 4,5,7,8 7; 1,4	19.22	1.38 (1.29)	9.03 (9.69)	10.4 (11.0)
2009	6; 4,5,6, 6;1,2,3 2W; 6,7,8 6 + 6 + 2W	17.53 5.16 2.31, 2.25[e] 25.00,24.94[e]	5.07	11.4	16.5
A212B (LS) ($NDTT_0$ = –10°F)					
2009	1; 1,6,10 2W; 23,24,25 1 + 2W	5.16 2.31 7.47	5.89	3.60	9.49
Nozzle weld ($NDTT_0$ = 0°F)					
1993	2; 2,6,16	1.69	1.65 (1.18)	0.681 (1.36)	2.33 (2.54)
2009	2; 3,5 2W; 1,2 2 + 2W	5.16 2.31 7.47	8.85	4.02	12.9
Seam weld ($NDTT_0$ = -5°F)					
1993	1; 7,8,9	1.69	0.598 (0.42)	0.712 (0.74)	1.31 (1.16)
2009	6; 6,7,5,8[f]	7.57	0.675	3.49	4.17

Note: the values in parentheses are from the previous analyses, as reported in [10] (ORNL/TM-2008/007).
[a]Key.
[b]Position in key.
[c]EFPY(100 MW).
[d]No data.
[e]For capsules HB-1A-62 and -65 the irradiation time is 2.31 EFPY; for capsule HB-1A-70 the irradiation time is 2.25 EFPY.
[f]Capsule SW-6-5 was irradiated at K6, P7 and K6, P5.

E.2 METHOD OF ESTIMATING VALUES OF DPA FOR SPECIFIC "MEASURED"‡ VALUES OF ΔNDTT

With the exception of Key 2, all of the Keys are asymmetrical with respect to the core; in most cases more than one capsule is used to determine a value of ΔNDTT, and gamma dosimetry is available from a relatively small number of the positions within a Key. The result is that a "measured" value of ΔNDTT corresponds to an average value of dpa, and the average value must be obtained by transposition of the few "measured" values of $\dot{dpa}$ to the positions of the capsules used to obtain a value of ΔNDTT.

The transposition method used assumes that the ratio of "measured" (actual) $\dot{dpa}$ values corresponding to two positions within a key is the same as the ratio of calculated values. The relationship can be expressed as

$$\begin{aligned} \dot{dpa}\left(n,\gamma;K,P_i;"meas"\right) &= \dot{dpa}\left(n,\gamma;K,P_j;"meas"\right) \\ &\times \dot{dpa}\left(n,\gamma;K,P_i;calc\right) / \dot{dpa}\left(n,\gamma;K,P_j;calc\right) \end{aligned} , \qquad \text{(E.1)}$$

where

$\dot{dpa}$ ($n, \gamma; K, P_i;$ *"meas"*) = desired value of $\dot{dpa}$,
K = the key of concern,
P_i = the position in K for which a "measured" value of $\dot{dpa}$ is required,
P_j = the position in K for which dosimetry is available, and
"meas" and calc denote "measured" and calculated values of $\dot{dpa}$.

As an example of the application of Eq. (E.1), suppose that dosimetry is available from K3, P8, and $\dot{dpa}$ (*n; K3, P2; "meas"*) is required. Using Eq. (E.1),

$$\begin{aligned} \dot{dpa}\left(n;K3,P2;"meas"\right) &= \dot{dpa}\left(n;K3,P8;"meas"\right) \\ &\times \dot{dpa}\left(n;K3,P2;calc\right) / \dot{dpa}\left(n;K3,P8;calc\right) \end{aligned} .$$

If more than one dosimeter is available in a key, one would tend to use the dosimeter closest to the position for which a "measured" value of $\dot{dpa}$ is required. The required positions, of course, are the ones used to determine a value of ΔNDTT.

If more than one capsule (which contains a set of three CVN specimens) is tested to determine a single value of ΔNDTT, which is usually the case, the arithmetic average of the several values of dpa calculated for each of the capsules, using Eq. (E.1), is used as the dpa value corresponding to the single value of ΔNDTT.

The calculated values of $\dot{dpa}$ used in Eq. (E.1) are the latest available and are included in Table E.6; this source is discussed in Appendix C of [18] (ORNL/TM-13693/S2). Because only ratios of the calculated values are used in the following calculations, normalization factors were not applied.

‡ The word "measured" with regard to ΔNDTT and dpa is shown in quotation marks because ΔNDTT and dpa are inferred from related experimental data rather than being measured directly [7,8,9].

Table E.6. Summary of updated values of calculated (unnormalized) neutron and gamma dpa rates for HFIR surveillance capsule Keys for times before and after 22.7 EFPY (Table C.7 in [18])

Key 1 (t > 0) [HB-1] [a]						
Position[b]	Angle (deg.)[c]	Location (X,Y,Z) (in.)[d]	Model mesh no.[e]	dpa rate × 10^{12}, s^{-1}		
				Neutron	Gamma	Total
1,5	30, 150	41.37, 2.41, ± 4.35	54, 28, 9	1.81	1.06	2.88
2,4	60, 120	40.85, 4.17, ± 2.51	53, 31, 6	2.30	1.00	3.30
3	90	40.65, 4.81, 0	53, 32, 1	2.49	0.978	3.46
6,10	210, 330	42.80, -2.41, ∓ 4.35	57, 17, 9	1.30	1.24	2.54
7,9	240, 300	43.31, -4.17, ∓ 2.51	58, 14, 6	1.27	1.30	2.57
8	270	43.51, -4.81, 0	58, 13, 1	1.25	1.32	2.57
Key 2 (0 < t < 22.7 EFPY) [HB-2, original design]						
Position[f]	Angle (deg.)	Location (X,R) (in.)	Model mesh no.	dpa rate × 10^{12}, s^{-1}		
				Neutron	Gamma	Total
N/A	N/A	45.79, 7.02	64, 37	3.82	1.52	5.35
Key 2C, 2W; 2D1C & 2D2C, 2D1W (t > 22.7 EFPY) [HB-2, modified design]						
Key, Dosimeter[g]	Angle (deg.)	Location (X,R) (in.)	Model mesh no.	dpa rate × 10^{12}, s^{-1}		
				Neutron	Gamma	Total
K2C	N/A	38.94, 6.5	(49, 26),(49,27)	155.0	10.2	165.2
K2W	N/A	39.69, 12.0	(50, 47),(51,49)	4.36	2.59	6.95
2D1C & 2D2C	N/A	(46.44 & 45.92), 7.0	(64,28),(64,29)	75.8	3.60	79.4
2D1W	N/A	46.44, 13.56	(62,51),(62,52) (61,51),(61,52)	2.10	1.31	3.41
Key 3 (t > 0 EFPY) [HB-3]						
Position	Angle (deg.)	Location (X,Y,Z) (in.)	Model mesh no.	dpa rate × 10^{12}, s^{-1}		
				Neutron	Gamma	Total
1,5	30, 150	45.51, -2.45, ± 4.35	51, 15, 9	2.61	1.24	3.84
2,4	60, 120	45.93, -4.24, ± 2.51	51, 12, 6	2.56	1.25	3.81
3	90	46.08, -4.89, 0	52, 11, 1	2.60	1.26	3.86
6,10	210, 330	44.39, 2.45, ∓ 4.35	48, 26, 9	3.55	1.19	4.73
7,9	240, 300	43.97, 4.24, ∓ 2.51	47, 29, 6	4.13	1.17	5.29
8	270	43.82, 4.89, 0	47, 30, 1	4.40	1.16	5.56
Key 4 (0 < t < 22.7 EFPY) [HB-4, original design]						
Position	Angle (deg.)	Location (X,Y,Z) (in.)	Model mesh no.	dpa rate × 10^{12}, s^{-1}		
				Neutron	Gamma	Total
1,5	30, 150	42.80, -2.41, ± 4.35	57, 17, 9	1.30	1.24	2.54
2,4	60, 120	43.31, -4.17, ± 2.51	58, 14, 6	1.27	1.30	2.57
3	90	43.51, -4.81, 0	58, 13, 1	1.25	1.32	2.57
6,10	210, 330	41.37, 2.41, ∓ 4.35	54, 28, 9	1.81	1.06	2.88
7,9	240, 300	40.85, 4.17, ∓ 2.51	53, 31, 6	2.30	1.00	3.30
8	270	40.65, 4.81, 0	53, 32, 1	2.49	0.978	3.46
Key 4 (t > 22.7 EFPY) [HB-4, modified design]						
Position	Angle (deg.)	Location (X,Y,Z) (in.)	Model mesh no.	dpa rate × 10^{12}, s^{-1}		
				Neutron	Gamma	Total
1,5	18, 162	36.44, -1.39, ± 4.28	50, 26, 17	16.1	3.91	20.0
2,4	54, 126	36.44, -3.64, ± 2.65	50, 16, 12	14.5	3.98	18.5
3	90	36.44, -4.50, 0	50, 14, 1	13.9	4.01	17.9
6,10	198, 342	36.44, 1.39, ∓ 4.28	50, 33, 17	18.1	3.81	21.9
7,9	234, 306	36.44, 3.64, ∓ 2.65	50, 43, 12	19.7	3.74	23.4
8	270	36.44, 4.50, 0	50, 44, 1	20.3	3.71	24.0
4D1	270			20.1	2.34	22.4
4D2	0			15.8	1.68	17.5
4D3	90			13.5	1.46	15.0

Table E.6. Summary of updated values of calculated (unnormalized) neutron and gamma dpa rates for HFIR surveillance capsule Keys for times before and after 22.7 EFPY (Table C.7 in [18]) (continued)

Key 5 (t <22.7 EFPY) [Monte Carlo (MCNP) model][h]						
Position	Angle (deg.)	Location (X,Y,Z) (in.)	Model mesh no.	dpa rate × 10^{12}, s^{-1}		
				Neutron	Gamma	Total
1	N/A	46.2, -8.1, -9.0	N/A	0.082	0.615	0.697
2	N/A	46.5, -10.5, -9.0	N/A	0.080	0.340	0.420
3	N/A	46.6, -12.8, -9.0	N/A	0.083	0.230	0.313
4	N/A	46.7, -15.1, -9.0	N/A	0.085	0.157	0.242
5	N/A	46.6, -17.4, -9.0	N/A	0.083	0.202	0.285
6	N/A	46.5, -19.7, -9.0	N/A	0.084	0.359	0.443
7	N/A	46.2, -20.1, -9.0	N/A	0.090	0.685	0.775
Key 6 (t > 0 EFPY) [HB-1(4), original design, extended model][i]						
Position	Angle (deg.)	Location (X,Y,Z) (in.)	Model mesh no.	dpa rate × 10^{12}, s^{-1}		
				Neutron	Gamma	Total
1	N/A	38.3, 10.5, 0	48, 43, 1	0.485	1.76	2.24
2	N/A	36.8, 12.3, 0	45, 47, 1	0.441	1.95	2.39
3	N/A	35.4, 14.1, 0	42, 51, 1	0.409	1.81	2.22
4	N/A	33.9, 16.0, 0	39, 54, 1	0.349	1.64	1.99
5	N/A	31.0, 18.9, 0	36, 60, 1	0.308	1.72	2.02
6	N/A	29.2, 20.4, 0	35, 63, 1	0.296	1.78	2.07
7	N/A	27.4, 21.9, 0	33, 66, 1	0.271	1.76	2.03
8	N/A	25.6, 23.4, 0	31, 69, 1	0.229	2.03	2.26
Key 7 (0 < t < 22.7 EFPY) [HB-4, original design, extended model][i]						
Position	Angle (deg.)	Location (X,Y,Z) (in.)	Model mesh no.	dpa rate × 10^{12}, s^{-1}		
				Neutron	Gamma	Total
1	N/A	26.2, 22.7, 0	32, 68, 1	0.261	1.93	2.19
2	N/A	27.9, 21.0, 0	33, 64, 1	0.306	1.85	2.16
3	N/A	29.6, 19.4, 0	35, 61, 1	0.336	1.87	2.20
4	N/A	31.3, 17.8, 0	37, 58, 1	0.357	1.81	2.16
5	N/A	33.1, 16.2, 0	39, 55, 1	0.372	1.70	2.07
6	N/A	34.8, 14.6, 0	41, 52, 1	0.394	1.76	2.16
7	N/A	37.5, 11.6, 0	46, 46, 1	0.445	1.85	2.29
8	N/A	38.8, 9.7, 0	49, 42, 1	0.520	1.83	2.35
Key 7 (t > 22.7 EFPY) [HB-4, modified design, extended model][i]						
Position	Angle (deg.)	Location (X,Y,Z) (in.)	Model mesh no.	dpa rate × 10^{12}, s^{-1}		
				Neutron	Gamma	Total
1	N/A	26.2, 22.7, 0	37, 82, 1	0.293	1.92	2.21
2	N/A	27.9, 21.0, 0	38, 78, 1	0.354	1.84	2.20
3	N/A	29.6, 19.4, 0	40, 75, 1	0.389	1.87	2.26
4	N/A	31.3, 17.8, 0	42, 72, 1	0.414	1.82	2.23
5	N/A	33.1, 16.2, 0	44, 69, 1	0.429	1.71	2.14
6	N/A	34.8, 14.6, 0	46, 66, 1	0.460	1.75	2.21
7	N/A	37.5, 11.6, 0	52, 60, 1	0.554	1.87	2.42
8	N/A	38.8, 9.7, 0	55, 56, 1	0.832	1.64	2.48

[a]The model for HB-1 is the same as the original (un-enlarged) model for HB-4.
[b]Models are assumed symmetric above and below the horizontal midplane such that points that differ only in the sign of the Z coordinate are the same.
[c]Angles are measured clockwise from the 12 o'clock position from the perspective of sighting along the beam tube toward the outside of the vessel (+X direction). This convention is observed for all beam tubes.
[d]The models are symmetric above and below the Z = 0 plane. Negative Z coordinate values therefore refer to surveillance capsule position angles between 90 and 270 degrees. When sighting along the beam tube toward the outside of the vessel (+X direction), the +Y direction is to the left for beam tubes HB-2, 3, and 4. For HB-1, the +Y direction is to the right.
[e]Mesh interval numbers are for the appropriate 3D or 2D beam tube model. These define the model mesh cell in which the Key location falls. However, dpa rate values are determined by interpolation with values from surrounding mesh cells. For HB-2, values are averages for cells specified.
[f]Because HB-2 models are 2D (axial [X] and radial [R]), there is no differentiation between azimuthal Key positions.
[g]Key K2C/2W aligns capsules approximately with the HB-2 nozzle corner (C) and nozzle weld (W). Dosimeters 2D1C, 2D2C, and 2D1W are attached to Key K2C/2W.
[h] Location is with respect to HB-4.
[i] The model has been extended in the +Y direction to accommodate the Key 6 or 7 positions.

The terms "measured" values of $\dot{dpa}(n)$ and $\dot{dpa}(\gamma)$ are used in this Appendix as the synonyms for the "adjusted" values of the $\dot{dpa}(n)$ and $\dot{dpa}(\gamma)$, determined at the locations where the dosimetry-dedicated capsules were irradiated and for the $\dot{dpa}(n)$ and $\dot{dpa}(\gamma)$ values derived with Eq. (E.1).

The irradiation times and neutron and gamma "measured" dpa rates for surveillance capsules removed from HFIR in 2009 are listed in Table E.7; the values are based on Tables 10−13 of this report.

Table E.7. Irradiation times and neutron and gamma "measured" dpa rates for surveillance capsules removed from HFIR in 2009

Capsule	K;P[a]	Δt[b] EFPY(100 MW)	$\dot{dpa}(n)\times10^{12}$, s^{-1}	$\dot{dpa}(\gamma)\times10^{12}$, s^{-1}	Normalization Factor[c]	Ref.
A350LF3 ($NDTT_o$ = –110°F, HB-2 Nozzle)						
HB-2C-1	2C;5	/2.31	228	15.1		[d]
HB-2C-2	2C;6	/2.31	248	16.4		[d]
HB-2C-3	2C;7	/2.31	268	17.6		[d]
A350LF3 ($NDTT_o$ = –80°F, HB-3 Nozzle)						
HB-3-41	3;10	22.7/	3.55 × 1.046	1.19 × 1.097	n: 1.046[g]	[e]
	2C;3	/2.31	206	12.6	γ: 1.097[g]	[d]
HB-3-46	3;7	22.7/	4.13 × 1.046	1.17 × 1.097		[e]
	2C;4	/2.25	200	12.2		[d]
A212B(LT) ($NDTT_o$ = –5°F, Vessel Shell)						
HB-1A-62	6;5	17.53/	0.308 × 0.803	1.72 × 0.791	n: 0.803[i]	[e]
	6;2	5.16/	0.441 × 0.803	1.95 × 0.791	γ: 0.791[i]	[e]
	2W;6	/2.31	4.30	2.17		[d]
HB-1A-65	6;6	17.53/	0.296 × 0.803	1.78 × 0.791		[e]
	6;3	5.16/	0.409 × 0.803	1.81 × 0.791		[e]
	2W;7	/2.31	4.24	2.14		[d]
HB-1A-70	6;4	17.53/	0.349 × 0.803	1.64 × 0.791		[e]
	6;1	5.16/	0.485 × 0.803	1.76 × 0.791		[e]
	2W;8	/2.25	4.22	2.13		[d]
A212B(LS) ($NDTT_o$ = –5°F, Vessel Shell)						
LS-1-1	1;1	5.16/	1.81 × 0.890	1.06 × 0.884	n: 0.890[j]	[e]
	2W;23	/2.31	5.34	2.69	γ: 0.884[j]	[d]
LS-1-2	1;6	5.16/	1.30 × 0.890	1.24 × 0.884		[e]
	2W;24	/2.31	5.10	2.58		[d]
LS-1-3	1;10	5.16/	1.30 × 0.890	1.24 × 0.884		[e]
	2W;25	/2.31	5.09	2.57		[d]
Nozzle Weld ($NDTT_o$ = 0°F)						
NW-2-2	2;3	5.16/	3.82 × 0.809	1.52 × 0.840	n: 0.809[k]	[e]
	2W;1	/2.31	5.21	2.63	γ: 0.840[k]	[d]
NW-2-3	2;5	5.16/	3.82 × 0.809	1.52 × 0.840		[e]
	2W;2	/2.31	5.32	2.69		[d]
Seam Weld ($NDTT_o$ = –5°F)						
SW-6-4	6;6	5.16/2.41	0.309	1.78 × 0.791	γ: 0.791[l]	[d,e]
SW-6-5	6;7	5.16/	0.280	1.76 × 0.791		[d,e]
	6;5	/2.41	0.316	1.72 × 0.791		[d,e]
SW-6-6	6;8	5.16/2.41	0.249	2.03 × 0.791		[d,e]
Half-Size A350LF3 ($NDTT_o$ = –110°F, HB-2 Nozzle) CVN's						
HB-2C-10-1[f]	2C;14	/2.31	231	13.8		[d]
HB-2C-10-2[f]	2C;14	/2.31	213	12.7		[d]
HB-2C-11-1[f]	2C;15	/2.31	219	13.1		[d]
HB-2C-11-2[f]	2C;15	/2.31	205	12.2		[d]

[a]Key and position in Key.
[b]Irradiation time before and after 22.7 EFPY(100 MW).

[c]Normalization factors for neutron dpa rate (n) and gamma dpa rate (γ).
[d]This report, Tables 9−12.
[e]No dosimetry available. Values are calculated and multiplied by a normalization factor given in column 6.
[f]There are two dosimeters in each capsule. The capsule IDs are HB-2C-10 and HB-2C-11.
[g]Normalization factors for Key 3 are the averages of the NEW Adj./Calc. values for Key 3; P 3,8, and 10 listed in Table E.1.
[i]Key 6 is symmetric with Key 7. No dosimetry capsules are available from Key 6; therefore, the normalization factors are determined as the Adj./Calc. values for Key 7, P,5 from Table E.1. The capsule DOS-6 from Key 7, P1 is not used because the HR-4 beam tube was not installed when DOS-6 was irradiated.
[j]Normalization factors are the averages of the new Adj./Calc. values for Key 4, P 2 and 10 listed in Table E.1.
[k]Normalization factors are the values of the new Adj./Calc. values for Key 2, P 9 listed in Table E.1.
[l]Key 6 is about symmetric with Key 7. The normalization factor for γ-induced dpa rate is the value of the new Adj./Calc. ratio for gamma dpa rate at Key 7, P 5 listed in Table E.1.

E.3 HB-2 NOZZLE MATERIAL (A350LF3, $NDTT_0$ = - 110°F)

As indicated in Table E.3, CVN data for the subject material are available from K2, P1, 14 (1969); K2, P4, 13 (1974); K2, P2 (1983); K2, P5, 7 (1986); K2C, P1, 2, 16 (2005), and K2C, P5, 6, and 7 (2009). As indicated in Table E.1 dosimetry data are available from K2, P9 for t ≤ 22.70 EFPY. For t > 22.70 EFPY, dosimetry data are available from K2C, P1, 4 and from surveillance capsules HB-2-8, HB-2-17, HB-2-18 (Appendix F, Table F.3 of this report).

Three-dimensional neutron and gamma flux calculations indicate that K2 is essentially axisymmetric [17], and thus the dosimetry from K2 and K2C can be applied to all of the K2 and K2C positions, respectively.
The sources of dpa values corresponding to the values of ΔNDTT "measured" thus far for the HB-2 nozzle material are addressed subsequently.

E.3.1 1969 (Δ*t* = 2.34 EFPY)[§]

Surveillance capsules irradiated at K2, P1 and P14; from Table E.1 based on the dosimetry from K2, P9, which gives dpa(n)/s =3.09×10^{-12} s^{-1} and dpa(γ) =1.28×10^{-12} s^{-1}):

dpa(n, "meas") = 3.09×10^{-12} s^{-1} × 2.34EFPY × 3.15×10^{7} s/EFPY = 2.28×10^{-4}
(previous value: 1.64×10^{-4})

dpa(γ, "meas") = 1.28×10^{-12} s^{-1} × 2.34EFPY × 3.15×10^{7} s/EFPY = 9.43×10^{-5}
= (previous value: 1.88×10^{-4})

dpa(n + γ) = $(2.28 + 0.94) \times 10^{-4} = 3.22 \times 10^{-4}$ (previous value: 3.52×10^{-4})

E.3.2 1974 (Δ*t* = 6.45 EFPY)

Surveillance capsules irradiated at K2, P4 and P13; from the same source as for E.3.1:

dpa(n, "meas") = 3.09×10^{-12} s^{-1} × 6.45EFPY × 3.15×10^{7} s/EFPY = 6.28×10^{-4}
(previous value: 4.52×10^{-4})

dpa(γ, "meas") = 1.28×10^{-12} s^{-1} × 6.45EFPY × 3.15×10^{7} s/EFPY = 2.60×10^{-4}

[§]Date capsules removed from HFIR for testing and the irradiation time.

(previous value 5.20×10^{-4})

dpa(n + γ) = $(6.28 + 2.60) \times 10^{-4} = 8.88 \times 10^{-4}$ (previous value 9.72×10^{-4})

E.3.3 1983 (Δ*t* = 15.01 EFPY)

Surveillance capsule irradiated at K2, P2; from the same source as for E.3.1:

dpa(n, "meas") = 3.09×10^{-12} s^{-1} × 15.01EFPY × 3.15×10^{7} s/EFPY = 14.6×10^{-4}
(previous value 10.5×10^{-4})

dpa(γ, "meas") = 1.28×10^{-12} s^{-1} × 15.01EFPY × 3.15×10^{7} s/EFPY = 6.05×10^{-4}
(previous value 12.1×10^{-4})

dpa(n + γ) = $(14.6 + 6.05) \times 10^{-4} = 20.7 \times 10^{-4}$
(previous value 22.6×10^{-4})

E.3.4 1986 (Δ*t* = 17.53 EFPY)

Surveillance capsules irradiated at K2, P5 and P7; from the same source as for E.3.1:

dpa(n, "meas") = 3.09×10^{-12} s^{-1} × 17.53EFPY × 3.15×10^{7} s/EFPY = 17.1×10^{-4}
(previous value: 12.3×10^{-4})

dpa(γ, "meas") = 1.28×10^{-12} s^{-1} × 17.53EFPY × 3.15×10^{7} s/EFPY = 7.07×10^{-4}
previous value 14.1×10^{-4})

dpa(n + γ) = $(17.1 + 7.07) \times 10^{-4} = 24.2 \times 10^{-4}$
(previous value 26.4×10^{-4})

E.3.5 2005 (Δ*t* = 22.70 + 0.11 +1.26 = 24.06 EFFPY)

Surveillance capsules HB-2-8, HB-2-17, and HB-2-18:

The 2005 ΔNDTT value was obtained by testing the CVN specimens in capsules HB-2-8, HB-2-17, and HB-2-18. Capsules HB-2-8 and HB-2-18 were irradiated during fuel cycles 1-406, and HB-2-17 was irradiated during cycles 1-399 and 401-406. The capsule HB-2-17 was removed for cycle 400 to provide space for a single-cycle dosimetry-dedicated capsule DOS-8. For cycles 1-382 the three surveillance capsules were in Key 2, and for cycles 383-406, with the exception of capsule HB-2-17 during cycle 400, they were in Key 2C. As discussed later, the doses for cycles 383 and 384 were negligible. Thus, the irradiation periods of interest for calculating values of dpa are as follows:

Cycles 1-406:	24.06 EFPY (previous value 24.06 EFPY)
Cycles 1-382:	22.70 EFPY (previous value 22.70 EFPY)
Cycle 400:	5.68×10^{-2} EFPY (previous value 5.67×10^{-2} EFPY)
Cycles 383-384:	10.79×10^{-2} EFPY (previous value 10.78×10^{-2} EFPY)
Cycles 385-406:	1.26 EFPY (previous value 1.25 EFPY)

Cycles (385-399) + (401-406) = 1.20 EFPY (previous value 1.19 EFPY)

The first irradiation period (22.70 EFPY, fuel cycles 1-382) was with the original HB-2 beam tube and Key 2 installed. For the second irradiation period (0.11 EFPY, fuel cycles 383 and 384), Key K2C/2W

was installed but no HB-2 beam tube was installed. For the third irradiation period (1.26 EFPY, fuel cycles 385-406), Key K2C/2W and the enlarged HB-2 beam tube were installed. Without the HB-2 beam tube installed (cycles 383 and 384), the total dpa/s value at K2C was about two orders of magnitude less, as indicated by the calculated results below:

Calculated $\dot{dpa}$ values at Key 2C with and without the HB-2 enlarged beam tube installed

Condition	$\dot{dpa}(n), s^{-1}$	$\dot{dpa}(\gamma), s^{-1}$	$\dot{dpa}(n+\gamma), s^{-1}$
w /beam tube	1.55×10^{-10}	1.02×10^{-11}	1.65×10^{-10}
w/o beam tube	1.00×10^{-12}	1.65×10^{-12}	2.65×10^{-12}

Thus, fuel cycles 383 and 384 made essentially no contribution to the dose at 24.06 EFPY, in which case the effective irradiation time after 22.70 EFPY was, as indicated previously, 1.26 EFPY.

The dpa values at t = 22.70 EFPY, using the dosimetry results from Table E.1, K2, P9 are

dpa(n) = 3.09×10^{-12} s^{-1} × 22.70 EFPY × 3.15×10^{7}s/EFPY= 22.1×10^{-4} (previous value 15.9×10^{-4})

dpa(γ) = 1.28×10^{-12} s^{-1} × 22.70 EFPY × 3.15×10^{7} = 9.15×10^{-4} (previous value 18.2×10^{-4})

dpa(n + γ) = $(22.1 + 9.15) \times 10^{-4} = 31.3 \times 10^{-4}$ (previous value 34.1×10^{-4})

For the third period (Δt = 1.26 EFPY, cycles 385-406), dosimetry data were obtained from the dosimetry wires included in the three surveillance capsules (HB-2-8, HB-2-17, HB-2-18). The dpa rates for each capsule were then determined by scaling the neutron and gamma dpa rates for dosimetry capsule DOS-8, which was irradiated in Key 2C, P1. The scaling factor for each surveillance capsule was determined as the average of the ratios of the Ni-58 (n, p) Co-58 and Fe-54 (n, p) Mn-54 reaction rates in the surveillance capsule and DOS-8 dosimetry capsule. Details are shown in Appendix F in Tables F.1 and F.3 of this report.

As indicated previously, capsules HB-2-8 and HB-2-18, for t > 22.70 EFPY, were irradiated during fuel cycles 383 through 406, while capsule HB-2-17 was irradiated during cycles 383 through 399 and cycles 401 through 406. Thus, with reference to the previous effective irradiation times and the $\dot{dpa}$ values given in Table F.3, which are based on a reactor power of 100 MW:

dpa(n, HB-2-8) = 1.85×10^{-10} s^{-1} × 1.26 EFPY × 3.15×10^{7} s/EFPY = 73.4×10^{-4} (previous value: 76.0×10^{-4})

dpa(n, HB-2-18) = 1.74×10^{-10} s^{-1} × 1.26 EFPY × 3.15×10^{7} s/EFPY = 69.1×10^{-4} (previous value: 73.2×10^{-4})

dpa(n, HB-2-17) = 1.78×10^{-10} s^{-1} × 1.20 EFPY × 3.15×10^{7} s/EFPY = 67.3×10^{-4} (previous value: 70.6×10^{-4})

dpa(γ, HB-2-8) = 1.06×10^{-11} s^{-1} × 1.26 EFPY × 3.15×10^{7} s/EFPY = 4.21×10^{-4} (previous value: 4.60×10^{-4})

dpa(γ, HB-2-18) = 1.00×10^{-11} s^{-1} × 1.26 EFPY × 3.15×10^{7} s/EFPY = 3.97×10^{-4} (previous value: 4.68×10^{-4})

dpa(γ, HB-2-17) = 1.02×10^{-11} s^{-1} × 1.20 EFPY × 3.15×10^{7} s/EFPY = 3.86×10^{-4} (previous value: 4.41×10^{-4})

$\overline{dpa}$ (n) = $(73.4 + 69.1 + 67.3) \times 10^{-4}/3 = 69.9 \times 10^{-4}$ (previous value: 73.3×10^{-4})

$\overline{dpa}$ (γ) = (4.21 + 3.97 + 3.86) × 10^{-4}/3 = 4.01 × 10^{-4} (previous value: 4.56 × 10^{-4})

dpa(n+γ) = (69.9 + 4.0) × 10^{-4} = 73.9 × 10^{-4} (previous value: 77.9 × 10^{-4})

For all irradiation periods (Δt = 24.06 EFPY),

dpa (n+ γ; t = 24.06 EFPY) = (31.3 + 73.9) × 10^{-4} = 105 × 10^{-4} (previous value: 115 × 10^{-4})

This is the best-estimate value of dpa(n+γ) for A350LF3 ($NDTT_0$ = - 110°F) at t = 24.06 EFPY; the dpa(n+γ) best estimate in previous work (ORNL/TM-2008/007) was 115 × 10^{-4}.

E.3.6 2009 (Δ*t* = 2.31 EFPY)

For surveillance capsules HB-2C-1, HB-2C-2, and HB-2C-3, the irradiation times and dpa rates used in the calculation of the dpa(n+γ) values are those included in Table E.7.

A350LF3 ($NDTT_o$ = –110°F, HB-2 Nozzle)

HB-2C-1:
K2C, P5; Δt = 2.31 EFPY
dpa(n+γ) = (228 + 15.1) × 10^{-12} s^{-1} × 2.31 EFPY × 3.15 × 10^7 s/EFPY =
= (166 + 11) × 10^{-4} = 177 × 10^{-4}

HB-2C-2:
K2C, P6; Δt = 2.31 EFPY
dpa(n+γ) = (248 + 16.4) × 10^{-12} s^{-1} × 2.31 EFPY × 3.15 × 10^7 s/EFPY =
= (180 + 12) × 10^{-4} = 192 × 10^{-4}

HB-2C-3:
K2C, P7; Δt = 2.31 EFPY
dpa(n+γ) = (268 + 17.6) × 10^{-12} s^{-1} × 2.31 EFPY × 3.15 × 10^7 s/EFPY =
= (195 + 13) × 10^{-4} = 208 × 10^{-4}

$\overline{dpa}$ (n+γ) = (166 +180 +195) × 10^{-4}/3 + (11 +12 +13) × 10^{-4}/3 =
= (180 + 12.0) × 10^{-4}= 192 × 10^{-4}

E.4 HB-3 NOZZLE MATERIAL A350LF3 ($NDTT_0$ = -80°F)

As indicated in Table E.1, dosimetry is available for K3, P3, 8, 10. Calculated values of $\dot{dpa}$ (n) and $\dot{dpa}$ (γ) for all positions in K3 are available in Table E.6, and the positions in K3 for which CVN data are available are given in Table B.1 of [6] and Table E.3 of this report. The locations of capsule positions in K3 are shown in Fig. 2 of [6] and in Fig. 4 in [28].

As indicated in Table E.3, for all but one of the irradiation times, more than one capsule was used to obtain a value of ΔNDTT. Thus, space-averaged values of dpa must be estimated for all but one value of ΔNDTT. Also, because of the asymmetric design of K3 and the limited amount of dosimetry, the transposition technique discussed in Section E.2 was applied. Consistent with this approach, average values of dpa were obtained for K3 as follows:

E.4.1 1969 (Δt = 2.34 EFPY)

CVN data are available from K3, P1 and 6. "Measured" values of $\dot{dpa}$ are available for K3, P10, which, because of symmetry about the horizontal midplane, is the same as P6. No "measured" values are available for K3, P1.

Using Eq. (E.1)

$$\dot{dpa}\,(\text{n}, \gamma; \text{K3, P1; "meas"}) = \dot{dpa}\,(\text{n}, \gamma; \text{K3, P6; "meas"}) \times \dot{dpa}\,(\text{n}, \gamma; \text{K3, P1; calc})/\dot{dpa}\,(\text{n}, \gamma; \text{K3, P6; calc})$$

Substituting values from Tables E.1 and E.6,

$$\dot{dpa}\,(\text{n, K3, P1; "meas"}) = 3.63 \times 10^{-12}\ \text{s}^{-1} \times 2.61 \times 10^{-12}/3.55 \times 10^{-12} = 2.67 \times 10^{-12}\ \text{s}^{-1}$$

(previous value: $2.75 \times 10^{-12}\ \text{s}^{-1}$)

$$\dot{dpa}\,(\gamma\text{; K3, P1; "meas"}) = 1.11 \times 10^{-12}\ \text{s}^{-1} \times 1.24 \times 10^{-12}/1.19 \times 10^{-12} = 1.16 \times 10^{-12}\ \text{s}^{-1}$$

(previous value: $1.16 \times 10^{-12}\ \text{s}^{-1}$)

$$\dot{dpa}\,(\text{n; K3, P}\overline{1,6}\text{; "meas"}) = (2.67 + 3.63) \times 10^{-12}\ \text{s}^{-1}/2 = 3.15 \times 10^{-12}\ \text{s}^{-1}$$

(previous value: $3.25 \times 10^{-12}\ \text{s}^{-1}$)

$$\dot{dpa}\,(\gamma\text{; K3, P}\overline{1,6}\text{; "meas"}) = (1.16 + 1.11) \times 10^{-12}\ \text{s}^{-1}/2 = 1.14 \times 10^{-12}\ \text{s}^{-1}$$

(previous value: $1.14 \times 10^{-12}\ \text{s}^{-1}$)

$$\text{dpa (n; K3, P}\overline{1,6}) = 3.15 \times 10^{-12}\ \text{s}^{-1} \times 2.34\ \text{EFPY} \times 3.15 \times 10^{7}\text{s/EFPY} = 2.32 \times 10^{-4}$$

(previous value: 2.40×10^{-4}

$$\text{dpa } (\gamma\text{; K3, P}\overline{1,6}) = 1.14 \times 10^{-12}\ \text{s}^{-1} \times 2.34\ \text{EFPY} \times 3.15 \times 10^{7}\ \text{s/EFPY} = 0.84 \times 10^{-4}$$

(previous value: 0.84×10^{-4})

$$\text{dpa } (\text{n}+\gamma\text{; K3, P}\overline{1,6}) = (2.32 + 0.84) \times 10^{-4} = 3.16 \times 10^{-4}$$

(previous value: 3.24×10^{-4})

E.4.2 1974 (Δt = 6.45 EFPY)

CVN data are available from K3, P4, and 9, from which a single value of ΔNDTT is obtained. No dosimetry is available from K3, P4 or P9 but is available from K3, P3, 8, and 10. A transposition of dosimetry will be made from P3 to P4 and from the average of P8 and P10 to P9.

Applying Eq. (E.1)

$$\dot{dpa}\,(\text{n}, \gamma\text{; K3, P4; "meas"}) = \dot{dpa}\,(\text{n}, \gamma\text{; K3, P3; "meas"})$$

$\times\ \dot{dpa}$ (n, γ; K3, P4; calc)/ $\dot{dpa}$ (n, γ; K3, P3; calc)

Substituting values from Tables E.1 and E.6,

$\dot{dpa}$ (n, K3, P4; "meas") $= 2.49 \times 10^{-12} \times 2.56 \times 10^{-12} / 2.60 \times 10^{-12} = 2.45 \times 10^{-12}\ s^{-1}$
(previous value: $2.52 \times 10^{-12}\ s^{-1}$)

$\dot{dpa}$ (γ; K3, P4; "meas") $= 1.64 \times 10^{-12} \times 1.25 \times 10^{-12} / 1.26 \times 10^{-12} = 1.63 \times 10^{-12}\ s^{-1}$
(previous value: $1.61 \times 10^{-12} s^{-1}$)

$\dot{dpa}$ (n,γ; K3, P9; "meas") = $\dot{dpa}$ (n, γ; K3, P$\overline{8,10}$; "meas")
$\times\ \dot{dpa}$ (n, γ; K3, P9; calc)/ $\dot{dpa}$ (n, γ; K3, P$\overline{8,10}$; calc)

$\dot{dpa}$ (n; K3, P9; "meas") $= (5.11 + 3.63) \times 10^{-12} \times 0.50$
$\times 4.13 \times 10^{-12} / ((4.40 + 3.55) \times 10^{-12} \times 0.50) = 4.54 \times 10^{-12}\ s^{-1}$
(previous value: $4.68 \times 10^{-12}\ s^{-1}$)

$\dot{dpa}$ (γ; K3, P9; "meas") $= (1.23 + 1.11) \times 10^{-12} \times 0.50$
$\times 1.17 \times 10^{-12} / (1.16 + 1.19) \times 10^{-12} \times 0.50 = 1.17 \times 10^{-12}\ s^{-1}$
(previous value: $1.17 \times 10^{-12}\ s^{-1}$)

$\dot{dpa}$ (n; K3, P$\overline{4,9}$; "meas") $= (2.45 + 4.54) \times 10^{-12} / 2 = 3.50 \times 10^{-12}\ s^{-1}$
(previous value: $3.60 \times 10^{-12}\ s^{-1}$)

$\dot{dpa}$ (γ; K3, P$\overline{4,9}$; "meas") $= (1.63 + 1.17) \times 10^{-12} / 2 = 1.40 \times 10^{-12}\ s^{-1}$
(previous value: $1.39 \times 10^{-12}\ s^{-1}$)

dpa(n) $= 3.50 \times 10^{-12}\ s^{-1} \times 6.45$ EFPY $\times 3.15 \times 10^{7}$ s/EFPY $= 7.11 \times 10^{-4}$
(previous value: 7.31×10^{-4})

dpa(γ) $= 1.40 \times 10^{-12}\ s^{-1} \times 6.45$ EFPY $\times 3.15 \times 10^{7}$ s/EFPY $= 2.84 \times 10^{-4}$
(previous value: 2.82×10^{-4})

dpa(n+γ) $= (7.11 + 2.84) \times 10^{-4} = 9.95 \times 10^{-4}$
(previous value: 10.1×10^{-4})

E.4.3 1983 (Δt = 15.01 EFPY)

CVN data are available from K3, P2, and dosimetry data are available for K3, P3. Thus, a transposition of dosimetry data will be made from P3 to P2.

Applying Eq. (E.1),

$\dot{dpa}$ (n, γ; K3, P2; "meas") = $\dot{dpa}$ (n, γ; K3, P3; "meas")
$\times\ \dot{dpa}$ (n, γ; K3, P2; calc)/ $\dot{dpa}$ (n, γ; K3, P3; calc)

Substituting values from Tables E.1 and E.6,

$\dot{dpa}$ (n, K3, P2; "meas") $= 2.49 \times 10^{-12}\ s^{-1} \times 2.56 \times 10^{-12} / 2.60 \times 10^{-12} = 2.45 \times 10^{-12}\ s^{-1}$

(previous value: 2.52×10^{-12} s^{-1})

$\dot{dpa}$ (γ; K3, P2; "meas") $= 1.64 \times 10^{-12}$ $s^{-1} \times 1.25 \times 10^{-12} / 1.26 \times 10^{-12} = 1.63$ 10^{-12} s^{-1}

(previous value: 1.61×10^{-12} s^{-1})

dpa (n; K3, P2; "meas") $= 2.45 \times 10^{-12}$ $s^{-1} \times 15.01$ EFPY $\times 3.15 \times 10^{7}$ s/EFPY$= 11.6 \times 10^{-4}$

(previous value: 11.9×10^{-4})

dpa (γ; K3, P2; "meas") $= 1.63 \times 10^{-12}$ $s^{-1} \times 15.01$ EFPY $\times 3.15 \times 10^{7}$ s/EFPY $= 7.71 \times 10^{-4}$

(previous value: 7.61×10^{-4})

dpa (n+γ) $= (11.6 + 7.71) \times 10^{-4} = 19.3 \times 10^{-4}$ (previous value: 19.5×10^{-4})

E.4.4 1986 (Δt = 17.53 EFPY)

CVN data are available from K3, P3, 5, and 8, and dosimetry data are available for K3, P3 and 8. A transposition of dosimetry data will be made from K3, P3 to K3, P5.

Applying Eq. (E.1),

$\dot{dpa}$ (n, γ; K3, P5 "meas") $= \dot{dpa}$ (n, γ; K3, P3; "meas")
$\times$ $\dot{dpa}$ (n, γ; K3, P5; calc)/ $\dot{dpa}$ (n, γ; K3, P3; calc)

Substituting values from Tables E.1 and E.6,

$\dot{dpa}$ (n; K3, P5; "meas") $= 2.49 \times 10^{-12}$ $s^{-1} \times 2.61 \times 10^{-12} / 2.60 \times 10^{-12} = 2.50 \times 10^{-12}$ s^{-1}

(previous value: 2.57×10^{-12} s^{-1})

$\dot{dpa}$ (γ; K3, P5; "meas") $= 1.64 \times 10^{-12}$ $s^{-1} \times 1.24 \times 10^{-12} / 1.26 \times 10^{-12} = 1.61 \times 10^{-12}$ s^{-1}

(previous value: 1.59×10^{-12} s^{-1})

dpa(n; K3, P5; "meas") $= 2.50 \times 10^{-12}$ $s^{-1} \times 17.53$ EFPY $\times 3.15 \times 10^{7}$ s/EFPY$= 13.8 \times 10^{-4}$

(previous value: 14.2×10^{-4})

dpa(γ; K3, P5; "meas") $= 1.61 \times 10^{-12}$ $s^{-1} \times 17.53$ EFPY $\times 3.15 \times 10^{7}$ s/EFPY$= 8.89 \times 10^{-4}$

(previous value: 8.78×10^{-4})

dpa(n; K3, P3; "meas") $= 2.49 \times 10^{-12}$ $s^{-1} \times 17.53$ EFPY $\times 3.15 \times 10^{7}$ s/EFPY $= 13.7 \times 10^{-4}$

(previous value: 14.1×10^{-4})

dpa(γ; K3, P3; "meas") $= 1.64 \times 10^{-12}$ $s^{-1} \times 17.53$ EFPY $\times 3.15 \times 10^{7}$ s/EFPY $= 9.06 \times 10^{-4}$

(previous value: 8.95×10^{-4})

dpa(n; K3, P8; "meas") $= 5.11 \times 10^{-12}$ $s^{-1} \times 17.53$ EFPY $\times 3.15 \times 10^{7}$ s/EFPY $= 28.2 \times 10^{-4}$

(previous value: 29.1×10^{-4})

dpa(γ; K3, P8; "meas") $= 1.23 \times 10^{-12}$ $s^{-1} \times 17.53$ EFPY $\times 3.15 \times 10^{7}$ s/EFPY $= 6.79 \times 10^{-4}$

(previous value: 6.85×10^{-4})

dpa(n; K3, P$\overline{3,5,8}$; "meas") = (13.8 + 13.7 +28.2) × 10^{-4}/3 = 18.6 × 10^{-4}
(previous value: 19.1 × 10^{-4})
dpa(γ; K3, P$\overline{3,5,8}$; "meas") = (8.89 + 9.06 + 6.79) × 10^{-4}/3 = 8.25 × 10^{-4}
(previous value: 8.2 × 10^{-4})
dpa(n+γ; K3, P$\overline{3,5,8}$; "meas") = (18.6+ 8.25) × 10^{-4} = 26.9 × 10^{-4}
(previous value: 27.3 × 10^{-4})

Note that there is a large spread in dpa(n) and dpa(γ) of the three capsules combined in a single data point.

E.4.5 2009 (Δ*t* = 25.0 EFPY)

Capsules HB-3-41 and HB-3-46; irradiation times, locations, dpa rates, and scaling factors used in the calculation of the dpa(n+γ) values are those included in Table E.7.

HB-3-41:

K3, P10; Δ*t* = 22.7 EFPY

dpa(n+γ) = (3.55 × 1.046 + 1.19 × 1.097) × 10^{-12} s^{-1} × 22.7 EFPY × 3.15 × 10^{7} s/EFPY= (26.6 + 9.3) × 10^{-4} = 35.9 × 10^{-4}

K2C, P3; Δ*t* = 2.31 EFPY

dpa(n+γ) = (206 + 12.6) × 10^{-12} s^{-1} × 2.31 EFPY × 3.15 × 10^{7} s/EFPY= (150 + 9.2) × 10^{-4} = 159 × 10^{-4}

Total dpa(n+γ) = ((26.6 +150) + (9.3 + 9.2)) × 10^{-4} = (177 + 18.5) × 10^{-4} = 196 × 10^{-4}

HB-3-46:

K3, P7; Δ*t* = 22.7 EFPY

dpa(n+γ) = (4.13 × 1.046 + 1.17 × 1.097) × 10^{-12} s^{-1} × 22.7 EFPY × 3.15 × 10^{7} s/EFPY = (30.9 + 9.2) × 10^{-4} = 40.1 × 10^{-4}

K2C, P4; Δ*t* = 2.25 EFPY

dpa(n+γ) = (200 +12.2) × 10^{-12} s^{-1} × 2.25 EFPY × 3.15 × 10^{7} s/EFPY = (142 + 8.6) × 10^{-4} = 150 × 10^{-4}

Total dpa(n+γ) = ((30.9 + 142) + (9.2 + 8.6)) × 10^{-4} = (173 + 17.8) × 10^{-4} = 191 × 10^{-4}

$\overline{dpa}$ (n+γ) = ((177 +173) + (18.5 + 17.8)) × 10^{-4}/2 = (175 + 18.2) × 10^{-4}
= 193 × 10^{-4}

E.4.6 2009 (Δt = 2.31 EFPY)

Capsules HB-2C-10 and HB-2C-11 with half-size specimens of A350LF3 ($NDTT_0$ = -100°F); time of irradiation and dpa rates used in the calculations of dpa(n+γ) values are those from Table E.7.

K2C, P14, 15; Δt = 2.31 EFPY

$$\overline{\dot{dpa}(n)} = (231 + 213 + 219 + 205) \times 10^{-12}\ s^{-1}/4 = 217 \times 10^{-12}\ s^{-1}$$

$$\overline{\dot{dpa}(\gamma)} = (13.8 + 12.7 + 13.1 + 12.2) \times 10^{-12}\ s^{-1}/4 = 13.0 \times 10^{-12}\ s^{-1}$$

AVERAGE $dpa(n+\gamma) = (217 + 13.0) \times 10^{-12}\ s^{-1} \times 2.31\ \text{EFPY} \times 3.15 \times 10^{7}\ \text{s/EFPY}$

$$= (158 + 9.46)\ 10^{-4} = 167 \times 10^{-4}$$

E.5 HB-1, 4 NOZZLE MATERIAL (A105II, $NDTT_0$ = -80°F)

Prior to a reactor operating time of 22.7 EFPY, the HB-1 and HB-4 beam tubes, beam-tube nozzles, and capsule mounts (Keys 1 and 4) were effectively mirror images, except that the positions were numbered in both keys clockwise when looking outward. Since that time, the HB-4 beam tube and Key 4 have been modified. No surveillance data are available for the modified designs, but data are available through a capsule removal and testing date of 1986.

The full reanalysis—with spectrum adjustment calculations using new calculated neutron and gamma fluxes—of dosimetry experiments which were performed at K4, P2 and P10 in 1993 [16] provided the following values (Table E.1):

$\dot{dpa}$ (n; K4, P2; "meas") = $1.13 \times 10^{-12}\ s^{-1}$; (previous value: $0.784 \times 10^{-12}\ s^{-1}$)
$\dot{dpa}$ (γ; K4, P2; "meas") = $1.33 \times 10^{-12}\ s^{-1}$; (previous value: $1.39 \times 10^{-12}\ s^{-1}$)

$\dot{dpa}$ (n; K4, P10; "meas") =$1.60 \times 10^{-12}\ s^{-1}$; (previous value: $1.01\ 10^{-12}\ s^{-1}$)
$\dot{dpa}$ (γ; K4, P10; "meas") =$7.87 \times 10^{-13}\ s^{-1}$; (previous value: $1.13 \times 10^{-12}\ s^{-1}$)

The previous gamma-induced dpa rates, given in parentheses, which were obtained by an approximate approach described in ORNL/TM-2008/007, are no longer needed. The previous values of the neutron-induced dpa rates are also superseded by the values from the reanalysis.

Table B.1 in [6] identifies the capsules tested to obtain values of ΔNDTT. Estimation of the dpa values corresponding to each of the ΔNDTT values for the HB-1 and HB-4 nozzle material follows:

E.5.1 1969 (Δt = 2.34 EFPY)

With reference to Table E.4, the capsules removed for testing were from K1, P1, 6 and K4, P1, 6. Because of symmetry about the horizontal axis of K1 and K4, the indicated position numbers are such

that the same average dpa values would be obtained if P1 and 10 had been used (P6 and 10 are symmetrical).

As mentioned previously, dosimetry is available from K4, P2 and 10. A transposition of dosimetry will be made from P2 to P1 so that "measured" values are available for both P1 and 10. Using Eq. (E.1),

$$\dot{dpa}\left(n,\gamma;K4,P1;"meas."\right)=\dot{dpa}\left(n,\gamma;K4,P2;"meas."\right)$$
$$\times\,\dot{dpa}\left(n,\gamma;K4,P1;calc\right)/\,\dot{dpa}\left(n,\gamma;K4,P2;calc\right)$$

Substituting the values of $\dot{dpa}$ (n,γ; K4, P2, 10; "*meas.*") from Table E.1, and $\dot{dpa}$ (n,γ; K4, P1,P2; *calc*)
values from Table E.6,

$\dot{dpa}$ (n; K4, P1; "meas") = 1.13×10^{-12} s^{-1} × 1.30×10^{-12} s^{-1} /1.27 10^{-12} s^{-1} = 1.16×10^{-12} s^{-1}
(previous value: 0.803×10^{-12} s^{-1})

$\dot{dpa}$ (γ; K4, P1; "meas") = 1.33×10^{-12} s^{-1} × 1.24×10^{-12} s^{-1} /1.30 10^{-12} s^{-1} = 1.27×10^{-12} s^{-1}
(previous value: 1.33×10^{-12} s^{-1})

Thus, for Δt = 2.34 EFPY

dpa (n; K4,P1) = 1.16×10^{-12} s^{-1} × 2.34 EFPY × 3.15×10^{7} s/EFPY = 0.855×10^{-4}
(previous value: 0.592×10^{-4})
dpa (γ; K4,P1) = 1.27×10^{-12} s^{-1} × 2.34 EFPY × 3.15×10^{7} s/EFPY = 0.936×10^{-4}
(previous value: 0.980×10^{-4})

dpa (n; K4,P10) = 1.60×10^{-12} s^{-1} × 2.34 EFPY × 3.15×10^{7} s/EFPY = 1.18×10^{-4}
(previous value: 0.744×10^{-4})
dpa (γ; K4,P10) = 0.787×10^{-12} s^{-1} × 2.34 EFPY × 3.15×10^{7} s/EFPY = 0.580×10^{-4}
(previous value: 0.833×10^{-4})

dpa (n; K4, $\overline{P1,10}$) = $(0.855 + 1.18) \times 10^{-4} / 2 = 1.02 \times 10^{-4}$ (previous value: 0.688×10^{-4})

dpa (γ, K4, $\overline{P1,10}$) = $(0.936 + 0.580) \times 10^{-4} / 2 = 0.758 \times 10^{-4}$ (previous value: 0.907×10^{-4})

dpa(n + γ) = $(1.02 + 0.758) \times 10^{-4} = 1.78 \times 10^{-4}$ (previous value; 1.60×10^{-4})

E.5.2 1974 (Δt = 6.45 EFPY)

With reference to Table E.4, the capsules removed for testing were from K1, P4, 9 and K4, P4, 9. For the reasons mentioned earlier, the same dose would be achieved with capsules at K4, P2, 9. Dosimetry is from K4, P2, 10 and because of symmetry about the horizontal midplane, and because of the reverse order of numbering the capsule positions for K1 and K4 (see Fig. 2 of [6]), the following equalities exist regarding $\dot{dpa}\left(n,\gamma\right)$:

K4, P4 = K4, P2 = K1, P7 = K1, P9, and
K4, P9 = K4, P7 = K1, P4 = K1, P2.

Because of these equalities, only the K4, P4, 9 data need to be considered in determining the dose for each of the four capsules removed for testing.

A transposition of dosimetry will be made from K4, P10 to K4, P9.
Using Eq. (E.1),

$$\dot{dpa}\left(n,\gamma;K4,P9;"meas."\right)=\dot{dpa}\left(n,\gamma;K4,P10;"meas."\right)$$
$$\times\,\dot{dpa}\left(n,\gamma;K4,P9;calc\right)/\,\dot{dpa}\left(n,\gamma;K4,P10;calc\right)$$

Substituting $\dot{dpa}$ (n, "meas") values from Table E.1 (from year 1993), $\dot{dpa}$ (n, γ; calc) values from Table E.6, and $\dot{dpa}$ (γ, "meas") values from above,

$\dot{dpa}$ (n; K4, P9; "meas") = $1.60 \times 10^{-12}s^{-1} \times 2.30 \times 10^{-12}s^{-1} / (1.81 \times 10^{-12}s^{-1}) = 2.03 \times 10^{-12}s^{-1}$
(previous value: $1.28 \times 10^{-12}s^{-1}$)

$\dot{dpa}$ (γ; K4, P9; "meas") = $0.787 \times 10^{-12}s^{-1} \times 1.00 \times 10^{-12}s^{-1} / (1.06 \times 10^{-12}s^{-1}) = 0.742 \times 10^{-12}s^{-1}$
(previous value: $1.07 \times 10^{-12}s^{-1}$)

$\dot{dpa}$ (n; K4, P4; "meas") = $\dot{dpa}$ (n; K4, P2; "meas") = $1.13 \times 10^{-12}\,s^{-1}$
(previous value: $0.784 \times 10^{-12}\,s^{-1}$)

$\dot{dpa}$ (γ; K4, P4; "meas") = $\dot{dpa}$ (γ; K4, P2; "meas") = $1.33 \times 10^{-12}\,s^{-1}$
(previous value: $1.39 \times 10^{-12}\,s^{-1}$)

The average dpa for the two capsules must be used. Therefore,

dpa (n; K4, $\overline{P4,9}$) = $(1.13 + 2.03) \times 10^{-12}s^{-1} \times$ 6.45 EFPY $\times 3.15 \times \times 10^{7}$ s/EFPY / 2= 3.21×10^{-4}
(previous value: 2.04×10^{-4})

dpa (γ; K4, $\overline{P4,9}$) = $(1.33 + 0.742) \times 10^{-12}s^{-1} \times$ 6.45 EFPY $\times 3.15 \times 10^{7}$ s/EFPY / 2= 2.10×10^{-4}
(previous value: 2.50×10^{-4})

dpa(n + γ) = $(3.21 + 2.10) \times 10^{-4} = 5.31 \times 10^{-4}$ (previous value 4.54×10^{-4})

Note that there is a large spread in dpa(n) and dpa(γ) of the capsules averaged in a single data point.

E.5.3 1983 (Δ*t* = 15.01 EFPY)

With reference to Table E.4, the capsules removed for testing were from K1, P2, and K4, P2. Dosimetry is available from K4, P2, 10. K1, P2 is the same as K4, P9. Dosimetry was transposed from K4, P10 to K4, P9 in Sect. E.5.2. Thus,

$\dot{dpa}$ (n; K4, P2; "meas") = $1.13 \times 10^{-12}s^{-1}$ (previous value: $0.784 \times 10^{-12}s^{-1}$)

$\dot{dpa}$ (γ; K4, P2; "meas") = $1.33 \times 10^{-12} s^{-1}$ (previous value: $1.39 \times 10^{-12} s^{-1}$)

$\dot{dpa}$ (n; K1, P2; "meas") = $\dot{dpa}$ (n; K4, P9; "meas") = $2.03 \times 10^{-12} s^{-1}$
(previous value: $1.28 \times 10^{-12} s^{-1}$; see Sect. 5.2)

$\dot{dpa}$ (γ; K1, P2; "meas") = $\dot{dpa}$ (γ; K4, P9; "meas") = $0.742 \times 10^{-12} s^{-1}$
(previous value: $1.07 \times 10^{-12} s^{-1}$; see Sect. 5.2)

dpa (n; K4, $\overline{P2,9}$) = $(1.13 + 2.03) \times 10^{-12} s^{-1} \times 15.01 \times 3.15 \times \times 10^{7} / 2 = 7.47 \times 10^{-4}$
(previous value: 4.88×10^{-4})

dpa (γ; K4, $\overline{P2,9}$) = $(1.33 + 0.742) \times 10^{-12} s^{-1} \times 15.01 \times 3.15 \times 10^{7} / 2 = 4.90 \times 10^{-4}$
(previous value: 5.81×10^{-4})

dpa (n + γ) = $(7.47 + 4.90) \times 10^{-4} = 12.4 \times 10^{-4}$ (previous value 10.69×10^{-4})

E.5.4 1986 (Δt = 17.53 EFPY)

With reference to Table E.4, the capsules removed for testing were from K1, P3 and K4, P3, 8. Dosimetry is from K4, P2, 10. With reference to Fig. 2 in [6], K1, P3 and K4, P8 are exposed to the same dose rate, while K4, P3 is on the opposite side. Key 4, P2 will be transposed to K4, P3, and K4, P10 will be transposed to K4, P8, in both cases using the neutron and gamma dosimetry data in Table E.1, and the calculated values of $\dot{dpa}$ in Table E.6. Applying Eq. (E.1),

$$\dot{dpa}\left(n,\gamma;K4,P3;"meas."\right) = \dot{dpa}\left(n,\gamma;K4,P2;"meas."\right) \times \dot{dpa}\left(n,\gamma;K4,P3;calc\right) / \dot{dpa}\left(n,\gamma;K4,P2;calc\right)$$

$\dot{dpa}$ (n; K4, P3; "meas") = $1.13 \times 10^{-12} s^{-1} \times 1.25 \times 10^{-12} s^{-1} / 1.27 \times 10^{-12} s^{-1} = 1.11 \times 10^{-12} s^{-1}$
(previous value: $0.772 \times 10^{-12} s^{-1}$)

$\dot{dpa}$ (γ; K4, P3; "meas") = $1.33 \times 10^{-12} s^{-1} \times 1.32 \times 10^{-12} s^{-1} / 1.30 \times 10^{-12} s^{-1} = 1.35 \times 10^{-12} s^{-1}$
(previous value: $1.41 \times 10^{-12} s^{-1}$)

$$\dot{dpa}\left(n,\gamma;K4,P8;"meas."\right) = \dot{dpa}\left(n,\gamma;K4,P10;"meas."\right) \times \dot{dpa}\left(n,\gamma;K4,P8;calc\right) / \dot{dpa}\left(n,\gamma;K4,P10;calc\right)$$

$\dot{dpa}$ (n; K4, P8; "meas") = $1.60 \times 10^{-12} s^{-1} \times 2.49 \times 10^{-12} s^{-1} / 1.81 \times 10^{-12} s^{-1} = 2.20 \times 10^{-12} s^{-1}$
(previous value: $1.39 \times 10^{-12} s^{-1}$)

$\dot{dpa}$ (γ; K4, P8; "meas") = $0.787 \times 10^{-12} s^{-1} \times 0.978 \times 10^{-12} s^{-1} / 1.06 \times 10^{-12} s^{-1} = 0.726 \times 10^{-12} s^{-1}$
(previous value: $1.04 \times 10^{-12} s^{-1}$)

dpa (n; K4, $\overline{P3,8,8}$) = (1.11 + 2 × 2.20) × 10^{-12} s^{-1} × 17.5 EFPY × 3.15 × 10^{7} s/EFPY / 3= 10.1 × 10^{-4}
(previous value: 6.53 × 10^{-4})

dpa (γ; K4, $\overline{P3,8,8}$) = (1.35 + 2 × 0.726) × 10^{-12} s^{-1} × 17.5 EFPY × 3.15 × 10^{7} s/EFPY / 3= 5.15 × 10^{-4}
(previous value: 6.41 × 10^{-4})

dpa (n) + dpa (γ) = (10.1 + 5.15) × 10^{-4} = 15.3 × 10^{-4}
(previous value: 12.9 × 10^{-4}

E.6 VESSEL SHELL MATERIAL (A212B(LT), $NDTT_0$= -5°F)

As indicated in Table E.5, CVN data for A212B(LT) are available from K5, 6 and 7, as well as from key 2W, and dosimetry-data are available from K7, P1, 5 (Table E.1).

For K7, P5 (Table E.1),

$\dot{dpa}$ (n; K7, P5; "meas") = 0.299 × $10^{-12}s^{-1}$ (previous value: 0.279 × $10^{-12}s^{-1}$)

$\dot{dpa}$ (γ; K7, P5; "meas") = 1.34 × $10^{-12}s^{-1}$ (previous value: 1.44 × $10^{-12}s^{-1}$)

For K7, P1 (Table E.1),

$\dot{dpa}$ (n; K7, P1; "meas") = 0.138 × $10^{-12}s^{-1}$ (previous value: 0.134 × $10^{-12}s^{-1}$)

$\dot{dpa}$ (γ; K7, P1; "meas") = 1.13 × $10^{-12}s^{-1}$ (previous value: 1.17 × $10^{-12}s^{-1}$)

"Measured" values of dpa are estimated as follows.

E.6.1 1983 (Δt = 15.01 EFPY)

With reference to Table E.5, the capsules removed for testing were from K5, P1; K6, P1; and K7, P7. CVN specimens from K5, P1 were used to estimate a value of ΔNDTT, and the CVN specimens from the other two keys were used to estimate an additional value of ΔNDTT (see Table D.5 and Figs. D.4 and D.5 in [2]). Dosimetry is available from K7 (Table E.1) but not from K5.

As indicated on page 15 of [1], Key 5 was included in the surveillance program to determine if the displacement of water shielding by the IG3 ion chamber and its surrounding lead shield would increase the fast neutron flux at the vessel wall, behind IG3, above that at the elevation of the core horizontal mid-plane. Because of the lack of dosimetry for K5 and the complex geometry introduced by the ion chamber, no attempt has been made to calculate $\dot{dpa}$ at that location. Furthermore, the value of ΔNDTT deduced from the three CVN specimens removed from K5, P1 in 1983 is much less than those obtained from K6, P1 and K7, P7 (25°F compared to 52°F). This result satisfied the concern, and no effort has been made to establish a corresponding value of dpa. As indicated in Appendix C of [28], the remaining capsules in K5 were transferred to K2W in 2001 and have not yet been removed for testing.

With reference to Fig. 2 in [6], K6, P1 is essentially the same as K7, P8. Thus, in effect, the positions for which an average dpa value must be obtained are K7, P7, 8.

As mentioned earlier, dosimetry is available from K7, P1 and K7, P5. Key 7, P1 dosimetry was obtained in 2004, when the HB-4 beam tube was not installed, and K7, P1 is further away from K7, P7, 8, and the centerline of HB-4, both of which tend to reduce $\dot{dpa}$ at K7, P1 relative to that at K7, P5, where the dosimetry was measured in 1993 with the HB-4 beam tube in place. Thus, only the dosimetry from K7, P5 is used in the estimation of $\dot{dpa}$ for K7, P7, 8. The estimation is as follows, using Eq. (E.1).

$$\begin{aligned}\dot{dpa}\left(n,\gamma;K7,P7;"meas."\right) &= \dot{dpa}\left(n,\gamma;K7,P5;"meas."\right)\\ &\times \dot{dpa}\left(n,\gamma;K7,P7;calc\right)/\dot{dpa}\left(n,\gamma;K7,P5;calc\right)\end{aligned} \tag{B.9}$$

$$\begin{aligned}\dot{dpa}\left(n,\gamma;K7,P8;"meas."\right) &= \dot{dpa}\left(n,\gamma;K7,P5;"meas."\right)\\ &\times \dot{dpa}\left(n,\gamma;K7,P8;calc\right)/\dot{dpa}\left(n,\gamma;K7,P5;calc\right)\end{aligned} \tag{B.10}$$

Using the calculated values in Table E.6 and the previous dosimetry values from K7, P5,

$\dot{dpa}$ (n; K7, P7; "meas") = $0.299 \times 10^{-12}\ s^{-1} \times 0.445 \times 10^{-12}\ s^{-1} / 0.372 \times 10^{-12}\ s^{-1} = 0.358 \times 10^{-12}\ s^{-1}$
(previous value: $0.334 \times 10^{-12}\ s^{-1}$)

$\dot{dpa}$ (γ; K7, P7; "meas") = $1.34 \times 10^{-12}\ s^{-1} \times 1.85 \times 10^{-12}\ s^{-1} / 1.70 \times 10^{-12}\ s^{-1} = 1.46 \times 10^{-12}\ s^{-1}$
(previous value: $1.57\times 10^{-12}\ s^{-1}$)

$\dot{dpa}$ (n; K7, P8; "meas") = $0.299 \times 10^{-12}\ s^{-1} \times 0.520 \times 10^{-12}\ s^{-1} / 0.372 \times 10^{-12}\ s^{-1} = 0.418 \times 10^{-12}\ s^{-1}$
(previous value: $0.390 \times 10^{-12}\ s^{-1}$)

$\dot{dpa}$ (γ; K7, P8; "meas") = $1.34 \times 10^{-12}\ s^{-1} \times 1.83 \times 10^{-12}\ s^{-1} /1.70 \times 10^{-12}\ s^{-1} = 1.44 \times 10^{-12}\ s^{-1}$
(previous value: $1.55\times 10^{-12}\ s^{-1}$)

dpa (n; K7, $\overline{P7,8}$) = $(0.358 + 0.418) \times 10^{-12}\ s^{-1} \times 15.01$ EFPY $\times 3.15 \times 10^{7}$ s/EFPY/ 2= 1.84×10^{-4}
(previous value 1.71×10^{-4})

dpa (γ; K7, $\overline{P7,8}$) = $(1.46 + 1.44) \times 10^{-12}\ s^{-1} \times 15.01$ EFPY $\times 3.15 \times 10^{7}$ s/EFPF/ 2= 6.86×10^{-4}
(previous value: 7.38×10^{-4})

dpa (n) + dpa (γ) = $(1.84 + 6.86) \times 10^{-4} = 8.70 \times 10^{-4}$
(previous value: 9.09×10^{-4})

E.6.2 1986 (Δt = 17.53 EFPY)

With reference to Table E.5, the capsules removed for testing were from K6, P2 and 3 and K7, P6 and 8. Dosimetry is available from K7, P5 and K7, P1.

As indicated in Fig. 2 of [6], K6, P3 is nearly the same as K7, P6, and K6, P2 is nearly the same as K7, P7. Thus, the "measured" $\dot{dpa}$ values for the corresponding value of ΔNTT is the average for K7, P(6, 6, 7, 8). In view of this, and for the same reasons discussed in Sect. E.6.1, the most appropriate dosimetry is from K7, P5.

Estimated values of dpa(n,γ) were obtained as follows, using Eq.1 and appropriate substitutions for K7 positions:

$\dot{dpa}$ (n; K7, P6; "meas") = $0.299 \times 10^{-12}s^{-1} \times 0.394 \times 10^{-12}s^{-1} / 0.372 \times 10^{-12}s^{-1} = 0.317 \times 10^{-12}s^{-1}$
(previous value: $0.296 \times 10^{-12}s^{-1}$)

$\dot{dpa}$ (γ; K7, P6; "meas") = $1.34 \times 10^{-12}\, s^{-1} \times 1.76 \times 10^{-12}\, s^{-1} / 1.70 \times 10^{-12}\, s^{-1} = 1.39 \times 10^{-12}\, s^{-1}$
(previous value: $1.49\times 10^{-12}\, s^{-1}$)

$\dot{dpa}$ (n; K7, P7; "meas") = $0.299 \times 10^{-12}\, s^{-1} \times 0.445 \times 10^{-12}\, s^{-1} / 0.372 \times 10^{-12}\, s^{-1} = 0.358 \times 10^{-12}\, s^{-1}$
(previous value: $0.334 \times 10^{-12}\, s^{-1}$)

$\dot{dpa}$ (γ; K7, P7; "meas") = $1.34 \times 10^{-12}\, s^{-1} \times 1.85 \times 10^{-12}\, s^{-1} / 1.70 \times 10^{-12}\, s^{-1} = 1.46 \times 10^{-12}\, s^{-1}$
(previous value: $1.57\times 10^{-12}\, s^{-1}$)

$\dot{dpa}$ (n; K7, P8; "meas") = $0.299 \times 10^{-12}\, s^{-1} \times 0.520 \times 10^{-12}\, s^{-1} / 0.372 \times 10^{-12}\, s^{-1} = 0.418 \times 10^{-12}\, s^{-1}$
(previous value: $0.390 \times 10^{-12}\, s^{-1}$)

$\dot{dpa}$ (γ; K7, P8; "meas") = $1.34 \times 10^{-12}\, s^{-1} \times 1.83 \times 10^{-12}\, s^{-1} /1.70 \times 10^{-12}\, s^{-1} = 1.44 \times 10^{-12}\, s^{-1}$
(previous value: $1.55 \times 10^{-12}\, s^{-1}$)

dpa (n; K7, $\overline{P6,6,7,8}$) = $(2 \times 0.317+ 0.358 + 0.418) \times 10^{-12}s^{-1} \times 17.53$ EFPY ×
3.15×10^{7} s/EFPY / 4= 1.95×10^{-4}
(previous value: 1.82×10^{-4})

dpa (γ; K7, $\overline{P6,6,7,8}$) = $(2 \times 1.39 + 1.46+ 1.44) \times 10^{-12}s^{-1} \times 17.53$ EFPY ×
$3.15 \times 10^{7} / 4= 7.84 \times 10^{-4}$
(previous value: 8.42×10^{-4})

dpa (n + γ) = $(1.95 + 7.84) \times 10^{-4} = 9.79 \times 10^{-4}$
(previous value: 10.2×10^{-4})

E.6.3 1993 (*Δt* = 17.53 + 1.69 = 19.22 EFPY)

With reference to Table E.5, the capsules removed for testing were from K6, P4, 5, 7, and 8 and K7, P1, 4. Capsule HB-1A-64 was irradiated at K6, P7 for 17.53 EFPY and then at K6, P4 for 1.69 EFPY; capsule HB-1A-71 was irradiated at K6, P8 for 17.53 EFPY and then at K6, P5 for 1.69 EFPY; and

capsule HB-4A-76 was irradiated at K7, P1 for 17.53 EFPY and then at K7, P4 for 1.69 EFPY. Dosimetry is available from K7, P1, 5 (Table E.1).

As indicated in Fig. 2 of [6], K6, P4 is essentially the same as K7, P5; K6, P5 is essentially the same as K7, P4; K6, P7 is essentially the same as K7, P2; and K6, P8 is essentially the same as K7, P1. Thus, the effective capsule locations are as follows:

Capsule ID	Effective location (K,P) Irradiation time (EFPY)		ΣP
	17.53	1.69	
HB-1A-64	K7, P2	K7, P5	(2+5)
HB-1A-71	K7, P1	K7, P4	} 2(1+4)
HB-4A-76	K7, P1	K7, P4	

The "measured" dpa value for the corresponding value of ΔNDTT is the average for K7, P(2 (1+4), (2+5)), where P(1+4) represents the total irradiation for capsules HB-4A-76 and HB-1A-71, and P(2+5) represents the total irradiation for capsule HB-1A-64. Dosimetry data from K7, P5 was used for K7 positions because, as mentioned in Sect. E.6.1, the HB-4 beam tube was not in place when the K7, P1 dosimetry data were obtained.

Estimated values of dpa(n,γ) were obtained as follows, using Eq. E.1 and making appropriate substitutions for the K7 positions. The first value of $\dot{dpa}$ entered in the equation is the dosimetry value for K7, P5 from Table E.1; the second value entered is the calculated value for the indicated position; and the third value entered is the calculated value for K7, P5. The exponents for the calculated values are $10^{-12}$and are omitted since they cancel.

$\dot{dpa}$ (n; K7, P1; "meas") = $0.299 \times 10^{-12}\ s^{-1} \times 0.261/0.372 = 0.210 \times 10^{-12}\ s^{-1}$
(previous value: $0.196 \times 10^{-12}\ s^{-1}$)
$\dot{dpa}$ (γ; K7, P1; "meas") = $1.34 \times 10^{-12}\ s^{-1} \times 1.93/1.70 = 1.52 \times 10^{-12}\ s^{-1}$
(previous value: $1.63 \times 10^{-12} s^{-1}$)

$\dot{dpa}$ (n; K7, P2; "meas") = $0.299 \times 10^{-12}\ s^{-1} \times 0.306/0.372 = 0.246 \times 10^{-12}\ s^{-1}$
(previous value: $0.230 \times 10^{-12}\ s^{-1}$)
$\dot{dpa}$ (γ; K7, P2; "meas") = $1.34 \times 10^{-12}\ s^{-1} \times 1.85/1.70 = 1.46 \times 10^{-12}\ s^{-1}$
(previous value: $1.57 \times 10^{-12} s^{-1}$)

$\dot{dpa}$ (n; K7, P4; "meas") = $0.299 \times 10^{-12}\ s^{-1} \times 0.357/0.372 = 0.287 \times 10^{-12}\ s^{-1}$
(previous value: $0.268 \times 10^{-12}\ s^{-1}$)
$\dot{dpa}$ (γ; K7, P4; "meas") = $1.34 \times 10^{-12}\ s^{-1} \times 1.81/1.70 = 1.43 \times 10^{-12}\ s^{-1}$
(previous value: $1.53 \times 10^{-12}\ s^{-1}$)

$\dot{dpa}$ (n; K7, P5; "meas") = $0.299 \times 10^{-12}\ s^{-1}$
(previous value: $0.279 \times 10^{-12}\ s^{-1}$)
$\dot{dpa}$ (γ; K7, P5; "meas") = $1.34 \times 10^{-12}\ s^{-1}$
(previous value: $1.44 \times 10^{-12}\ s^{-1}$)

dpa (n; K7, $\overline{P2(1+4),(2+5)}$; Δt=17.53 + 1.69 =19.22 EFPY) =
=[(2 × 0.210 + 0.246) × 17.53 EFPY +(2 × 0.287 + 0.299) × 1.69 EFPY)] × 10^{-12} s^{-1}
× 3.15 × 10^{7} s/EFPY / 3 = 1.38 × 10^{-4}
(previous value 1.29 × 10^{-4})

dpa (γ; K7, $\overline{P2(1+4),(2+5)}$; Δt=17.53 + 1.69 =19.22 EFPY) =
=[(2 × 1.52 + 1.46) × 17.53 EFPY + (2 × 1.43 + 1.34)× 1.69 EFPY)] × 10^{-12} s^{-1}
× 3.15 × 10^{7} s/EFPY/ 3 = 9.03 × 10^{-4}
(previous value: 9.69 × 10^{-4})

dpa (n + γ) = 1.38 × 10^{-4} + 9.03 × 10^{-4}= 10.4 × 10^{-4}
(previous value: 11.0 × 10^{-4})

E.6.4 2009 (*Δt* = 17.53 + 5.16 + 2.31 (2.25) = 25.0 (24.9) EFPY)

Capsules HB-1A-62, HB-1A-65, and HB-1A-70: with time of irradiation, dpa rates and scaling factors from Table E.7.

<u>HB-1A-62</u>:

K6, P5; Δ*t* = 17.53 EFPY

dpa(n+γ) = (0.308 × 0.803 + 1.72 × 0.791) × 10^{-12} s^{-1} × 17.53 EFPY ×
3.15 × 10^{7} s/EFPY = (1.37 + 7.51) × 10^{-4} = 8.88 × 10^{-4}

K6, P2; Δ*t* = 5.16 EFPY

dpa(n+γ) = (0.441 × 0.803 + 1.95 × 0.791) × 10^{-12} s^{-1} × 5.16 EFPY×
3.15 × 10^{7} s/EFPY = (0.58 + 2.51) × 10^{-4} = 3.08 × 10^{-4}

K2W, P6; Δ*t* = 2.31 EFPY

dpa(n+γ) = (4.30 + 2.17) × 10^{-12} s^{-1} × 2.31 EFPY × 3.15 × 10^{7} s/EFPY =
= (3.13 + 1.58) × 10^{-4} = 4.71 × 10^{-4}

Total dpa(n+γ) = ((1.37 + 0.58 + 3.13) + (7.51 + 2.51 + 1.58)) × 10^{-4} =
= (5.08 + 11.6) × 10^{-4} = 16.7 × 10^{-4}

<u>HB-1A-65</u>:

K6, P6; Δ*t* = 17.53 EFPY

dpa(n+γ) = (0.296 × 0.803 + 1.78 × 0.791) × 10^{-12} s^{-1} × 17.53 EFPY
× 3.15 × 10^{7} s/EFPY = (1.31 + 7.77) × 10^{-4} = 9.08 × 10^{-4}

K6, P3; Δ*t* = 5.16 EFPY

dpa(n+γ) = (0.409 × 0.803 + 1.81 × 0.791) × 10^{-12} s^{-1} × 5.16 EFPY ×
3.15 × 10^{7} s/EFPY = (0.53 + 2.33) × 10^{-4} = 2.86 × 10^{-4}

K2W, P7; Δ*t* = 2.31 EFPY

$dpa(n+\gamma) = (4.24 + 2.14) \times 10^{-12}\ s^{-1} \times 2.31\ EFPY \times$
$3.15 \times 10^{7}\ s/EFPY = (3.09 + 1.56) \times 10^{-4} = 4.64 \times 10^{-4}$
Total $dpa(n+\gamma) = ((1.31 + 0.53 + 3.09) + (7.77 + 2.33 + 1.56)) \times 10^{-4} =$
$= (4.93 + 11.7) \times 10^{-4} = 16.6 \times 10^{-4}$

<u>HB-1A-70</u>:

K6, P4; $\Delta t = 17.53$ EFPY

$dpa(n+\gamma) = (0.349 \times 0.803 + 1.64 \times 0.791) \times 10^{-12}\ s^{-1} \times 17.53\ EFPY \times$
$3.15 \times 10^{7}\ s/EFPY = (1.55 + 7.16) \times 10^{-4} = 8.71 \times 10^{-4}$

K6, P1; $\Delta t = 5.16$ EFPY

$dpa(n+\gamma) = (0.485 \times 0.803 + 1.76 \times 0.791) \times 10^{-12}\ s^{-1} \times 5.16\ EFPY \times$
$3.15 \times 10^{7}\ s/EFPY = (0.63 + 2.26) \times 10^{-4} = 2.90 \times 10^{-4}$

K2W, P8; $\Delta t = 2.25$ EFPY

$dpa(n+\gamma) = (4.22 + 2.13) \times 10^{-12}\ s^{-1} \times 2.25\ EFPY \times 3.15 \times 10^{7}\ s/EFPY =$
$= (2.99 + 1.51) \times 10^{-4} = 4.50 \times 10^{-4}$
Total $dpa(n+\gamma) = ((1.55 + 0.63 + 2.99) + (7.16 + 2.26 + 1.51)) \times 10^{-4} =$
$= (5.17 + 10.9) \times 10^{-4} = 16.1 \times 10^{-4}$

The average total (neutron + gamma) dpa for the capsules HB-1A-62, HB-1A-65, and HB-1A-70 is:

$dpa(n+\gamma) = ((5.08 + 4.93 + 5.17) + (11.6 + 11.7 + 10.9)) \times 10^{-4} / 3.0 =$
$(15.2 + 34.2) \times 10^{-4} / 3.0 = (5.07 + 11.4) \times 10^{-4} = 16.5 \times 10^{-4}$

E.7 (VESSEL SHELL MATERIAL (A212B(LS), $NDTT_0$= -5°F)

Capsules containing vessel shell material A212B(LS) were removed in 2009.

E.7.1 2009 (Δt = 5.16 + 2.31 = 7.47 EFPY)

Capsules LS-1-1, LS-1-2, LS-1-3: with irradiation times, dpa rates, and scaling factors from Table E.7:

<u>LS-1-1</u>:

K1, P1; $\Delta \mathbf{t} = 5.16$ EFPY

$dpa(n+\gamma) = (1.81 \times 0.890 + 1.06 \times 0.884) \times 10^{-12}\ s^{-1} \times 5.16\ EFPY$
$\times 3.15 \times 10^{7}\ s/EFPY = (2.62 + 1.52) \times 10^{-4} = 4.14 \times 10^{-4}$

K2W, P23; $\Delta t = 2.31$ EFPY

$dpa(n+\gamma) = (5.34 + 2.69) \times 10^{-12}\ s^{-1} \times 2.31\ EFPY \times 3.15 \times 10^{7}\ s/EFPY =$
$= (3.89 + 1.96) \times 10^{-4} = 5.85 \times 10^{-4}$
Total $dpa(n+\gamma) = ((2.62 + 3.89) + (1.52 + 1.96)) \times 10^{-4} = (6.51 + 3.48) \times 10^{-4} =$
$= 9.99 \times 10^{-4}$

LS-1-2:

K1, P6; Δt = 5.16 EFPY

$$dpa(n+\gamma) = (1.30 \times 0.890 + 1.24 \times 0.884) \times 10^{-12}\ s^{-1} \times 5.16\ EFPY \times 3.15 \times 10^{7}\ s/EFPY = (1.88 + 1.78) \times 10^{-4} = 3.66 \times 10^{-4}$$

K2W, P24; Δt = 2.31 EFPY

$$dpa(n+\gamma) = (5.10 + 2.58) \times 10^{-12}\ s^{-1} \times 2.31\ EFPY \times 3.15 \times 10^{7}\ s/EFPY = (3.71 + 1.88) \times 10^{-4} = 5.59 \times 10^{-4}$$

$$\text{Total } dpa(n+\gamma) = ((1.88 + 3.71) + (1.78 + 1.88)) \times 10^{-4} = (5.59 + 3.66) \times 10^{-4} = 9.25 \times 10^{-4}$$

LS-1-3:

K1, P10; Δt = 5.16 EFPY

$$dpa(n+\gamma) = (1.30 \times 0.890 + 1.24 \times 0.884) \times 10^{-12}\ s^{-1} \times 5.16\ EFPY \times 3.15 \times 10^{7}\ s/EFPY = (1.88 + 1.78) = 3.66 \times 10^{-4}$$

K2W, P25; Δt = 2.31 EFPY

$$dpa(n+\gamma) = (5.09 + 2.57) \times 10^{-12}\ s^{-1} \times 2.31\ EFPY \times 3.15 \times 10^{7}\ s/EFPY = (3.70 + 1.87) \times 10^{-4} = 5.57 \times 10^{-4}$$

$$\text{Total } dpa(n+\gamma) = ((1.88 + 3.70) + (1.78 + 1.87)) = (5.58 + 3.65) \times 10^{-4} = 9.23 \times 10^{-4}$$

The average total (neutron +gamma) dpa for the capsules LS-1-1, LS-1-2, and LS-1-3 is:

$$dpa(n+\gamma) = ((6.51 + 5.59 + 5.58) + (3.48 + 3.66 + 3.65)) \times 10^{-4} / 3.0 = (5.89 + 3.60) \times 10^{-4} = 9.49 \times 10^{-4}$$

E.8 NOZZLE WELD MATERIAL ($NDTT_0$ = 0°F)

Capsules containing nozzle-weld material were removed for testing in 1993 and 2009.

E.8.1 1993 (Δt = 1.69 EFPY)

As indicated in Table E.5, these capsules were irradiated in K2, P2, 6, and 16, and the irradiation time was 1.69 EFPY. Dosimetry is available from K2, P9. From Table E.1:

$\dot{dpa}$ (n; K2, P9; "meas") = $3.09 \times 10^{-12}\ s^{-1}$ (previous value: $2.22 \times 10^{-12}\ s^{-1}$)
$\dot{dpa}$ (γ; K2, P9; "meas") = $1.28 \times 10^{-12}\ s^{-1}$ (previous value: $2.55 \times 10^{-12}\ s^{-1}$)

For Δt = 1.69 EFPY,

$$dpa\ (n;\ K2,\ \overline{P2,6,16}) = 3.09 \times 10^{-12}\ s^{-1} \times 1.69\ EFPY \times 3.15 \times 10^{7}\ s/EFPY = 1.65 \times 10^{-4}$$
(previous value 1.18×10^{-4})

dpa (γ; K2, $\overline{P2,6,16}$) = 1.28×10^{-12} s^{-1} $\times 1.69$ EFPY $\times 3.15 \times 10^{7}$ s/EFPY = 0.681×10^{-4}
(previous value 1.36×10^{-4})

Total dpa (n+γ) = $1.65 \times 10^{-4} + 0.68 \times 10^{-4} = 2.33 \times 10^{-4}$
(previous value: 2.54×10^{-4})

E.8.2 2009 (Δt = 5.16 + 2.31 = 7.47 EFPY)

Capsules NW-2-2 and NW-2-3, with time of irradiation, dpa rates, and scaling factors from Table E.7:

NW-2-2:

K2, P3; Δt = 5.16 EFPY

dpa(n+γ) = $(3.82 \times 0.809 + 1.52 \times 0.840) \times 10^{-12}$ s^{-1} $\times$ 5.16 EFPY
$\times 3.15 \times 10^{7}$ s/EFPY = $(5.02 + 2.08) \times 10^{-4} = 7.10 \times 10^{-4}$

K2W, P1; Δt = 2.31 EFPY

dpa(n+γ) = $(5.21 + 2.63) \times 10^{-12}$ s^{-1} $\times$ 2.31 EFPY $\times 3.15 \times 10^{7}$ s/EFPY
= $(3.79 + 1.91) \times 10^{-4} = 5.70 \times 10^{-4}$

Total dpa(n+γ) = $((5.02 + 3.79) + (2.08 + 1.91)) \times 10^{-4} = (8.81 + 3.99) \times 10^{-4}$
= 12.8×10^{-4}

NW-2-3:

K2, P5 Δt = 5.16 EFPY

dpa(n+γ) = $(3.82 \times 0.809 + 1.52 \times 0.840) \times 10^{-12}$ s^{-1} $\times$ 5.16 EFPY
$\times 3.15 \times 10^{7}$ s/EFPY = $(5.02 + 2.08) \times 10^{-4} = 7.10 \times 10^{-4}$

K2W, P2; Δt = 2.31 EFPY

dpa(n+γ) = $(5.32 + 2.69) \times 10^{-12}$ s^{-1} $\times$ 2.31 EFPY $\times 3.15 \times 10^{7}$ s/EFPY
= $(3.87 + 1.96)\ 10^{-4} = 5.83 \times 10^{-4}$

Total dpa(n+γ) = $((5.02 + 3.87) + (2.08 + 1.96)) \times 10^{-4} = (8.89 + 4.04) \times 10^{-4} =$
= 12.9×10^{-4}

The average total (neutron + gamma) dpa for the capsules NW-2-2 and NW-2-3 is:

dpa(n+γ) = $((8.81 + 8.89) + (3.99 + 4.04)) \times 10^{-4} / 2.0 = (8.85 + 4.02) \times 10^{-4}$
= 12.9×10^{-4}

E.9 SEAM WELD ($NDTT_0$ = -5°F)

Capsules containing seam-weld material were removed for testing in 1993 and 2009.

E.9.1 1993 (Δt = 1.69 EFPY)

As indicated in Table E.5, these capsules were irradiated in K1, P7, P8, and P9, and the irradiation time was 1.69 EFPY. Dosimetry is available from K4, P2 and P10.

From Table E.1:

$\dot{dpa}$ (n; K4, P2; "meas") = 1.13×10^{-12} s^{-1}
(previous value: 0.784×10^{-12} s^{-1})
$\dot{dpa}$ (γ; K4, P2; "meas") = 1.33×10^{-12} s^{-1}
(previous value from ORNL/TM-2008/007: 1.39×10^{-12} s^{-1})

$\dot{dpa}$ (n; K4, P10; "meas") = 1.60×10^{-12} s^{-1}
(previous value: 1.01 10^{-12} s^{-1})
$\dot{dpa}$ (γ; K4, P10; "meas") = 7.87×10^{-13} s^{-1}
(previous value from ORNL/TM-2008/007: 1.13×10^{-12} s^{-1})

Estimated values of dpa (n,γ) were obtained for K1, P7, P8, and P9 as follows: Because K1 and K4 are mirror images and the key position numbering systems are both clockwise, facing the keys from inside the vessel, K4, P2 is the same as K1, P9, which is the same as K1, P7 because of symmetry about the horizontal midplane. Because symmetry does not exist about the vertical centerline, K4, P10 is not the same as either K1, P7, P8, or P9. Thus, only dosimetry from K4, P2 will be used. Using Eq. (E.1), K4, P2 dosimetry in Table E.1 and the calculated values of $\dot{dpa}$ (n,γ) in Table E.6 for K4, P2, P3 and P4,

$\dot{dpa}$ (n; K1, P7,9; "meas") = 1.13×10^{-12} s^{-1}
(previous value: 0.784×10^{-12} s^{-1})
$\dot{dpa}$ (γ; K1, P7;9 "meas") = 1.33×10^{-12} s^{-1}
(previous value from ORNL/TM-2008/007: 1.39×10^{-12} s^{-1})

$\dot{dpa}$ (n; K1, P8; "meas") = 1.13×10^{-12} s^{-1} $\times 1.25 / 1.27 = 1.11 \times 10^{-12}$ s^{-1}
(previous value: 0.772×10^{-12} s^{-1})
$\dot{dpa}$ (γ; K1, P8; "meas") = 1.33×10^{-12} s^{-1} $\times 1.32 / 1.30 = 1.35 \times 10^{-12}$ s^{-1}
(previous value: 1.41×10^{-12} s^{-1})

For Δt = 1.69 EFPY,

dpa (n; K1, $\overline{\text{P7,8,9}}$) = $(2 \times 1.13 + 1.11) \times 10^{-12}$ s^{-1} $\times$ 1.69 EFPY $\times 3.15 \times 10^{7}$ s/EFPY /3 = 0.598×10^{-4}
(previous value: 0.415×10^{-4})

dpa (γ; K1, $\overline{\text{P7,8,9}}$) = $(2 \times 1.33 + 1.35) \times 10^{-12}$ s^{-1} $\times$ 1.69 EFPY $\times 3.15 \times 10^{7}$ s/EFPY /3 = 0.712×10^{-4}
(previous value: 0.744×10^{-4})

dpa (n + γ) = $0.598 \times 10^{-4} + 0.712 \times 10^{-4} = 1.31 \times 10^{-4}$
(previous value: 1.16×10^{-4})

E.9.2 2009 (Δt = 5.16 + 2.41 = 7.57 EFPY)

Capsules SW-6-4, SW-6-5, and SW-6-6; with time of irradiation, dpa rates, and scaling factors from Table E.7:

<u>SW-6-4</u>:

K6, P6; Δt = 5.16 EFPY, t < 22.7 EFPY; Δt = 2.41 EFPY, t > 22.7 EFPY

$$dpa(n+\gamma) = (0.309 + 1.78 \times 0.791) \times 10^{-12} \times (5.16 + 2.41) \times 3.15 \times 10^{7}$$
$$= (0.737 + 3.36) \times 10^{-4} = 4.10 \times 10^{-4}$$

<u>SW-6-5</u>:

K6, P7; Δt = 5.16 EFPY

$$dpa(n+\gamma) = (0.280 + 1.76 \times 0.791) \times 10^{-12} \times 5.16 \times 3.15 \times 10^{7}$$
$$= (0.455 + 2.26) \times 10^{-4} = 2.72 \times 10^{-4}$$

K6, P5; Δt = 2.41 EFPY

$$dpa(n+\gamma) = (0.316 + 1.72 \times 0.791) \times 10^{-12} \times 2.41 \times 3.15 \times 10^{7}$$
$$= (0.240 + 1.03) \times 10^{-4} = 1.27 \times 10^{-4}$$

Total $dpa(n+\gamma) = ((0.455 + 0.240) + (2.26 + 1.03)) \times 10^{-4} =$
$= (0.695 + 3.29) \times 10^{-4} = 3.99 \times 10^{-4}$

<u>SW-6-6</u>:

K6, P8; Δt = 5.16 EFPY, t < 22.7 EFPY; Δt = 2.41 EFPY, t > 22.7 EFPY

$$dpa(n+\gamma) = (0.249 + 2.03 \times 0.791)\ 10^{-12} \times (5.16 + 2.41) \times 3.15 \times 10^{7}$$
$$= (0.594 + 3.83) \times 10^{-4} = 4.42 \times 10^{-4}$$

AVERAGE $dpa(n+\gamma) = ((0.737 + 0.695 + 0.594) + (3.36 + 3.29 + 3.83)) \times 10^{-4}/3.0 =$
$= (0.675 + 3.49) \times 10^{-4} = 4.17 \times 10^{-4}$

APPENDIX F

REANALYSIS OF SURVEILLANCE CAPSULES HB-2-8, HB-2-17 AND HB-2-18

The surveillance capsules HB-2-8, HB-2-17, and HB-2-18 were removed from HFIR in 2004; the analysis was completed in 2006; and the results were reported in [9]. During the last period of the irradiation, the capsules were located in Key 2C. Capsule HB-2-8 was located in K2C, P16; capsule HB-2-17 in K2C, P1; and capsule HB-2-18 in K2C, P2. Key 2C and the capsules were installed in the reactor before the start of cycle 383; however, the new enlarged beam tube HB-2 was not installed until the beginning of cycle 385. Therefore, during cycles 383 and 384 the flux seen by the capsules was negligible. While this was not fully accounted for in the original analysis reported in [9], it was realized that the impact on the results was very minor. Nevertheless, since the analysis of the capsules needs to be repeated because dosimetry capsule DOS-8, which was irradiated in K2C, P1 and was used to determine dpa rates in the subject surveillance capsules was reanalyzed, the correct power history for the HB-2-8, -17, and -18 capsules was implemented. Results from dosimetry capsule DOS-9 were not used because the DOS-9 capsule was irradiated in position 4, which is farther away from the locations of the surveillance capsules HB-2-8, HB-2-17, and HB-2-18. However, there is almost no variation in dpa rates between DOS-8 and DOS-9, and using just DOS-8 or both DOS-8 and DOS-9 capsules would not have any effect on the dpa rates determined for capsules HB-2-8, HB-2-17, and HB-2-18.

The assumption in the calculations is that

$$\dot{dpa}\,(\text{n; HB-2-17}) \,/\, \dot{dpa}\,(\text{n; DOS-8}) = \overline{\mathrm{RR}(HB-2-17)/\mathrm{RR}(\mathrm{DOS}-8)}$$

And therefore:

$$\dot{dpa}\,(\text{n; HB-2-17}) = \dot{dpa}\,(\text{n; DOS-8}) \text{ x } \overline{\mathrm{RR}(HB-2-17)/\mathrm{RR}(\mathrm{DOS}-8)}$$

Where $\overline{\mathrm{RR}(HB-2-17)/\mathrm{RR}(\mathrm{DOS}-8)}$ denotes the normalization factor for the capsule, determined as the average of the ratios of the FE-54 (N,P) MN-54 and NI-58 (N,P) CO-58 reaction-rates measured in the surveillance capsule HB-2-17 and dosimetry capsule DOS-8. The values for the other two surveillance capsules are calculated in the analogous way. The same normalization factor is used for gamma-ray induced dpa rate because experience gained from analyses of dosimetry capsules shows that n-dpa and γ-dpa normalization factors are in most cases similar.

Table F.1 lists “measured” reaction rates for the three capsules, the reaction rates for DOS-8, the ratios of the reaction rates in the capsules to the reaction rates in DOS-8, the average values of the reaction-rate ratios for each capsule, and the normalization factor for each capsule.

The normalization factors from Table F.1 are used to scale the adjusted irradiation parameters for DOS-8 to obtain the irradiation parameters for the three surveillance capsules, as shown in Table F.2.

Table F.1. "Measured" reaction rates for DOS-8 and HB-2-17,-18,-8 surveillance capsules (at a reactor power of 85 MW), and the normalization factors

Capsule	Reaction	Reaction rate (s^{-1})	Ratio-to-DOS-8	Average	Normalization factor
DOS-8	FE54 (N,P) MN54	7.236E-15			
	NI58 (N,P) CO58	9.778E-15			
HB-2-17	HB-2-17A				
	FE54 (N,P) MN54	6.113E-15	0.845		
	NI58 (N,P) CO58	8.410E-15	0.860		
	HB-2-17C				
	FE54 (N,P) MN54	6.470E-15	0.894	0.896	**0.891**
	NI58 (N,P) CO58	8.310E-15	0.850	0.886	
	HB-2-17E				
	FE54 (N,P) MN54	6.876E-15	0.950		
	NI58 (N,P) CO58	9.256E-15	0.947		
HB-2-18	HB-2-18A				
	FE54 (N,P) MN54	6.244E-15	0.863		
	NI58 (N,P) CO58	7.748E-15	0.792		
	HB-2-18C				
	FE54 (N,P) MN54	6.840E-15	0.945	0.896	**0.876**
	NI58 (N,P) CO58	8.979E-15	0.918	0.855	
	HB-2-18E				
	FE54 (N,P) MN54	6.364E-15	0.879		
	NI58 (N,P) CO58	8.370E-15	0.856		
HB-2-8	HB-2-8A				
	FE54 (N,P) MN54	6.758E-15	0.934		
	NI58 (N,P) CO58	8.716E-15	0.891		
	HB-2-8C				
	FE54 (N,P) MN54	6.667E-15	0.921	0.953	**0.928**
	NI58 (N,P) CO58	8.715E-15	0.891	0.903	
	HB-2-8E				
	FE54 (N,P) MN54	7.262E-15	1.004		
	NI58 (N,P) CO58	9.058E-15	0.926		

Table F.2. Irradiation parameters for surveillance capsules HB-2-8, HB-2-17, and HB2-1 at a reactor power of 85 MW

Capsule	DOS8		HB-2-17		HB-2-8		HB-2-18	
Normalization factor (See Table F.1)			**0.891**		**0.928**		**0.876**	
Irradiation parameters	Adjusted value ( )[a]	Std.[b] (%)	Scaled value ( )[a]	Std.[b] (%)	Scaled value ( )[a]	Std.[b] (%)	Scaled value ( )[a]	Std.[b] (%)
Neutron flux (E > 1MeV)	1.01E+11	9	9.00E+10	9	9.37E+10	9	8.85E+10	9
Neutron flux (E > 0.5MeV)	1.65E+11	10	1.47E+11	10	1.53E+11	10	1.45E+11	10
Neutron flux (E > 0.1MeV)	2.69E+11	11	2.40E+11	11	2.50E+11	11	2.36E+11	11
Neutron flux (E < 0.414eV)	2.29E+12	5	2.04E+12	5	2.13E+12	5	2.01E+12	5
Neutron dpa/s (Fe,-ASTM)	1.69E-10	7	1.51E-10	7	1.57E-10	7	1.48E-10	7
Neutron dpa/s (Fe, ENDF-VI)	1.67E-10	7	1.49E-10	7	1.55E-10	7	1.46E-10	7
Gamma dpa/s	9.70E-12	22	8.64E-12	22	9.00E-12	22	8.50E-12	22
Gamma flux	1.84E+13	25	1.64E+13	25	1.71E+13	25	1.61E+13	25
Neutron +Gamma dps/s	1.79E-10	6	1.59E-10	6	1.66E-10	6	1.57E-10	6

[a]Units are $cm^{-2}s^{-1}$ for neutron and gamma-ray fluxes and s^{-1} for dpa/s.
[b]Percent standard deviation.

Table F.3. Irradiation parameters for surveillance capsules HB-2-8, HB-2-17, and HB2-18, normalized to a reactor power of 100 MW

Capsule	HB-2-17		HB-2-8		HB-2-18	
Irradiation parameters[a]	Scaled value ( )[a]	Std.[b] (%)	Scaled value ( )[a]	Std.[b] (%)	Scaled value ( )[a]	Std.[b] (%)
Neutron dpa/s (Fe,-ASTM)	1.78E-10	7	1.85E-10	7	1.74E-10	7
Gamma dpa/s	1.02E-11	22	1.06E-11	22	1.00E-11	22

[a]Units are s^{-1} for dpa/s.
[b]Percent standard deviation.

APPENDIX G

COMPUTER CODES AND DATA ARCHIVE

This appendix summarizes information about the computer codes used for the analysis of the dosimeters and the information on the computer runs performed.

The information is archived on DVD (labeled HFIR-PV-Surveillance-Dosimetry-2012) and on the computer cluster BETTY, in the directory "/home/i7r/HFIR-PV-SURVEILLANCE."

The archive consists of three main directories: "Codes," which contains the information on the codes used, "hfir05," which contains files from the analysis performed in 2008 and is described in Appendix F of ORNL/TM-2008/046, and "hfir10," which contains all the data used for the analysis presented in this report.

The "Codes" directory contains the source codes in subdirectory "src," executables in subdirectory "bin," a few auxiliary scripts used for file manipulation in "scripts," and a subdirectory "verification" which contains an example of the adjustment run, used to demonstrate that the code LSLM2 installed on BETTY under the Linux operating system produces the same results as the original LSLM2 code, which was designed for use with the DOS operating system. The details about the computer system, operating system, and compiler are listed in Table G.1.

Table G.1. Computer and code information

Computer system name	BETTY
Computer type/model	Quad-Core AMD Opteron Processor 2350
Operating system/version	Red Hat Enterprise Linux Client release 5.8 (Tikanga)
Computer code/version	LSLM2
Type of compiler	Portland Group Fortran Pgf-90 4.0-2
Owner of code	ORNL
RSICC[a] distribution number	PSR-233 MICRO

[a]Radiation Safety Information Computational Center located and operated within the Reactor and Nuclear Systems Division (RNSD) at ORNL.

The LSLM2 computer code package consists of four codes. The main code is "LSLM2," which performs a least-squares logarithmic adjustment of neutron and gamma spectra based on measured reaction rates. The program "ACT" performs conversion from dosimeter activities to reactions rates. The program "CALACT" calculates reaction rates from reaction rate cross sections and neutron and gamma fluxes. The last program, "FLXPRO," performs conversion of group fluxes, cross sections, and covariances from one energy group structure to another. The codes are written in FORTRAN-77.

The archive directory "hfir10" contains all the data and computer runs performed for the current analysis, which includes the dosimetry experiments performed in HFIR in 2008 and reanalysis of previous dosimetry-dedicated experiments. The list of the sub-directories and their content is listed in Table G.2.

Table G.2. Content of the archive directory, "hfir10"

Sub-directory	Content
cross sections	Reaction cross sections and manipulation runs
calculated-rr	Reaction rate calculated from neutron and gamma fluxes and reaction cross sections
measured-rr	Measured specific activities and "measured" reaction rates
power-history	Power history of HFIR operation
adjustment-2010	All adjustment runs with the LSLM2 computer code
hfir05	Data used in previous (2005) analysis and re-analysis performed for this report
hfir96	Data used in 1996 analysis and current reevaluation

The directory "adjustment-2010" contains subdirectories "key2c," and "key4," which contain data and adjustment runs performed for the dosimetry capsules which were withdrawn from HFIR in 2008, and subdirectory "key6," where the adjustment runs for the surveillance capsules withdrawn from Key 6 are stored.

Throughout the archive there are "README" files that provide additional explanation of the archived data. The archived data and codes provide complete information necessary to reproduce the analysis