DEVELOPMENT AND EVALUATION OF SILICON CARBIDE JOINTS FOR APPLICATIONS IN RADIATION ENVIRONMENT —Y. Katoh (Oak Ridge National Laboratory), T. Hinoki, H.C. Jung, J.S. Park, and S. Konishi (Kyoto University), and M. Ferraris (Politecnico di Torino)

OBJECTIVE

This work was intended to identify appropriate test method and specimen geometry, determine the effect of specimen size on apparent joint strength, and provide recommendation for a miniature specimen test scheme for silicon carbide joint strength in support of future neutron irradiation experiments. In the present report, recent development with regard to torsional shear strength evaluation is specifically discussed.

SUMMARY

Status of research and development of joining technology for silicon carbide-based ceramics and composites was surveyed and briefly summarized in terms of mechanical properties and anticipated stability in radiation environment. Several techniques which may be viable for joining silicon carbide-based materials for fusion and nuclear services were identified.

Test methods appropriate for testing shear properties of silicon carbide joints, including testing of neutron-irradiated specimens, was studied and identified. Torsional shear of solid cross-section specimens with hourglass-shaped fillet sections was selected as the method to be employed in the irradiation study in US-Japan TITAN program. Several miniature test specimen geometries were examined both by finite element analysis and by experiment. Joint specimen with a <~5 mm-diameter joint section and square grip sections was identified acceptable for the initial irradiation campaign. A few issues associated with the use of small and non-ideal geometry specimens were identified and adequately addressed.

PROGRESS AND STATUS

Introduction

Research and development of silicon carbide-based ceramics and composites for fusion energy are progressing from fundamental viability study to utilization technology development [1]. However, joining these materials is a significant challenge for their application in intense radiation environment anticipated [2]. Due to the lack of reliable and proven joining method developed so far for silicon carbide-based materials, mechanical/component designs for near-term applications such as flow channel insert in liquid metal blankets are avoiding the joining requirement [3]. However, if a reliable joining technology is readily available, that would provide substantially enhanced design flexibility. For long term application such as structural walls and coolant piping in blanket body, it is highly probable that silicon carbide-based components have to be joined each other and/or with other materials with robust, radiation-stable, and chemically compatible techniques [4]. Moreover, development of such techniques will greatly benefit other nuclear applications of silicon carbide-based materials, including fuel cladding for advanced light water reactors and gas-cooled thermal and fast spectrum reactors, and control rod structures in high temperature gas-cooled reactors.

This work was intended to survey the present status of joining research and development for silicon carbide-based materials for fusion energy, and to identify appropriate test method and specimen geometry, determine the effect of specimen size on apparent joint strength, and provide recommendation for a miniature specimen test scheme for silicon carbide joint strength in support of screening neutron irradiation campaign. In the present report, recent development with regard to torsional shear strength evaluation is specifically discussed.

R&D Status of Silicon Carbide Joining

Joining techniques presently considered promising include diffusion bonding using various active fillers [5], transient eutectic phase routes such as nano-infiltration and transient eutectic-phase (NITE) process [6, 7], selected area chemical vapor deposition [8], glass-ceramic joining [9, 10], reaction bonding [2, 11], and preceramic polymer routes [12]. Primary considerations specific to fusion application include resistance against neutron irradiation, mechanical properties such as strength and reliability during mechanical loading, compatibility of the processing condition with design requirement, and chemical compatibility with specific coolant, neutron breeder, or neutron multiplier. Techniques considered for the present study on silicon carbide to silicon carbide joining are summarized in Table 1. Several among these joining techniques are considered ready to proceed to a phase of neutron irradiation.

Table. 1. Potential methods for joining silicon carbide-based materials for radiation services.

Method	Typical strength	Anticipated radiation performance	On-going / recent R&D
Diffusion bonding w/ active metallic inserts	>~150 MPa shear	Good with adequate insert materials	NASA, Bettis, EU fusion
Transient eutectic-phase joining	~250 MPa tensile	Good with process optimization	Kyoto U., Dresden, etc.
Glass-ceramics Joining	~250 MPa flexural	Positive experimental result from EU Extremat program	POLITO
Brazing	N/A	Generally poor High induced activation	Snecma, ENEA, etc.
Reaction bonding (SiC+Si)	~200 MPa shear	Unstable due to residual silicon	NASA
Reaction bonding (TiSiC)	N/A	Unknown	PNNL
Polymer joining	~10 MPa shear	Unstable due to residual oxygen and nano-crystalline phase	PNNL, etc.
Transient Liquid Phase Metal Joining	N/A	Unknown	POLITO
Selective area CVD	N/A	As good as CVD SiC	U.Conn, etc.

Development of Miniature Specimen Test Technique

One of the difficult situations faced by the development effort for ceramic joints is the general lack of standard test methods which allow acquisition of mechanical properties data in a reliable and reproducible manner using specimens which are not prohibitively difficult and/or expensive to prepare . For example, simple methods of cantilever shear, double-notched shear, and asymmetric four point flexure are most frequently adopted for shear strength determination of ceramic joints. However, as shown in Table 2, which lists the methods applicable for shear properties evaluation of ceramic joints, none of those tests is able to produce reasonably pure shear stress state within the joint and the interfacing volumes which allows dependable determination of shear strength. Among the test methods shown in Table 2, only the Iosipescu shear, torsion, and V-notched rail shear tests enable the pure shear stress state in test specimens. It is highly preferred that one of such test methods is adopted in a consistent manner to enable meaningful comparison of joint properties from different processing techniques and before and after neutron irradiation.

Table 2. Methods of shear properties evaluation available for ceramic joints.

Method		ASTM Std.	Common for ceramic joint test	No severe flaw in stress state	Miniature specimen applicable	Remote testing practical
Short beam shear		D 2344	√			√
Lap shear		C 961				√
Iosipescu shear		D 5379	√	√		√
Off-axis tensile shear		D 3518			√	√
Rail shear		D 4255	√			
Cantilever shear		D 905	√		√√	√
Sandwich shear		C 273	√		√	√
Double-notched shear		D 3846	√		√	√
Torsion of thin tube		D 5448	√	√		√
Torsion of solid rod		F 734	√	√	√ √	√
Asymmetric four point		C 1469	√		√	√
V-notched rail shear		D 7078	√	√		
Off-axis Brazilian					√ √	√

Applicability of small specimens is a critical requirement in addition to the acceptable stress state. The requirement of small specimens is imposed by 1) the fact that the internal volume available in irradiation vehicle is generally very limited: in other words irradiating large specimens is more expensive and often cost-prohibitive, and the improved statistical quality by increased number of tests is often more beneficial for the same total specimen volume, and 2) the fact that the use of smaller specimens reduces the radioactivity, increasing flexibility of test procedures/techniques and reduces radiological concerns

associated with post-irradiation examination. Simple and robust test procedures are also preferred due to the same radiological reason, while other general benefits are obvious.

Above considerations eliminate Iosipescu and V-notched rail shear tests from the list of adequate methods for irradiated ceramic joints, although they may be considered adequate for the purpose of engineering data acquisition later for the purpose of materials qualification and database generation. Torsion of thin tube is also eliminated because preparation and handling of specimens involving thin-walled joint sections in miniature geometry is excessively challenging. By elimination, it is determined that torsion of solid specimens is the appropriate test method for post-irradiation shear properties of joints of silicon carbide-based materials.

The optimization of torsional specimen size and geometry is currently underway by collaboration among Oak Ridge National Laboratory, Kyoto University, and Politecnico di Torino. Figure 1 shows some of the miniature test sample geometries and dimensions which are being used for the preliminary study on the specimen size effect and considered for the irradiation study. The irradiation experiment currently under preparation in the US-Japan TITAN collaboration is supposed to be conducted using the rabbit capsules in High Flux Isotope Reactor of Oak Ridge National Laboratory, typically allowing interior volume of ~6 mm x ~6 mm X ~50 mm per capsule. Therefore, the largest specimen sizes are those with 6 mm x 6 mm grip cross-sections.

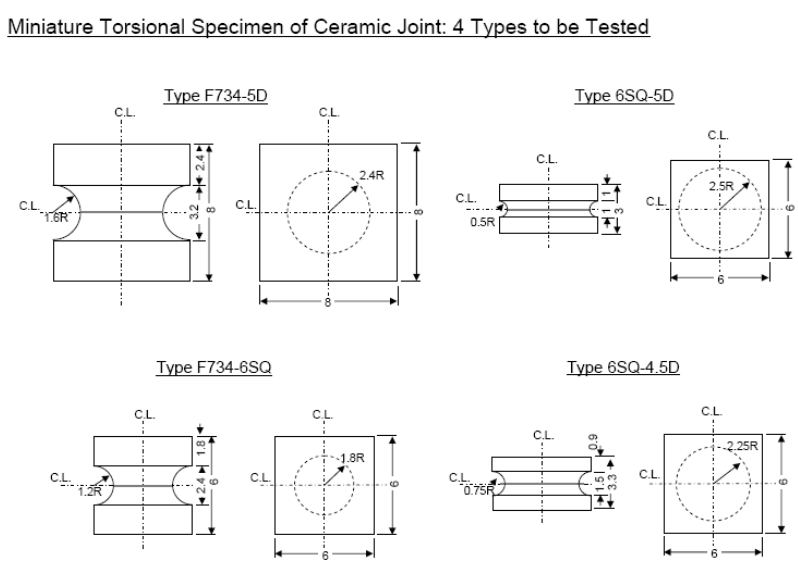

Fig. 1. Examples of miniature specimen geometries and dimensions for torsional testing of ceramic joints.

The potential drawbacks and associated issues for the miniature torsional specimens with very short fillet section length and polygonal grip sections are summarized: 1) non-linear stress distribution within the joint

layer with regard to the distance from torsional axis, 2) periodic variation of stress magnitude along the circumference due to the effect of grip shape, and 3) non-explicit correlation between the true and the

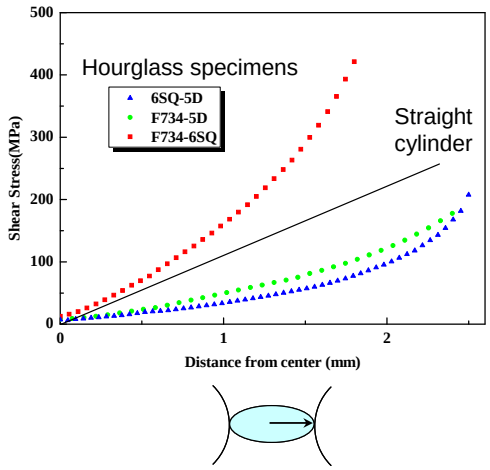

analytical maximum shear stresses due to 1 and 2.

Fig. 2. The influence of specimen geometry on radial distribution of shear stress magnitude within joint layer of torsional specimen.

Figure 2 depict the influences of fillet geometry on the radial distribution of shear stress in the joint layer calculated using a finite element model. The straight line indicating the ideal linear relationship between the stress magnitude and the distance from the torsional axis is for the case of straight rod specimen. In that case, the maximum shear stress that occurs at the specimen edge can be analytically derived as

$$\tau_{th} = 16T/\pi d^3 \qquad (1)$$

where T = applied torque and d = specimen (fillet) diameter. Clearly, stress distribution in the specimens with hourglass-shaped fillet sections deviates from linearity as the radial location approaches surface of the specimens. Such trend is apparent for the case of specimen geometry “F734-5D” and “F734-6SQ,” both based on ASTM Standard F734, and is more pronounced for the specimen geometry “6SQ-5D” which is with substantially smaller fillet curvature radius. The result indicates that a) the larger fillet curvature radius is preferred to minimize the stress distribution non-linearity, and b) true stress shall be determined based on finite element analysis rather than using the analytical equation, Eq. 1.

In Fig. 3, left, the influences of grip section geometry on the circumferential distribution of shear stress as calculated using a finite element analysis are presented. The circumferential stress distributions in specimens with square (black), octagonal (red), and circular (green) grip sections are compared for the same fillet curvature radius of 0.5 mm, indicating substantial (~±10%) stress variation for the case of square grip. Such circumferential variations in shear stress are believed to be caused by the fact that torque is transferred from the sockets to specimen only at the corners of the polygonal grip sections, when

rigid specimen is held in rigid sockets with a certain gap between them. Additional finite element analysis, result is shown on right, indicates that the circumferential stress variation can completely be mitigated when compliant filler material is inserted between the specimen and the sockets without leaving a space.

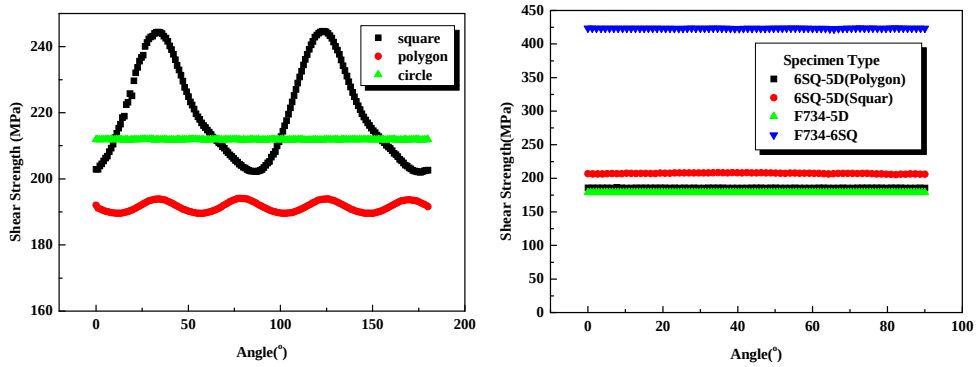

Fig. 3. The influences of geometry of grip section (left) and compliant socket insert (right) on circumferential distribution of shear stress in torsional joint specimens.

A torsional test instruments were developed and an experiment using it has been initiated at Kyoto University. The experimental setup, shown in Fig. 4, consists of the torsional loading mechanism driven by a universal mechanical test frame.

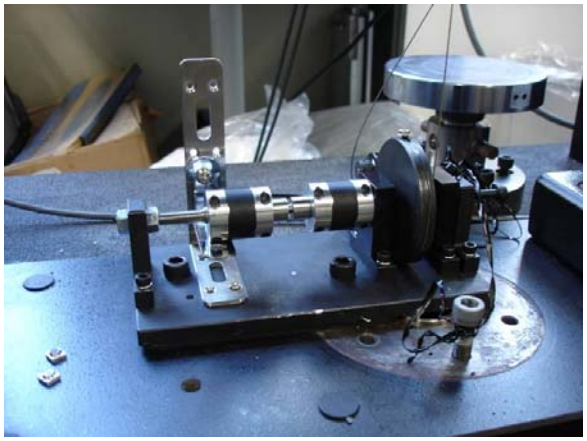

Fig. 4. Appearance of the miniature torsion test setup at Kyoto University.

Figure 5 shows the result of preliminary torsional shear test using the developed test setup and miniature specimens of chemically vapor-deposited silicon carbide (CVD SiC) joined with NITE™ joint. This result is considered to be showing incorrect strength of the NITE joint because the fracture appeared to be always initiating from within the base material. Moreover, the strength values shown are determined using Eq. 1, implying that the true shear strength is substantially higher. Nevertheless, the difference in apparent strength between two specimen types looks fairly reasonable considering the difference in extent of radial stress non-linearity.

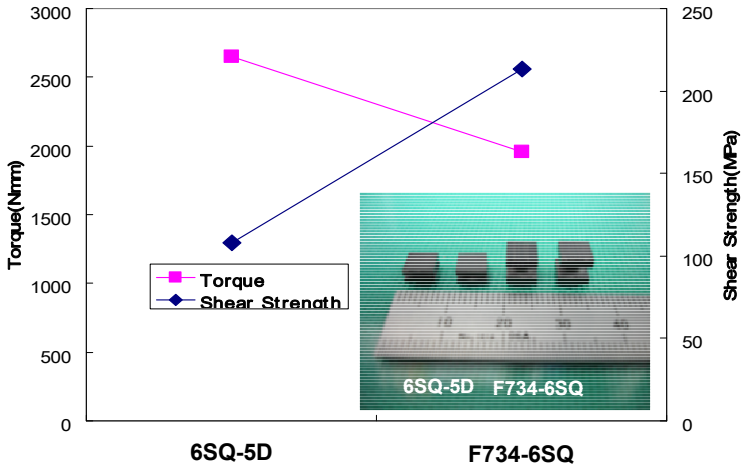

Fig. 5. Preliminary result of torsional strength test at room temperature using two different specimen types of NITE joint of CVD SiC. See text about evaluation of measured strength values.

References

1. Katoh, Y., et al., *Current status and critical issues for development of SiC composites for fusion applications.* Journal of Nuclear Materials, 2007. **367-370**: p. 659-671.
2. Lewinsohn, C.A., et al., *Joining of silicon carbide composites for fusion energy applications.* Journal of Nuclear Materials, 2000. **283**: p. 1258-1261.
3. Morley, N.B., et al., *Recent US research and development for the dual coolant blanket concept.* Fusion Engineering and Design, accepted.
4. Raffray, A.R., et al., *Design and material issues for high performance SiCf/SiC-based fusion power cores.* Fusion Engineering and Design, 2001. **55**(1): p. 55-95.
5. Cockeram, B.V., *Flexural Strength and Shear Strength of Silicon Carbide to Silicon Carbide Joints Fabricated by a Molybdenum Diffusion Bonding Technique.* Journal of the American Ceramic Society, 2005. **88**(7): p. 1892-1899.
6. Hinoki, T., et al., *Development of joining and coating tehnique for SiC and SiC/SiC Composites utilizing NITE processing.* Ceramic Engineering and Science Proceedings, 2005. **26**(2): p. 399-405.
7. Lippmann, W., et al., *Laser joining of silicon carbide—a new technology for ultra-high temperature resistant joints.* Nuclear Engineering and Design, 2004. **231**: p. 151-161.
8. Harrison, S. and H.L. Marcus, *Gas-phase selective area laser deposition (SALD) joining of SiC.* Materials and Design, 1999. **20**(2-3): p. 147-152.
9. Katoh, Y., et al., *Microstructure and mechanical properties of low-activation glass-ceramic joining and coating for SiC/SiC composites.* Journal of Nuclear Materials, 2000. **283**: p. 1262-1266.
10. Ferraris, M., et al., *Joining of machined SiC/SiC composites for thermonuclear fusion reactors.* Journal of Nuclear Materials, 2008. **375**: p. 410-415.
11. Lewinsohn, C.A., et al., *Silicon-Carbide-Based Joining Materials for Fusion Energy and Other High-Temperature Structural Applications.* Ceramic Engineering and Science Proceedings, 2001. **22**(4): p. 621-626.
12. Henager, C.H., et al. *Coating and joining for SiC/SiC composites using preceramic polymers*. in *The Sixth IEA International Workshop on SiC/SiC Ceramic Composites for Fusion Applications*. 2004. Boston, Massachusetts, USA.