3.2 MECHANICAL PROPERTIES OF W-1.1%TiC ALLOY - M. A. Sokolov (Oak Ridge National Laboratory)

OBJECTIVE:

The objective of this effort is to perform tensile and fracture toughness characterization of W-1.1%TiC nanostructured alloy.

SUMMARY:

A small disk of W-1.1%TiC alloy produced by Japanese researchers led by Hiroaki Kurishita was sent to ORNL for mechanical testing and characterization. The purpose of the study is to evaluate the effect of small additions of TiC in improving the performance of W-based materials designed for operation in the divertor environment. This is part of on-going efforts of the international fusion community to understand and improve the ductility and toughness of W-based materials using nano-scale microstructural modification. A test plan was developed to perform limited fracture toughness and tensile evaluation of this alloy. The results of this evaluation will be presented in the next semi-annual report.

PROGRESS AND STATUS:

A small disk of W-1.1%TiC alloy was produced by Japanese researchers led by Hiroaki Kurishita and transferred to ORNL for mechanical testing and characterization. The disk is about 22 mm in diameter and ~3 mm thick. Figure 1 illustrates the production processing for this nanostructured alloy:

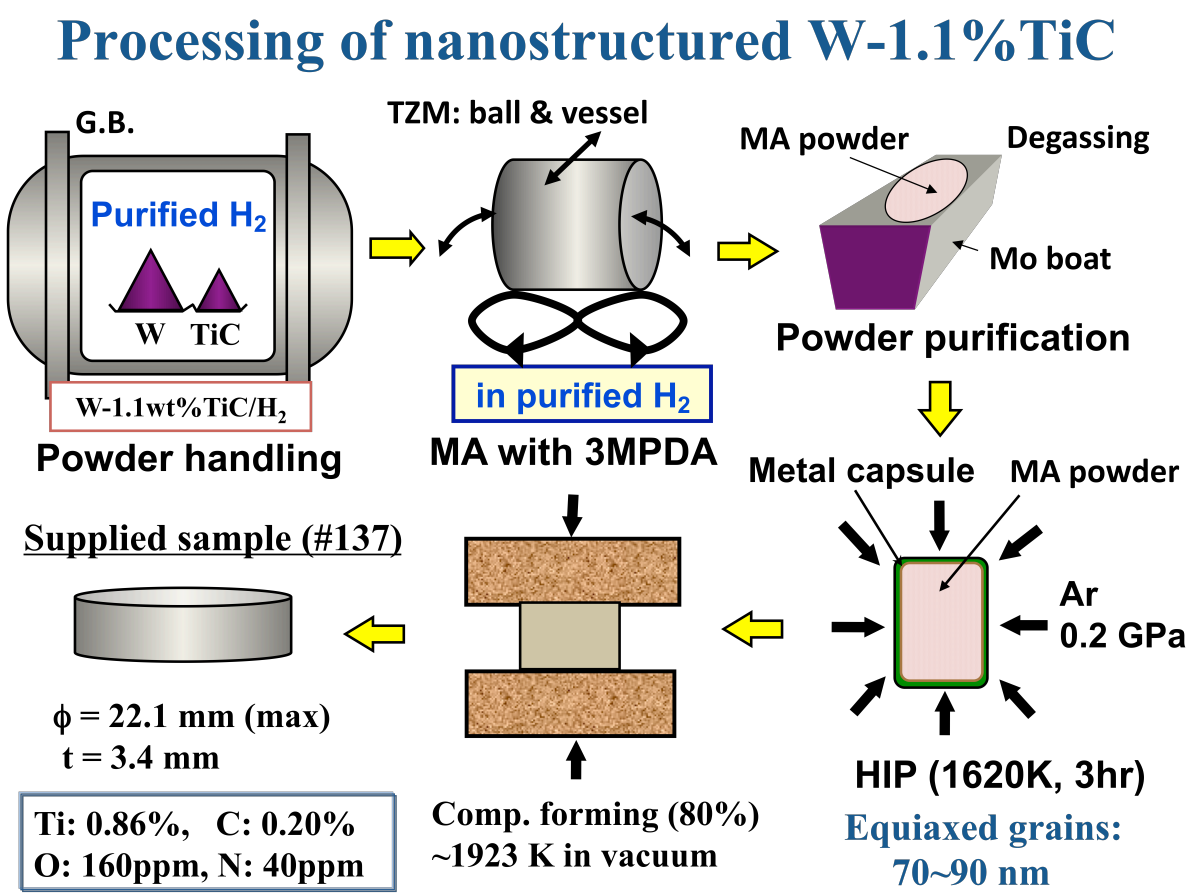

Figure 1. Processing scheme for nanostructured W-1.1%TiC alloy, produced by Prof. Kurishita.

The Vickers hardness of this alloy is HV = 517 ± 5 for a load of 300gf and hold time of 20 s. A plan was developed to perform limited fracture toughness and tensile characterization of this alloy. Figure 2 shows a sketch of the layout used to machine specimen from this disk. A total of three sub-size tensile and four bend bar specimens were machined. The bend bars will be precracked and tested to determine fracture toughness. In addition, six sub-size DMFB type bend bars were also produced. Depending on precracking behavior of this material, these specimens will be tested either in impact mode or static fracture toughness mode.

The results of this evaluation will be presented in the next semi-annual report.

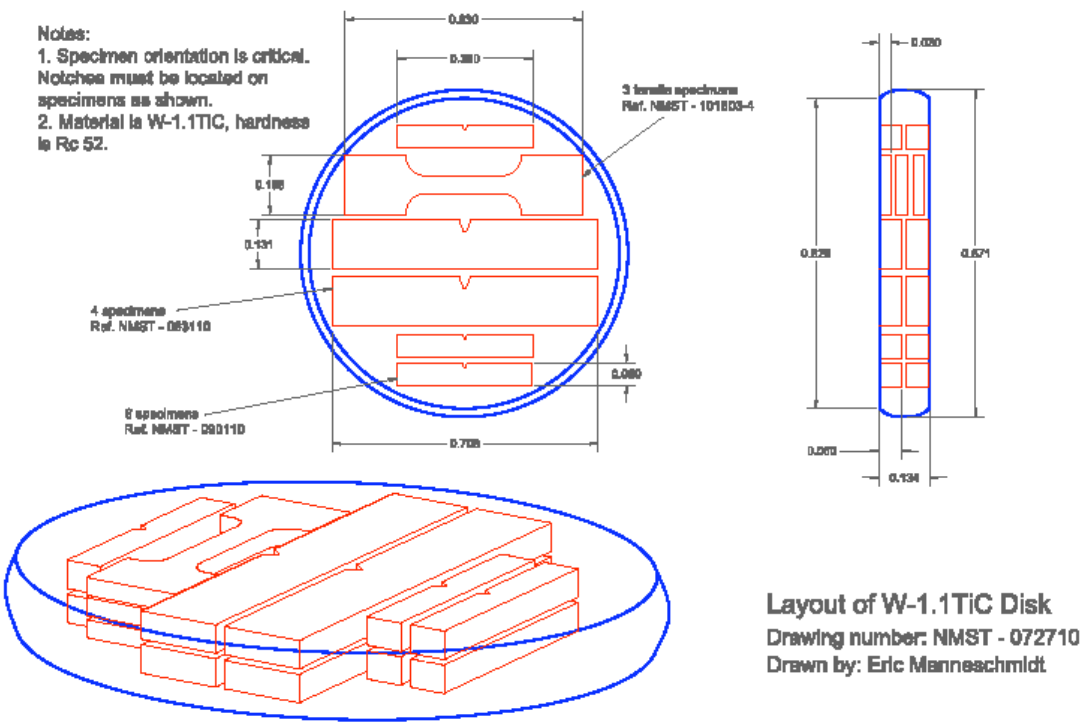

Figure 2. Layout of test specimens to characterize tensile and fracture toughness properties of W-1.1% TiC alloy.