8.1 OPERATING CONDITIONS AND IRRADIATION HISTORY FOR EXPERIMENT MFE-RB-15J — J. McDuffee, D. Heatherly (Oak Ridge National Laboratory)

OBJECTIVE

The objective of this summary is to describe the operating conditions (temperature & fluence) and operating history of the MFE-RB-15J experiment.

SUMMARY

The MFE-RB-15J experiment was designed to irradiate steel specimens at 300 and 400°C for 10 cycles in the RB* irradiation facility in HFIR. The irradiation vessel was divided into three subcapsules. The specimen regions of the upper and lower subcapsules were about 7.7 cm long, located ±14 cm from the reactor midplane, and designed to operate at 300°C. The specimen region of the middle subcapsule was about 11.5 cm long, centered at the reactor midplane, and designed to operate at 400°C.

Each subcapsule was filled with lithium, which became molten during operation and solidified during reactor outages. Thermocouples were located at the centerline of each subcapsule and extended upward through part of the axial length of the subcapsule.

Because of concerns over the potential for a volatile reaction between the lithium and water in the event of a containment failure, the specimen-containing subcapsules were housed inside two outer containments. There were small gas gaps between the primary and secondary containments and between the secondary containment and the subcapsules. The outer gas gap was filled with helium. The inner gas gap was filled with a mixture of helium and neon, and the relative concentrations of the two were controlled to provide the gas conductivity necessary to achieve the desired temperatures. The gas compositions for each of the three subcapsules were controlled separately, although not completely independently.

PROGRESS AND STATUS

MFE-RB-15J Irradiation History & Fluence

The irradiation history for MFE-RB-15J is shown in Table 1. The experiment initial cycle was Cycle 415 in June of 2008. The final cycle was Cycle 424 in October 2009. The experiment total exposure was just over 20,000 MW-days, with a total of 236 effective full-power days. Assuming a dpa/fluence conversion factor of 0.000289 dpa/MWd, the total dpa for the experiment was 5.8 dpa at the reactor midplane location.

Neutron Flux Spectrum

The neutron flux spectrum is complicated for the 15J experiment because of the use of a Eu_2O_3 thermal neutron shield. The lower, middle, and upper subcapsules are all located inside the shielded region. The thermal flux inside the shield is greatly reduced due to the large thermal cross section of Eu_2O_3. The degree of reduction depends a great deal on the accumulated fluence of the shield itself. It was originally planned to run the 15J experiment with a fresh shield. However, fabrication difficulties prevented the new shield from being completed by the beginning of the experiment. As a result, liner Eu-5, a previously used shield, was selected. Table 2 shows the lifetime of the Eu-5 shield prior to the 15J experiment.

Table 1. Experiment MFE-RB-15J irradiation history

Cycle	Start	End	Exposure (MWd)	Effective Full-Power Days	Cooling Time (days)
415	03-Jun-2008	30-Jun-2008	1992	23.44	16.1
416	16-Jul-2008	06-Aug-2008	1782	20.96	48.7
417	24-Sep-2008	18-Oct-2008	2021	23.78	25.0
418	12-Nov-2008	05-Dec-2008	1992	23.44	32.4
419	07-Jan-2009	31-Jan-2009	2047	24.08	17.8
420	18-Feb-2009	14-Mar-2009	2069	24.34	59.5
421	13-May-2009	06-Jun-2009	2070	24.35	17.5
422	24-Jun-2009	18-Jul-2009	2012	23.67	18.3
423	05-Aug-2009	29-Aug-2009	2058	24.21	45.8
424	14-Oct-2009	09-Nov-2009	2026	23.83	
		Total	**20069**	**236.10**	

Table 2. Eu-5 liner operating history

Cycle	Experiment	Start	End	Exposure (MWd)	Effective Full-Power Days	Cooling Time (days)
364A	MFE-RB-10J	13-Oct-1998	23-Oct-1998	876	10.3	2.7
364B	MFE-RB-10J	26-Oct-1998	08-Nov-1998	1096	12.89	276.2
372	MFE-RB-10J	11-Aug-1999	27-Aug-1999	1378	16.21	1,704.8
400	MFE-RB-17J	27-Apr-2004	21-May-2004	2069	24.34	55.5
401	MFE-RB-17J	16-Jul-2004	09-Aug-2004	2067	24.32	50.2
402	MFE-RB-17J	28-Sep-2004	23-Nov-2004	1963	23.09	63.9
403A	MFE-RB-17J	26-Jan-2005	04-Feb-2005	765	9.00	61.2
404	MFE-RB-17J	06-Apr-2005	30-Apr-2005	1967	23.14	5.6
403B	MFE-RB-17J	05-May-2005	18-May-2005	1133	13.33	8.9
405	Al Plug	27-May-2005	20-Jun-2005	1974	23.22	8.0
406	Al Plug	28-Jun-2005	23-Jul-2005	1889	22.22	1,046.2

Figure 1 shows how the thermal flux increases as a function of irradiation time. The fast flux is essentially constant throughout the irradiation at about $4.8 \cdot 10^{14}$ n/cm²·sec, so the fast/thermal ratio changes are a reflection of the thermal flux.

The spectrum for the middle subcapsule is shown in Figure 2 for the first and last cycles for the 15J experiment. The fast flux is shown to be nearly constant in this figure. The flux spectra begin to deviate at about 1 keV.

MFE-RB-15J Operating Temperatures

Each subcapsule is fitted with a thermocouple array that extends from the bottom to some point in the middle of the subcapsule. There are three temperature measurements in each capsule, located according the drawing shown in Figure 3. The upper subcapsule is not shown, but the thermocouple locations are the same in the upper and lower subcapsules.

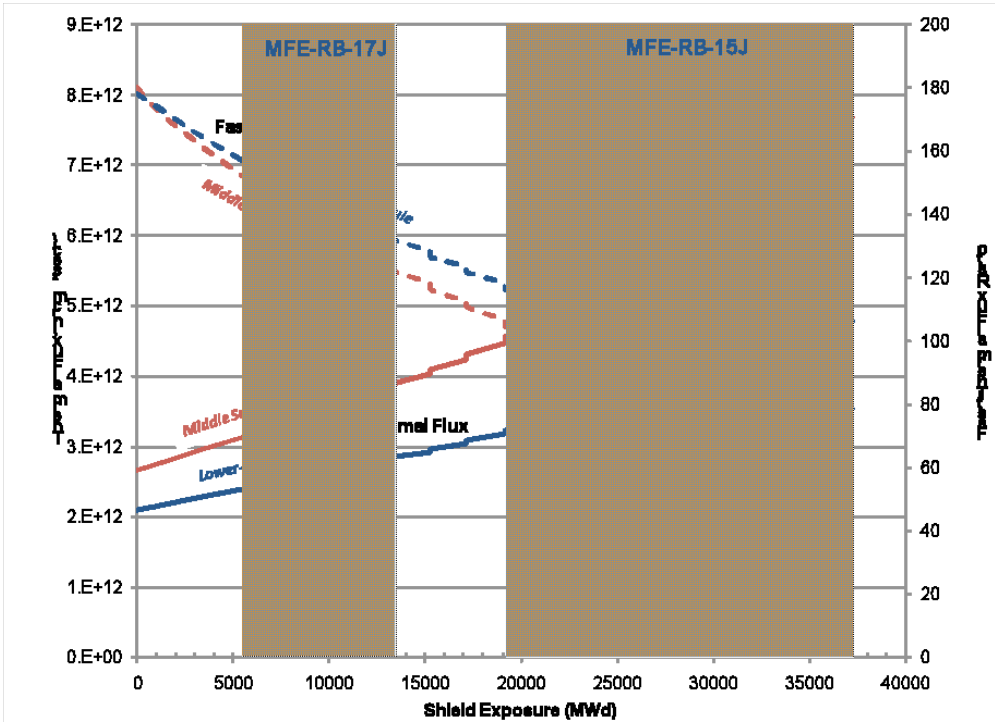

Figure 1. Thermal flux and fast/thermal ratio inside the shield as a function of irradiation time

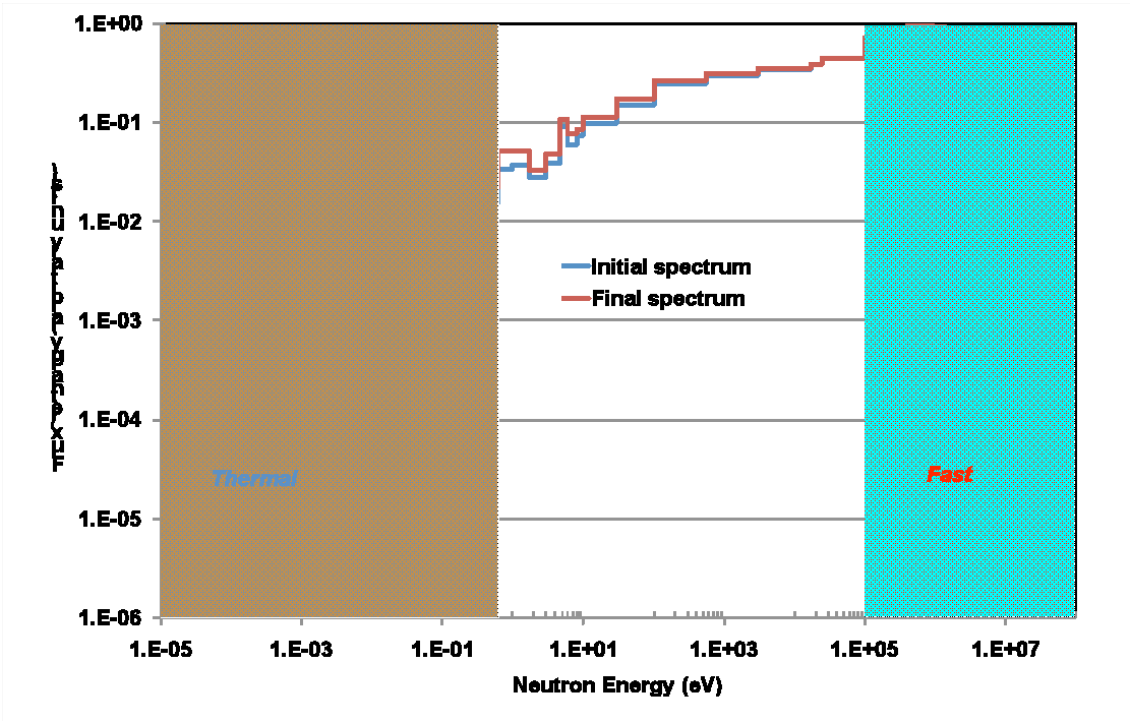

Figure 2. Flux spectra in the specimen region of the middle subcapsule for the initial and final MFE-RB-15J cycles

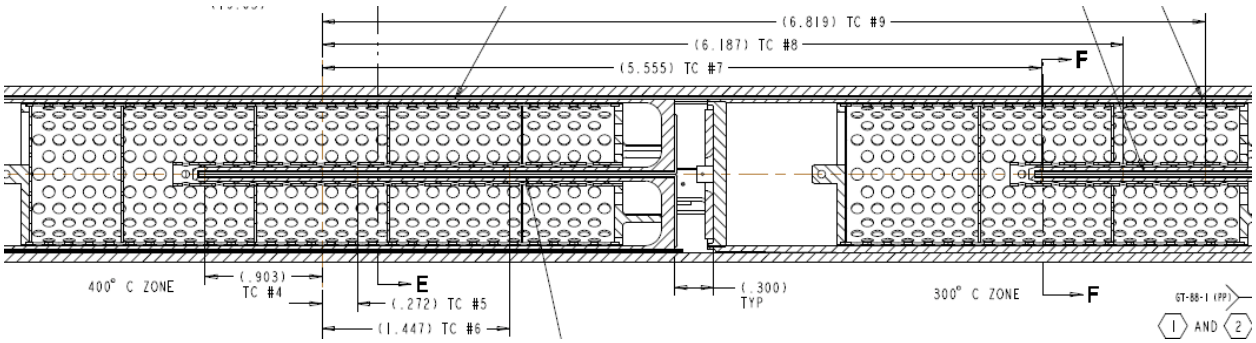

Figure 3. Thermocouple locations (inches) in each subcapsule from the reactor midplane

Table 3 summarizes the temperature measurements for all thermocouple locations through the entire experiment. For each cycle the temperature measurements at 15 minute intervals are averaged over the full cycle time where the reactor power is greater than 80 MW. Startup times where the reactor ascends to full power are typically 1 hour or less. The minimum temperatures shown in Table 3 represent the period of time just after full power attainment before the gas composition has been fully adjusted to achieve the setpoint temperature. Gas compositions are purposefully set to give too low temperatures at startup to avoid temperatures higher than desired.

Table 3. Temperature summary (°C) for the MFE-RB-15J experiment

	Upper Subcapsule			Middle Subcapsule			Lower Subcapsule		
Cycle	**TE501**	**TE502**	**TE503**	**TE504**	**TE505**	**TE506**	**TE507**	**TE508**	**TE509**
415	300.3	304.8	304.6	428.1	423.0	422.2	310.8	302.8	297.9
416	301.2	305.2	301.5	427.4	418.2	419.3	310.5	302.3	296.4
417	301.7	303.9	303.1	427.9	419.2	421.2	310.4	302.2	298.7
418	303.2	304.3	302.3	429.7	418.1	420.2	309.0	302.5	298.4
419	301.9	304.1	301.6	426.2	418.7	421.5	309.1	301.0	298.4
420	301.2	303.7	301.8	427.3	416.9	419.9	306.3	302.1	299.2
421	301.4	304.2	301.4	426.3	418.6	421.6	306.9	301.7	298.9
422	303.1	306.0	303.2	429.0	419.5	422.7	308.6	303.6	300.6
423	303.0	306.3	303.6	427.4	420.8	424.7	308.3	303.7	301.4
424	304.3	308.3	303.2	430.9	420.7	422.9	310.2	304.6	301.0
Average	302.1	305.1	302.6	428.0	419.4	421.6	309.0	302.6	299.1
σ	2.7	2.7	2.8	2.2	2.4	2.3	2.6	2.3	2.4
Min	245.3	243.2	241.4	372.0	362.2	362.3	256.1	249.2	244.3
Max	309.8	312.6	310.7	433.6	430.9	429.2	317.4	309.5	305.3
Average	303.3			423.0			303.6		
σ	3.0			4.3			4.8		

The temperatures shown in Table 3 are higher than the desired specimen temperatures because the thermocouple locations are at the experiment axial centerline where the temperatures are highest. There is a signficant ΔT offset between the thermocouple and the average specimen temperature. Based on the design calculations, the temperature offset between the thermocouple and the average specimen temperature should be 14°C, 27°C, and 16ºC for the upper, middle, and lower subcapsules, respectively. Therefore, the average specimen temperatures for each region are 289±6ºC, 396±9°C, and 288±10°C in the upper, middle, and lower subcapsules, respectively, where the ± range represents $2\cdot\sigma$. The experiment team realized that the temperatures in the upper and lower subcapsules were lower than desired, but it was determined that these were the maximum achievable temperatures that could be maintained consistently for the entire cycle.

Note that the standard deviations listed above refer to the variation of the measured temperatures at the experiment centerline over the course of the experiment. They provide an indication of the temperature variation over time. The design calculations show that the spatial temperature variation is ±12°C for the upper and lower subcapsules and ±23°C for the middle subcapsule, where the ± range represents the ½ span [½·(maximum-minimum)]. The spatial variation is primarily due to the radial temperature gradient from the centerline to the inner surface of the subcapsule housing.