8.2 DESIGN OF THE JP30 AND JP31 EXPERIMENTS – J. McDuffee, D. Heatherly, N. Cetiner (Oak Ridge National Laboratory)

OBJECTIVE

The objective of this summary is to describe the designs for the JP30 and JP31 experiments.

SUMMARY

Two experiments, JP30 and JP31, have been designed to place various stainless steel specimens in the flux trap of the High Flux Isotope Reactor (HFIR). These designs are very similar to other experiments irradiated previously in HFIR (e.g., JP26, JP27, JP28, JP29).

The JP30 and JP31 experiments are designed to irradiate F82H specimens of various sizes and types in the flux trap of HFIR at temperatures in the range of 300 to 650°C. The specimens are typically contained within holders of either DISPAL (dispersion-strengthened aluminum) or a vanadium alloy (V-4Cr4Ti). The primary outer containment is an Al-6061 tube with an outer diameter of 1.27 cm. Helium is used as the fill gas inside the experiment. The specimen temperature is controlled by the size of the gap between the holder and housing. This report summarizes the work described in the design and analysis calculation for this project [1].

PROGRESS AND STATUS

Design Drawings

Table 1 lists design drawings and titles that were modified or developed for the JP30 and JP31 experiments. Both experiments consist of a stack of individual specimen holders and specimens. Figure 1 through Figure 4 show layouts for the four specimen types taken from the design drawings in Table 1.

Table 1 JP30/31 Design Drawings

Drawing No.	Title
X3E020977A437	TEM HOLDER SUBASSY, TEM HOLDER DETAIL
X3E020977A438	M3-PCCVN HOLDER SUBASSY, M3-PCCVN HOLDER DETAIL
X3E020977A439	M5-PCCVN HOLDER SUBASSY, M5-PCCVN HOLDER DETAIL
X3E020977A441	SS-J3/APFIM HOLDER SUBASSY, SS-J3/APFIM HOLDER DETAIL
X3E020977A442	DCT SPECIMEN SUBASSY, DCT SPECIMEN DETAILS
X3E020977A443	DCT SPECIMEN MISC. DETAILS
X3E020977A444	CAPSULE SPACER ASSEMBLIES
X3E020977A445	CAPSULE SPACER DETAILS
X3E020977A446	MISC. DETAILS
X3E020977A576	JP IRRADIATION CAPSULE NO. 30 ASSEMBLY
X3E020977A577	JP IRRADIATION CAPSULE NO. 31 ASSEMBLY

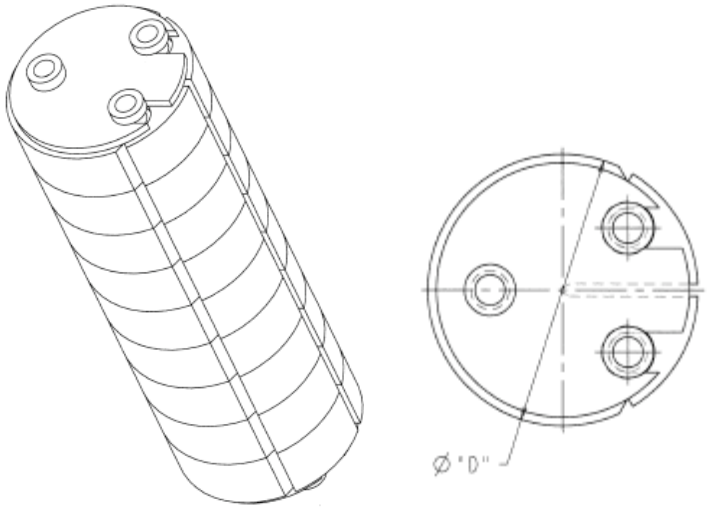

Figure 1. Specimen Layout for the DCT regions

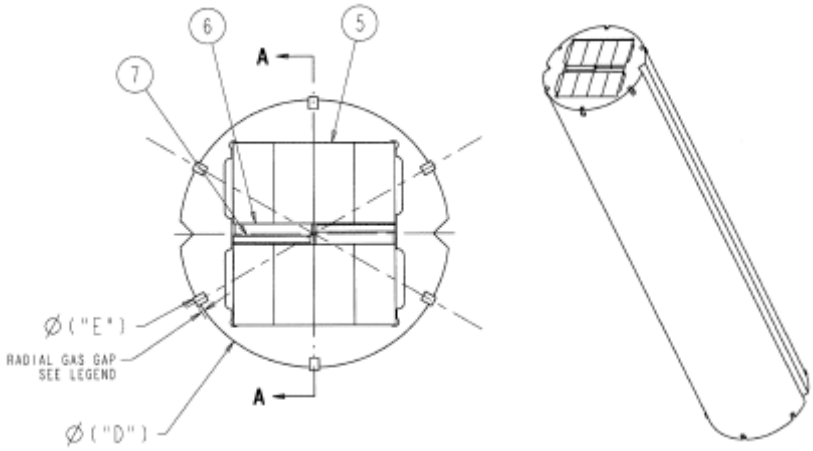

Figure 2. Specimen Layout for the PCCVN regions

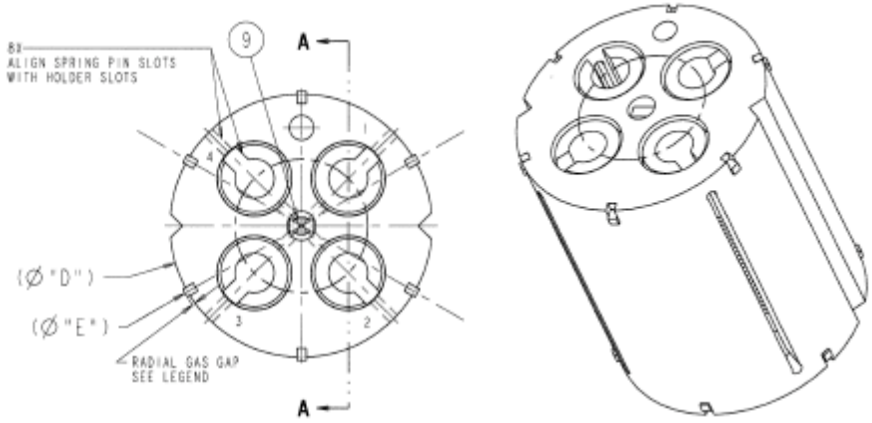

Figure 3. Specimen Layout for the TEM regions

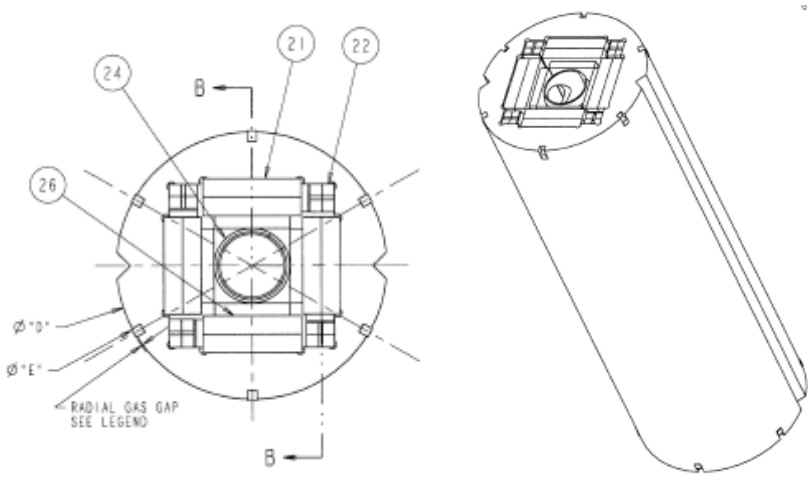

Figure 4. Specimen Layout for the SSJ3 regions

Materials of Construction

The primary outer containment is fabricated from Al6061, and specimens are all F82H or variations of this alloy. Holders are fabricated from DISPAL in the lower temperature regions and from V-4Cr4Ti in the 650C regions. Other components (e.g., spacers, centering tabs) are typically made from 300-series stainless steel.

Thermal Boundary Conditions

JP30 and JP31 are the most recent in a long series of similar experiments. Previous experiments have shown reasonably good agreement between the design temperatures and the post-irradiation analysis of experiment thermometry. Therefore, material heat generation rates, the heat transfer coefficient, and the bulk fluid temperature are all taken to be the same as that assumed for previous experiments. Table 2 summarizes the thermal boundary conditions used in this analysis. These values are taken from the design documentation associated with JP28/29 [2].

Table 2. Thermal Boundary Conditions from the JP28/29 Design

Heat transfer coefficient	48040 W/m²·°C
Bulk fluid temperature (all regions)	60°C
Heat generation rate for AL6061, DISPAL aluminum, and silicon carbide	29.24 W/g
Heat generation rate for stainless steel	46.41 W/g

The major difference in the JP30/31 designs and previous designs is that the maximum temperature in the JP30/31 designs is 650°C rather than 500°C. All the earlier designs used holders fabricated from DISPAL aluminum, which has a melting point of about 660°C. For these new 650°C regions, a vanadium alloy (V-4Cr4Ti) is selected as the holder material which has a much larger margin to melt. The heat generation rate for this alloy is 45.1 W/g [3].

Finite Element Model

Both JP30 and JP31 have 14 regions, each with its own design temperature. The design temperatures for this experiment are 300°C, 400°C, and 650°C. Spacers are placed between regions of different temperatures to minimize axial heat flow between regions. As such, a two dimensional analysis in the R-θ plane is used for each region.

Fundamentally, there are four types of specimen regions: DCTs, PCCVNs, SSJ3s, and TEMs. The PCCVN regions may be of type M2, M3, or M5, but all of these specimen types are identical in the R-θ plane.

Figure 5 through Figure 8 show the geometrical models used for the thermal analysis for each of the specimen regions. All dimensions are shown in meters. Table 3 summarizes where each specimen region is located in the JP30/31 experiments, along with the region design temperature. Regions with a gray background in Table 3 indicate a change from the JP28/29 experiments.

Because of satisfactory results from the JP28/29 thermometry, JP30/31 specimen regions which are unchanged from the JP28/29 experiments are not redesigned. However, the JP28/29 experiments used a different extrusion stock for the housing that had a slightly different inner diameter. Specifically, the JP28/29 experiments had a housing inner diameter of 0.4413", while the JP30/31 housing stock has an inner diameter of 0.4451”. In order to maintain the previous design, the JP28/29 holder design diameters were increased by 0.0038", which preserves the gas gap between the holder and housing.

Although the unchanged specimen regions are not redesigned, they are re-analyzed and reported in this calculation for completeness. Slight differences in calculated temperature are to be expected due to modeling differences.

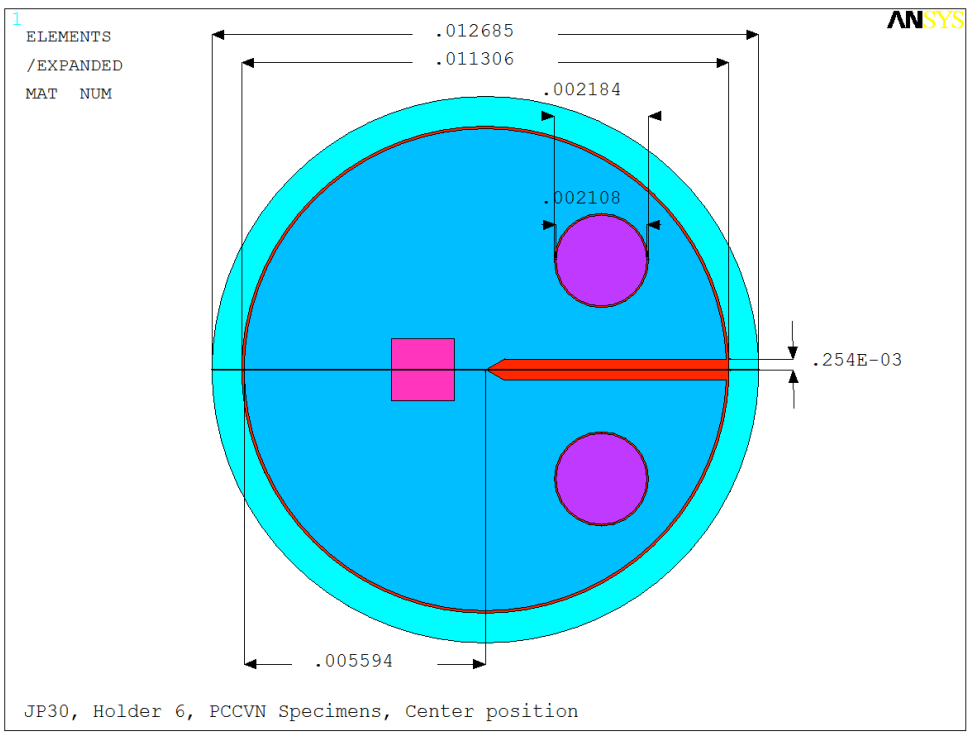

Figure 5. Geometrical Model for the DCT regions

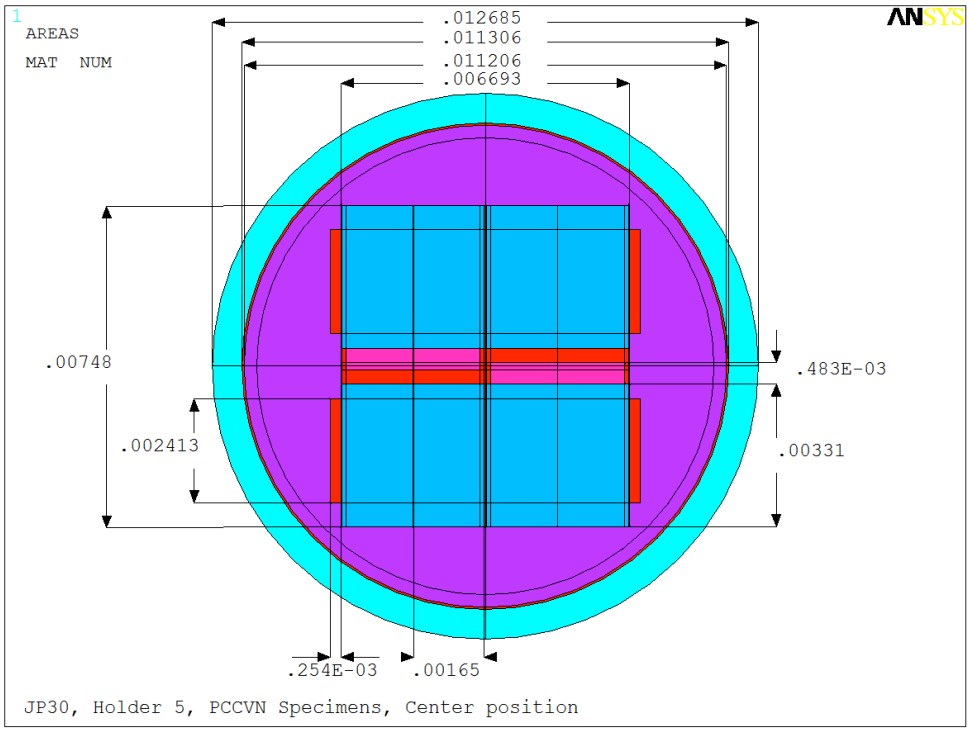

Figure 6. Geometrical Model for the PCCVN regions

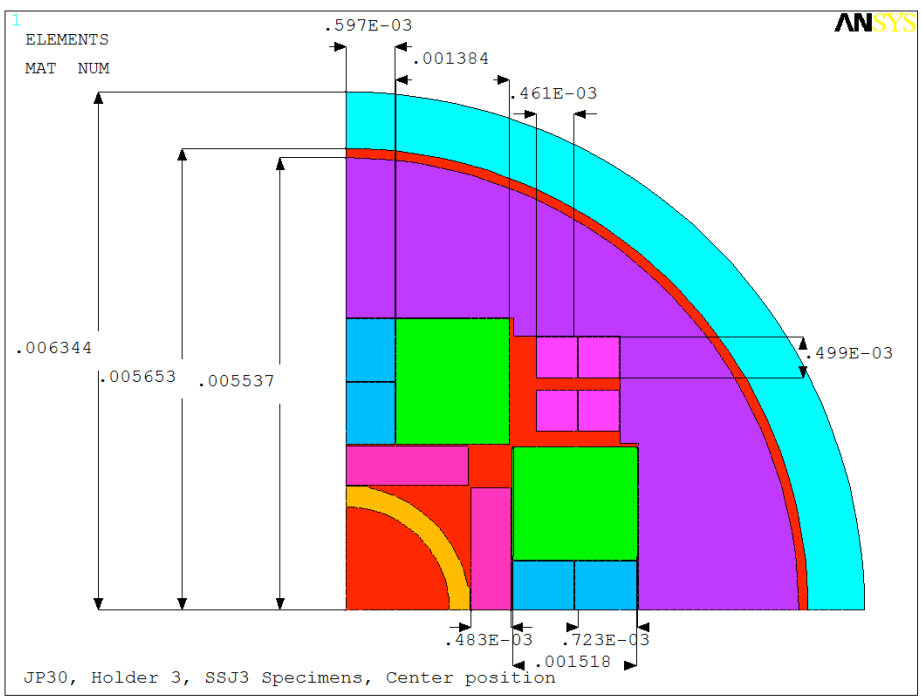

Figure 7. Geometrical Model for the SSJ3 regions

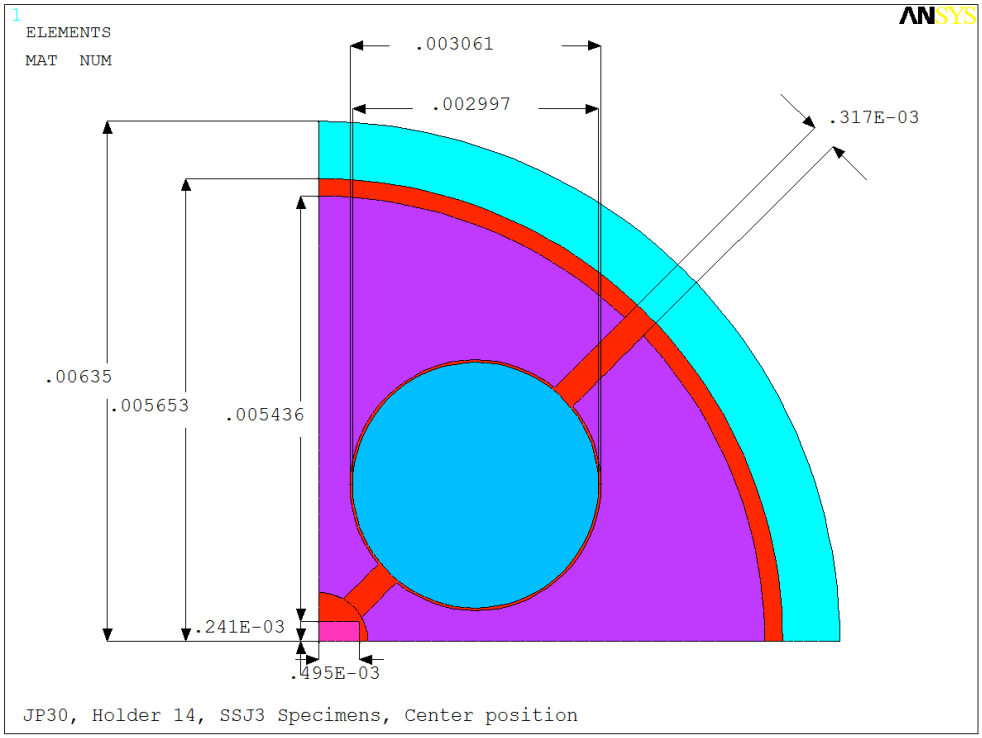

Figure 8. Geometrical Model for the TEM regions

Table 3. Design Layout for the JP30/31 Experiments

Capsule	Holder	Design Temperature (°C)	Specimen Type
JP30	1	400	SSJ3
	2	650	DCT
	3	300	SSJ3
	4	300	DCT
	5	300	M3PCCVN
	6	400	DCT
	7	400	SSJ3
	8	400	DCT
	9	650	SSJ3
	10	300	M2PCCVN
	11	300	M3PCCVN
	12	300	M3PCCVN
	13	300	M3PCCVN
	14	300	TEM

Table 3. Design Layout for the JP30/31 Experiments

Capsule	Holder	Design Temperature (°C)	Specimen Type
JP31	1	400	TEM
	2	400	SSJ3
	3	650	SSJ3
	4	300	M2PCCVN
	5	300	DCT
	6	300	M3PCCVN
	7	300	SSJ3
	8	400	M5PCCVN
	9	650	M5PCCVN
	10	300	SSJ3
	11	300	DCT
	12	300	SSJ3
	13	300	SSJ3
	14	650	TEM

Design Analysis

The sections below describe the new and repeated designs for each specimen type. The stated temperature range for each part indicates a 95% span by volume. In other words, 95% of the volume of the part will have a temperature between the endpoints of the span. The range includes segments at the top, middle, and bottom of the holder.

DCT New Designs

The results of the new DCT region designs are described in Table 4. Figure 9 through Figure 10 show the temperature contours for the specimens and thermometry.

Table 4. Design Summary for New DCT Regions

Experiment	Holder (Design Temperature ºC)	Design Specimen Diameter	Part	Temperature (°C) Average (Min-Max)
JP30	2 (650°C)	10.82 mm [1-4]* (0.4257")	Housing	74 (71-76)
			DCT pin	617 (609-652)
		10.86 mm [5-9]* (0.4274")	DCT (all)	607 (571-666)
			DCT (crack region)	650 (630-666)
JP31	11 (300°C)	11.22 mm (0.4416")	Housing	77 (74-80)
			DCT pin	292 (275-307)
			DCT (all)	267 (221-314)
			DCT (crack region)	301 (287-312)

**Refers to specimen number, where 1=top and 9=bottom*

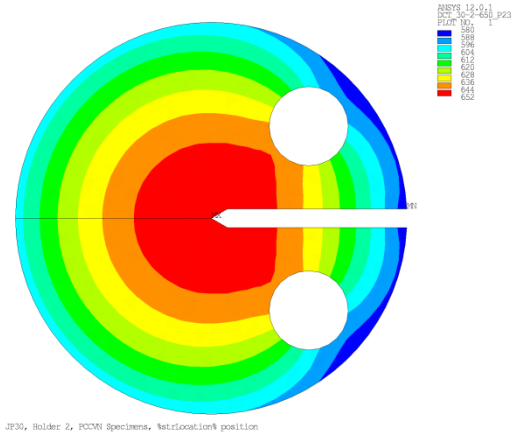

Figure 9. Contour Temperature Plot (°C) for DCT Specimens in JP30, Holder 2

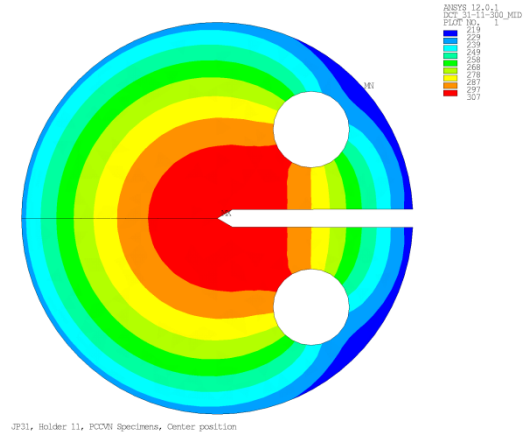

Figure 10. Contour Temperature Plot (°C) for DCT Specimens in JP31, Holder 11

DCT Repeat Designs

The results of the repeated DCT region designs are described in Table 5. Figure 11 through Figure 14 show the temperature contours for the specimens and thermometry.

Table 5. Design Summary for Repeat DCT Regions

Experiment	Holder (Design Temperature ºC)	Design Specimen Diameter	Part	Temperature (°C) Average (Min-Max)
JP30	4 (300°C)	11.23 mm (0.4423")	Housing	79 (76-82)
			DCT pin	282 (267-294)
			DCT (all)	254 (206-301)
			DCT (crack region)	290 (280-299)
JP30	6 (400°C)	11.19 mm (0.4405")	Housing	81 (78-84)
			DCT pin	371 (358-380)
			DCT (all)	344 (294-392)
			DCT (crack region)	385 (378-390)
JP30	8 (400°C)	11.19 mm (0.4405")	Housing	81 (78-84)
			DCT pin	372 (359-381)
			DCT (all)	345 (295-392)
			DCT (crack region)	386 (380-390)
JP31	5 (300°C)	11.23 mm (0.4423")	Housing	79 (76-82)
			DCT pin	282 (266-294)
			DCT (all)	253 (206-301)
			DCT (crack region)	290 (279-299)

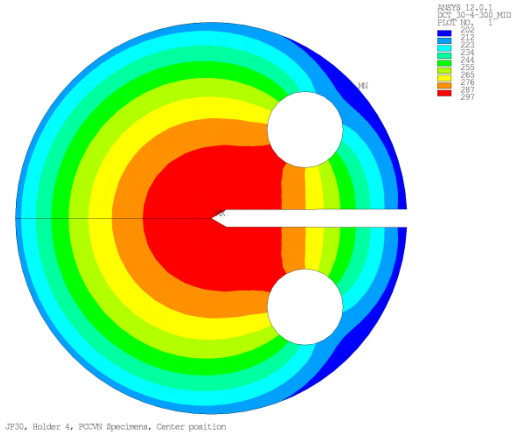

Figure 11. Contour Temperature Plot (°C) for DCT Specimens in JP30, Holder 4

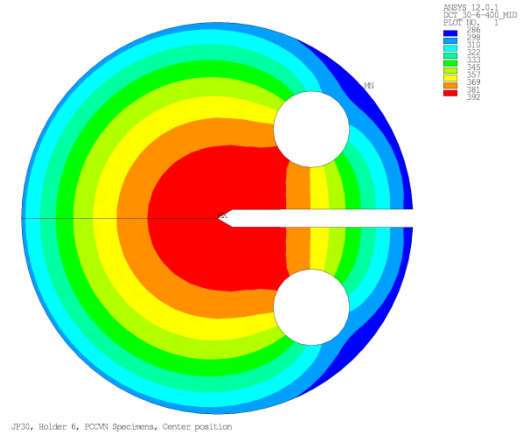

Figure 12. Contour Temperature Plot (°C) for DCT Specimens in JP30, Holder 6

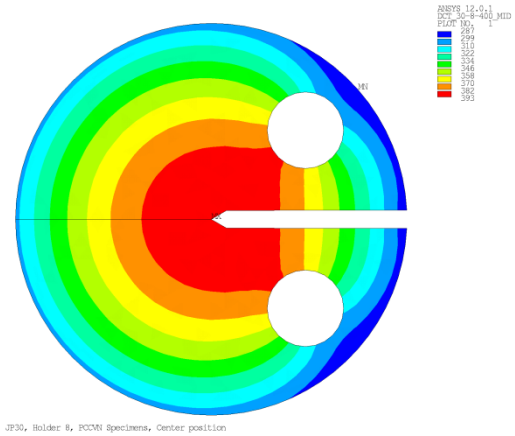

Figure 13. Contour Temperature Plot (°C) for DCT Specimens in JP30, Holder 8

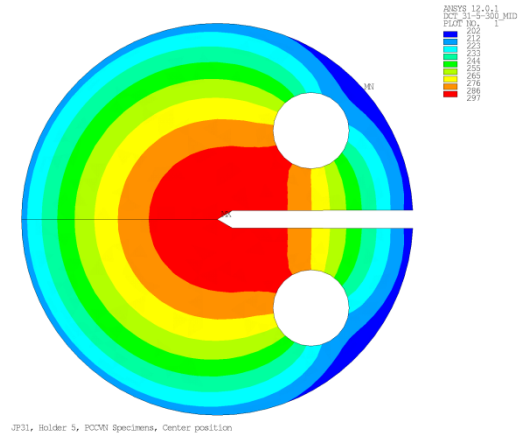

Figure 14. Contour Temperature Plot (°C) for DCT Specimens in JP31, Holder 5

PCCVN New Designs

The results of the new PCCVN region designs are described in Table 6. Figure 15 through Figure 17 show the temperature contours for the specimens and thermometry.

Table 6. Design Summary for New PCCVN Regions

Experiment	Holder (Design Temperature ºC)	Design Holder Diameter (mm)	Part	Temperature (°C) Average (Min-Max)
JP30	10 (300°C)	11.16 mm (0.4395")	Housing	72 (70-73)
			Holder	213 (201-228)
			Thermometry	314 (291-329)
			PCCVN Specimen	300 (267-325)
JP31	4 (300°C)	11.14 mm (0.4385")	Housing	70 (69-72)
			Holder	222 (209-237)
			Thermometry	312 (289-327)
			PCCVN Specimen	299 (268-324)

Table 6. Design Summary for New PCCVN Regions

Experiment	Holder (Design Temperature ºC)	Design Holder Diameter (mm)	Part	Temperature (°C) Average (Min-Max)
JP31	9 (650°C)	10.96 mm (0.4314")	Housing	77 (75-79)
			Holder	570 (536-612)
			Thermometry	662 (639-677)
			PCCVN Specimen	650 (613-676)

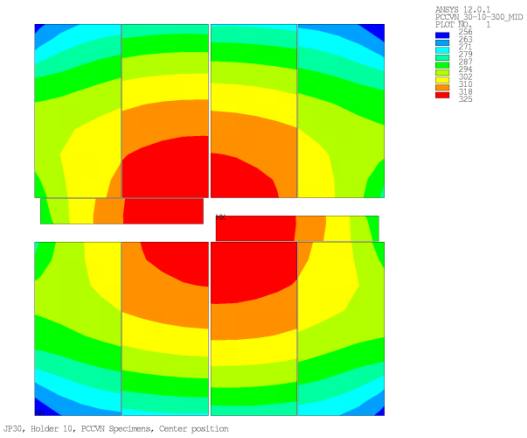

Figure 15. Contour Temperature Plot (°C) for PCCVN Specimens in JP30, Holder 10

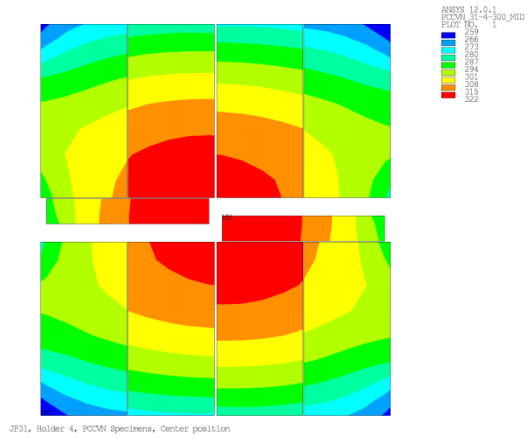

Figure 16. Contour Temperature Plot (°C) for PCCVN Specimens in JP31, Holder 4

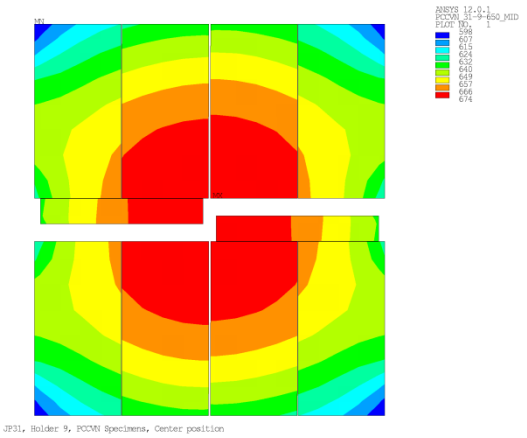

Figure 17. Contour Temperature Plot (°C) for PCCVN Specimens in JP31, Holder 9

PCCVN Repeat Designs

The results of the repeated PCCVN region designs are described in Table 7. Figure 18 through Figure 23 show the temperature contours for the specimens and thermometry.

Table 7. Design Summary for Repeated PCCVN Regions

Experiment	Holder (Design Temp ºC)	Design Holder Diameter	Part	Temperature (°C) Average (Min-Max)
JP30	5 (300°C)	11.21 mm (0.4412")	Housing	72 (71-74)
			Holder	177 (166-191)
			Thermometry	282 (259-296)
			PCCVN Specimen	267 (235-292)
JP30	11 (300°C)	11.18 mm (0.4402")	Housing	71 (69-72)
			Holder	189 (178-204)
			Thermometry	283 (261-298)
			PCCVN Specimen	270 (239-294)
JP30	12 (300°C)	11.12 mm [bottom] (0.4378")	Housing	69 (68-71)
			Holder	207 (184-230)
		11.17 mm [top] (0.4396")	Thermometry	289 (261-307)
			PCCVN Specimen	277 (241-305)
JP30	13 (300°C)	11.04 mm [bottom] (0.4348")	Housing	67 (66-69)
			Holder	225 (199-250)
		11.12 mm [top] (0.4378")	Thermometry	293 (264-311)
			PCCVN Specimen	283 (247-309)
JP31	6 (300°C)	11.20 mm (0.4408")	Housing	72 (71-74)
			Holder	186 (175-201)
			Thermometry	291 (269-305)
			PCCVN Specimen	276 (244-301)
JP31	8 (400°C)	11.08 mm (0.4362")	Housing	73 (71-74)
			Holder	299 (287-314)
			Thermometry	407 (387-419)
			PCCVN Specimen	391 (359-416)

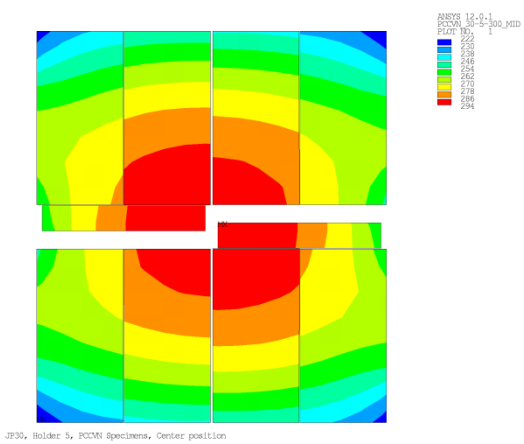

Figure 18. Contour Temperature Plot (°C) for PCCVN Specimens in JP30, Holder 5

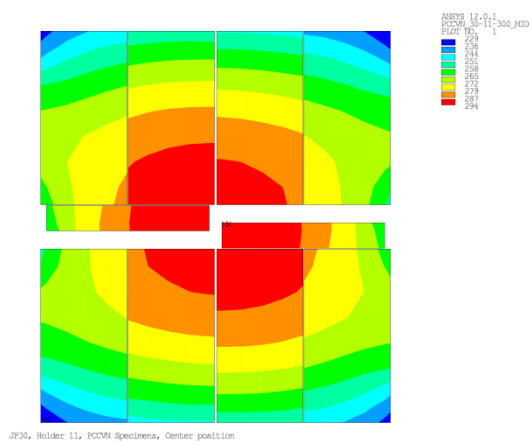

Figure 19. Contour Temperature Plot (°C) for PCCVN Specimens in JP30, Holder 11

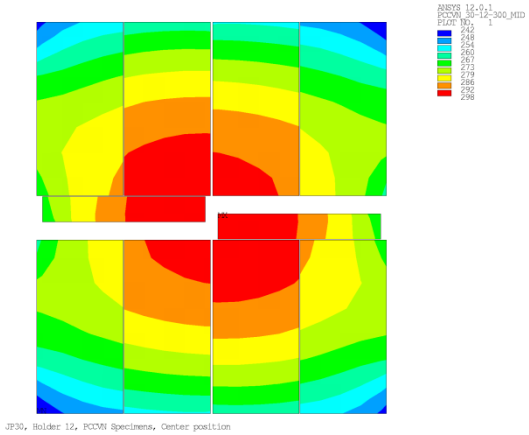

Figure 20. Contour Temperature Plot (°C) for PCCVN Specimens in JP30, Holder 12

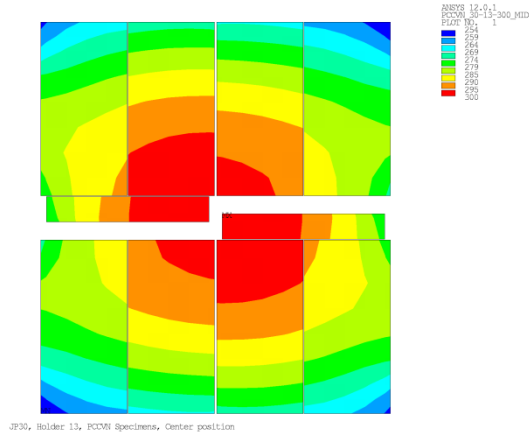

Figure 21. Contour Temperature Plot (°C) for PCCVN Specimens in JP30, Holder 13

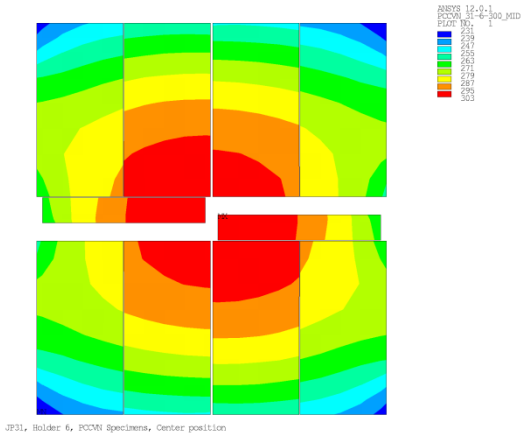

Figure 22. Contour Temperature Plot (°C) for PCCVN Specimens in JP31, Holder 6

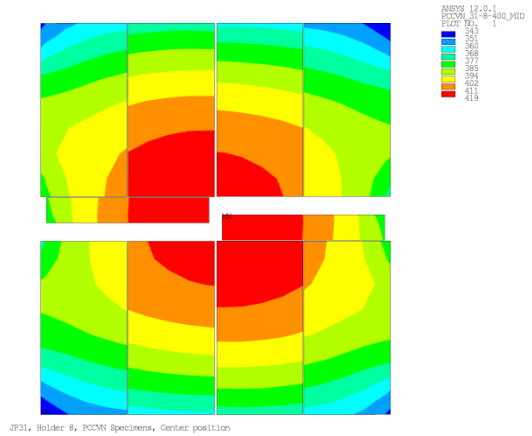

Figure 23. Contour Temperature Plot (°C) for PCCVN Specimens in JP31, Holder 8

SSJ3 New Designs

The results of the new SSJ3 region designs are described in Table 8. Figure 24 through Figure 25 show the temperature contours for the specimens and thermometry.

Table 8. Design Summary for New SSJ3 Regions

Experiment	Holder (Design Temperature ºC)	Design Holder Diameter (mm)	Part	Temperature (°C) Average (Min-Max)
JP30	9 (650°C)	10.88 mm (0.4282")	Housing	75 (74-76)
			Holder	598 (579-620)
			SSJ3 Filler	647 (632-659)
			Spring pin	678 (671-683)
			Thermometry	662 (653-672)
			APFIM Specimen	612 (595-632)
			SSJ3 Specimen	650 (635-664)

Table 8. Design Summary for New SSJ3 Regions

Experiment	Holder (Design Temperature ºC)	Design Holder Diameter (mm)	Part	Temperature (°C) Average (Min-Max)
JP31	3 (650°C)	10.69 mm (0.4207")	Housing	70 (69-72)
			Holder	612 (585-641)
			SSJ3 Filler	647 (621-669)
			Spring pin	670 (649-688)
			Thermometry	658 (636-680)
			APFIM Specimen	621 (595-649)
			SSJ3 Specimen	649 (623-673)

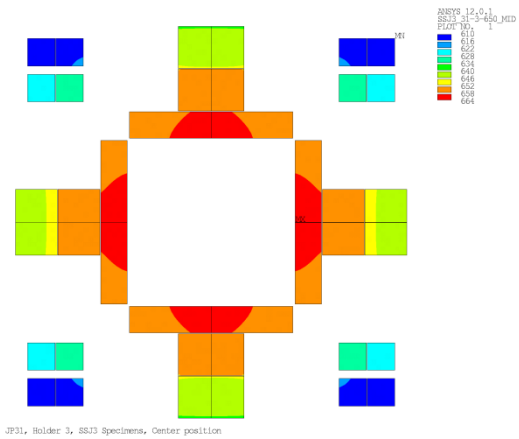

Figure 24. Contour Temperature Plot (°C) for SSJ3 and APFIM Specimens in JP30, Holder 9

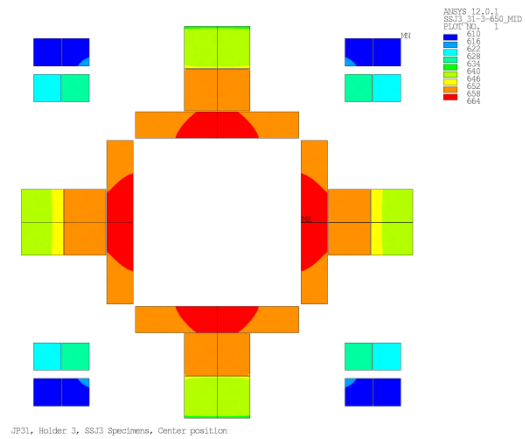

Figure 25. Contour Temperature Plot (°C) for SSJ3 and APFIM Specimens in JP31, Holder 3

SSJ3 Repeat Designs

The results of the repeated SSJ3 region designs are described in Table 9. Figure 26 through Figure 33 show the temperature contours for the specimens and thermometry.

Table 9. Design Summary for Repeated SSJ3 Regions

Experiment	Holder (Design Temperature ºC)	Design Holder Diameter (mm)	Part	Temperature (°C) Average (Min-Max)
JP30	1 (400°C)	10.67 mm (0.4200")	Housing	65 (65-66)
			Holder	363 (346-380)
			SSJ3 Filler	389 (366-410)
			Spring pin	415 (395-434)
			Thermometry	399 (378-421)
			APFIM Specimen	372 (350-396)
			SSJ3 Specimen	390 (365-413)
JP30	3 (300°C)	11.07 mm (0.4360")	Housing	68 (67-69)
			Holder	238 (232-245)
			SSJ3 Filler	281 (268-291)
			Spring pin	322 (315-329)
			Thermometry	297 (286-312)
			APFIM Specimen	254 (240-272)
			SSJ3 Specimen	283 (266-297)

Table 9. Design Summary for Repeated SSJ3 Regions

Experiment	Holder (Design Temperature ºC)	Design Holder Diameter (mm)	Part	Temperature (°C) Average (Min-Max)
JP30	7 (400°C)	10.99 mm (0.4328")	Housing	70 (69-71)
			Holder	327 (324-331)
			SSJ3 Filler	376 (366-384)
			Spring pin	424 (422-425)
			Thermometry	396 (389-405)
			APFIM Specimen	345 (333-361)
			SSJ3 Specimen	379 (364-390)
JP31	2 (400°C)	10.70 mm (0.4212")	Housing	65 (65-66)
			Holder	365 (349-381)
			SSJ3 Filler	392 (371-412)
			Spring pin	420 (401-437)
			Thermometry	403 (383-424)
			APFIM Specimen	374 (353-398)
			SSJ3 Specimen	394 (370-416)
JP31	7 (300°C)	11.12 mm (0.4378")	Housing	70 (69-71)
			Holder	232 (228-236)
			SSJ3 Filler	283 (272-291)
			Spring pin	334 (331-336)
			Thermometry	304 (295-316)
			APFIM Specimen	251 (237-268)
			SSJ3 Specimen	286 (270-298)
JP31	10 (300°C)	11.09 mm (0.4368")	Housing	69 (68-70)
			Holder	239 (234-244)
			SSJ3 Filler	285 (273-295)
			Spring pin	332 (326-337)
			Thermometry	304 (294-317)
			APFIM Specimen	256 (242-274)
			SSJ3 Specimen	288 (271-302)
JP31	12 (300°C)	11.02 mm (0.4340")	Housing	67 (66-68)
			Holder	251 (243-259)
			SSJ3 Filler	287 (273-300)
			Spring pin	324 (314-333)
			Thermometry	302 (289-317)
			APFIM Specimen	264 (249-282)
			SSJ3 Specimen	289 (272-305)
JP31	13 (300°C)	10.95 mm (0.4310")	Housing	66 (65-67)
			Holder	261 (250-272)
			SSJ3 Filler	290 (274-305)
			Spring pin	321 (307-333)
			Thermometry	302 (287-320)
			APFIM Specimen	271 (255-291)
			SSJ3 Specimen	292 (273-310)

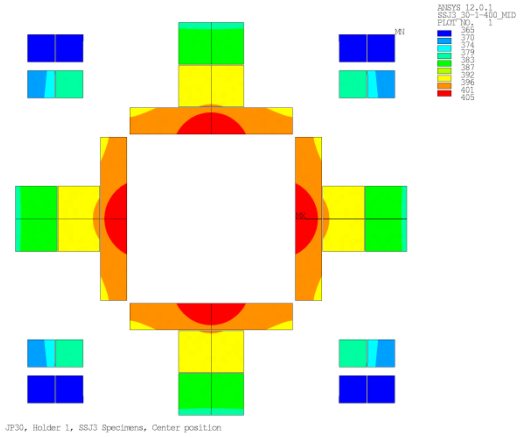

Figure 26. Contour Temperature Plot (°C) for SSJ3 and APFIM Specimens in JP30, Holder 1

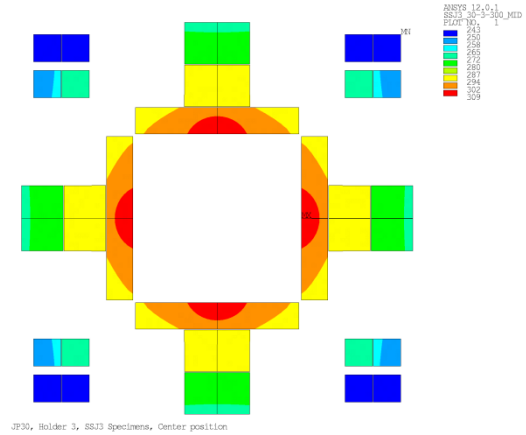

Figure 27. Contour Temperature Plot (°C) for SSJ3 and APFIM Specimens in JP30, Holder 3

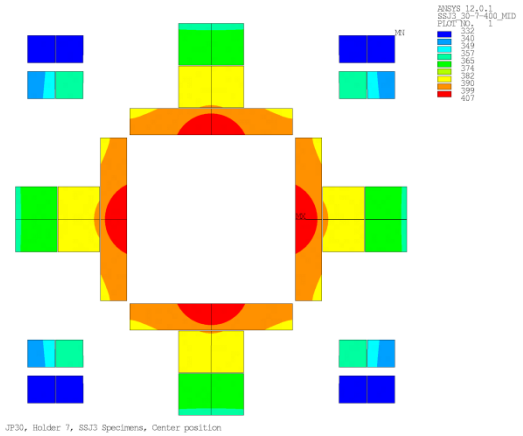

Figure 28. Contour Temperature Plot (°C) for SSJ3 and APFIM Specimens in JP30, Holder 7

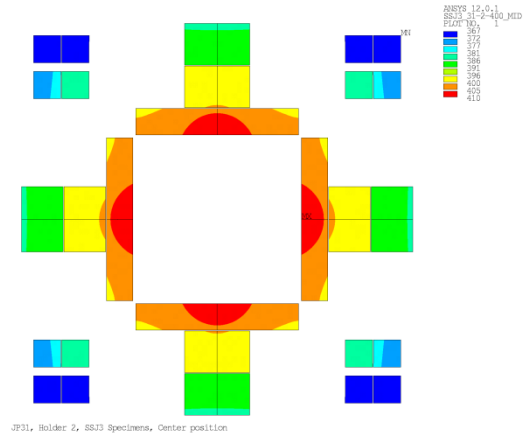

Figure 29. Contour Temperature Plot (°C) for SSJ3 and APFIM Specimens in JP31, Holder 2

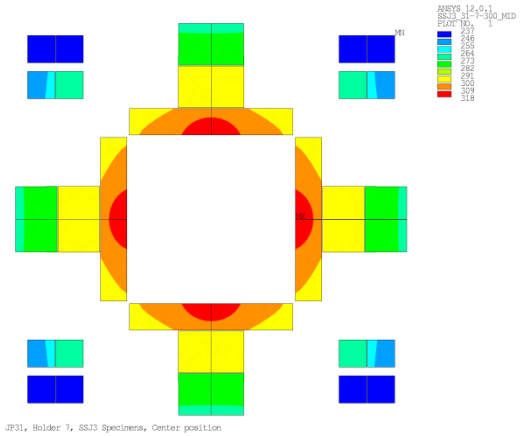

Figure 30. Contour Temperature Plot (°C) for SSJ3 and APFIM Specimens in JP31, Holder 7

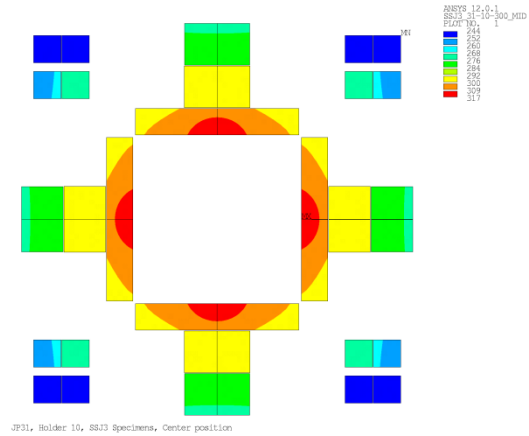

Figure 31. Contour Temperature Plot (°C) for SSJ3 and APFIM Specimens in JP31, Holder 10

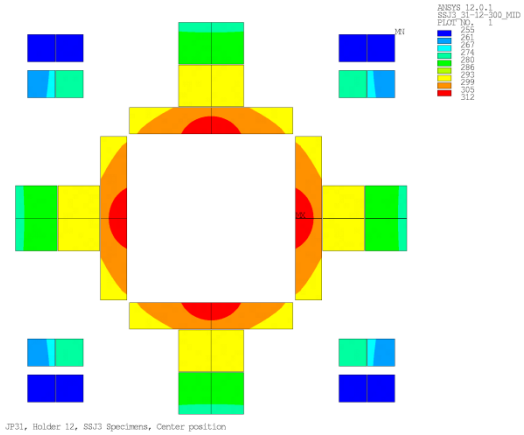

Figure 32. Contour Temperature Plot (°C) for SSJ3 and APFIM Specimens in JP31, Holder 12

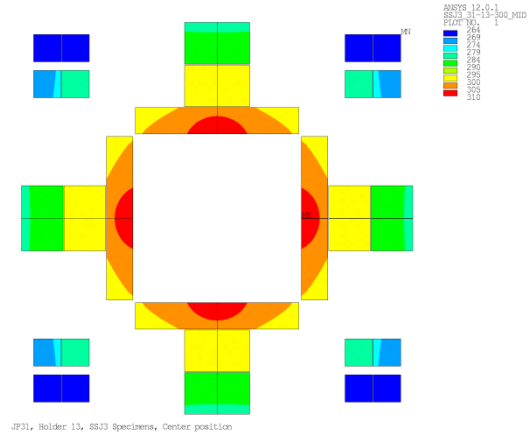

Figure 33. Contour Temperature Plot (°C) for SSJ3 and APFIM Specimens in JP31, Holder 13

TEM New Designs

The results of the new TEM region designs are described in Table 10. Figure 34 shows the temperature contours for the specimens and thermometry.

Table 10. Design Summary for New TEM Regions

Experiment	Holder (Design Temperature ºC)	Design Holder Diameter (mm)	Part	Temperature (°C) Average (Min-Max)
JP31	14 (650°C)	10.42 mm (0.4103")	Housing	67 (66-68)
			Holder	628 (602-667)
			Thermometry	671 (656-686)
			TEM Specimen	650 (630-668)

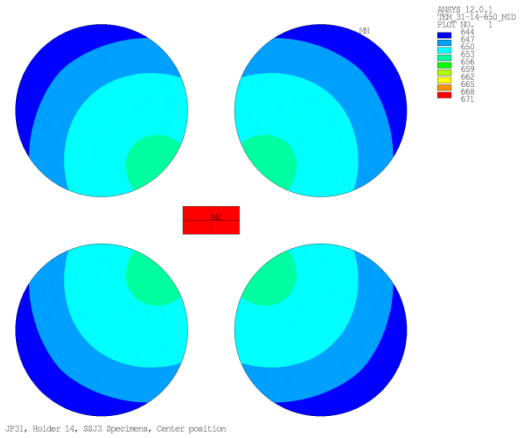

Figure 34. Contour Temperature Plot (°C) for TEM Specimens in JP31, Holder 14

TEM Repeat Designs

The results of the repeated TEM region designs are described in Table 11. Figure 35 through Figure 36 show the temperature contours for the specimens and thermometry.

Table 11. Design Summary for Repeated TEM Regions

Experiment	Holder (Design Temperature ºC)	Design Holder Diameter (mm)	Part	Temperature (°C) Average (Min-Max)
JP30	14 (300°C)	10.87 mm (0.4280")	Housing	65 (64-65)
			Holder	277 (269-289)
			Thermometry	310 (303-316)
			TEM Specimen	299 (291-306)
JP31	1 (400°C)	10.52 mm (0.4142")	Housing	64 (64-65)
			Holder	390 (379-405)
			Thermometry	418 (408-427)
			TEM Specimen	409 (398-419)

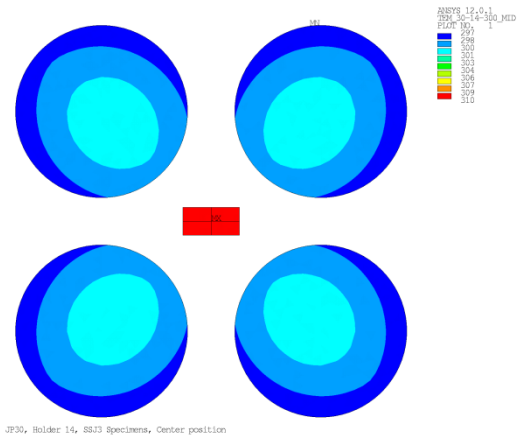

Figure 35. Contour Temperature Plot (°C) for TEM Specimens in JP30, Holder 14

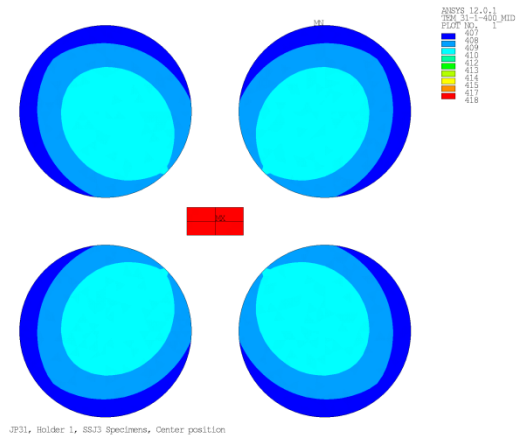

Figure 36. Contour Temperature Plot (°C) for TEM Specimens in JP31, Holder 1

Summary of Results

Table 12 summarizes the specimen temperatures for each holder in the JP30 and JP31 experiments. Shaded rows indicate new designs. Unshaded rows are re-evalutions of existing designs from the JP28/29 experiments.

Table 12. Design Summary for the JP30 and JP31 Experiments

Capsule	Holder	Design Temperature (°C)	Design Diameter	Specimen Type	Temperature (°C) Avg (Min-Max)
JP30	1	400	10.67 mm (0.4200")	APFIM	372 (350-396)
				SSJ3	390 (365-413)
	2	650	10.82 mm [1-4]* (0.4257") 10.86 mm [5-9]* (0.4274")	DCT	650 (630-666)
	3	300	11.07 mm (0.4360")	APFIM	254 (240-272)
				SSJ3	283 (266-297)
	4	300	11.23 mm (0.4423")	DCT	290 (280-299)
	5	300	11.21 mm (0.4412")	M3PCCVN	267 (235-292)
	6	400	11.19 mm (0.4405")	DCT	385 (378-390)
	7	400	10.99 mm (0.4328")	APFIM	345 (333-361)
				SSJ3	379 (364-390)
	8	400	11.19 mm (0.4405")	DCT	386 (380-390)
	9	650	10.88 mm (0.4282")	SSJ3	650 (635-664)
				APFIM	612 (595-632)
	10	300	11.16 mm (0.4395")	M2PCCVN	300 (267-325)
	11	300	11.18 mm (0.4402")	M3PCCVN	270 (239-294)
	12	300	11.12 mm [bottom] (0.4378") 11.17 mm [top] (0.4396")	M3PCCVN	277 (241-305)
	13	300	11.04 mm [bottom] (0.4348") 11.12 mm [top] (0.4378")	M3PCCVN	283 (247-309)
	14	300	10.87 mm (0.4280")	TEM	299 (291-306)
JP31	1	400	10.52 mm (0.4142")	TEM	409 (398-419)
	2	400	10.70 mm (0.4212")	APFIM	374 (353-398)
				SSJ3	394 (370-416)
	3	650	10.69 mm (0.4207")	APFIM	621 (595-649)
				SSJ3	649 (623-673)
	4	300	11.14 mm (0.4385")	M2PCCVN	299 (268-324)
	5	300	11.23 mm (0.4423")	DCT	290 (279-299)
	6	300	11.20 mm (0.4408")	M3PCCVN	276 (244-301)
	7	300	11.12 mm (0.4378")	APFIM	251 (237-268)
				SSJ3	286 (270-298)
	8	400	11.08 mm (0.4362")	M5PCCVN	391 (359-416)
	9	650	10.96 mm (0.4314")	M5PCCVN	650 (613-676)
	10	300	11.09 mm (0.4368")	APFIM	256 (242-274)
				SSJ3	288 (271-302)
	11	300	11.22 mm (0.4416")	DCT	301 (287-312)
	12	300	11.02 mm (0.4340")	APFIM	264 (249-282)
				SSJ3	289 (272-305)
	13	300	10.95 mm (0.4310")	APFIM	271 (255-291)
				SSJ3	292 (273-310)
	14	650	10.42 mm (0.4103")	TEM	650 (630-668)

Conclusions

This calculation establishes design diameters and expected specimen temperatures for the JP30 and JP31 target experiments. The JP30 and JP31 experiments are designed to irradiate F82H specimens of various sizes and types in the flux trap of HFIR at temperatures in the range of 300°C to 650°C. The specimens are typically contained within holders of either DISPAL or a vanadium alloy (V-4Cr4Ti). The primary outer containment is an Al-6061 tube with an outer diameter of 1.27 cm. Helium is used as the fill gas inside the experiment. The specimen temperature is controlled by the size of the gap between the holder and housing. This calculation documents the analyses performed to determine the size of the gas gap for each holder.

References

[1] J. McDuffee, Thermal Design Analysis for JP30 and JP31, Thermal Hydraulics & Irradiation Engineering Group, Design Analysis and Calculation (DAC), DAC-10-19-JP03, Rev. 1, 2010.

[2] S. Kim, Design Analysis for JP28/29, Thermal Hydraulics & Irradiation Engineering Group, 2004.

[3] J. McDuffee, Heat Generation Rates for JP30/31 Materials in the Flux Trap of HFIR, Thermal Hydraulics & Irradiation Engineering Group, Design Analysis and Calculation (DAC), DAC-10-01-JP01, 2010.