**9.1 Fusion Material Irradiation Test Facility (FMITS) at SNS** — M. W. Wendel and P. D. Ferguson (Oak Ridge National Laboratory)

## OBJECTIVE

The objective of this work is to investigate building an irradiation facility for fusion materials at the Spallation Neutron Source (SNS). The Fusion Materials Irradiation Test Station (FMITS) is a design concept (completed in FY 2012) for installation at the SNS. The design study showed that the first SNS high-energy irradiations on fusion materials specimens could occur in less than 3 years from project start at a cost of $10M. The project is currently unfunded.

## SUMMARY

The impact of He and H transmutation products on material damage from 14.1 MeV neutrons is a critical unresolved issue which is being addressed by combining numerical models and specialized ion and neutron irradiation experiments. Because of the uncertainties associated with both modeling and ion irradiation experiments, there is a clear need for an accessible irradiation facility that can provide near prototypic levels of transmuted helium and hydrogen. The scientific understanding obtained would also enable more effective use of a future large-volume fusion engineering irradiation facility (such as IFMIF) when it becomes available.

A design study [1,2,3] for a fusion materials irradiation test station (FMITS) for installation at the Spallation Neutron Source (SNS) has been completed. Samples would be located within two horizontal tubes in front of the mercury target. For these specimen locations, the back-scattering neutron flux spectra should be close to the ITER fusion spectrum. The PKA spectra at the FMITS samples were also compared to those for ITER, and the results show good agreement. Material damage rates would be 1.6–5.5 dpa/yr for steel, and 1.8–3.4 dpa/yr for SiC.

## PROGRESS AND STATUS

### Introduction

Computational modeling and experimental studies provide compelling evidence that displacement damage formation induced by fission neutrons and the 14.1 MeV neutrons representative of D-T fusion are quite similar [4,5]. These data largely validate the use of fission reactor experiments to explore the basic radiation stability and radiation-induced microstructural and mechanical property changes of candidate fusion reactor materials. However, helium and hydrogen production levels due to nuclear transmutation reactions are significantly higher, ~a factor of 10 to 100, with a DT neutron energy spectrum than with a fission neutron spectrum. The ratio of helium or hydrogen production to displacement damage production, e.g. He/dpa ratio, is a convenient parameter for characterizing irradiation environments. The impact of these gaseous transmutation products remains a critical unresolved issue for the use of fission reactor data in the design of future fusion reactors. The interaction of helium with both vacancy and interstitial type defects [5] may have substantial implications for radiation damage accumulation at high doses. High helium levels can lead to accelerated cavity growth on grain boundaries, which can significantly reduce creep life and fracture resistance at elevated temperatures [7].

A combination of modeling and specialized ion and neutron irradiation experiments have been and are being used to explore the sensitivity of materials to irradiation at different He/dpa ratios

[7]. In addition, experiments have been conducted using a spallation neutron source in Switzerland [8,9]. For the current fusion prime candidate ferritic-martensitic steels containing 8 to 14% Cr, some of this data suggests a strong effect of helium on fracture properties when the total helium reaches a few 100 appm [9] which would be reached in about 20 dpa in steel in a DT fusion reactor. This is much lower than the desired target dose of >100 dpa. Although ion irradiations can explore a range of He/dpa ratios, they have significant limitations: (1) only a thin region of the sample (up to a few micrometers) is irradiated, and (2) the damage rate is about 100 to 1000 times higher than DT fusion reactor irradiation. The thin irradiated region does provide microstructural information, but mechanical property information is limited to very low-load hardness measurements. The effects of high dose rate can be investigated by computational modeling, but all such modeling is also limited by the use of uncertain parameter values and is subject to our current understanding of the mechanisms by which helium and hydrogen interact with the other radiation-induced defects.

Because of the uncertainties associated with both modeling and ion irradiation experiments, there is a clear need for an accessible irradiation facility, such as that proposed here for the Spallation Neutron Source (SNS) accelerator, that can provide near prototypic levels of helium and hydrogen for screening candidate fusion materials. For the Fusion Materials Irradiation Test Station (FMITS) a modest range of He/dpa ratios would be accessible to help calibrate and verify the modeling studies. In Fig. 1, the 2-4 year irradiation at SNS running at 1 and 1.4 MW is compared with data from other facilities (Rotating Target Neutron Source, RTNS; Material Test Station, MTS; International Fusion Materials Irradiation Facility, IFMIF). An SNS facility would provide the opportunity for the US program to take the scientific lead in this critical area of fusion structural materials development. The scientific understanding obtained would enable more effective use of a future large volume fusion engineering irradiation facility when it becomes available. By exploiting the understanding gained from low-to-intermediate dose data and from modeling, the US program could optimize material choices for use in future machines. More fundamental experiments could be employed in concert with fission reactor data and modeling to confirm the expectation that the high-energy tail in the neutron energy spectrum has only limited impact on material properties.

**System Design and Key Performance Measures**

An initial set of requirements was established for the design study representing the optimal use of the existing SNS configuration, operating at 1 or 1.4 MW and 1 GeV proton energy, to benefit fusion materials irradiation while minimizing the impact on the main mission of neutron science. The performance described here complies with those requirements.

The primary goals for irradiation at the sample locations (based on iron samples) are for up to 5 dpa/year, 10–80 appm-He/dpa ratio, and less than 150 W/cc thermal power dissipated within the sample. Two sample regions would be provided, typically of a size 12-mm-diam by 175-mm-long which has proven useful for metallurgical test specimens irradiated at the High Flux Isotope Reactor (HFIR) [11]. The sample environment control will use similar methods developed for HFIR with temperature ranges from 25–600°C, and 50°C temperature temporal and spatial uniformity required on any given sample.

Instrumentation would be based on the instrumentation in HFIR irradiation capsule designs to be compatible with the SNS EPICS control/data acquisition system with up to five

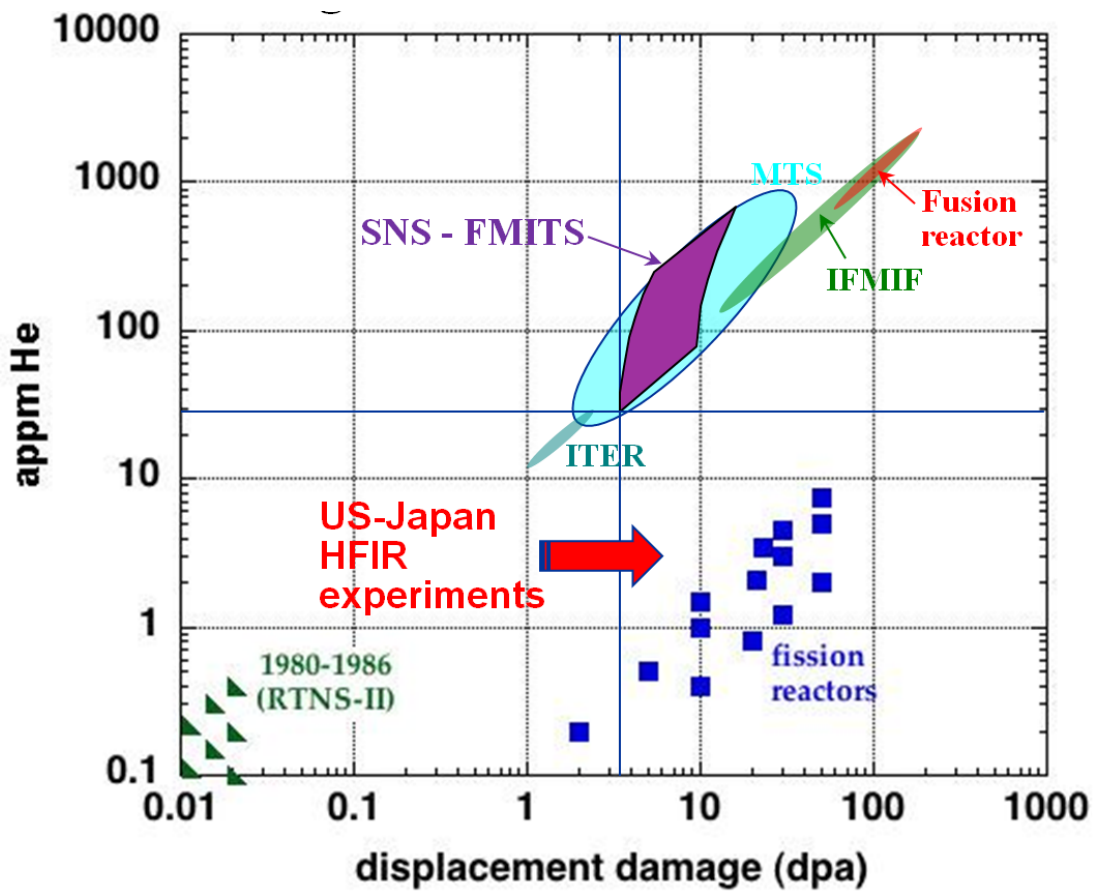


***FIG. 1. Comparison of 2-4 year helium and displacement damage levels for ferritic steels for candidate irradiation facilities (adapted from [10]).***

thermocouples in each of the two sample regions. Temperature would be thermocouples in each of the two sample regions. Temperature would be controlled by thermocouples in each of the two sample regions. Temperature would be controlled by varying the gas composition (thermal conductivity) in a precisely specified gap between the constant-temperature sample region and the water-cooled heat sink. The design would allow for unmanned operation with machine failure protection and no impact to the safety and reliability of the SNS facility. A comprehensive failure mode overview shows that the Credited Engineering Controls (CECs) or safety basis for SNS would not be impacted.

The FMITS assemblies would be compatible with existing SNS Target Service Bay remote handling equipment and systems and amenable after irradiation for reuse, sample extraction and waste disposal. Multiple irradiation periods on consecutive targets would be possible in order to increase exposure on a given sample arrangement. An option for quick removal of the irradiation system from the target would be available in case of failure. Normal target replacement downtime would not be extended due to the FMITS installation/replacement operations. The initial installation of the FMITS hardware including replacement shield block and gas utilities would not require any shutdown period beyond the normal bi-annual scheduled SNS outages.

This study also provides options for sample extraction from the irradiated FMITS assembly, which depend on the time available for the extraction at SNS. The most expedient option would likely be selected in a conceptual design, keeping the samples within their stainless steel coolant tubes for shipment and extraction offsite. The sample sections would be shear cut and placed into a 110-gallon drum with lead shielding. A suitable drum is already available at SNS and has been used for removing post-irradiated stainless steel target samples.

**Experimental Design**

FMITS sample regions are contained within a harness that wraps around the existing SNS target as shown in Fig. 2. The two sample regions may be located in different irradiation zones depending on their offset from the proton beam centerline which could vary from 2 to 5 cm. Figure 3 shows the contents of the FMITS tubes in detail. The test specimens would be spring-loaded into holders that would be stacked within an inner stainless steel tube, which would then be welded into the assembly. This inner tube would be flooded with inert gas mixture to control the temperature by varying the mixture thermal conductivity. Cooling water would flow from the target water shroud through the annulus between the inner and outer FMITS tubes. The thermocouples would be threaded down the centerline through the specimen holders and terminated within the holder test zones.

The water shroud that surrounds the mercury target module would be modified to accommodate the FMITS inlet and outlet tubing that is routed through the target/core-vessel seal (circular ring in Fig. 2). The modified shroud is necessary because of the tight fit of the shroud rear section (shown in grey in Fig. 2) to the outer reflector assembly. All of the FMITS hardware shown in Fig. 2 is removable and reusable on subsequent targets if required.

The supply of the two inert gas constituents for each of the two capsule regions is provided by the four connections on the backside of the target seal (Fig 2). The gas supply and control system would be located in a basement room and piped in through existing ports in the target process bay which are currently unused. Only two exhaust lines are necessary since the gases are mixed just upstream of the capsules. The irradiated exhaust gases would be discharged into the process bay air, which is controlled and released out of the stack. It is possible that a delay tank would be necessary before releasing the gases into the process bay. The cooling water would be pulled from the existing target shroud coolant system (a 10% effect) and monitored with a flow sensor on the backside of the target seal.

At FMITS, the back-scattering neutron flux spectra from the mercury target closely resemble the ITER fusion spectrum as shown in Fig. 4. The agreement is limited to neutron energies less than 10 MeV, and the ITER spectrum spikes at 14.2 MeV before abruptly ending at 15.7 MeV. The neutron flux in the FMITS spectrum, however, continues to decline with the increasing neutron energy unto the incident proton energy 1 GeV. The neutron flux spectrum at 3 cm off the centerline at FMITS shows higher neutron fluxes for neutron E > 10 MeV than that at 5 cm due to the higher incident proton flux at that location. The PKA spectra at the FMITS samples also show good agreement with those at ITER.

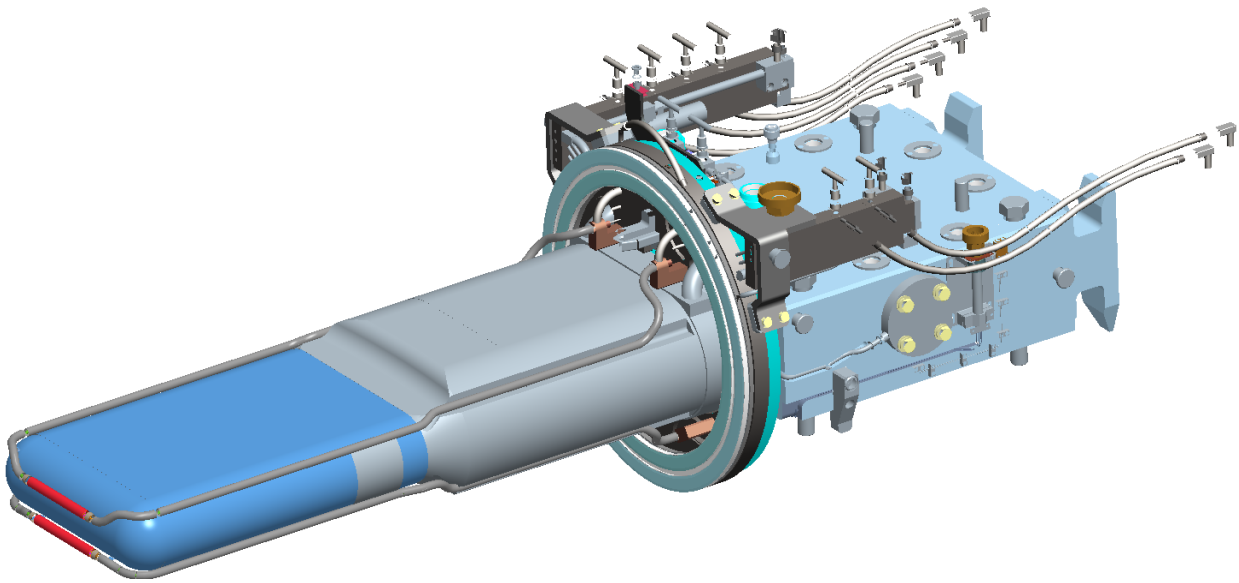

***FIG. 2. FMITS assembly installed onto an SNS target module.***

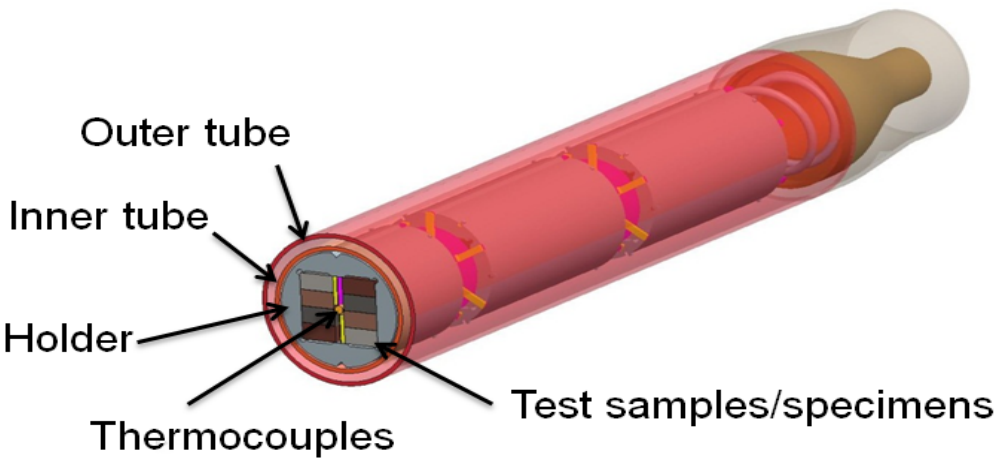


***FIG. 3. FMITS test section containing irradiation material samples.***

**Neutronics Analysis**

The FMITS peak displacement production rate is 5.5 dpa/yr for steel and 3.4 dpa/yr for SiC, where the neutron contribution is 58% and 90% for steel and SiC, respectively. Figure 5 shows that the peak helium production rate is 409 appm/yr for steel (7.5% neutron contribution) and 334 appm/yr for SiC (31% neutron contribution). The peak hydrogen production rate is 1700 appm/yr for steel (12% neutron contribution) and 492 appm/yr for SiC (18% neutron contribution). In a spallation spectrum the helium/displacement or hydrogen/displacement production ratio exhibits a very wide range. For the majority of the sample locations, the helium/displacement production

ratio in steel is 75 and 20 appmHe/dpa for vertical offsets from the target centerline of 3 cm and 5 cm, respectively. The same numbers are 98 and 37 appmHe/dpa for SiC samples at 3 cm and 5 cm offsets.

The neutron contribution to a certain radiation damage production (displacement, helium or hydrogen) depends on the incident neutron and proton flux spectra and its production cross sections for a certain material. Generally, the neutron contribution is lower at the sample rod closer to the target centerline, where it is bombarded with more intensive proton fluxes. The neutron contribution is generally lower in steel than in SiC.

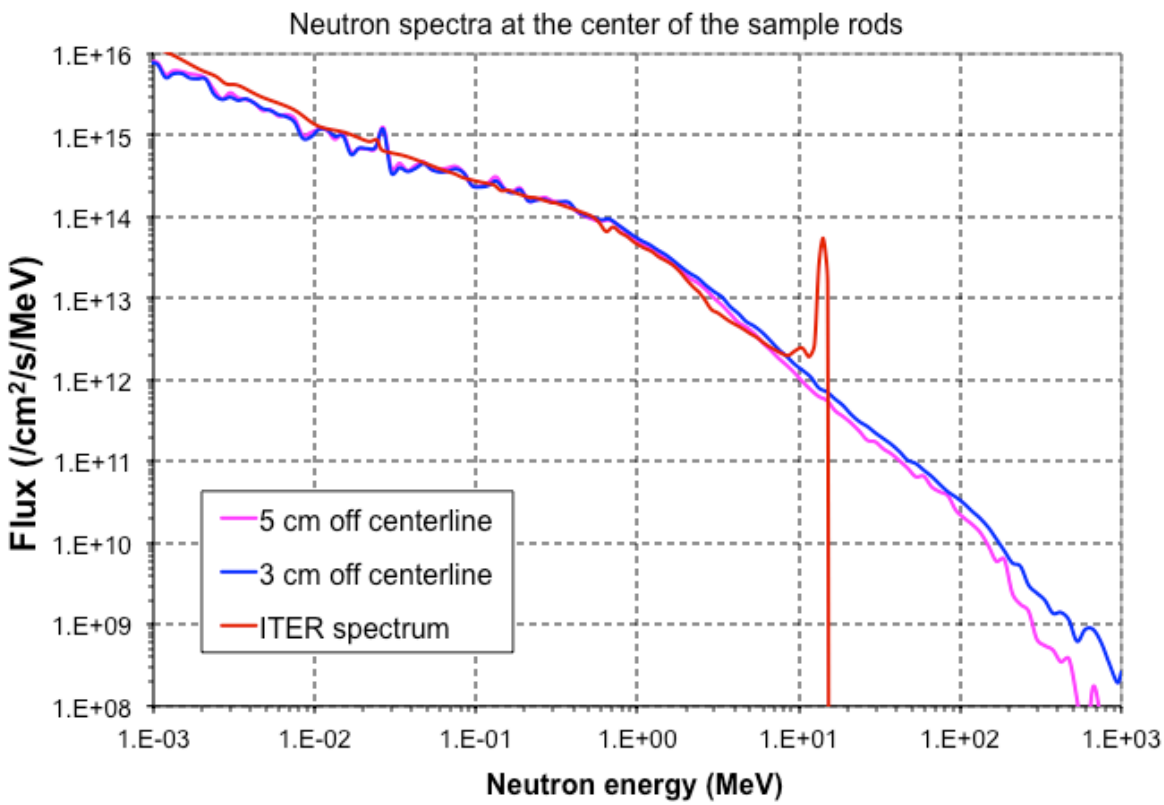


***FIG. 4. Comparison of neutron flux spectra for FMITS and ITER.***

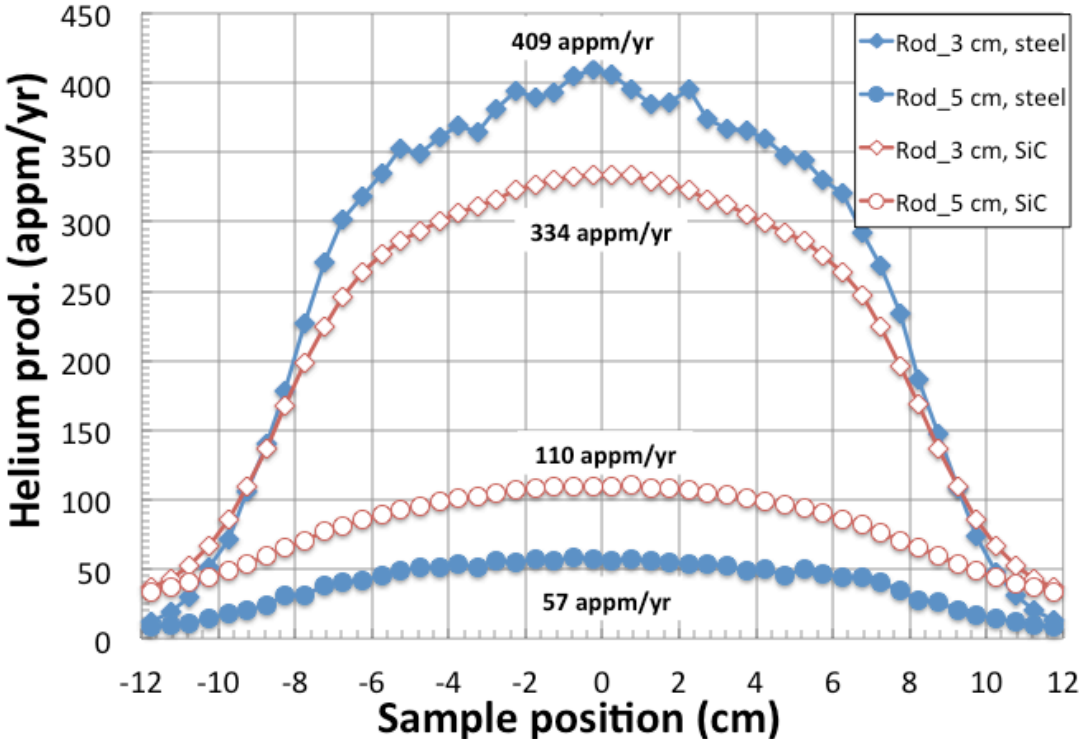


***FIG. 5. Helium production rates for steel and SiC samples at FMITS at a nominal beam power of 1.4 MW at SNS.***

**Safety, Off-normals, and Potential Impacts on SNS Mission**

A comprehensive evaluation (including some engineering analysis) of off-normal events was performed. The hazard analysis in the SNS safety documentation was also revisited, and no major problems were identified. Hypothetical hazards in the FMITS system were categorized as: (1) water system hardware failures, (2) gas system hardware failures, and (3) remote handling mishaps. A quantified risk assessment remains to be done in the final design phase.

Based on comments made by the FMITS Design Study Review Committee, The Accelerator Advisory Committee, and discussions with key staff in the ORNL Fusion Materials Program and at SNS, the potential impacts to SNS/ORNL operations can be summarized as follows:

1. An unscheduled target replacement will be prolonged by as much as 4 days.

2. Possible 1-2 weeks down time will be required to remove FMITS following potential unanticipated hardware malfunctions.

3. There exists an incremental increase in the frequency of remote handling equipment failures and human errors due to increased operational load.

4. Rare events may occur that can be imagined but cannot yet be excluded.

It is expected that as the actual design proceeds, the potential for these impacts will be significantly reduced or eliminated altogether. In order to minimize potential operational outages due to the presence of FMITS, the following precautions have been included in the proposed cost/schedule:

1. A remote handling mockup of FMITS with be used for procedural development and technician training.

2. Improvements will be made to the design concepts of FMITS to reduce the installation time, such as quick-disconnect fittings.

3. Contingency strategies will be developed for given scenarios such as choosing not to reinstall FMITS during an unscheduled outage, or in a scheduled outage if some sensors have already failed.

4. The sensors and connections will be qualified to 100% compliance criteria immediately prior to installation of FMITS.

**Costs and Schedule**

The total estimated one-time cost for the test facility is $6.7 million, nearly equally divided between labor and materials. Because the design is still at a conceptual level and vendor quotes have not been obtained, a 50% contingency was applied, giving a total estimated project cost of $10 M.

Design time and hardware costs were estimated at the component level and by project phase. The costs for remote handling were based on the experience over the last 5 years of SNS remote handling operations, including 5 target and 2 proton beam window replacements. The target modules are relatively expensive and it is assumed that the FMITS project would pay for the changes to the target module required to attach the FMITS assembly.

The schedule is for 30-months of design, fabrication, and installation, but could be prolonged if funding is provided at a slower rate. The plan requires 18 months of design and a midway review before procurement begins. In parallel with the design work, mockup testing for hydraulic performance and remote handling would be necessary. The 14-month target fabrication is on the critical path for the FMITS schedule, so an early release to begin the target fabrication is very beneficial.

It is possible to complete all of the installation work without affecting the SNS beam-time operational plan. The FMITS assembly would be installed with its utilities and connections during a normal 6-week shutdown. Waste disposal from the installation would occur during beam operations. Installation of the gas system in the basement of the target building is accomplished ahead of time while neutron production is occurring. The existing remote handling staff would be utilized to perform all operations within the target process bay.

A preliminary estimate is also provided for the cost of performing a specific irradiation experiment at the new FMITS facility. For a given experiment there is a cost for fabrication, installation and irradiation of the experimental hardware on a single target module. There is an additional, incremental cost for the assembly use with subsequent targets. The total for the first irradiation is $850K including 25% contingency. For each following target cycle the cost is $127K including 25% contingency.

## CONCLUSIONS

Sufficient design work has been completed in this study to give the design team confidence that FMITS can be operational within $10M and as little as 30 months. Subsequently, each FMITS experiment would cost $850K to be used at the new facility. Findings from a Design Review Committee corroborate this conclusion. Design, fabrication, installation and operation all appear to be within known capabilities. No “showstopper” safety issues have been identified. The similarity to HFIR irradiation experiments and conditions allows much of the expertise developed there to be incorporated at SNS. The proposed design has no significant impact on the neutronic performance of the moderators, and therefore should not affect the quality of the neutron science. Installation activities can be accomplished without any additional shutdown periods beyond normal schedule plans.

## REFERENCES

[1] A. Abdou, R. Battle, M. Dayton, D. Freeman, W. Lu, T. McManamy, P. Rosenblad, R. Stoller, and M. Wendel, SNS Fusion Materials Irradiation Test Station (FMITS) Design Study, December 30, 2011, SNS-NFDD-ENG-TD-0003-R00, Oak Ridge National Laboratory.

[2] M. Wendel, M. Dayton, W. Lu, T. McManamy, P. Rosenblad, and R. E. Stoller, IAEA 2012 Fusion Energy Conference, FTP/P1-27, October 8-12, San Diego, CA.

[3] W. Lu, T. J. McManamy, P. D. Ferguson, and F. X. Gallmeier, 11th International Workshop on Spallation Materials Technology (IWSMT-11), Gent, Belgium, Nov. 5-9 2012.

[4] R. E. Stoller and L. R. Greenwood, *J. Nucl. Mater.* **271–272** (1999) 57–62.

[5] A. Horsewell, B. N. Singh, S. Proennecke, W. F. Sommer and H. L. Heinisch, *J. Nucl. Mater.* **179–181** (1991) 924–927.

[6] D. M. Stewart, Yu. N. Osetskiy, and R. E. Stoller, *J. Nucl. Mater.* **417** (2011) 1110–1114.

[7] D. N. Braski, H. Schroeder, and H. Ullmaier, *J. Nucl. Mater.* **83** (1979) 265–277.

[8] G. R. Odette and D. T. Hoelzer, *JOM* **62** (2010) 84–92.

[9] P. Spaetig, R. Stoenescu, P. Mueller Pablo, G. R. Odette, and D. Gragg, *J. Nucl. Mater.* **386–388** (2009) 245–248.
[10] T. Yamamoto, G. R. Odette, H. Kishimoto, J-W. Rensman, and P. Miao, *J. Nucl. Mater.* **356** (2006) 27–49.
[11] FESAC Panel Report on Materials Science Opportunities, DOE/SC-0149, (2012) 69.
[12] A. Hishinuma and S. Jitsukawa, *J. Nucl. Mater.* **169** (1989) 241–248.