4.3 High-Heat Flux Testing of Low-Level Irradiated Materials Using Plasma Arc Lamps —

A. S. Sabau, E. K. Ohriner, Y. Katoh, and L. L. Snead (Oak Ridge National Laboratory)

OBJECTIVE

The objective of this work is testing of irradiated materials that are candidate of divertor component materials and mock-up divertor components under high-heat flux using Plasma Arc Lamps (PAL).

SUMMARY

A neutron-irradiated tungsten specimen was successfully tested at ITER-relevant high-heat flux conditions using Plasma Arc Lamp at ORNL on Aug. 14, 2013, without any contamination outside the testing box, ensuring the readiness of the new facility for irradiated samples. For thin specimens, often used for studies of neutron irradiation effects, one of the main challenges to the PAL systems is the measurement of the sample temperature.

PROGRESS AND STATUS

Effort was conducted on three main areas: (a) enhancing the RAD safety during testing of irradiated specimens, (b) enhancing the measurement accuracy of the sample temperature, and (c) conducting high-heat flux testing with non-irradiated specimens and neutron-irradiated specimens.

Results for enhancing the RAD safety during high-heat flux testing of irradiated specimens

The current efforts for enhancing the RAD safety during testing of irradiated specimens included:

- Design and fabrication of a new cooling rod that will enable a 3X increase in the coolant flow rate.
- Design of an additional sealed chamber enclosing the cooling rod, specimen holder, and irradiated specimen.
- Fabrication of the sealed chamber enclosing the specimen holder and irradiated specimen.
- Enhancing the automatic pressure controller – for Ar inlet and outflow - to regulate the vacuum pressure to approximately 4 psi in the test section during HHF testing to prevent the liftoff of main quartz window and escape of RAD gases.

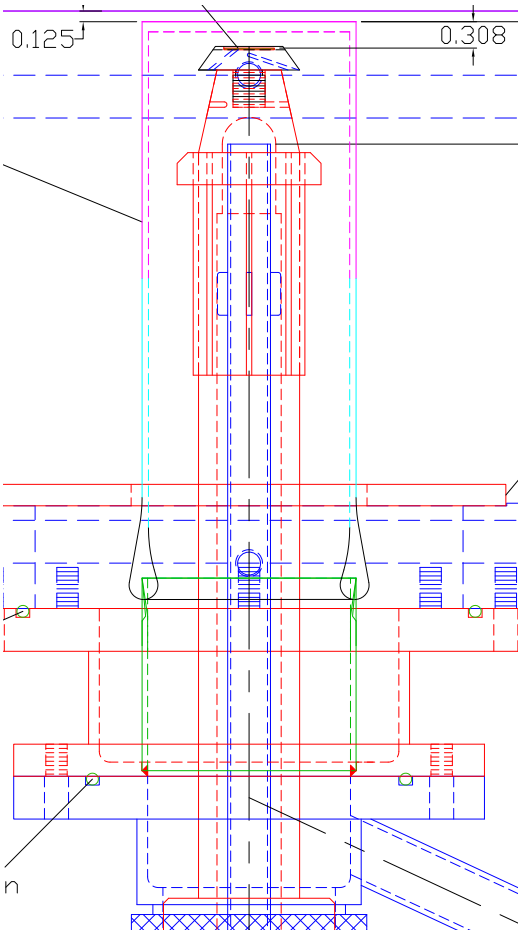

Figure 1. Drawing of the additional sealed chamber to confine contamination to the quartz-glass cylinder surrounding the cooling rod. The main test chamber will NOT be contaminated, lowering the maintenance and operational costs.

Color legend for the cylinder that comprises the sealed chamber:

1. magenta – indicate quartz cap and quartz tube surrounding the top region of the cooling rod,
2. light blue – graded quartz to glass region, and
3. green – glass region; the glass is fused on the bottom to a steel flange to insure vacuum tight conditions.

Results for enhancing the temperature measurement

The current efforts for enhancing the temperature measurement during testing of irradiated specimens included:

- Assessment of pyrometer applicability in the actual PAL conditions.
- Use of a second generation of molybdenum specimen holder, for which the thermocouples could be installed closer to the backside surface of the specimen.
- Machining of 2G v2 Mo specimen holders with four thermocouples.
- Conduct calibration experiments in which the pyrometer was used to measure directly the temperature the W specimen surface while a thermocouple was welded on the backside of the W specimen.

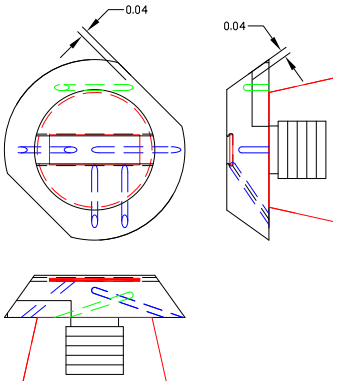

Figure 2. Specimen holder designed with two side thermocouples for direct measurement of the temperature of the specimen.

Using a specimen holder with two side thermocouples would enhance the evaluation of the specimen temperature during high-heat flux testing. The thermocouples that would be inserted from the side of the specimen would directly impinge onto the specimen, providing more accurate temperature data.

Clamping the specimen onto the substrate is the best option for high-heat flux testing. However, due to the large area covered by the incident heat flux from the plasma-arc lamp, the design of the clamping fixtures is not trivial as they would heat during testing, while on the other hand, there is limited cooling available to the fixtures. Due to different thermal expansion, the clamping fixture cannot be bolted to both sample and cooling rod, resulting in lack of disk cooling. In this reporting period, several attempts were made to design such fixtures in preparation for the upcoming high-heat flux testing that will be conducted in January/February 2014 at ORNL in collaboration with Dr. Kazutoshi Tokunaga for the PHENIX program.

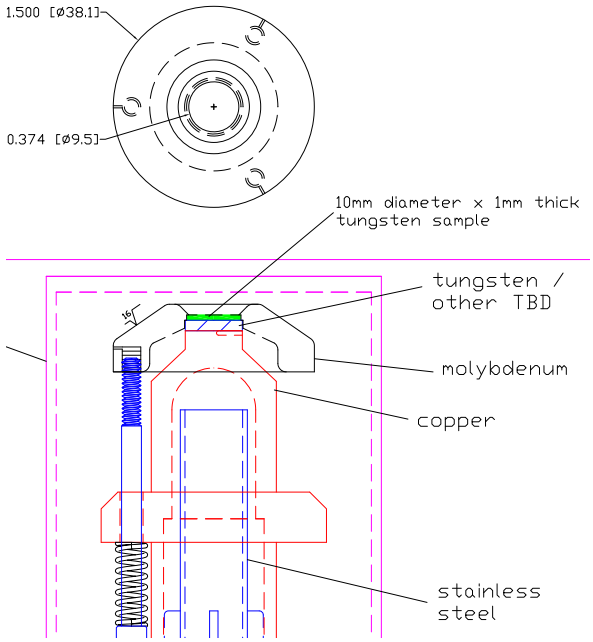

Figure 3. Conceptual drawing of a disk-screw clamp fixture (design phase is ongoing). The following features can be pointed out for this current design:

- Springs allow the control of the clamping force, for fixed clamping, the springs can be removed.
- Springs were placed in low temperature regions for durability and performance.
- Top disk may still absorb more energy that it can dissipate by thermal radiation.
- The top surface includes a conical area to reduce energy absorption.
- Disk cutouts (not drawn) will further minimize energy absorption.

A calibration run was first conducted when a thermocouple was welded to the backside of a non-irradiated tungsten specimen, providing direct measurement of its temperature. For this calibration run, the specimen-reflector distance was 2 cm, the incident heat flux was about 3.2 MW/m^2 for 30 s, while the absorbed heat flux was into the specimen was approximately 1.6 W/m^2 (approx. 50% of the incident heat flux). Two holes were drilled in the Mo holder for insertion of thermocouples close to the backside surface of the specimen. The placement of thermocouple tips is shown for the sake of completion to aid in data interpretation (Figure 4a). Although not shown in Figure 4a for the sake of clarity, the closed hole for the thermocouple in the center of the specimen was opened for the calibration runs. The specimen temperature is showed in Figure 4(a) with open circle symbols. This data shows an actual increase from room temperature to 1,000°C in the first 2 s. The data shown in Figure 4 indicate the following:

1) The pyrometer data is affected by the infrared energy from the PAL during high-energy pulses. The proof of artifact is the sharp raise and drop in pyrometer temperatures right at the onset and end of pulses. The fact that the temperature varies during the high energy indicates that the reflections from the PAL into the pyrometer, which creates the artifact at high-energies, is not dominant and thus it can be corrected.
2) The pyrometer data is not affected by the infrared energy during the idle period, after the end of high-energy pulses. The pyrometer temperature at idle has the similar temperature ranges as those measured by thermocouples inserted in the 1G Mo holder.

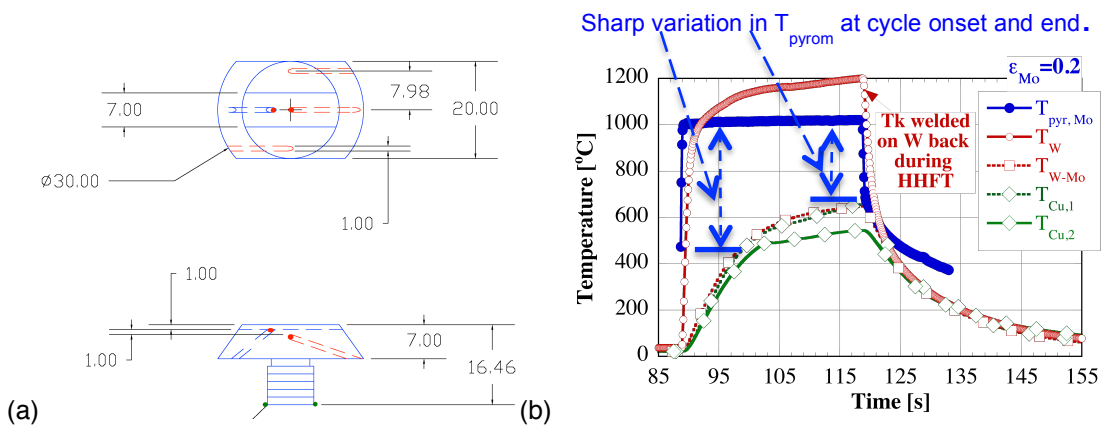

Figure 4. Data on HHFT of an non-irradiated specimen for calibration of specimen temperature: (a) 2nd generation of Mo specimen holder dimensions (thermocouple tips close to the specimen are shown with red dots (b) Temperature measured by the pyrometer on the side surface of holder ($T_{pyr,Mo}$) thermocouple welded on tungsten specimen back surface during HHFT (T_W), thermocouple between tungsten specimen and holder (T_{W-Mo}), and thermocouples in the cooling rod at the ends of holder thread.

From the data shown in Figure 4, it is inferred that there would be a temperature difference between that measured by the pyrometer and that by the welded thermocouple on the backside of the tungsten specimen of approximately 490 and 400°C, as estimated right when the pulse ended and 0.5 s after the pulse ended (to account for the pyrometer response time of 0.3 s),

respectively. On the other hand, there would also be a temperature difference of approximately 553°C between the welded thermocouple and the thermocouple inserted in the open hole, but not welded to the specimen.

High-heat flux experiments

Neutron-irradiated tungsten specimens were successfully tested at ITER-relevant high-heat flux conditions using Plasma Arc Lamp in August 2013 (Figure 5):

- One irradiated specimen was exposed to 81 pulses and the second one to 200 pulses at 3.3 MW/m^2 incident heat fluxes (1.65 MW/m^2 absorbed), 20 s duration, 100 s dwell time between pulses.
- No contamination was recorded outside the testing box.
- No radioactive gases leaked out of the testing box as the "negative" gauge pressure in the test enclosure was successfully maintained for the entire duration of the test of 4 h.

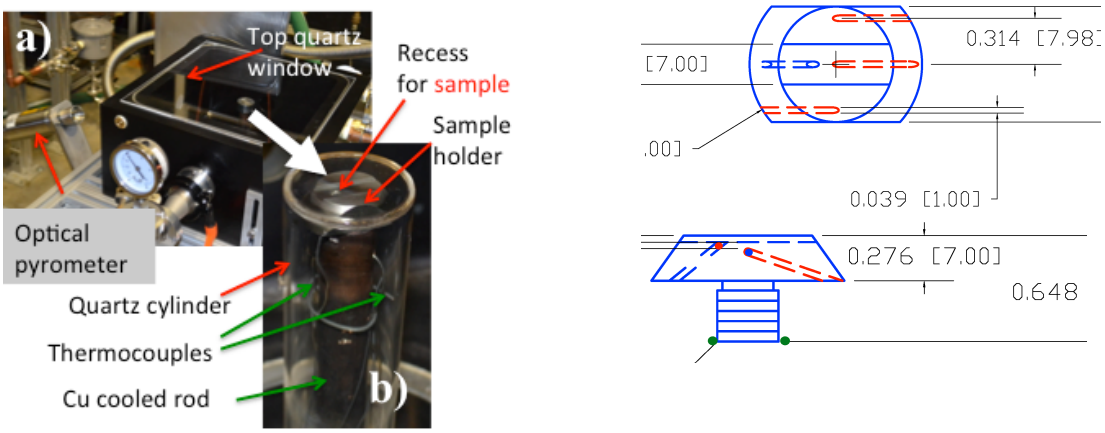

Figure 5. Experimental setup for: (a) the entire test section, (b) specimen holder and cooling rod, and (c) thermocouple placement within the sample holder.

The first irradiated tungsten specimen S1 was exposed to 80 high-heat flux cycles (Figure 6a) while the second specimen, S2, was exposed to 200 cycles. For S1, the operating parameters of the HHFT were varied for the first several cycles such that the maximum thermocouple temperatures would be limited to 700 to 800°C while allowing appropriate time for cooling (Figure 6b). According to the calibration data, this would translate to specimen temperatures of approximately 1,250 to 1,350°C (Figure 7).

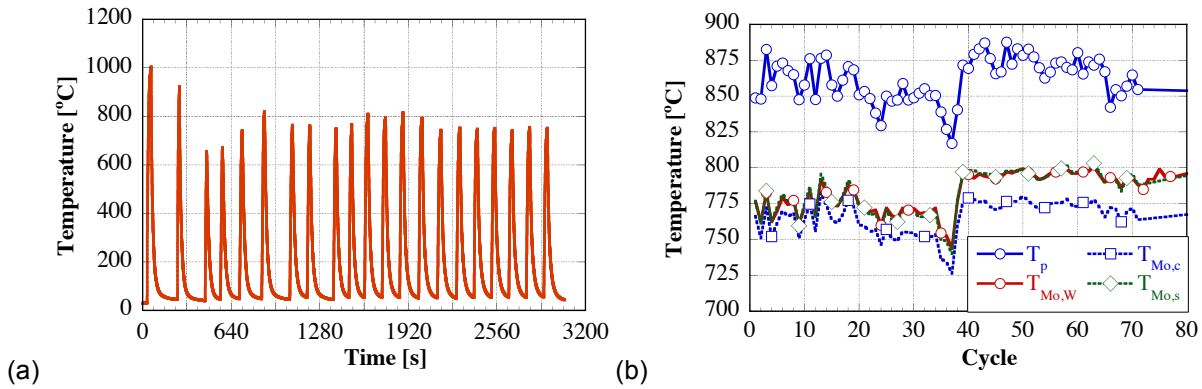

Figure 6. Measured temperatures (a) at W-Mo interface for the first 21 pulses for the first sample and (b) maximum temperature measured by the pyrometer on the side surface of Mo holder (T_p), thermocouple on back surface of W specimen in the open hole ($T_{Mo,W}$), thermocouple in the center of the sample holder ($T_{Mo,c}$), and thermocouple on the side of the sample holder ($T_{Mo,s}$). Sample temperature was expected to be approximately 1,200-1,300°C.

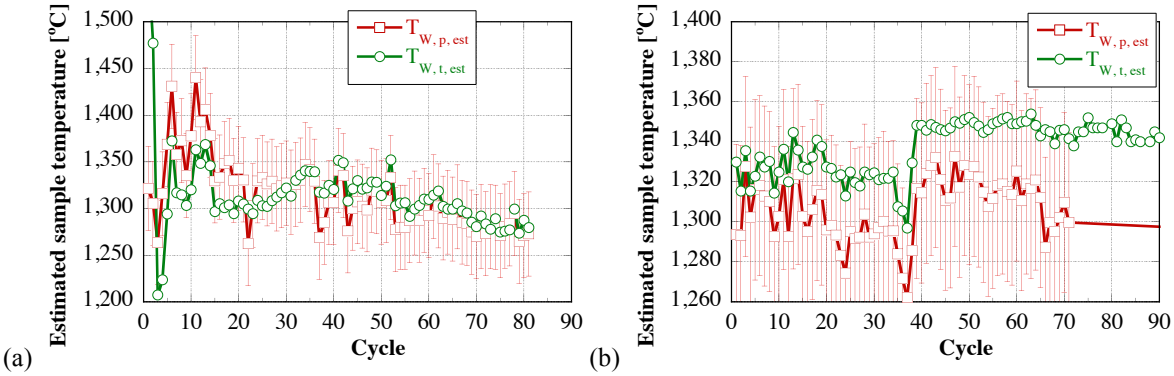

Figure 7. Estimated maximum temperature of the tungsten material for (a) specimen S1 and (b) specimen S2 (only 90 cycles out of 200 shown for the sake of clarity).

ACKNOWLEDGMENTS

The authors would like to thank Charles Ross (Chuck) Schaich for assisting with CAD design, fabrication specifications, and assembly; Jim Kiggans for design and fabrication of the Al enclosure, Alta Marie Williams for radiation safety considerations, and David Harper for operating the PAL.