9.1 Fusion Material Irradiation Test Station (FMITS) at SNS — Mark Wendel and Phil Ferguson (Oak Ridge National Laboratory)

OBJECTIVE

The Fusion Materials Irradiation Test Station (FMITS) is a planned irradiation facility at the Spallation Neutron Source (SNS). The objective of the current effort is a Concept Design (30% level) to quantify the risk to normal operations and safety at the SNS. The deliverables are a Concept Design Report, Concept Design Review, and a Safety Assessment. The original study of FY2012 estimated a total project cost of $10M over a 3-year schedule. This estimate is being refined as part of the current effort.

SUMMARY

Highlights of the FMITS Concept Design include safety round-table findings, advances in the mechanical design of the harness and vent-line shield block (through which FMITS utilities pass), improved remote handling procedures and tooling, and refinements of the user science envelope. Samples would be welded inside the FMITS target harness in two horizontal tubes, which project out in front of the mercury target. For these specimen locations, the back-scattering neutron flux spectra should be close to the ITER fusion spectrum. The PKA spectra at the FMITS samples were also compared to those for ITER, and the results show good agreement. Radiation damage rates would be 1.6–5.5 dpa/y for steel, with the range of helium-to-dpa production ratios starting close to those expected in D-T fusion, and increasing toward beam center locations.

PROGRESS AND STATUS

Introduction

Significant progress has been made this year to define a workable concept for design of the FMITS with well-understood impacts on the SNS operations and SNS safety case. Monthly meetings are conducted involving all aspects of the effort, and individual technical meetings for areas such as user science, instrumentation, mechanical design, remote handling, and safety are conducted as needed.

Safety

A safety round-table was held to comprehensively list and discuss any potential impacts on SNS safety due to the installation and operation of FMITS. Attendees included all safety experts, systems engineers, analysts, and design engineers. The minutes consisted of an overview of FMITS hardware and operations, explanation by the SNS Safety Officer of the scope and format of the meeting, and then an open floor discussion about potential impacts to SNS systems and safety concerns. The single issue identified during the discussion involved an indirect threat to the hydrogen moderator vessel or mercury target from a projectile emanating from a sudden burst of the FMITS (water-filled) tube annulus following a double total-flow blockage of the water. Impact to the moderator vessel was of particular concern due to the direct view of the moderator to some tube locations. Other secondary issues that needed to be addressed in the Safety Assessment were agreed as easily mitigated by standard design practices.

The safety officer proposes mitigation of projectile scenario by design, i.e. ensuring that any rupture of the FMITS tubes would occur in a direction away from the moderator vessels and target. To this end, a design of the FMITS tubes with weak spots machined into the outer surface has been proposed. Discussions are underway with Fike Inc., a company specializing in pressure relief that was contracted for a similar safety issue at the High Flux Isotope Reactor. The plan for FMITS would be to have Fike Inc. provide a design and test program for certification of the pressure relief component that is similar to the HFIR subcontract.

User Program

The purpose of FMITS is to provide a testing venue for experiments leading to advances in the fusion materials program, and the limitations on potential FMITS experiments must strike a balance between SNS operational reliability concerns with user scientific goals. Therefore, extensive investigations and discussions have led to revisions in the design parameters (Table 1) that were set in the FY2012 Design Study, and discussions are ongoing.

The 650°C irradiation limit should provide adequate range for testing of candidate steels while still in the higher reliability range for Type K thermocouples. Thermal analysis has been completed that assures the 250°C post-irradiation temperature. The limit on O_2 exposure allows for a simplified design. The lower sub-temperature dpa limit was made possible by the completion of a more comprehensive operating history study that took into account SNS beam trips and restarts.

Table 1. Important parameters on specimen irradiation conditions at planned FMITS.

Operational Parameter	FY2012 Design Study	2014 Concept Design	Future Capabilities
Maximum Irradiation Temperature	600°C	650°C	1300°C
Maximum Post-Irradiation Temperature	< Irradiation Temperature	250°C	<250°C
Maximum Temperature for O_2 Exposure	Only after removal from FMITS	250°C	<250°C
Percentage of dpa within 50°C of Target Irradiation Temperature	< 5%	< 3%	< 1%

The FMITS tubes will be water-cooled, and the loss of cooling could damage SNS equipment. TCATS (a combination of thermocouples fabricated into a common mineral insulated sheath) will be used for specimen temperature monitoring at FMITS. The temperature readings will also be important in an SNS machine protection strategy. The machine protection system is an important issue to the FMITS user science since certain failures in instrumentation could lead to premature termination of an experiment. Progress has been made in ensuring thermocouple reliability for the planned FMITS harness and in the design of an FMITS flow sensor that will

assure adequate cooling exists despite potential thermocouple failures. The thermocouple reliability case consists of:

(1) Demonstrated (100%) reliability from SNS proton beam window halo thermocouples that are exposed to similar conditions as planned FMITS thermocouples.
(2) High reliability of TCAT assemblies in experiments at the HFIR.
(3) Published thermocouple reliability numbers from nuclear reactor applications.
(4) Discussions with TCAT vendor (Delta-M) regarding their experience in nuclear applications.

A radiation-tolerant flow switch has been identified that appears to be adequate for reliable use in the FMITS water supply. The use of the flow switch with the thermocouple data should provide a means of ensuring the continued operation of FMITS despite limited thermocouple failures commensurate with previous thermocouple failure rates.

Mechanical Design

Progress in the Concept Design for the primary hardware components is presented. Three components comprise the FMITS in-cell system: the target module itself, the replaceable FMITS harness containing the material samples, and the permanent Vent Line Shield Block (VLSB) which conducts the FMITS utilities along the SNS target carriage. Although other secondary FMITS components and tooling have been improved, the progress presented is for these main components.

Modifications must be made to the target module design for FMITS implementation. Since the FY2012 Design Study was performed, SNS has adopted a new target design, referred to as the Jet-Flow Target (JFT). These new targets will be in use before the FMITS facility is incorporated, and it is expected that they will continue to be used afterwards, so modifications to the new JFT design due to FMITS have been proposed to accommodate the FMITS harness assembly.

The all-welded FMITS harness (Figure 1) provides two independent material sample sections, located above and below the SNS proton beam centerline. The distance from the centerline for each sample section can vary for each experiment. The following changes have been incorporated:

(1) The FMITS *harness flange* must provide the core vessel inflatable seal interface. The mechanical issue was the axial space required for the addition of the FMITS flange without challenging normal SNS operating functionality or remote handling maneuvers. The FMITS Concept Design now successfully integrates to the SNS JFT.

(2) Moving the mixing location for the FMITS temperature-control gases upstream into the permanent shield block on the target carriage greatly simplifies the harness. New analysis of SNS operating data shows that moving the mixing location upstream is inconsequential to the temperature control of FMITS. This change eliminated the innermost concentric tube in the harness, reducing the number of umbilical hoses.

(3) The gas-isolation valves were removed from the design, which opened up access space for remote handling. This change was made possible by the relaxation of the inert cover gas temperature (Table 1).

The VLSB (Fig. 2) is a 17-ft fabrication of solid stainless steel with internal passageways for the target and FMITS gas and electric connections. Simplifying changes to the FMITS VLSB design have reduced the number and changed the type of connectors used for FMITS gas supply. Since the gas mixing location was moved from the FMITS harness to the VLSB, the number of harness jumpers required was decreased by three (two supply jumpers and one exhaust jumper). Also, although threaded compression fittings are in the current FMITS design, quick-release connectors are more conducive to remote-handling (potential to reduce operational impacts), and technical discussions with the Staubli company are underway to make this change a reality.

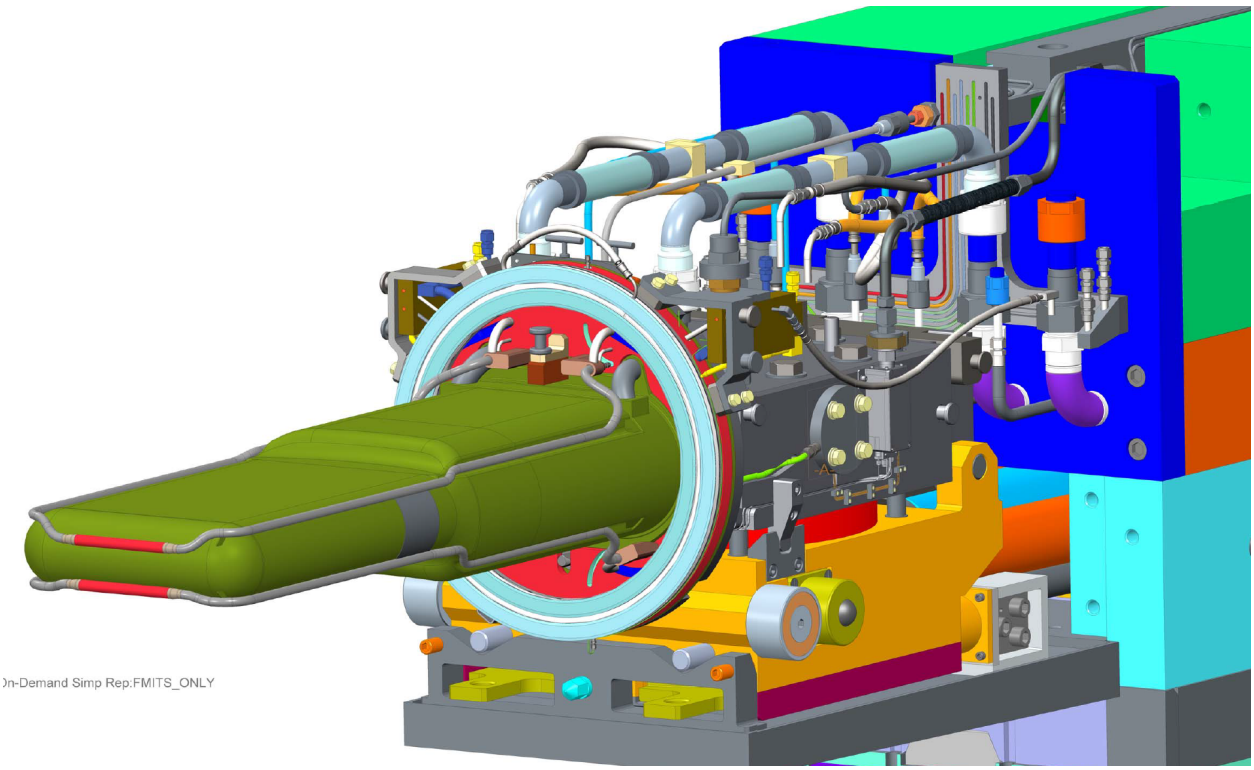

Figure 1. Current concept for FMITS harness design with sample tubes out front of the target shown in red.

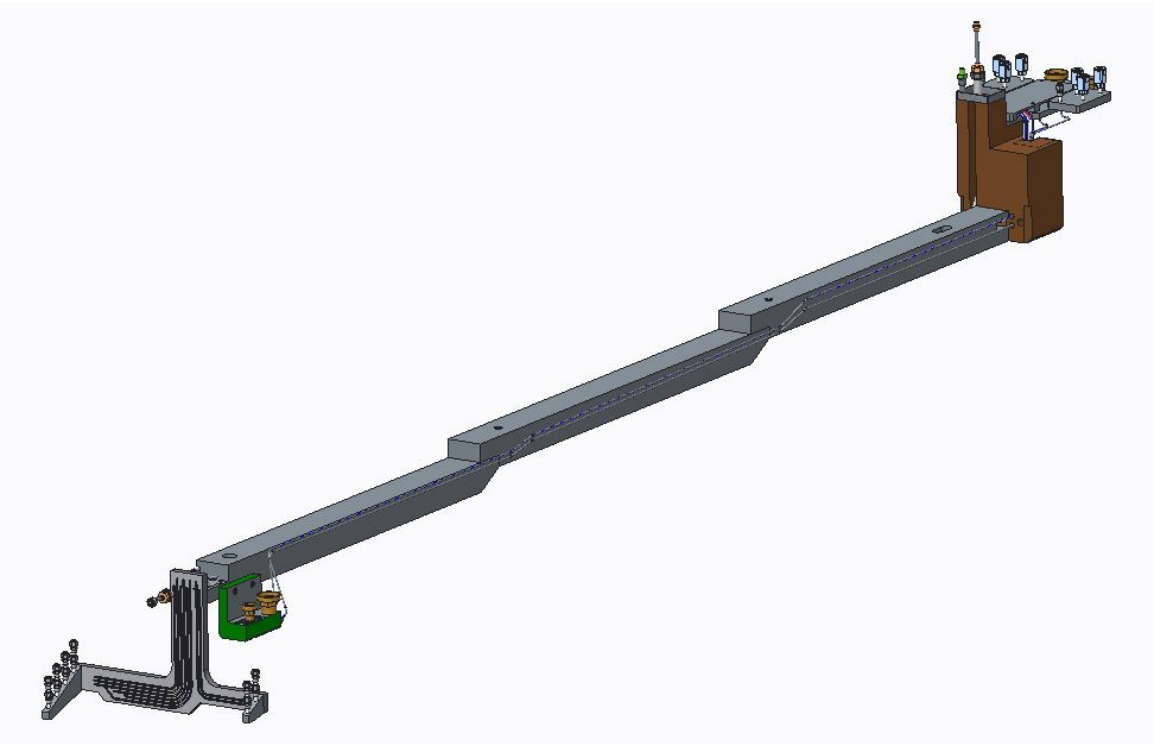

Figure 2. Current concept for FMITS VLSB design, which conducts the FMITS gas and electrical supplies alongside the pre-existing mercury, target vent-line and leak detection cabling.

Other mechanical design progress is helping to reduce operational risk at SNS. Fabrication techniques to construct the concentrically welded FMITS tubes are being developed with experienced vendors for higher reliability and decreased cost.

Remote Handling

Integration of FMITS into the existing SNS operational structure requires significant remote handling and extensive operations within the SNS Service Bay. The Service Bay is the shielded space where all target systems service operations are performed by remote handling including replacement of the target. The previous FY2012 Design Study effort provided notional concepts for operational steps in addition to the identification of new tooling and equipment required to accommodate FMITS. Continued successful SNS operation demands preservation of nominal Service Bay operational and maintenance activities. Successful integration of FMITS into nominal Service Bay operations necessitates minimal impact to existing capabilities. The goal is to re-visit these original notional solutions to ensure that a Concept Design meets all operational and technical requirements.

The present Concept Design began with a re-evaluation of all of the operational scenarios required to support FMITS operations. The objective of the operational scenarios was to define all of the FMITS-specific activities required that could impact existing SNS Service Bay operations or that were required to support FMITS operation and user program requirements. The outcome of this thorough examination resulted in a more detailed understanding of the specific processes and the tooling required supporting the processes.

Each operational scenario was then scrutinized to review the original solution envisioned in the FY2012 Design Study to ensure that the solution was viable and met the technical requirements of FMITS and the operational requirements of SNS. Based on this review, FMITS remote handling required additional scrutiny in the areas of:

- VLSB Service Bay operations,
- Service Bay Gas Line Routing, and
- FMITS-to-Target Integration.

Installation of the large FMITS Vent Line Instrument Assembly necessitated a review of all access methods to the Service Bay. The trade study resulted in the recommendation to install the new VLSB by removing selected T-beams in the roof of the Service Bay. Current efforts surround conceptual development of tooling and procedures to support this option. The radiological implications have been approved as manageable. Figure 3 shows computer modeling of the Vent Line being lowered through a T-beam opening in the High Bay.

The Gold Amalgamation Room located in the target-building basement was the location for the FMITS gas control system in the FY2012 Design Study. This location proved to have more difficult access in routing the gas lines to the FMITS harness. An improved location has been identified for the gas system in the Manipulator Gallery which is much closer and has a usable penetration and clear routing path for gas lines to the FMITS connections.

Target Imaging System

Modeling and simulation of the performance of the target imaging system (TIS) with and without the FMITS harness installed on the target was performed. The TIS system monitors the position, size and peak density of the beam relative to the target by imaging the in-beam fluorescence of a chromia coating on the nose of the target. Since the FMITS sample tubes would partially obscure the TIS view to the target nose, it is necessary to assess the impacts. The TIS does not initiate automated hardware response in the SNS control system, however, operations have become to rely upon the ability of TIS to indicate that the beam position, size and power peaking are acceptable.

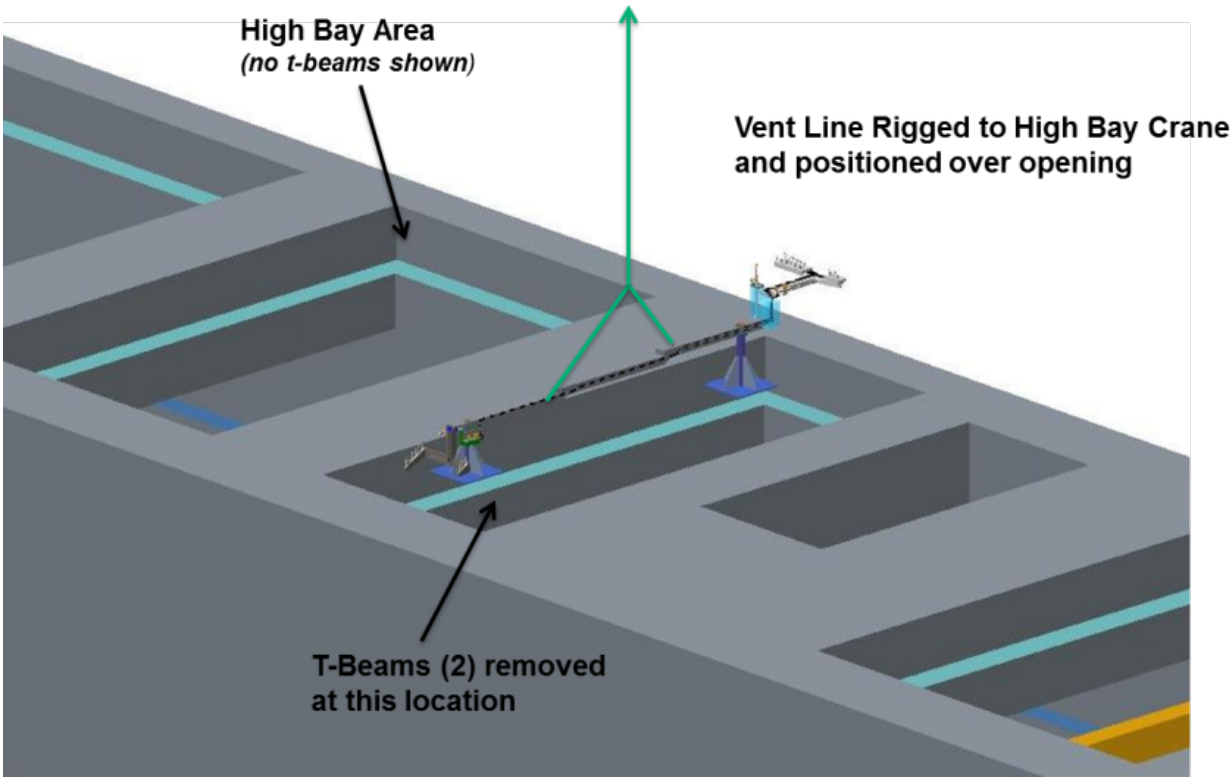

Figure 3. VLSB will be installed T-Beam opening above the target Service Bay.

An optical model of the TIS with FMITS tubes in front of the target was constructed, executed and evaluated based on historical data from October 15th, 2013 at 850 kW. The assumed positions for the tubes were 3-cm above and 5-cm below beam centerline. With this asymmetric arrangement, there was little impact (less than 1 mm in horizontal and less than 0.3 mm in vertical alignment) on the extrapolated beam alignment due to FMITS tubes according to the model, and with the centerline of the target being unobscured by FMITS, the peaking factor could accurately be determined in the model. Obscuring the centerline by positioning an FMITS tube on beam center would possibly be a problem, but the helium-to-dpa ratio is very high in the middle of the proton beam, a range of less interest to the fusion materials users.

Other considerations for potential FMITS impacts on the TIS were identified:

- Differences in luminescence and aging between the coating on the target and the coating on FMITS tubes will affect the measurement technique.
- FMITS tubes might reflect light and interfere with TIS signal, affecting resolution.
- The calibration procedure needs to change. The fiducial pattern on the target nose would have to be modified in order to be unobscured.

Additional TIS modeling will be completed before the Concept Design Review.

Some additional modeling could enhance the understanding of FMITS impacts. These include:

- Assess the effect of optical transfer (fiber pattern, blurring),
- Generate statistics by analyzing many images including those taken at the highest powers, and those collected further into the target lifetime,
- Assess near-symmetric tube distributions to quantify the degree to which symmetry affects the accuracy of the super-Gaussian fit,
- Determine the optimum fiducial pattern with FMITS tubes in place at various positions.

There is potential for mutual benefits for FMITS and SNS Operations due to the TIS which include:

- FMITS - The instantaneous dpa rate distribution would be available on the FMITS tubes, and therefore individual material specimens due to the TIS data.
- Operations - The FMITS tubes could be a testing site for optimization of luminescent coatings, thus, optimizing the performance of the TIS.
- FMITS and Operations - In the future it might be possible to use the TIS as a signal to temperature alarm since the coating luminosity has a precipitous drop-off at elevated temperatures. This signal could protect against a water shroud loss-of-flow event.

Resource-Loaded FMITS Schedule

Part of the effort of the present Concept Design is to more accurately assess the cost of completing the FMITS facility. To that end, when possible, quotations from vendors are being solicited. For example: Airgas, Inc. based on the existing FMITS process and instrumentation diagram quoted a complete gas system. The quotation came in at $200K for all of the gas system hardware. The floor footprint was acceptable for the planned installation and the cost data will be included in the revised cost estimate for the FMITS facility.

A project plan is begun in the Primavera cost planning system, and three meetings have been conducted to iterate on the structure of the project and requirements of the major phases of the FMITS build-out. Currently, manpower and materials estimates are being projected for Preliminary Design, Final Design, Procurement and Installation. Significant mock-up testing is planned mostly for the Preliminary Design phase. The FMITS-modified target module has a long lead time, so it would be separated out with an earlier design-completion date.