10.1 MINIATURE MECHANICAL TEST DEVELOPMENT FOR TUNGSTEN-BASED MATERIALS—L. M. Garrison (Oak Ridge National Laboratory), Jeremy Moon (University of Nevada-Reno), Joseph Willenborg (University of Tennessee-Knoxville)

OBJECTIVE

The aim of this work is to develop miniature mechanical test methods that can be used to evaluate neutron-irradiated tungsten and tungsten composite samples in LAMDA.

SUMMARY

Many tungsten based composites employ tungsten foils or tungsten fibers. Understanding the mechanical properties of the composite also requires understanding the mechanical properties of the constituent elements of the composite. While certain miniaturized mechanical tests, such as tensile testing SSJ size samples, is routinely accomplished in LAMDA, the requirements for testing foils and fibers is beyond the current capabilities in the laboratory. Three mechanical tests are being developed for the foils and fibers: a) shear punch test for foils, b) 3-point bend test for foils, and c) tensile test for fibers.

PROGRESS AND STATUS

Shear Punch Tests

Although a specialized clamping fixture was previously designed and fabricated for tensile testing foils, there was large scatter in the tensile data because the foils are especially sensitive to any surface defect in the gauge section and to any slight misalignment in the fixture. Shear punching is a mechanical test that is less sensitive to sample alignment or edge effects, so is well suited for the foils. Additionally, correlations can be built between the shear yield stress and the tensile yield stress. Therefore, beyond the foils, the shear punch test can be used to estimate the tensile properties of irradiated materials for which there is too small a volume available for tensile testing.

Three thicknesses of cold rolled tungsten foils and three thicknesses of grade 92 steel sheet were tested using a custom shear punch fixture with a punch diameter of 1 mm and a die diameter of 1.6 mm. The tungsten foils were 25, 100, and 250 μm thick, and the steel samples were approximately 80, 100, and 250 μm thick. Ten samples of each thickness were tested to failure at a loading rate of 0.08 mm/min.

Shear stress was calculated by Equation 1

$$\tau = \frac{F}{2\pi r t} \qquad (1)$$

where τ is the shear stress, F is the force measured by the testing frame, r is the average radius of the punch and die, and t is the thickness of the sample. The x-axis in shear punch data is often represented as the normalized displacement, δ:

$$\delta = \frac{d}{t} \qquad (2)$$

where d is the displacement of the punch and t is the sample thickness. The data is more accurate if the displacement can be measured independently by a linear variable differential transformer (LVDT), but for these tests the displacement is the cross-head displacement. To determine the shear yield strength, an offset of the normalized displacement of 0.01 was used. The uniform elongation (UE) and total elongation (TE) are calculated as the normalized displacement up to the ultimate shear strength (USS) and failure point, respectively.

Preliminary results indicate that, for the tungsten foils, only the 100 μm foil exhibited appreciable plastic deformation. The 25 μm samples failed with so little plastic extension that normal method of extracting the retained plastic deformation did not function properly. All thicknesses of the steel were ductile. Certain material thicknesses had a large spread in the data, and this is being investigated. Further analysis of the tests is ongoing.

Table 1. Summary of shear properties for tungsten and steel foils averaged over ten tests per material

	Thickness (μm)	YS (MPa)	USS (MPa)	UE (mm/mm)	TE (mm/mm)	
Steel	80	186	313	0.53	0.70	Average
		27	31	0.076	0.079	Std. deviation
	100	202	337	0.66	0.87	Average
		20	4.2	0.12	0.092	Std. deviation
	200	329	417	0.43	0.66	Average
		8	10	0.044	0.048	Std. deviation
W	25	463	471	0.025	0.043	Average
		14	16	0.016	0.025	Std. deviation
	100	456	645	0.69	1.16	Average
		26	39	0.14	0.14	Std. deviation
	250	624	646	0.025	0.028	Average
		19	17	0.011	0.011	Std. deviation

Although the shear punch test is useful for testing foils, it is not limited to this task. It has also thus far been used to test tungsten-steel composite samples and tungsten-copper sintered composite samples. Testing a variety of materials will allow a master curve between shear yield strength and tensile yield strength to be developed for the particular testing geometry used in LAMDA. Once this relation is obtained, it will be possible to estimate tensile properties of materials from shear-punch data.

Three-point Bend Tests

Rectangular-shaped 16 x 4 x 0.1 mm tungsten foils in the as-rolled and annealed condition were irradiated as part of the TITAN program. Tungsten foils from the same batch were also used to fabricate the tungsten-copper laminate composites. The behavior of the tungsten foils dominates the behavior of the tungsten-copper laminate composite, so it is necessary to understand changes in mechanical properties and microstructures of the foils during irradiation. Currently, the only mechanical test that can be used to evaluate the mechanical properties of the foils in LAMDA is microhardness, which gives only a limited understanding of the mechanical properties. The irradiated foils cannot be machined into tensile samples, so shear punch tests will be used to infer their tensile properties. Additionally, a suitable three-point bend test is being developed.

A three-point bend testing procedure based on ASTM E855, “Standard Test Methods for Bend Testing of Metallic Flat Materials for Spring Applications Involving Static Loading”, was developed to test small tungsten foil samples measuring 16 x 4 x 0.1 mm. To accommodate the unusually small size of the samples, the span of the test fixture was decreased from 15 mm specified by the standard for 100 μm thick samples, to 10 mm. This span will allow for a sufficient envelope of deflection to characterize plastic deformation in bending. Three-point bend testing was selected over four-point bend testing because it is expected that the unirradiated foils will be ductile, so a concentrated point load and maximum angle of bending is desired, a condition favoring the three-point bend test. Furthermore, simplicity of the fixture will reduce set-up time and thus worker dose for irradiated samples. A custom three-point bend fixture and load applicator was developed for the 10 mm span, with the remainder of the dimensions of the fixture and load applicator being in accordance with the ASTM standard (Figure 1). The fixture was fabricated from Inconel alloy so that it is suitable for testing irradiated and unirradiated samples at temperatures up to 1000 °C. The bend test fixture and load applicator are currently being machined and initial tests will be conducted when it is received.

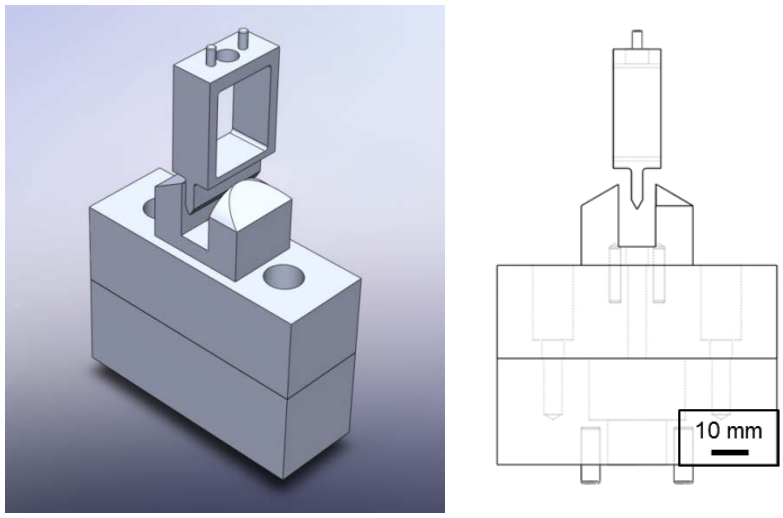

Figure 1. Design of custom three-point bend fixture for miniature tungsten foils.

Fiber Tensile Tests

Recent studies have shown that including cold worked tungsten fibers within a tungsten matrix may increase ductility and fracture toughness as compared to bulk tungsten material. Since energy dissipation in tungsten fiber-tungsten (W_f-W) composites is a purely mechanical process, additional irradiation embrittlement may not be as detrimental as for non-composite tungsten. However, understanding of W_f-W composites is limited and irradiated experiments have not been conducted. To expand the understanding of W_f-W composites, axial tensile tests of short tungsten fibers in irradiated and unirradiated conditions will be conducted. Tungsten fibers, 150 µm diameter and 36-40 mm long, are included in the PHENIX collaboration RB* 19J capsule that is currently being irradiated in HFIR.

The test methods developed here were based on the Standard Test Method for Tensile Strength and Young's Modulus of Fibers, ASTM C1557. A strain rate of 5 µm/s was chosen based on "Development of tungsten fibre-reinforced tungsten composites towards their use in DEMO—potassium doped tungsten wire" by Riesch et al. (2016) who also tested 150 µm diameter tungsten fibers. This strain rate is also in the range suggested by ASTM C1557 which recommends starting with 8 µm/s for a fiber of this length and then adjusting the rate such that the elastic region is completed within 30 s. The rate of 5 µm/s met this criteria and is thus a valid strain rate.

Two separate methods were investigated to fasten the fibers for the tensile tests. Any method used must provide enough strength for the fiber during the tensile test without putting stress concentrators on the fiber. Additionally, the method must be applicable to radioactive fibers. The first method chosen, which is suggested in ASTM C1557 was to attach each end of the 36-40 mm fiber inside a needle using Araldite A-B 5minute epoxy. The process of sample preparation included mixing epoxy in the syringe and pumping epoxy through one needle tip (Figure 2a), inserting the fiber, allowing to dry on the alignment fixture (Figure 2b), then repeating with second needle and placing in alignment fixture (Figure 2c).

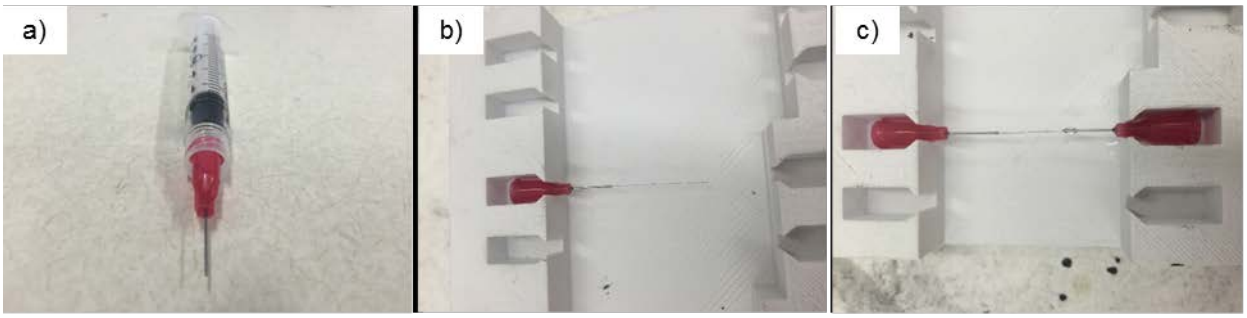

Figure 2. The procedure for preparing fibers for tensile testing. a) epoxy is pumped into a needle, b) one end of the fiber is inserted into the epoxy-filled needle and allowed to dry, c) the procedure is repeated for the other side of the fiber.

An alignment plate was designed and 3-D printed to allow for consistent production of samples that were aligned correctly and of proper length. The alignment fixture has slots for four different gauge lengths (Figure 3a). For the tensile tests, a custom fixture was also 3D printed such that the tensile force is applied to the needles which contain the fibers (Figure 3b-c).

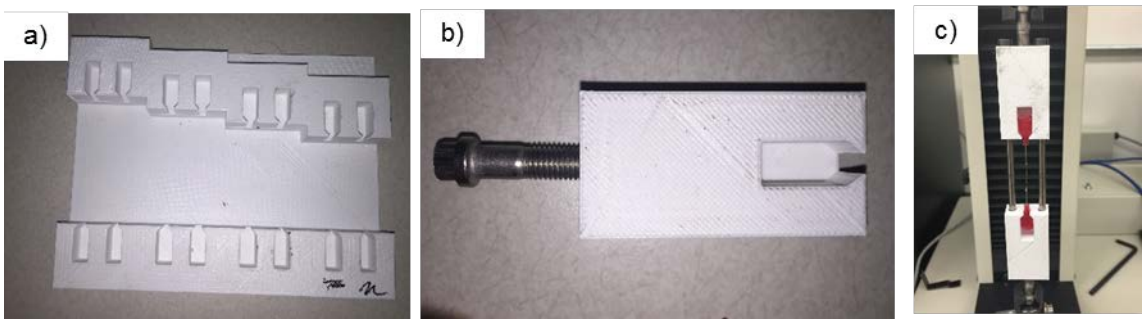

Figure 3. a) The 3D printed alignment plate b) Two brackets were 3-D printed that hold the needles in place and connect to the standard MTS tensile frame. c) W fiber in needles (red) within custom tensile fixture on tensile frame.

The advantages of this method included minimal stress, consistency in aligning the fiber, and regularity in the amount of epoxy applied to each sample. Concern about the brittleness of irradiated samples was the driving factor for selecting this method. It is assumed that the tungsten fibers will be brittle after irradiation which eliminates many methods with more direct application of force. Initial tests with the Araldite A-B 5minute epoxy proved ineffective as pullout occurred in each case after an extensive region of elastic deformation due to insufficient adhesion between the fiber and the epoxy. To combat this problem, higher Young's modulus epoxy was purchased to limit the amount of elasticity. It then became clear that the adhesive strength was the limiting factor since the fiber would slowly pull-out from the epoxy with no epoxy remaining on the fiber as determined by microscopy. As a result, a highly adhesive epoxy was then used, but was still inadequate and resulted in similar pull-out. Fiber and needle surfaces were also sanded and degreased to maximize bond strength. Unfortunately, despite many iterations of incremental improvement, it was determined that the tungsten fibers were stronger than the bond that could be formed with any of the available epoxies.

In a second method, each end of the fiber was mechanically clamped in a metal fixture (Figure 4) that had been developed at ORNL to test small SSJ shaped foil tensile samples. Although not designed for fibers, this method was attempted as a way to determine if enough force could be applied to the tungsten fibers to cause them to fail before pull-out. If successful, it would then be possible to optimize the fixture for fibers and reduce the stress concentration. To use the SSJ fixture for fibers, the fiber was placed inside

the SSJ area (Figure 5a). Then, the clamps were tightened into place (Figure 5b). In this condition, the fixture can be attached to the tensile frame (Figure 5c).

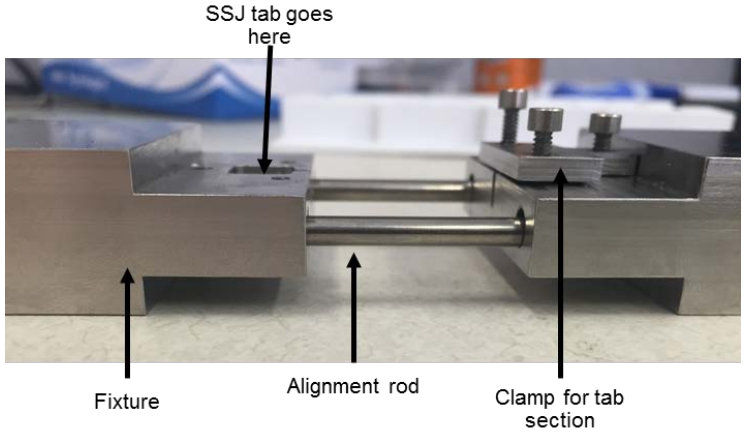

Figure 4. SSJ test fixture designed for clamping tungsten foil samples.

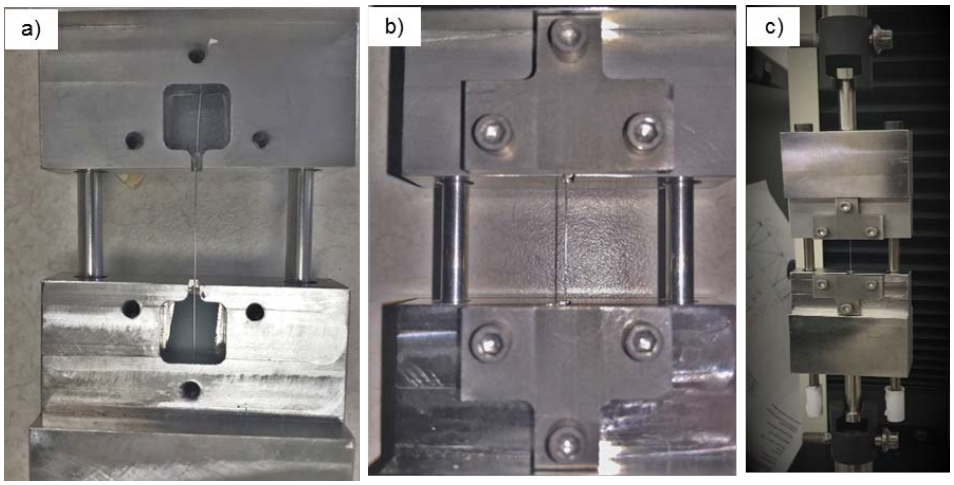

Figure 5. a) Fiber placed inside the cut-out within the fixture. b) Clamps are screwed down to hold the fiber in place. c) Fixture is placed in MTS tensile frame where tensile force is applied.

By screwing the clamp directly onto the fiber, this method was able to apply enough force to prevent the sample from pulling out of the fixture. However, some modifications of the fixture or additional material are necessary to minimize stress concentrators. So far, all trials clamped directly onto the fiber have broken near or within the clamped portion and are thus unreliable. Some improvement has been observed by inserting notecard pieces in between the fiber and fixture. However, as the tensile force is increased, at some point during testing, the fiber cuts the paper, allowing for the two metal surfaces to contact and resulting in failure. Sandpaper also shows some promise as a potential cushion layer as it does not sever like the paper does, but is also thin enough to prevent the slippage that occurred with thicker cardboard. Still, the sandpaper produces stress concentrators as one might expect and results in failure outside the gauge length. A solution to this problem may be using very fine-grit sandpaper to limit stress concentration. Combinations of sandpaper, epoxy, and paper are being experimented with to maintain proper gripping force without causing excessive stress concentrations. It is expected that the unirradiated fibers will be ductile once an acceptable method of testing is produced. Testing of irradiated samples will take place next year when the fibers return from the HFIR irradiation experiment. Conclusion of fiber testing will provide a baseline for radiation effects on tungsten fiber ductility and strength. Future

testing on W_f-W composites will further the understanding of fiber and matrix contributions individually and how they interact. This knowledge will provide the basis to engineer optimal W_f-W composites.