10.4 HFIR-MFE-RB-19J SPECIMEN LOADING LISTING—J.W. Geringer, J.L. McDuffee, C.M. Petrie, L.M. Garrison, R.H. Howard, N.O. Cetiner, D.A. Stringfield, R.G. Sitterson (Oak Ridge National Laboratory)

OBJECTIVE

This experiment is a collaborative effort between the US and Japan Fusion Materials programs to research tungsten for plasma facing components under divertor conditions and to evaluate blanket structural materials for DEMO and other fusion reactors.

The objective of this experiment is to irradiate tungsten and RAFM steel specimens at controlled temperatures of 300°C, 500°C, 800°C and 1200°C in the Removable Beryllium (RB) position of the High Flux Isotope Reactor (HFIR). The capsule has a gadolinium shield inside the capsule housing to reduce thermal neutron flux and thus reduce transmutation rates in specimen materials. The expected radiation damage levels for the steel and W specimens for the planned six cycles of HFIR operation are ~2.5 to 3 dpa and ~1.0 to 1.5 dpa respectively.

This report describes the specimens and specimen loading for the RB-19J irradiation experiment.

SUMMARY

The HFIR RB-19J irradiation experiment contains six cylindrical holders (four temperature zones) which houses ~1300 tungsten and steel specimens. The capsule and shield is design to be centered about the HFIR mid-plane, but the holders are slightly shifted toward the positive axial direction from the mid-plane. The assembly of the RB19J capsule was completed in May 2016 and installed in HFIR in June 2016. The first irradiation cycle, 466, started June 14 2016. Starting temperatures stabilized within design range for the 500°C and the 800°C holders. The 1200°C and the 300°C were lower and higher than designed by about 50°C to 100°C respectively.

Capsule Description

Internal Capsule Assembly Layout

The RB19J capsule contains six cylindrical holders located in four temperature zones 300°C, 500°C, 800°C and 1200°C as shown in Figure 1. Three of the six holders are Aluminum (6061-T6) and positioned in the lower 300°C temperature region. The Al holders contain only F82H steel alloy specimens. The other temperature regions have only one graphite holder each and contain tungsten and tungsten alloy specimens as well as smaller tungsten fiber holder assemblies.

The temperature regions are separated by three 20 mm Grade 5 titanium spacer assemblies. Each holder spacer contains a flux wire dosimetry package. The three packages 8A, 2U and 5H are located between holders 300°C & 800°C, 800°C & 1200°C and 1200°C & 500°C respectively.

The total effective internal subcapsule length is 480 mm. According to design it is slightly off center relative to the reactor axial midplane. The bottom of the 300°C holder (position 3) is 217.9 mm below the midplane while the top of the 500°C holder is 261.1 mm above the midplane position (see Figure 1).

(a)

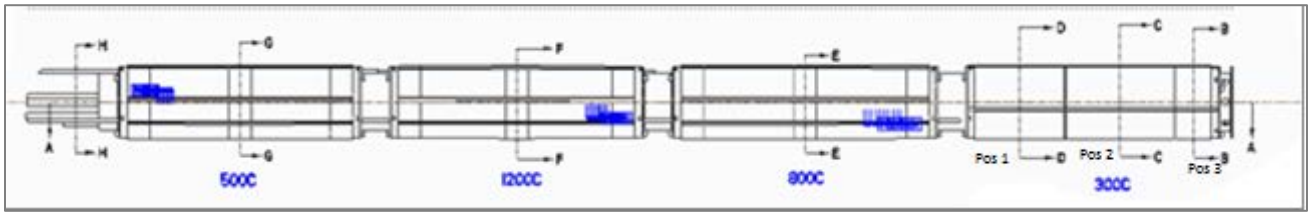

(b)

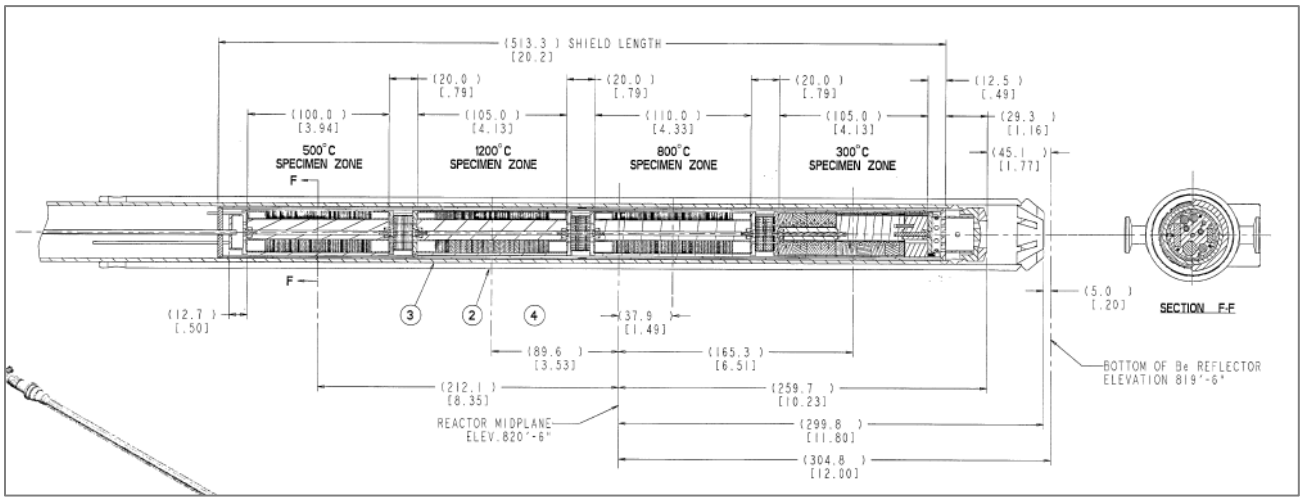

Figure 1. The layout of the RB19J Capsule Assembly – (a) Shows the internal holder positions and (b) shows the capsule dimensions in parenthesis (mm) and in brackets [inches] [D1],[D2].

The irradiation temperature control method, thermal analysis, and temperature measurement system are described in the following chapter of this progress report. The temperatures are controlled by a combination of gas gap size and gas composition. Two Type N Thermocouple Array Tubes (TCAT) inserted in the assembly with 14 junctions at different axial positions to measure temperatures. Thirteen passive SiC temperature monitors are also included in the assembly, for post irradiation determination of temperatures.

<u>Overview of the Test Matrix and Specimens</u>

The test matrix is divided according to materials types. The cooler 300°C capsule region contains only RAFM steel specimens (F82H) and aluminum specimen holders are used for higher thermal conductivity. The higher temperature capsule regions 500°C, 800°C and 1200°C, contain only tungsten and tungsten alloy specimens inside graphite holders which is more robust for higher temperatures environments with lower thermal conductivity.

Table 1 summarizes the specimen types and the quantities included in each holder. The F82H alloy specimens have specimen type codes assign to them to differentiate between the different preparation methods which includes notch preparation and pre-cracking. The specimen type code is associated with the specimen unique ID.

The tungsten specimens do not have specimen type code associated with their unique IDs. Fabrication and orientation characteristics are differentiated as part of the material code.

Table 1. Specimen Types included in the 300°C Aluminum holders

Specimen Type	Dim. [mm]	Type ID	Specimen Type Code	Quantity			
300°C Aluminum holders				**Pos 1**	**Pos 2**	**Pos 3**	**Total**
Tensile	16x4x0.75	SS-J3	6	12	18	9	39
Tensile –Notched type 3	16x4x0.75	SS-J3	7	0	18	9	28
Tensile - Notched type 2	16x4x0.75	SS-J3	5	0	6	10	16
Round bar	25x5x1.1	RB	3	4	0	0	4
Bend bar (a/W=0.2)	36x3.3x1.65	M3-PCCVN	1	0	6	0	6
Bend bar(a/W=0.5)	36x3.3x1.65	M3-PCCVN	2	12	6	0	18
Compact Tension	10x10x4	0.16CT	0	16	12	0	28
500°C, 800°C and 1200°C Graphite holders				**500°C**	**800°C**	**1200°C**	**Total**
TEM	D3 x t0.25	TEM	n/a	12	12	12	36
DISC 3mm	D3 x t0.5	D3TH	n/a	35	27	27	89
DISC 6mm	D6 x t0.25	D6TQ	n/a	26	24	26	76
DISC 6mm	D6 x t0.5	D6TH	n/a	142	148	146	436
DISC 6mm	D6 x t1	D6T1	n/a	21	21	11	53
DISC 6mm	D6xt2	D6T2	n/a	16	5	8	29
DISC 10mm	D10 x t0.25	D10TQ	n/a	15	15	0	30
DISC 10mm	D10 x t1	D10T1	n/a	10	8	8	26
DISC 10mm	D10 x t2	D10T2	n/a	2	0	2	4
Tensile	16x4x0.5	SS-J2	n/a	82	82	82	246
Toughness	10x4x2	NT2	n/a	29	29	19	77
Torsion	6x6x3	6SQ5D	n/a	6	6	6	18

Figures 2 to 10 show the geometry of all the specimens included in the assembly, with dimensions in millimeters.

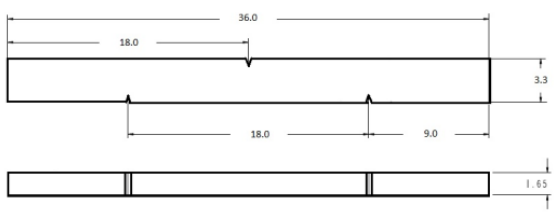

Figure 2. M3-PCCVN specimen.

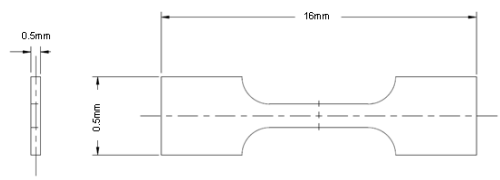

Figure 3. SSJ2 specimen.

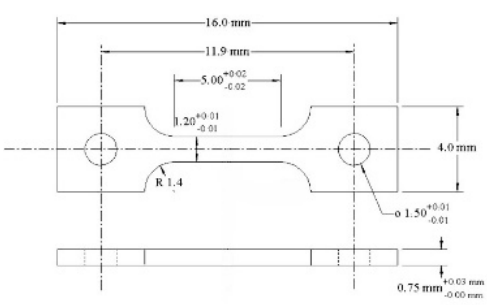

Figure 4. SSJ3 specimen without notch.

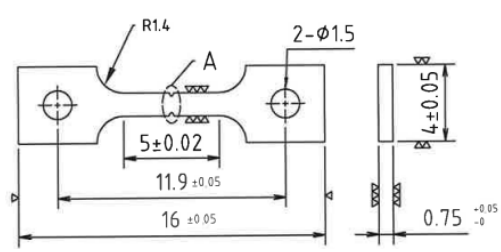

Figure 5. SSJ3 specimen with notch.

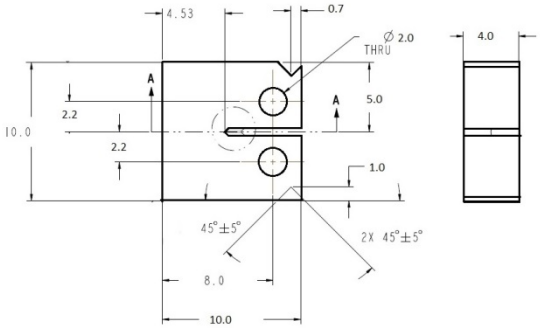

Figure 6. Compact tension (CT) specimen.

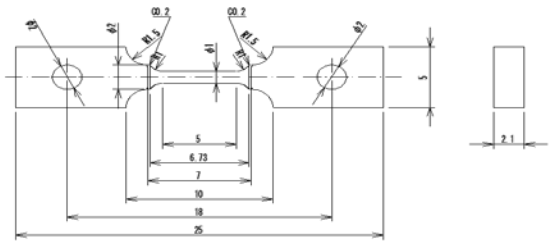

Figure 7. Round bar (RB) specimen.

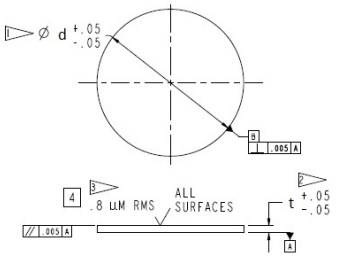

Figure 8. Disc (DdTt) specimen.

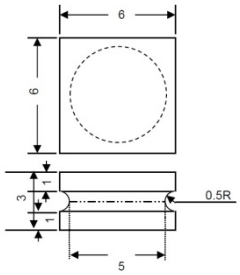

Figure 9. 6SQ5D specimen.

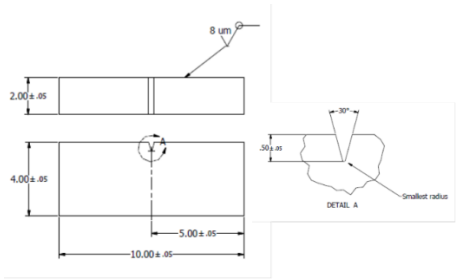

Figure 10. NT2 specimen.

Specimen Materials

The materials irradiated in this experiment are pure W, W alloys and F82H steel alloys, listed in Table 2. Each material has been given a code associated with the specimens ID number. The researchers responsible for the selected material and samples and their affiliation are also identified.

Table 2. Materials List for the RB 19J Experiment

Experimenter	Material Description	Material Code	Affiliation	Material
Buchenauer	SCW(110)	V0	US	W
Garrison	AA plate (PCW from Alfa Aeser)	FR	US	W
Garrison	AA plate tensile A (PCW from Alfa Aeser)	GE	US	W
Garrison	AA plate tensile B (PCW from Alfa Aeser)	3E	US	W
Garrison	PCW Alfa Aesar 2mm foil	EE	US	W
Garrison	PCW-0%Re (ORNL)	KE	US	W
Garrison	PCW-ITER (JP) orientation A	AT	US	W
Garrison	PCW-ITER (JP) orientation B	BT	US	W
Garrison	PCW-ITER (JP) orientation C	CT	US	W
Garrison	Rolled W foil	RE	US	W
Garrison	SCW 100 (commercial)	TE	US	W
Garrison	SCW 110 (commercial)	UE	US	W
Garrison	SCW 110 GW	GW	US	W
Garrison	SCW-100-1 tensile	HE	US	W
Garrison	SCW-100-2 tensile	JE	US	W
Garrison	W PIM	ZE	US	W
Garrison	W TiC	8E	US	W

Garrison	W-0.2%Re (ORNL)	3R	US	W
Garrison	W-3.4%Re (ORNL)	5E	US	W
Hasegawa	K-doped W (Rolled, 80%, X-direction)	60	Japan	W
Hasegawa	K-doped W-3%Re (Rolled, 80%, X-direction)	80	Japan	W
Hasegawa	K-doped W-3%Re (Rolled, 80%, X-direction, Heat treated at 1500C)	70	Japan	W
Hasegawa	Pure W (Rolled, 80%, X-direction)	P0	Japan	W
Hasegawa	Pure W (Rolled, 80%, X-direction, Heat treated at 1500C)	X0	Japan	W
Hasegawa	W-3%Re (Rolled, 80%, X-direction)	41	Japan	W
Hasegawa, Fukuda	K-doped W-Re (K-doped W-3%Re)	C0	Japan	W
Hasegawa, Fukuda	W-3Re	61	Japan	W
Hasegawa, Fukuda	W-3Re (the same as code 61)	06- -K	Japan	W
Hasegawa, Fukuda	W-3Re (the same as code 61)	06K	Japan	W
Hatano	W-5Re	71	Japan	W
Hinoki	CVD SiC/W(50um)	10	Japan	W
Hinoki	SiCf(40%)/ W(60%)	KY	Japan	W
Kasada	W(0.2mmt)-coated F82H fabricated by underwater explosive welding	11	Japan	W
Oya	Allied W	00	Japan	W
Oya	Allied W (the same as code 00)	00K	Japan	W
Oya	Allied W (the same as code 00)	10K	Japan	W
Oya	Allied W (the same as code 00)	20K	Japan	W
Oya	Allied W (the same as code 00)	30K	Japan	W
Oya	Allied W (the same as code 00)	40K	Japan	W
Oya	Allied W (the same as code 00)	50K	Japan	W
Tanigawa	F82H BA07 (8Cr-2W-0.04Ta : VIM+ESR)	SV	Japan	F82H
Tanigawa	F82H BA12 (8Cr-2W-0.08Ta : EAF+ESR)	TV	Japan	F82H
Tanigawa	F82H IEA (8Cr-2W-0.04Ta ; VIM)	0V	Japan	F82H
Ueda	ITER W (//)	40	Japan	W
Ueda	ITER W (Perpendicular)	50	Japan	W
Ueda	K-doped W-3Re (//)	90	Japan	W
Ueda	K-doped W-3Re (Perpendicular)	A0	Japan	W
Ueda	UFG-W	Y0	Japan	W
Ueda (Hinoki)	W/SiC	21	Japan	W

Not listed in the table are three types of tungsten fibers included in small fiber holders.

Type 1: W with 60 ppm K which was straightened by plastic deformation (1%) at room temperature and comes from heat lot 1151-06-13, ID 14337467 with a length of 40 mm and diameter of 150 µm.

Type 2: W with 60 ppm K which was straightened by producer at high temperature and comes from heat lot 1223-02-02, ID 22665182 with a length of 38.5 mm and diameter of 150 µm.

Type 3: W which was straightened by plastic deformation (1%) at room temperature and comes from heat lot 2618-04-14, ID 40215691 with a length of 37 mm and diameter of 150 µm.

Specimen Identification

For identification each specimen has a number assigned which consist of four or five alphanumeric characters. The specimen ID is a combined number from a few codes which have been mentioned.

The F82H steel specimens have four characters. The first two characters represent the material code, the third character represents the specimen type code and the fourth character is the specimen unique

identifier. For example, the number SV72 means the specimen material is F82H BA07, it is a notched SSJ3 type 3 specimen and its unique number is 2.

Due to the number of tungsten specimens the specimen ID has a simpler code scheme, but is still represented by four or five characters. Specimens of different specimen types may share specimen IDs with other types. The typical ID scheme is defined by four characters, the first two characters represent the material code and the next two characters represent the specimen unique identifier. For example, the number EE00 refers to the material used as PCW Alfa Aesar 2 mm foil and its unique number is 00. Specimens with five characters starting with a “06-“ and ending with “-K” is an exception. This refers to W-3Re specimens which are the same as four character specimens starting with “61-“.

If the specimen has five characters, typically the first three characters represents the material and the last two characters are the unique identifier.

The typical engraving convention is shown in Figure 11.

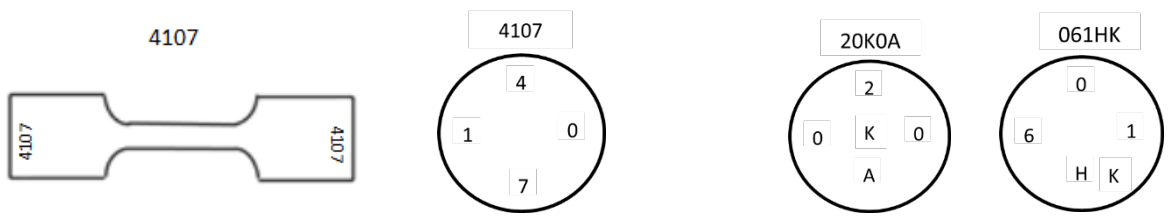

Figure 11. Specimen engraving scheme.

Holder Assemblies and Specimen Loading

<u>The Aluminum Holders (300°C)</u>

The layout of the 300°C holder assembly is shown in Figure 12. The three holder positions 1, 2 and 3 are indicated by numbers 2, 3 and 4 respectively. The holder dimensions are summarized in Table 3.

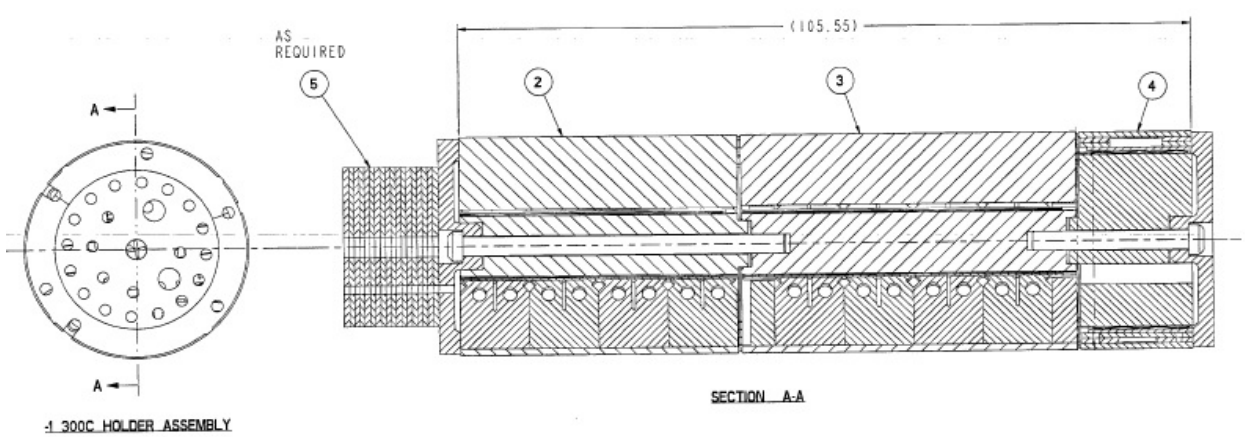

Figure 12. 300C Holders Assembly [D3].

Table 3. 300°C Holder and parts dimensions [1]

Part	Design Diameter [mm]	Design Length or Thickness [mm]
300°C holder position 1-(top & bottom)	32.33±0.025	40.0
300°C holder position 1-(top & bottom)	32.33±0.025	48.0
300°C holder position 1-(top & bottom)	32.25±0.025	16.2
Holder end caps	32.33±0.025	3.0

<u>The 300°C Position 1 Holder</u>

Figure 13 shows the holder and specimen layout of the 300°C holder position 1 and Table 4 lists the specimen loading.

SiC retainer springs provide a slight radial force to hold specimens in position and is placed next to each specimen stack. SiC temperature monitors are inserted in most of the specimen holes except for holes 6 to 9. Additional SiC temperature, C and D, are inserted in separate and dedicated holes at positions between holes 1 & 13 and holes 10 & 13 respectively (refer to no. 5 in Figure 13).

Each round bar specimen is placed in a 6061-T6 Al coffin spacer with tight tolerances around the gauge area to create a snug fit with the specimen. Graphite spacers are also used to position the specimens inside the holder. For holes 11, 12, 14 and 15 spacers with a thickness of 4.95 mm have been inserted on both the top and bottom of the specimen stack assembly. For the holes where the SS-J3 specimens are inserted, 2, 3 and 4, a 7.5mm spacer was placed only on the bottom of the specimen stack.

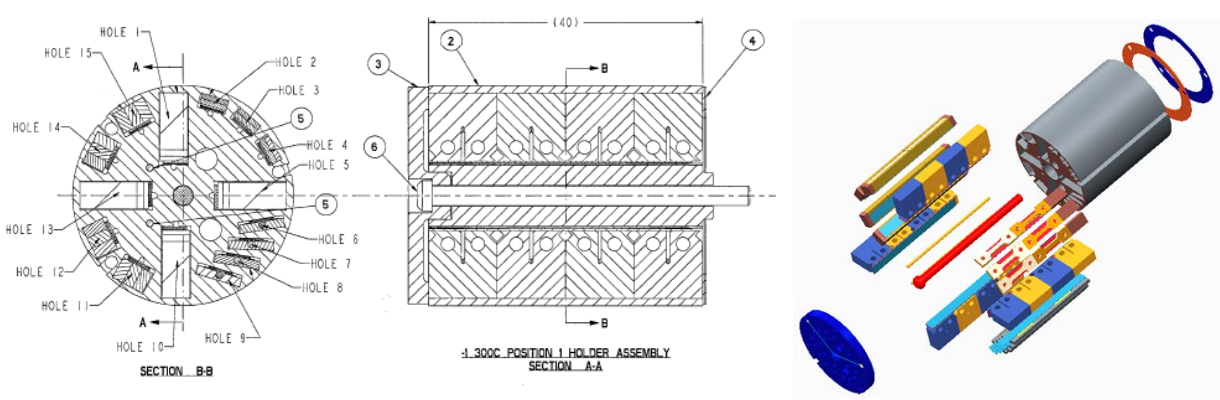

Figure 13. 300C Holders Assembly [D4].

Table 4. 300°C Holder and parts identification

Specimen Type	**0.16 CT**			
Position	**Hole 1**	**Hole 5**	**Hole 10**	**Hole 13**
Top to Bottom				
1	0V07	0V0C	SV08	SV0E
2	0V06	0V0A	SV07	SV0C
3	0V05	0V09	SV06	SV0A
4	0V04	0V08	SV05	SV09
Passive Thermometry	7-8-1	7-8-5	7-8-10	7-8-13
RETENSION SPRING	SiC	SiC	SiC	SiC
Specimen Type	**SS-J3**			
Position	**Hole 2**	**Hole 3**	**Hole 4**	
Top to Bottom				
1 (inside)	0V63	SV61	SV65	
1 (outside)	0V62	SV60	SV64	
2 (inside)	0V61	0V65	SV63	
2 (outside)	0V60	0V64	SV62	
Passive Thermometry	7-8-2	7-8-3	7-8-4	
RETENSION SPRING	SiC	SiC	SiC	
Specimen Type	**Round Bar**			
Position	**Hole 6**	**Hole 7**	**Hole 8**	**Hole 9**
1	0V30	0V31	SV30	SV31
Passive Thermometry	N/A			
Specimen Type	**M3-PCCVN**			
Position	**Hole 11**	**Hole 12**	**Hole 14**	**Hole 15**
Counter Clockwise				
1	0V26	0V29	SV26	SV29
2	0V25	0V28	SV25	SV28
3	0V24	0V27	SV24	SV27
Passive Thermometry	7-8-11	7-8-12	7-8-14	7-8-15
RETENSION SPRING	SiC	SiC	SiC	SiC

<u>The 300°C holder, position 2</u>

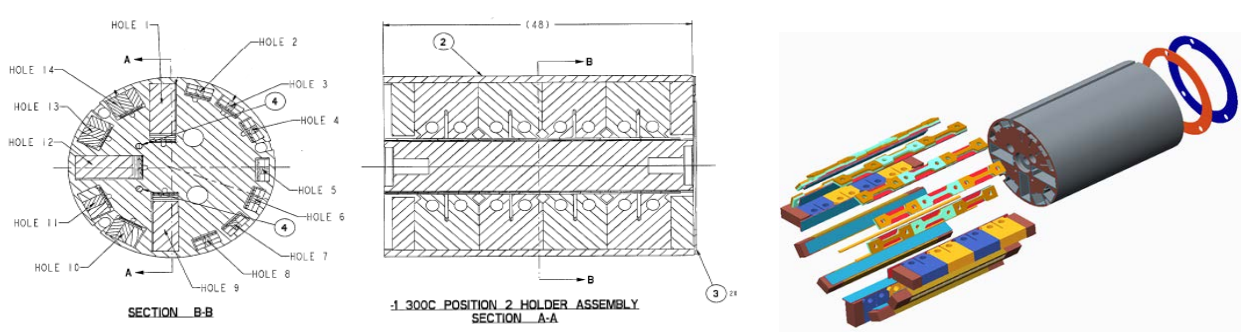

Figure 14. Specimen loading layout for the 300°C holder position 2 holder [D5].

Figure 14 shows the holder and specimen layout of the 300°C holder position 2 and Table 5 lists the specimen loading.

Similar to the previously described holder, SiC retainer springs as well as SiC temperature monitors are inserted next to each specimen stack and additional SiC temperature monitors, A and B, are inserted in separate and dedicated holes in the positions between holes 1 & 12 and holes 9 & 12 respectively (refer to 4 in Figure 14).

Graphite spacers are used to position the specimens inside the holder. For the 0.16CT specimen assemblies, spacers with a thickness of 3.5 mm have been inserted on both the top and bottom ends of the specimen stack. For the holes where the M3-PCCVN specimens are inserted, 10, 11, 13 and 14, a 5.75 mm spacer was placed on the top and bottom of the specimen stack.

Table 5. Specimen loading list for the 300°C position 2 holder

Specimen Type	**0.16 CT**						
Position	**Hole 1**	**Hole 9**	**Hole 12**				
Top to Bottom							
1	0V03	SV03	TV03				
2	0V02	SV02	TV02				
3	0V01	SV01	TV01				
4	0V00	SV00	TV00				
Passive Thermometry	9-6-15	9-6-16	9-6-12				
Retention spring	SiC	Ti	Ti				
Specimen Type	**SS-J3**						
Position	**Hole 2**	**Hole 3**	**Hole 4**	**Hole 5**	**Hole 6**	**Hole 7**	**Hole 8**
Top to Bottom							
1 (inside)	0V6C	SV6C	TV65	0V75	SV75	TV75	TV51
1 (outside)	0V6A	SV6A	TV64	0V74	SV74	TV74	TV50
2 (inside)	0V69	SV69	TV63	0V73	SV73	TV73	SV51
2 (outside)	0V68	SV68	TV62	0V72	SV72	TV72	SV50
3 (inside)	0V67	SV67	TV61	0V71	SV71	TV71	0V51
3 (outside)	0V66	SV66	TV60	0V70	SV70	TV70	0V50
Passive Thermometry	9-6-2	9-6-3	9-6-4	9-6-5	9-6-6	9-6-7	9-6-8
Retention spring	SiC	SiC	SiC	SiC	SiC	SiC	SiC
Specimen Type	**M3-PCCVN**						
Position	**Hole 10**	**Hole 11**	**Hole 13**	**Hole 14**			
Counter Clockwise							
1	0V20	SV11	TV11	TV21			
2	0V11	SV10	SV21	TV20			
3	0V10	0V21	SV20	TV12			
Passive Thermometry	9-6-10	9-6-11	9-6-13	9-6-14			
Retention spring	SiC	SiC	SiC	SiC			

The 300°C Position 3 Holder

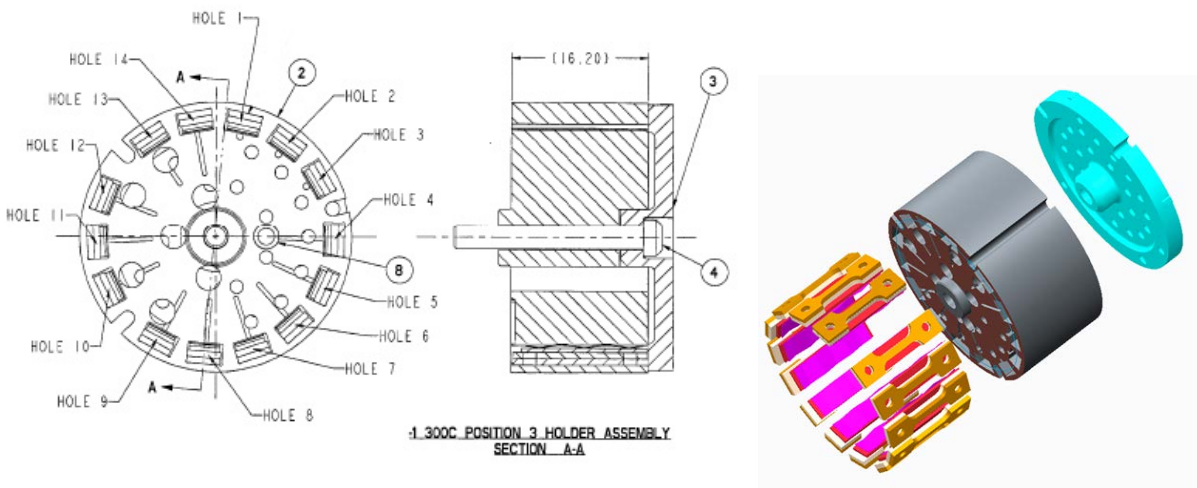

Figure15. Specimen loading layout for the 300°C holder position 3 [D6].

Figure 15 shows the holder and specimen layout of the 300°C holder position 3 and Table 6 lists the specimen loading.

Fourteen SiC temperature monitors (TMs) have been used, one placed next to each SS-J3 specimen pair on the inner radial side. The parts are kept in position with titanium retainers springs.

No temperature monitors are placed inside this holder.

Table 6. Specimen loading list for the 300°C position 3 holder

Specimen Type	**SS-J3**						
Outer to Inner	**Hole 1**	**Hole 2**	**Hole 3**	**Hole 4**	**Hole 5**	**Hole 6**	**Hole 7**
1	0V6E	0V6G	SV6F	TV66	TV68	0V77	SV76
2	0V6F	SV6E	SV6G	TV67	OV76	0V78	SV77
TM	11-6-1	11-6-2	11-6-3	11-6-4	11-6-5	11-6-6	11-6-7
Outer to Inner	**Hole 8**	**Hole 9**	**Hole 10**	**Hole 11**	**Hole 12**	**Hole 13**	**Hole 14**
1	SV78	TV77	0V52	0V54	SV52	SV54	TV53
2	TV76	TV78	0V53	0V55	SV53	SV52	TV54
TM	11-6-8	11-6-9	11-6-10	11-6-11	11-6-12	11-6-13	11-6-14

The Graphite Holder Assemblies (500°C, 800°C and 1200°C)

The graphite holder assemblies refer to the holders located in the 500°C, 800°C and 1200°C zones. There are three holders in total with varying radial as well as axial dimensions. The generic layout of each holder with specimen holes is showed in Figure 16.

(a)

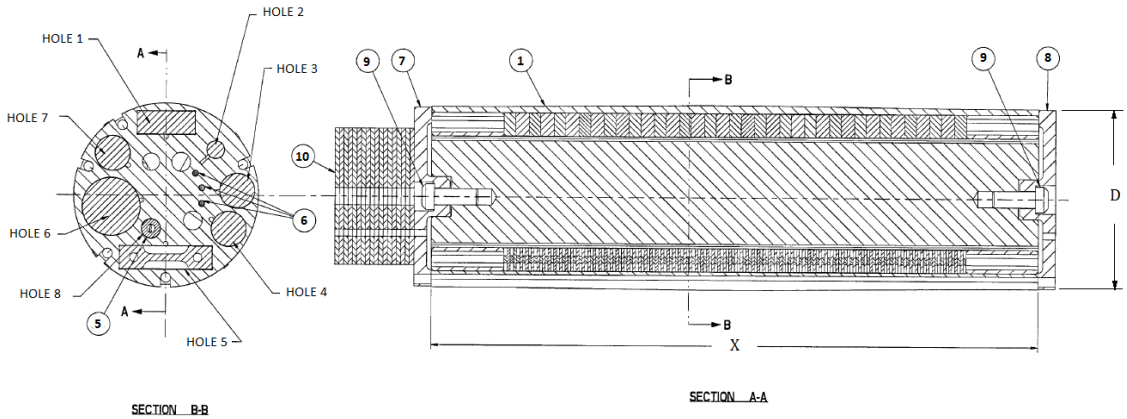

(b) (c)

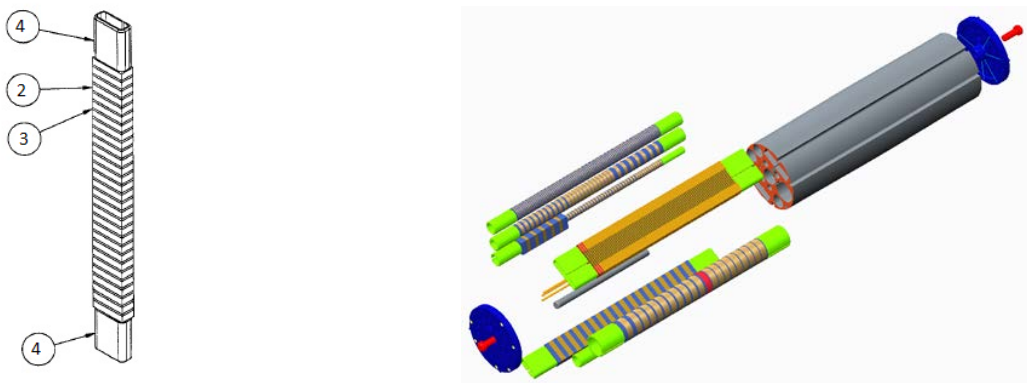

Figure 16. Specimen loading layout for a typical graphite holder (a) section drawings of the holder, (b) typical specimen stack assembly and (c) the three dimensional layout [D6].

The holders (1) have each, three design diameters for the top, middle, and bottom due to the thermal design. The dimensional ranges for the three holders are summarized in Table 7 (refer to [1], [D7], [D8], [D9] for more detail).

Table 7. Graphite holder part dimensions without tolerances

Part	Design Diameter (D) [mm]	Design Length (X) / Thickness [mm]
1200°C holder top	31.30±0.025	105.0
1200°C holder middle	32.00±0.025	105.0
1200°C holder bottom	31.20±0.025	105.0
800°C holder top	32.25±0.025	110.0
800°C holder middle	32.30±0.025	110.0
800°C holder bottom	31.90±0.025	110.0
Holder end cap tabs	32.33±0.025	3.0

Each specimen holder has seven relevant holes designed for the specimen stack assemblies. The holes from 1 to 7 are filled with NT2s, 6SQ5Ds and 3mm discs, 6mm discs, 6mm discs, SSJ2s, 10mm discs and 6mm discs respectively.

Specimens (2) are separated by graphite spacers (3) with similar shapes as the specimens but different thickness. Dimensions and quantities are given in Table 8. Each specimen assembly stack has two Ti spring pin ends (4) that keep the specimens tightly in place.

Table 8. Spacer types and thickness dimensions

Specimen Hole	Graphite spacer type	800°C		1200°C		500°C	
		Thickness on average (mm)	Quantity	Thickness on average (mm)	Quantity	Thickness on average (mm)	Quantity
1	NT2 (10mm x 4mm)	0.96	28	2.33	18	0.61	28
2	6SQ5D (6mm x 6mm)	1.5	5	1.5	5	1.5	5
	TEM	1.1	39	0.97	39	0.45	56
3	Disc 6mm dia.	1.43	36	1.43	31	0.57	41
4	Disc 6mm dia.	0.47	87	0.46	83	0.45	79
5	SSJ2 (16mm x 4mm)	0.54	81	0.48	81	0.42	81
6	Disc 10mm dia.	1.95	34	2.90	21	1.40	36
7	Disc 6mm dia.	0.74	73	0.62	74	0.39	69

The tungsten fiber holders are placed inside hole 8 (5) in all of the graphite specimen holders. The small fiber holders are ~3.3mm in diameter and ~50.0mm in length and are filled with three types of tungsten fibers as well as a SiC thermometer. There are also three SiC thermal couple inserts shown in position 6. See Figure 17 for the typical loading pattern of the tungsten fibers [2].

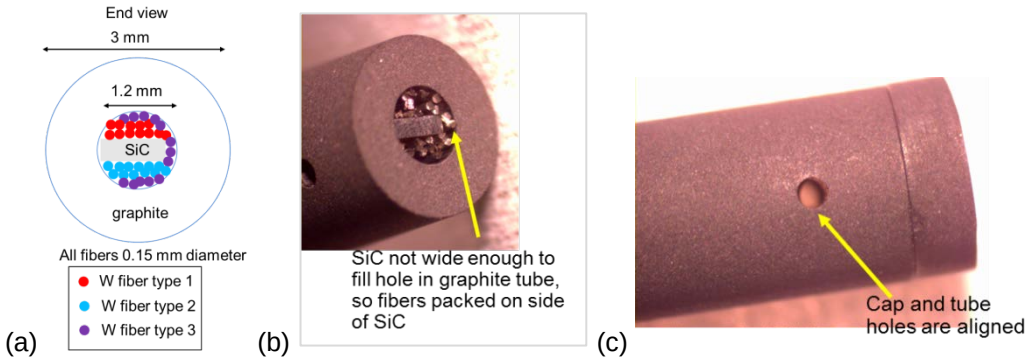

Figure 17. Tungsten fiber holder typical loading pattern: (a) approximate fiber loading location inside fiber holder, (b) photo after typical loading and (c) photo of tungsten fiber holder with cap.

The graphite holder is enclosed by a top and bottom cap, see positions 7 and 8 respectively, which is fastened with a Grade 5 Ti M2.5 Screw (9). The temperature zones, and therefore the holders, are separated by Ti holder spacers which are 13.95mm in length and filled with 18 Grafoil spacer fillers (10).

The 500°C Holder

The specimen loading list provided in Table 9 shows the specimen packing order from top to bottom of each of the seven specimen stacks in terms of the engraved ID's. It also lists the specimen types as shown in Figures 2 to 10.

The tungsten fiber holder 02 contains twelve Type 1, twelve Type 2 and thirteen Type 3 tungsten fibers and one SiC thermometry (ID: 5-6-2). Three thermal couple inserts K, L and M are inserted in the small holes near to hole 2, hole 3 and holes 3 & 4 respectively.

Table 9. Specimen loading list of the 500°C holder

Top to Bottom	Hole 1		Hole 2		Hole 3		Hole 4		Hole 5		Hole 6		Hole 7	
	ID	Type	ID	Type	ID	Type	ID	Type	ID	Type	ID	Type	ID	Type
1	KY03	NT2	9	6SQ5D	9002	D6T2	10K09	D6TH	3E04	SS-J2	8E05	D10T1	V009	D6TH
2	KY02	NT2	8	6SQ5D	9001	D6T2	10K08	D6TH	3E03	SS-J2	8E04	D10T1	V008	D6TH
3	KY01	NT2	7	6SQ5D	9000	D6T2	10K07	D6TH	3E00	SS-J2	8E03	D10T1	V007	D6TH
4	KY00	NT2	6	6SQ5D	5004	D6T2	10K06	D6TH	GE04	SS-J2	8E02	D10T1	V006	D6TH
5	FR04	NT2	3	6SQ5D	5003	D6T2	10K05	D6TH	GE03	SS-J2	8E01	D10T1	V005	D6TH
6	FR03	NT2	2	6SQ5D	5002	D6T2	10K04	D6TH	GE00	SS-J2	8E00	D10T1	V004	D6TH
7	FR02	NT2	KY00	D3TH	5001	D6T2	CT01	D6TH	EE04	SS-J2	ZE03	D10T1	V003	D6TH
8	FR01	NT2	CT03	D3TH	5000	D6T2	CT00	D6TH	EE03	SS-J2	ZE02	D10T1	V002	D6TH
9	FR00	NT2	P009	D3TH	TE0A	D6T1	BT01	D6TH	EE00	SS-J2	ZE01	D10T1	V001	D6TH
10	UE01	NT2	UE02	D3TH	TE09	D6T1	BT00	D6TH	JE04	SS-J2	ZE00	D10T1	V000	D6TH
11	UE00	NT2	4100	TEM	FR00	D6T1	710C	D6TH	JE03	SS-J2	1009	D10TH	Y004	D6TH
12	BT07	NT2	AT00	D3TH	CT0J	D6T1	7109	D6TH	JE00	SS-J2	1008	D10TH	Y003	D6TH
13	BT06	NT2	CT00	D3TH	CT0H	D6T1	7108	D6TH	HE00	SS-J2	1007	D10TH	Y002	D6TH
14	BT05	NT2	CT02	D3TH	CT0G	D6T1	7106	D6TH	UE09	SS-J2	1006	D10TH	Y001	D6TH
15	BT04	NT2	BT03	D3TH	UE01	D6TH	7105	D6TH	UE08	SS-J2	1005	D10TH	Y000	D6TH
16	BT03	NT2	P001	TEM	UE00	D6TH	7104	D6TH	UE07	SS-J2	1004	D10TH	C002	D6TH
17	BT02	NT2	800A	D3TH	KE00	D6T1	7103	D6TH	UE06	SS-J2	1003	D10TH	C001	D6TH
18	BT01	NT2	6000	TEM	3R0L	D6T1	7102	D6TH	UE05	SS-J2	1002	D10TH	C000	D6TH
19	TE01	NT2	AT02	D3TH	3R0K	D6T1	7101	D6TH	UE04	SS-J2	1001	D10TH	4107	D6TH
20	TE00	NT2	EE03	D3TH	RE03	D6TQ	7100	D6TH	UE03	SS-J2	1000	D10TH	4106	D6TH
21	CT07	NT2	EE02	D3TH	RE02	D6TQ	TE01	D6TH	UE00	SS-J2	000G	D10TQ	4105	D6TH
22	CT06	NT2	8009	D3TH	RE01	D6TQ	TE00	D6TH	CT09	SS-J2	000F	D10TQ	4104	D6TH
23	CT05	NT2	8000	TEM	RE00	D6TQ	GW09	D6T1	CT08	SS-J2	000E	D10TQ	4103	D6TH
24	CT04	NT2	X000	TEM	KY0K	D6TQ	GW01	D6T1	CT07	SS-J2	000C	D10TQ	4102	D6TH
25	CT03	NT2	BT00	D3TH	KY0V	D6TQ	5E00	D6TH	CT06	SS-J2	000A	D10TQ	4101	D6TH
26	CT02	NT2	7009	D3TH	KY0J	D6TQ	3R02	D6TH	CT05	SS-J2	0008	D10TQ	4100	D6TH
27	CT01	NT2	6001	TEM	KY0W	D6TQ	3R01	D6TH	CT04	SS-J2	0007	D10TQ	20K0H	D6TH
28	CT00	NT2	P00A	D3TH	KY08	D6TQ	3R00	D6TH	CT03	SS-J2	0006	D10TQ	20K0G	D6TH
29			TE00	D3TH	KY0X	D6TQ	AT01	D6TH	CT00	SS-J2	0005	D10TQ	20K0F	D6TH
30			1103	D3TH	50K0G	D6T1	AT00	D6TH	BT06	SS-J2	0004	D10TQ	20K0E	D6TH
31			UE00	D3TH	50K0F	D6T1	7007	D6TH	BT05	SS-J2	0003	D10TQ	20K0C	D6TH
32			AT01	D3TH	50K0E	D6T1	7006	D6TH	BT04	SS-J2	0002	D10TQ	20K0A	D6TH
33			1102	D3TH	50K0C	D6T1	7005	D6TH	BT03	SS-J2	0001	D10TQ	20K09	D6TH
34			BT02	D3TH	50K0A	D6T1	7004	D6TH	BT00	SS-J2	0000	D10TQ	20K08	D6TH
35			X00A	D3TH	50K09	D6T1	7003	D6TH	AT07	SS-J2	2101	D10T2	20K07	D6TH
36			UE01	D3TH	50K08	D6T1	7002	D6TH	AT06	SS-J2	2100	D10T2	20K06	D6TH
37			EE04	D3TH	50K07	D6T1	7001	D6TH	AT05	SS-J2			20K05	D6TH
38			8001	TEM	50K06	D6T1	7000	D6TH	AT04	SS-J2			20K04	D6TH

Top to Bottom	Hole 1		Hole 2		Hole 3		Hole 4		Hole 5		Hole 6		Hole 7	
	ID	Type	ID	Type	ID	Type	ID	Type	ID	Type	ID	Type	ID	Type
39			4101	TEM	50K05	D6T1	X007	D6TH	AT03	SS-J2			20K03	D6TH
40			X009	D3TH	00K09	D6TQ	X006	D6TH	AT00	SS-J2			20K02	D6TH
41			4109	TEM	00K08	D6TQ	X005	D6TH	X006	SS-J2			20K01	D6TH
42			6009	D3TH	00K07	D6TQ	X004	D6TH	X005	SS-J2			20K00	D6TH
43			1100	D3TH	00K06	D6TQ	X003	D6TH	X004	SS-J2			10K0Z	D6TH
44			KE00	D3TH	10K01	D6TQ	X002	D6TH	X003	SS-J2			10K0Y	D6TH
45			410A	D3TH	00K04	D6TQ	X001	D6TH	X002	SS-J2			10K0X	D6TH
46			700A	D3TH	00K03	D6TQ	X000	D6TH	X001	SS-J2			10K0W	D6TH
47			1101	D3TH	00K02	D6TQ	6007	D6TH	X000	SS-J2			10K0V	D6TH
48			X001	TEM	00K01	D6TQ	6006	D6TH	7006	SS-J2			10K0U	D6TH
49			P000	TEM	00K00	D6TQ	6005	D6TH	7005	SS-J2			10K0T	D6TH
50			EE00	D3TH			6004	D6TH	7004	SS-J2			10K0R	D6TH
51			600A	D3TH			6003	D6TH	7003	SS-J2			10K0P	D6TH
52			7000	TEM			6002	D6TH	7002	SS-J2			10K0N	D6TH
53			7001	TEM			6001	D6TH	7001	SS-J2			10K0M	D6TH
54							6000	D6TH	7000	SS-J2			10K0L	D6TH
55							8007	D6TH	6006	SS-J2			10K0K	D6TH
56							8006	D6TH	6005	SS-J2			10K0J	D6TH
57							8005	D6TH	6004	SS-J2			10K0H	D6TH
58							8004	D6TH	6003	SS-J2			10K0G	D6TH
59							8003	D6TH	6002	SS-J2			10K0F	D6TH
60							8002	D6TH	6001	SS-J2			10K0E	D6TH
61							8001	D6TH	6000	SS-J2			10K0C	D6TH
62							8000	D6TH	4106	SS-J2			10K0A	D6TH
63							P007	D6TH	4105	SS-J2			A004	D6T2
64							P006	D6TH	4104	SS-J2			A003	D6T2
65							P005	D6TH	4103	SS-J2			A002	D6T2
66							P004	D6TH	4102	SS-J2			A001	D6T2
67							P003	D6TH	4101	SS-J2			A000	D6T2
68							P002	D6TH	4100	SS-J2			4002	D6T2
69							P001	D6TH	8006	SS-J2			4001	D6T2
70							P000	D6TH	8005	SS-J2			4000	D6T2
71							06K19	D6TH	8004	SS-J2				
72							06K18	D6TH	8003	SS-J2				
73							06K17	D6TH	8002	SS-J2				
74							06K16	D6TH	8001	SS-J2				
75							06K15	D6TH	8000	SS-J2				
76							06K14	D6TH	P006	SS-J2				
77							06K13	D6TH	P005	SS-J2				
78							0612K	D6TH	P004	SS-J2				
79							06K11	D6TH	P003	SS-J2				
80							06K10	D6TH	P002	SS-J2				
81									P001	SS-J2				
82									P000	SS-J2				

The 800°C Holder

The specimen loading list provided in Table 10 shows the specimen packing order from top to bottom of each of the eight specimen stacks in terms of the engraved ID's. It also lists the specimen types as shown in Figure 16.

The tungsten fiber holder 01 contains twelve Type 1, twelve Type 2 and thirteen Type 3 tungsten fibers and on SiC thermometry (ID: 5-6-1). Three thermal couple inserts E, F and G are inserted in the small holes near to hole 2, hole 3 and holes 3 & 4 respectively.

Table 210. Specimen loading list of the 800°C holder

Top to Bottom	Hole 1		Hole 2		Hole 3		Hole 4		Hole 5		Hole 6		Hole 7	
	ID	Type	ID	Type	ID	Type	ID	Type	ID	Type	ID	Type	ID	Type
1	KY07	NT2	1-7	6SQ5D	710K	D6TH	3R05	D6TH	UE0K	SS-J2	8E07	D10T1	KY0H	D6TQ
2	KY06	NT2	1-6	6SQ5D	710M	D6TH	3R03	D6TH	UE0E	SS-J2	8E0A	D10T1	KY0M	D6TQ
3	KY05	NT2	1-4	6SQ5D	710R	D6TH	3R04	D6TH	UE0F	SS-J2	8E08	D10T1	KY0T	D6TQ
4	KY04	NT2	1-2	6SQ5D	710H	D6TH	600H	D6TH	UE0H	SS-J2	8E09	D10T1	KY0U	D6TQ
5	FR09	NT2	1-1	6SQ5D	710J	D6TH	X00H	D6TH	UE0J	SS-J2	8E0C	D10T1	KY0L	D6TQ
6	FR08	NT2	1-0	6SQ5D	710L	D6TH	5E01	D6TH	UE0A	SS-J2	000T	D10TQ	KY09	D6TQ
7	FR07	NT2	CT06	D3TH	710G	D6TH	700F	D6TH	UE0G	SS-J2	000X	D10TQ	V00K	D6TH
8	FR06	NT2	KE02	D3TH	710N	D6TH	700H	D6TH	UE0C	SS-J2	000P	D10TQ	V00M	D6TH
9	FR05	NT2	600E	D3TH	710P	D6TH	700E	D6TH	P00F	SS-J2	000R	D10TQ	V00H	D6TH
10	UE03	NT2	X002	TEM	710F	D6TH	700G	D6TH	P009	SS-J2	000N	D10TQ	V00L	D6TH
11	UE02	NT2	BT06	D3TH	FR01	D6T1	7009	D6TH	P00E	SS-J2	000V	D10TQ	V00C	D6TH
12	TE03	NT2	800C	D3TH	TE0E	D6T1	7005	D6TH	P008	SS-J2	000W	D10TQ	V00G	D6TH
13	TE02	NT2	4103	TEM	TE0C	D6T1	700A	D6TH	P007	SS-J2	000K	D10TQ	V00J	D6TH
14	CT0F	NT2	AT04	D3TH	UE03	D6TH	30K02	D6TH	P00C	SS-J2	000M	D10TQ	V00F	D6TH
15	CT0C	NT2	800E	D3TH	UE02	D6TH	30K04	D6TH	P00A	SS-J2	000V	D10TQ	V00A	D6TH
16	CT0A	NT2	410E	D3TH	A005	D6T2	30K03	D6TH	X00A	SS-J2	000Z	D10TQ	V00E	D6TH
17	CT09	NT2	6002	TEM	A006	D6T2	30K01	D6TH	X008	SS-J2	000J	D10TQ	RE05	D6TQ
18	CT0J	NT2	P003	TEM	5007	D6T2	30K00	D6TH	X007	SS-J2	000L	D10TQ	RE04	D6TQ
19	CT08	NT2	P00C	D3TH	5006	D6T2	06K1H	D6TH	X00F	SS-J2	000Y	D10TQ	30K09	D6TH
20	CT0G	NT2	P002	TEM	5005	D6T2	06K1M	D6TH	X009	SS-J2	100C	D10TH	30K0P	D6TH
21	CT0E	NT2	KY01	D3TH	KE01	D6T1	06K1J	D6TH	X00E	SS-J2	100E	D10TH	30K0W	D6TH
22	BT0H	NT2	CT05	D3TH	50K0L	D6T1	061GK	D6TH	X00C	SS-J2	100H	D10TH	30K08	D6TH
23	BT0F	NT2	X00C	D3TH	50K0U	D6T1	061CK	D6TH	JE07	SS-J2	100L	D10TH	30K0G	D6TH
24	BT0C	NT2	8003	TEM	50K0N	D6T1	061AK	D6TH	JE06	SS-J2	100A	D10TH	30K06	D6TH
25	BT0A	NT2	AT03	D3TH	50K0M	D6T1	06K1F	D6TH	JE05	SS-J2	100G	D10TH	30K0X	D6TH
26	BT0E	NT2	700C	D3TH	50K0P	D6T1	06K1L	D6TH	CT0H	SS-J2	100K	D10TH	30K0U	D6TH
27	BT0G	NT2	UE05	D3TH	50K0J	D6T1	06K1L	D6TH	CT0A	SS-J2	100M	D10TH	30K0T	D6TH
28	BT09	NT2	7003	TEM	50K0T	D6T1	06K1K	D6TH	CT0F	SS-J2	100J	D10TH	30K0A	D6TH
29	BT08	NT2	410C	D3TH	50K0H	D6T1	06K1E	D6TH	CT0E	SS-J2	100F	D10TH	30K0N	D6TH
30			6003	TEM	50K0K	D6T1	20K0N	D6TH	CT0C	SS-J2	ZE07	D10T1	30K0K	D6TH
31			X003	TEM	50K0R	D6T1	20K0K	D6TH	CT0G	SS-J2	ZE06	D10T1	30K07	D6TH
32			700E	D3TH	3R0M	D6T1	20K0T	D6TH	CT0J	SS-J2	ZE05	D10T1	30K0H	D6TH
33			600C	D3TH	3R0N	D6T1	20K0M	D6TH	CT0K	SS-J2			30K0F	D6TH
34			7002	TEM	CT0M	D6T1	20K0J	D6TH	7007	SS-J2			30K0M	D6TH
35			BT04	D3TH	CT0K	D6T1	20K0R	D6TH	700A	SS-J2			30K03	D6TH
36			UE04	D3TH	CT0L	D6T1	20K0Y	D6TH	700C	SS-J2			30K0R	D6TH
37			8002	TEM			20K0X	D6TH	700E	SS-J2			30K05	D6TH
38			CT04	D3TH			20K0U	D6TH	700F	SS-J2			30K0V	D6TH
39			UE03	D3TH			20K0W	D6TH	7008	SS-J2			30K0L	D6TH
40			X00E	D3TH			20K0L	D6TH	7009	SS-J2			30K0C	D6TH
41			P003	TEM			20K0Z	D6TH	EE07	SS-J2			00K0A	D6TQ
42			AT05	D3TH			20K0V	D6TH					00K0C	D6TQ
43			TE01	D3TH			20K0P	D6TH					00K0H	D6TQ
44			4102	TEM			TE03	D6TH					00K0K	D6TQ
45			BT05	D3TH			TE02	D6TH					00K0M	D6TQ

Top to Bottom	Hole 1		Hole 2		Hole 3		Hole 4		Hole 5		Hole 6		Hole 7	
	ID	Type	ID	Type	ID	Type	ID	Type	ID	Type	ID	Type	ID	Type
46							P00G	D6TH					00K0J	D6TQ
47							P00J	D6TH					00K0E	D6TQ
48							P00H	D6TH					00K0F	D6TQ
49							P00F	D6TH					00K0L	D6TQ
50							P008	D6TH					00K0G	D6TQ
51							P00E	D6TH					410F	D6TH
52							P009	D6TH					4108	D6TH
53							P00A	D6TH					410G	D6TH
54							P00G	D6TH					410E	D6TH
55							800C	D6TH					410C	D6TH
56							8009	D6TH					410J	D6TH
57							800A	D6TH					410H	D6TH
58							800F	D6TH					410A	D6TH
59							8008	D6TH					4109	D6TH
60							800H	D6TH					Y005	D6TH
61							800E	D6TH					Y009	D6TH
62							800G	D6TH					Y007	D6TH
63							800J	D6TH					Y008	D6TH
64							700C	D6TH					Y006	D6TH
65							7008	D6TH					C005	D6TH
66							600A	D6TH					C004	D6TH
67							600E	D6TH					C003	D6TH
68							6008	D6TH						
69							600G	D6TH						
70							6009	D6TH						
71							6006	D6TH						
72							600J	D6TH						
73							600F	D6TH						
74							X00F	D6TH						
75							X00A	D6TH						
76							X00J	D6TH						
77							X00E	D6TH						
78							X00C	D6TH						
79							X00G	D6TH						
80							X008	D6TH						
81							X009	D6TH						
82							CT02	D6TH						
83							CT03	D6TH						
84							BT03	D6TH						
85							BT02	D6TH						
86							AT03	D6TH						
87							AT02	D6TH						
88							GW03	D6T1						
89							GW02	D6T1						

The 1200°C Holder

The specimen loading list provided in Table 11 shows the specimen packing order from top to bottom of each of the seven specimen stacks in terms of the engraved ID's. The specimen types are as identified in Figure 16.

The tungsten fiber holder 03 contains twelve Type 1, 12 Type 2 and 13 Type 3 tungsten fibers and one SiC temperature monitor (ID: 5-6-3). Temperature monitors H, I and J are inserted in the small holes near hole 2, hole 3 and holes 3 & 4 respectively.

Table 11. Specimen loading list for the 1200°C holder

Top to Bottom	Hole 1		Hole 2		Hole 3		Hole 4		Hole 5		Hole 6		Hole 7	
	ID	Type	ID	Type	ID	Type	ID	Type	ID	Type	ID	Type	ID	Type
1	TE05	NT2	2-4	6SQ5D	A00A	D6T2	50K00	D6TH	3E0A	SS-J2	2104	D10T2	410W	D6TH
2	TE04	NT2	2-3	6SQ5D	A009	D6T2	40K05	D6TH	3E09	SS-J2	2103	D10T2	410V	D6TH
3	UE05	NT2	2-2	6SQ5D	A008	D6T2	40K04	D6TH	3E08	SS-J2	8E0K	D10T1	410U	D6TH
4	UE04	NT2	2-0	6SQ5D	A007	D6T2	40K03	D6TH	GE01	SS-J2	8E0J	D10T1	410T	D6TH
5	CT0T	NT2	1-9	6SQ5D	500C	D6T2	40K02	D6TH	GE09	SS-J2	8E0H	D10T1	410R	D6TH
6	CT0R	NT2	1-8	6SQ5D	500A	D6T2	40K01	D6TH	GE08	SS-J2	8E0G	D10T1	410P	D6TH
7	CT0P	NT2	P004	TEM	5009	D6T2	40K00	D6TH	EE01	SS-J2	8E0F	D10T1	410N	D6TH
8	CT0N	NT2	P005	TEM	5008	D6T2	30K0Y	D6TH	EE09	SS-J2	ZE09	D10T1	410M	D6TH
9	CT0M	NT2	6004	TEM	FR02	D6T1	CT07	D6TH	EE08	SS-J2	ZE08	D10T1	410L	D6TH
10	CT0L	NT2	X004	TEM	CT0R	D6T1	CT06	D6TH	JE0A	SS-J2	ZE07	D10T1	410K	D6TH
11	CT0K	NT2	X005	TEM	CT0P	D6T1	CT05	D6TH	JE09	SS-J2	100Z	D10TH	C008	D6TH
12	BT0M	NT2	8004	TEM	CT0N	D6T1	CT04	D6TH	JE08	SS-J2	100Y	D10TH	C007	D6TH
13	BT0L	NT2	8005	TEM	TE0G	D6T1	BT05	D6TH	HE04	SS-J2	100X	D10TH	C006	D6TH
14	BT0K	NT2	6006	TEM	TE0F	D6T1	BT04	D6TH	UE0V	SS-J2	100W	D10TH	V00V	D6TH
15	BT0J	NT2	4104	TEM	UE05	D6TH	TE05	D6TH	UE0U	SS-J2	100V	D10TH	V00U	D6TH
16	KY0C	NT2	4105	TEM	UE06	D6TH	TE04	D6TH	UE0T	SS-J2	100U	D10TH	V00Z	D6TH
17	KY0A	NT2	7004	TEM	3R0R	D6T1	GW05	D6T1	UE0R	SS-J2	100T	D10TH	V00Y	D6TH
18	KY09	NT2	7005	TEM	3R0P	D6T1	GW04	D6T1	UE0P	SS-J2	100R	D10TH	V00X	D6TH
19	KY0E	NT2	KY02	D3TH	KE02	D6T1	5E02	D6TH	UE0N	SS-J2	100P	D10TH	V00W	D6TH
20			P00F	D3TH	00K0Z	D6TQ	3R08	D6TH	UE0M	SS-J2	100N	D10TH	V00T	D6TH
21			P00G	D3TH	00K0Y	D6TQ	3R07	D6TH	UE0L	SS-J2			V00R	D6TH
22			800F	D3TH	00K0X	D6TQ	3R06	D6TH	CT0V	SS-J2			V00P	D6TH
23			800G	D3TH	RE09	D6TQ	AT05	D6TH	CT0U	SS-J2			Y00G	D6TH
24			410F	D3TH	RE08	D6TQ	AT04	D6TH	CT0T	SS-J2			Y00F	D6TH
25			410G	D3TH	RE07	D6TQ	700W	D6TH	CT0R	SS-J2			Y00E	D6TH
26			600F	D3TH	RE06	D6TQ	700V	D6TH	CT0P	SS-J2			Y00C	D6TH
27			600G	D3TH	KY0F	D6TQ	700U	D6TH	CT0N	SS-J2			Y00A	D6TH
28			X00F	D3TH	KY0E	D6TQ	700T	D6TH	CT0M	SS-J2			40K0Z	D6TH
29			X00G	D3TH	KY0A	D6TQ	700R	D6TH	CT0L	SS-J2			40K0Y	D6TH
30			700F	D3TH	KY0G	D6TQ	700P	D6TH	BT0J	SS-J2			40K0X	D6TH
31			700G	D3TH	KY0XX	D6TQ	700N	D6TH	BT0H	SS-J2			40K0W	D6TH
32			AT06	D3TH	KY0P	D6TQ	700M	D6TH	BT0G	SS-J2			40K0V	D6TH
33			AT07	D3TH			700L	D6TH	BT0F	SS-J2			40K0U	D6TH
34			AT08	D3TH			700K	D6TH	X00J	SS-J2			40K0T	D6TH
35			KE03	D3TH			X00W	D6TH	BT0E	SS-J2			40K0R	D6TH
36			UE06	D3TH			X00V	D6TH	AT0M	SS-J2			40K0P	D6TH
37			UE07	D3TH			X00U	D6TH	AT0L	SS-J2			40K0N	D6TH
38			UE08	D3TH			X00T	D6TH	AT0K	SS-J2			40K0N	D6TH
39			TE02	D3TH			X00R	D6TH	AT0J	SS-J2			40K0M	D6TH
40			BT07	D3TH			X00P	D6TH	AT0H	SS-J2			40K0L	D6TH
41			BT08	D3TH			X00N	D6TH	AT0G	SS-J2			40K0K	D6TH
42			BT09	D3TH			X00M	D6TH	X00N	SS-J2			40K0J	D6TH
43			CT07	D3TH			X00L	D6TH	X00M	SS-J2			40K0H	D6TH
44			CT08	D3TH			X00K	D6TH	X00L	SS-J2			40K0G	D6TH
45			CT09	D3TH			600W	D6TH	X00K	SS-J2			40K0F	D6TH

Top to Bottom	Hole 1		Hole 2		Hole 3		Hole 4		Hole 5		Hole 6		Hole 7	
	ID	Type	ID	Type	ID	Type	ID	Type	ID	Type	ID	Type	ID	Type
46							600V	D6TH	X00H	SS-J2			40K0E	D6TH
47							600U	D6TH	X00G	SS-J2			40K0C	D6TH
48							600T	D6TH	700N	SS-J2			40K0A	D6TH
49							600R	D6TH	700M	SS-J2			40K09	D6TH
50							600P	D6TH	700L	SS-J2			40K08	D6TH
51							600N	D6TH	700K	SS-J2			40K07	D6TH
52							600M	D6TH	700J	SS-J2			40K06	D6TH
53							600L	D6TH	700H	SS-J2			7117	D6TH
54							600K	D6TH	700G	SS-J2			7114	D6TH
55							800W	D6TH	600N	SS-J2			7113	D6TH
56							800V	D6TH	600M	SS-J2			7112	D6TH
57							800U	D6TH	600L	SS-J2			7111	D6TH
58							800T	D6TH	600K	SS-J2			7110	D6TH
59							800R	D6TH	600J	SS-J2			710Z	D6TH
60							800P	D6TH	600H	SS-J2			710Y	D6TH
61							800N	D6TH	600G	SS-J2			710X	D6TH
62							800M	D6TH	410N	SS-J2			710W	D6TH
63							800L	D6TH	410M	SS-J2			00K0W	D6TQ
64							800K	D6TH	410L	SS-J2			00K0V	D6TQ
65							P00W	D6TH	410K	SS-J2			00K0U	D6TQ
66							P00V	D6TH	410J	SS-J2			00K0T	D6TQ
67							P00U	D6TH	410H	SS-J2			00K0R	D6TQ
68							P00T	D6TH	410G	SS-J2			00K0P	D6TQ
69							P00R	D6TH	800N	SS-J2			00K0N	D6TQ
70							P00P	D6TH	800M	SS-J2				
71							P00N	D6TH	800L	SS-J2				
72							P00M	D6TH	800K	SS-J2				
73							P00L	D6TH	800J	SS-J2				
74							P00K	D6TH	800H	SS-J2				
75							16K10	D6TH	800G	SS-J2				
76							06K1Z	D6TH	P00N	SS-J2				
77							061YK	D6TH	P00M	SS-J2				
78							06K1X	D6TH	P00L	SS-J2				
79							06K1W	D6TH	P00K	SS-J2				
80							06K1V	D6TH	P00J	SS-J2				
81							061UK	D6TH	P00H	SS-J2				
82							061TK	D6TH	P00G	SS-J2				
83							061RK	D6TH						
84							061PK	D6TH						

Conclusion

HFIR MFE-RB-19J is a complex irradiation experiment with ~1300 specimens of F82H, W and W alloy specimens. The experiment is planned for six cycle irradiation in HFIR. The experiment uses a Gd thermal neutron shield, and the expected displacement damage for F82H and W during the 6 cycles will be ~2.5 to 3 and ~1.0 to 1.5 dpa respectively.

References

[1] McDuffee, J.L., Temperature Verification, Transient Analysis, and Argon Activation for Materials Experiment MFE-RB-19J, C-HFIR-2016-007, Rev. 0, Reactor and Nuclear Systems Division, Oak Ridge National Laboratory, 2016.

[2] Garrison, J.L., "Fiber assembly in the graphite tubes for RB*19J", March 9th 2016.

Drawings:

[D1] HFIR MFE 19J Experiment Capsule Assembly, X3E020977A663, Rev. 0, Reactor and Nuclear Systems Division, Oak Ridge National Laboratory, 2016.

[D2] HFIR 19J Experiment Specimen Holders Assembly, S15-61-RB1901, Rev. 1, Reactor and Nuclear Systems Division, Oak Ridge National Laboratory, 2016.

[D3] HFIR MFE 19J Experiment 300C Holders, S15-34-RB19J06, Rev. 0, Reactor and Nuclear Systems Division, Oak Ridge National Laboratory, 2016.

[D4] RB19J Experiment 300C Position 1 Holder Assembly, S15-35-RB19J07, Rev. 0, Reactor and Nuclear Systems Division, Oak Ridge National Laboratory, 2016.

[D5] RB19J Experiment 300C Position 2 Holder Assembly, S15-37-RB19J09, Rev. 0, Reactor and Nuclear Systems Division, Oak Ridge National Laboratory, 2016.

[D6] RB19J Experiment 300C Position 3 Holder Assembly, S15-39-RB19J11, Rev. 0, Reactor and Nuclear Systems Division, Oak Ridge National Laboratory, 2016.

[D7] RB19J Experiment 800C Holder Assembly, S15-46-RB19J17, Rev. 0, Reactor and Nuclear Systems Division, Oak Ridge National Laboratory, 2016.

[D8] RB19J Experiment 1200C Holder Assembly, S15-50-RB19J19, Rev. 0, Reactor and Nuclear Systems Division, Oak Ridge National Laboratory, 2016.

[D9] RB19J Experiment 500C Holder Assembly & Details, S15-55-RB19J23, Rev. 0, Reactor and Nuclear Systems Division, Oak Ridge National Laboratory, 2016.