ASSEMBLY OF THE US-JAPAN JP-26 EXPERIMENT AND START OF IRRADIATION IN THE HFIR—

K. R. Thoms, D. W. Heatherly, S. H. Kim, R. G. Sitterson, R. E. Stoller (Oak Ridge National Laboratory), and H. Tanigawa (Japan Atomic Energy Research Institute, Tokai, Japan)

OBJECTIVE

This work is being carried out under Annex I of the Collaboration on Fusion Materials between the US DOE and the Japan Atomic Energy Research Institute. The JP-26 experiment is one component of the Phase-IV experiments with the goal of elucidating the effects of helium in candidate engineering and model alloys, and verifying the irradiation response of alloy F82H.

SUMMARY

Specimen and capsule parts fabrication for JP-26 was completed. Loading of specimens into specimen holders and assembly of the capsule was completed. The experiment was installed in the target region of HFIR and irradiation began with cycle 398, starting December 11, 2003.

PROGRESS AND STATUS

Introduction

This experiment is being carried out within the framework of the US DOE-JAERI Collaboration on Fusion Materials, Annex I, which is in its fourth phase. The goals of the experiment include the investigation of the effects of helium on microstructural evolution, the impact of helium on fracture properties, and the development of engineering data on the fusion candidate alloy F82H. The specimen matrix for JP-26 has been reported earlier [1]. The goal of this report is to provide a detailed description of the final design of the JP-26 capsule and a detailed list of specimens loaded into JP-26.

Description of JP-26 Capsule

The JP-26 capsule includes 17 specimen holders designed to accommodate 6 types of specimens and irradiate them at 3 temperatures, 300, 400, and 500°C. The specimen types are a small bend bar (deformation-fracture mini-beam, DFMB), a sheet tensile specimen (SS-J3), a subsized pre-cracked Charpy V-notch specimen (0.5-1/3-PCCVN), transmission electron microscopy disks (TEM), atom probe specimens (APFIM), and small multi-purpose coupons (MMPC) that have the same overall dimensions as the APFIM specimens.

An overall layout of the JP-26 experiment is shown in Figure 1, which provides the subcapsule position number, the specimen type being irradiated in that position, the design irradiation temperature, and the distance that the center of the subcapsule is from the HFIR horizontal mid-plane (HMP). Also shown in Figure 1 is the location of neutron dosimeter packages.

Each of the specimen holders is fabricated from oxide dispersion strengthened aluminum (DISPAL). The outside diameters of the specimen holders are sized to provide a precise helium-filled gas gap between the holder and the capsule housing tube necessary to achieve the desired irradiation temperature. Centering tabs, six at each end, are machined into the holders to help assure uniform gas gaps. The inner part of the specimen holder is machined to accommodate the type of specimens being irradiated, and therefore each has a unique geometry. Silicon carbide (SiC) passive temperature monitors are included in each specimen holder. These will be analyzed after irradiation to determine actual irradiation temperature.

A top view and axial cross section of the specimen holders used to irradiate TEM specimens (positions 1, 10, and 17) is shown in Figure 2 (all dimensions in Figures 2 through 5 are in inches). A total of 100

(0.010 in. thick) specimens can be accommodated in these holders along with a single SiC temperature monitor located at the center of the holder. To help identify in which hole the specimens are located a 0.040-in. diameter by 0.040-in. deep hole was drilled in the top of each TEM holder, and the specimen holes are then numbered clockwise starting at this 0.040-in. hole.

The loading configuration for the tensile specimen holders is shown in Figure 3. For a given elevation eight SS-J3 tensile and eight APFIM specimens can be accommodated. Four holders (positions 2, 9, 13, and 16) have one layer of specimens with this configuration, while six holders (positions 3, 5, 6, 7, 11, and 15) have two layers, or 16 tensile and APFIM specimens. A spring pin is placed in the center of the specimen array to apply pressure to the SiC temperature monitors and, in turn, on the tensile specimens to assure good thermal contact with the specimen holder. At each corner two APFIM "tuning fork" specimens are loaded with a corrugated spring to assure that they are also in good thermal contact with the holder. In some of the tensile specimen holders two multi-purpose coupons (MMPC) and spacers that combined have the same overall dimensions as the APFIM specimens were substituted for the APFIM specimens (see loading list).

Subsized pre-cracked Charpy V-notch specimens (0.5-1/3-PCCVN) are loaded into specimen holders shown in Figure 4. Each of these holders (positions 4, 8, and 12) have two layers of specimens for a total of 16 specimens per holder. Two SiC temperature monitors and corrugated springs are placed in the center of the specimen array to assure good thermal contact with the holder.

The DFMB specimens are loaded into one holder (position 14) as shown in Figure 5. There are four layers of specimens with 16 specimens at each level. The outer row of each layer is made up of 12 specimens that are 1.68 mm square, while the inner four specimens are 1.68 x 1.45 mm. A SiC temperature monitor and a corrugated spring are placed in the center of the specimen array, and two corrugated springs are placed in two of the outer rows to assure all specimens are in good thermal contact with the holder. Specimen locations are designated by a C, S, TM, or M, to more precisely identify loading locations (see loading list).

Specimen Loading

The location of each of the nearly 700 specimens in JP-26 is reported in Table 1, which contains a box for each of the 17 specimen holder and 5 dosimeter positions. Because coatings applied to some of the TEM discs required the discs to be loaded in a prescribed manner, the boxes for the TEM specimen holders (positions 1, 10, and 17) have a column labeled "Engr. Face" to indicate which way the engraved face of the specimen was loaded. A total of five neutron dosimeter packages provided by PNNL were loaded into JP-26, one each between positions 1 and 2, 5 and 6, 8 and 9, 13 and 14, and below position 17. The 0.5-1/3-PCCVN specimens (in positions 4, 8 and 12) were all loaded with the notches facing towards the center of the holders. The outer rows of specimens in the DFMB holder (position 14) were loaded with the notches facing outward toward the holder, while the inner four specimens were loaded with their notches facing inward toward the center of the holder.

Future Work

The JP-26 capsule will be irradiated to a peak fluence of 8-10 dpa, which will take approximately 5 HFIR cycles.

References

[1] R. E. Stoller and H. Tanigawa, Fusion Materials Semi-annual Progress Report DOE/ER/0313/34, (June 2003) 142.

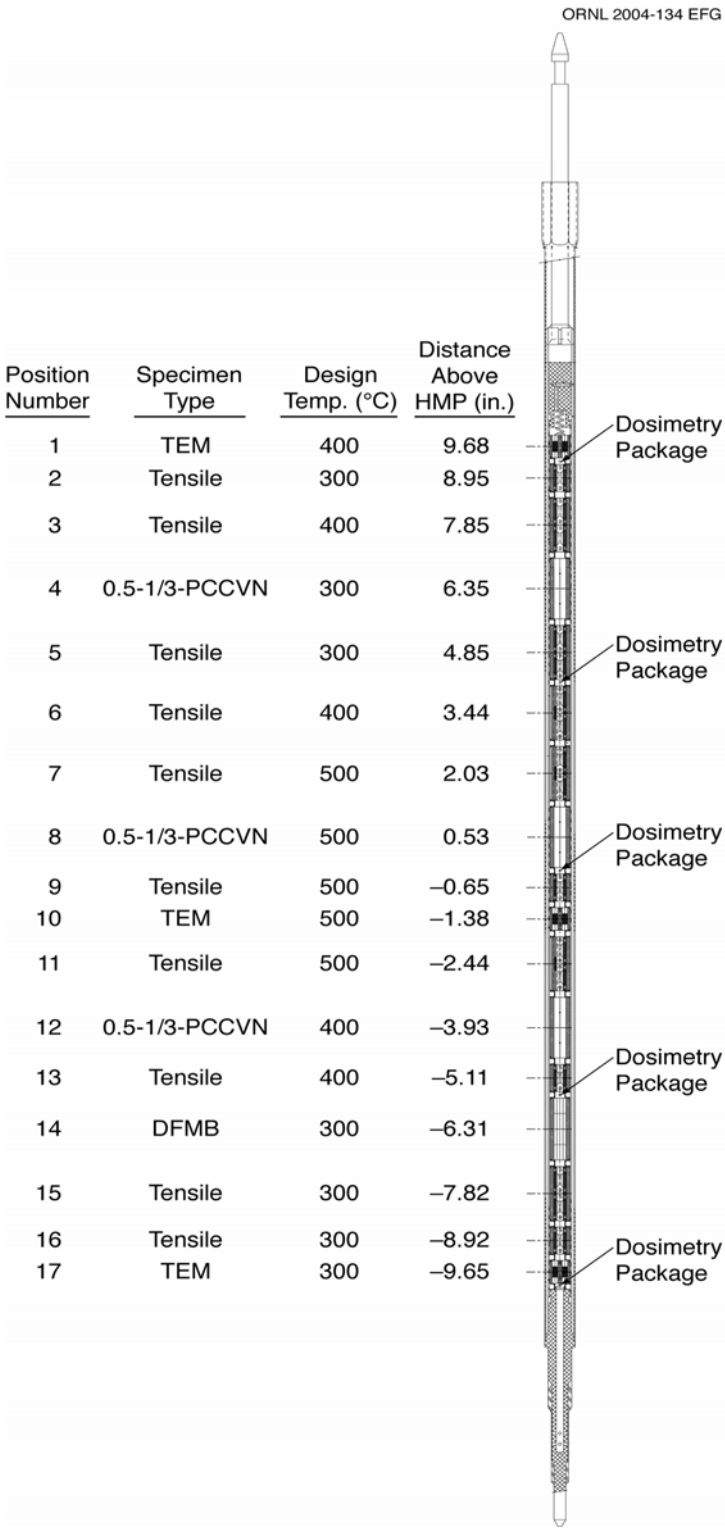

Position Number	Specimen Type	Design Temp. (°C)	Distance Above HMP (in.)
1	TEM	400	9.68
2	Tensile	300	8.95
3	Tensile	400	7.85
4	0.5-1/3-PCCVN	300	6.35
5	Tensile	300	4.85
6	Tensile	400	3.44
7	Tensile	500	2.03
8	0.5-1/3-PCCVN	500	0.53
9	Tensile	500	–0.65
10	TEM	500	–1.38
11	Tensile	500	–2.44
12	0.5-1/3-PCCVN	400	–3.93
13	Tensile	400	–5.11
14	DFMB	300	–6.31
15	Tensile	300	–7.82
16	Tensile	300	–8.92
17	TEM	300	–9.65

Figure 1. Overall layout of JP26 experiment.

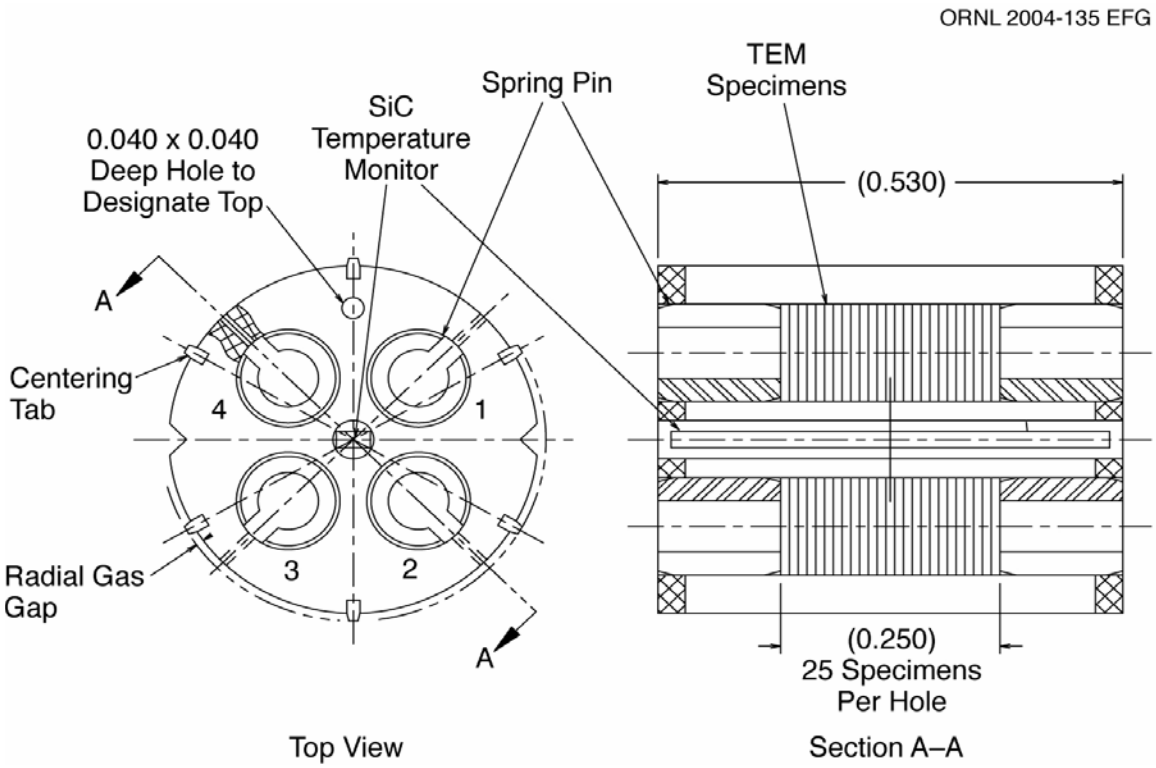

Figure 2. Specimen holder subassembly used in JP-26 for TEM specimens.

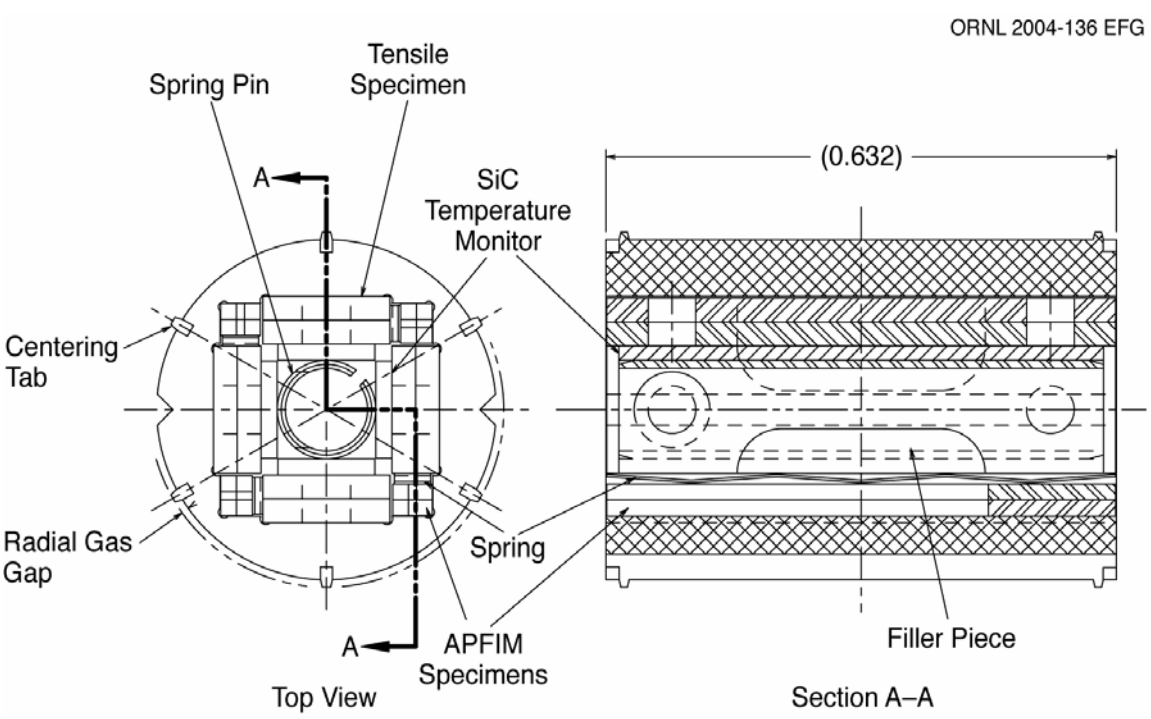

Figure 3. Specimen holder subassembly used in JP-26 for SS-J3 tensile and APFIM specimens.

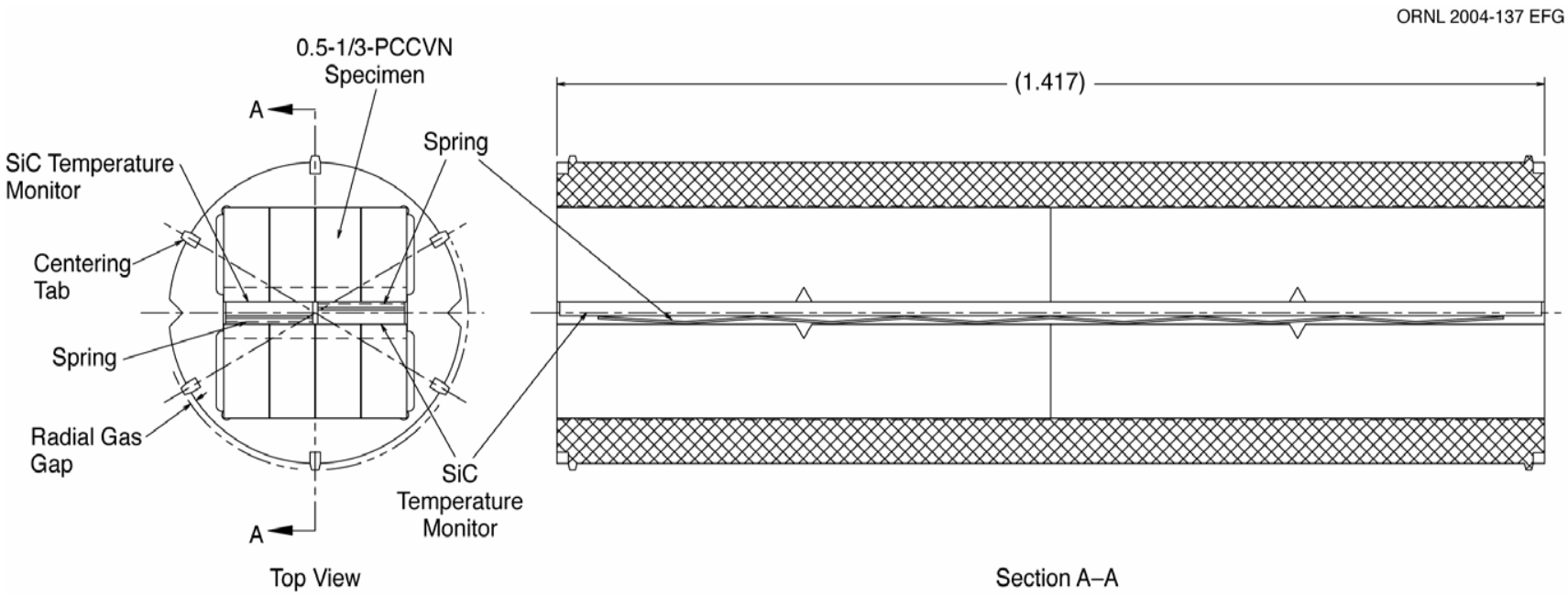

Figure 4. Specimen holder subassembly used in JP-26 for 0.5-1/3-PCCVN specimens.

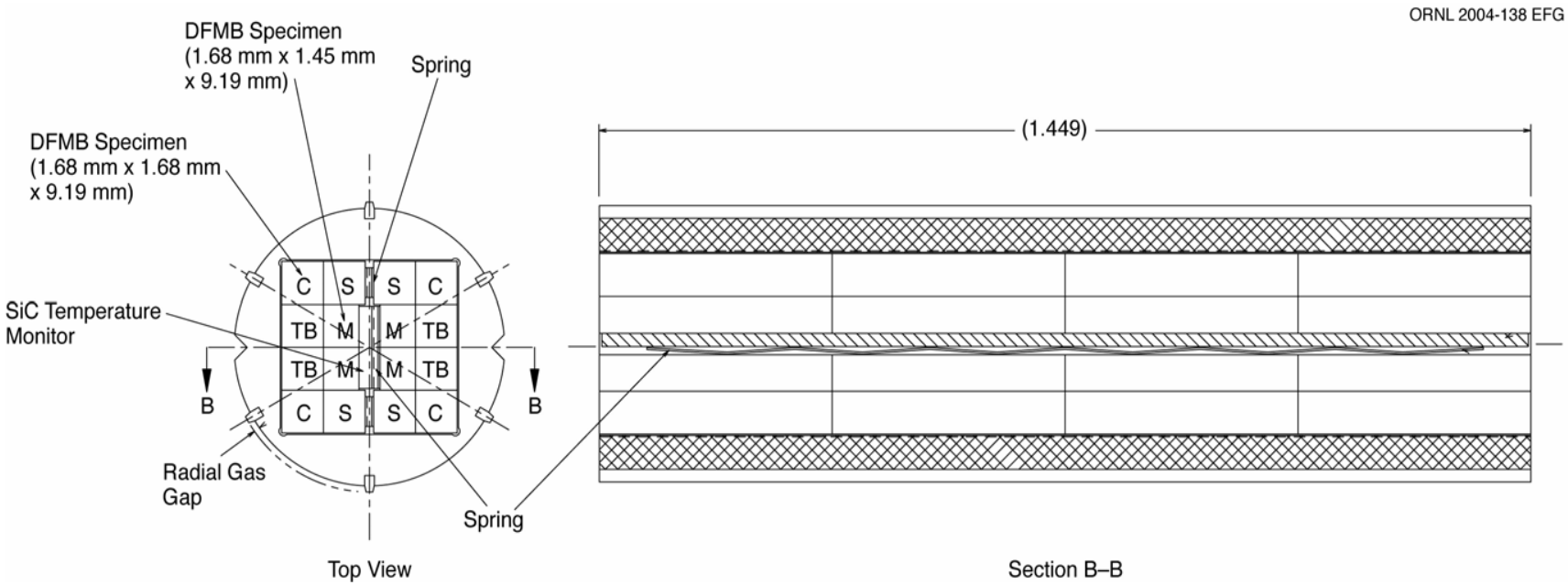

Figure 5. Specimen holder subassembly used in JP-26 for DFMB specimens.

Table 1. JP-26 SPECIMEN & DOSIMETRY LOADING LIST

POS. 1 JP-26	TEM Specimen Numbers									Passive Thermometry in Center Hole
		Hole No.1*	Engr. Face	Hole No.2*	Engr. Face	Hole No.3*	Engr. Face	Hole No.4*	Engr. Face	
BOTTOM	1	**016**	Down	**ZR12**	Down	**ZB10**	Up	**ZS11**	Up	
	2	**ZA15**	Up	**ZN13**	Up	**ZB11**	Up	**ZQ10**	Up	1.
	3	**017**	Down	**ZR13**	Up	**ZC10**	Up	**ZQ11**	Up	
	4	**ZF16**	Up	**012**	Down	**ZC11**	Up	**ZP18**	Up	
	5	**H16**	Down	**ZA12**	Up	**ZD10**	Up	**ZP11**	Up	Ser. #1
	6	**ZF17**	Up	**013**	Down	**ZD11**	Up	**ZR10**	Up	
	7	**H17**	Down	**ZF12**	Up	**ZE10**	Up	**ZR11**	Up	
	8	**UN16**	Up	**H12**	Down	**ZE11**	Up	**K10**	Up	
	9	**R16**	Down	**ZF13**	Up	**ZF10**	Up	**K11**	Up	
	10	**UN17**	Up	**H13**	Down	**ZF11**	Up	**K12**	Up	
	11	**R17**	Down	**UN12**	Up	**001**	Up	**K13**	Up	
	12	**ZH12**	Up	**R12**	Down	**011**	Up	**K14**	Up	
	13	**ZG12**	Down	**UN13**	Up	**H10**	Up	**M10**	Up	
	14	**ZH13**	Up	**R13**	Down	**H11**	Up	**M11**	Up	
	15	**ZG13**	Down	**ZP08**	Up	**blank**		**M12**	Up	
	16	**ZH14**	Up	**ZP13**	Up	**UN11**	Up	**M13**	Up	
	17	**ZG14**	Down	**0150**	Down	**310**	Up	**M14**	Up	
	18	**ZJ12**	Up	**ZA13**	Up	**311**	Up	**N10**	Up	
	19	**ZS14**	Down	**H14**	Down	**R10**	Up	**N11**	Up	
	20	**ZJ13**	Up	**ZA14**	Up	**R11**	Up	**N12**	Up	
	21	**ZS15**	Down	**H15**	Down	**ZG10**	Up	**N13**	Up	
	22	**ZJ14**	Up	**ZF14**	Up	**ZG11**	Up	**N14**	Up	
	23	**ZQ12**	Down	**R14**	Down	**ZH10**	Up	**P10**	Up	
	24	**ZK12**	Up	**ZF15**	Up	**ZH11**	Up	**P11**	Up	
	25	**ZQ13**	Down	**R15**	Down	**ZJ10**	Up	**P12**	Up	
	26	**ZK13**	Up	**015**	Up	**ZJ11**	Up	**P13**	Up	
TOP	27	**ZP16**	Down	**ZP14**	Down	**ZK10**	Up	**P14**	Up	
	28	**ZK14**	Up	**UN14**	Up	**ZK11**	Up			
	29	**ZP17**	Down	**ZP01**	Down	**ZN10**	Up			
	30	**ZN12**	Up	**UN15**	Up	**ZN11**	Up			
	31	**ZA10**	Up	**ZA11**	Up	**ZS10**	Up			
	ed 1, 2, 3, and 4 clockwise starting from 0.040 dia. hole between 2 holes in top of holder									

The spacer between positions number 1 and 2 contains Neutron Dosimeter Number <u>H5</u>

POS. 2 JP-26	SS-J3 Tensile Specimen	APFIM Specimen*	Passive Thermometry
	1. inner **N00**	1. **M02**	1.
	2. outer **K00**	2. **M03**	Ser. #1
	3. inner **N01**	3. **NO2**	2.
	4. outer **K01**	4. **N03**	Ser. #2
	5. inner **P00**	5. **P02**	3.
	6. outer **M00**	6. **P03**	Ser. #3
	7. inner **P01**	7. **(JNCX2)**	4.
	8. outer **M01**	8. **(JNCX2)**	Ser. #4

* Specimen numbers in parentheses are MMPC specimens

POS. 3 JP-26	SS-J3 Tensile Specimen	APFIM Specimen	Passive Thermometry
Top Half	1. inner **R10**	1. **ZQ16**	1. Ser. #17
	2. outer **ZP10**	2. **ZQ17**	
	3. inner **R11**	3. **ZQ22** (notched)	2. Ser. #18
	4. outer **ZP11**	4. **ZQ23** (notched)	
	5. inner **ZR10**	5. **ZR12**	3. Ser. #19
	6. outer **ZQ10**	6. **ZR13**	
	7. inner **ZR11**	7. **ZP12**	4. Ser. #20
	8. outer **ZQ11**	8. **ZP13**	
Bottom Half	SS-J3 Tensile Specimen	APFIM Specimen*	Passive Thermometry
	9. inner **G11**	9. **N10**	5. Ser. #21
	10. outer **G10**	10. **N11**	
	11. inner **G12**	11. **ZQ12**	6. Ser. #22
	12. outer **V11**	12. **ZQ13**	
	13. inner **UA02**	13. **ZQ14**	7. Ser. #23
	14. outer **W10**	14. **ZQ15**	
	15. inner **UA03**	15. **(JNCX2)**	8. Ser. #24
	16. outer **W11**	16. **(JNCX2)**	

* Specimen numbers in parentheses are MMPC specimens

POS. 4 JP-26	.5-1/3 PCCVN Spec.	Passive Thermometry	
Top Half	1. outer **004**	1. Ser. #1	2. Ser. #2
	2. inner **005**		
	3. inner **006**		
	4. outer **007**		
	5. outer **008**		
	6. inner **009**		
	7. inner **00A**		
	8. outer **00B**		
Bottom Half	.5-1/3 PCCVN Spec		
	9. outer **304**		
	10. inner **305**		
	11. inner **306**		
	12. outer **307**		
	13. outer **308**		
	14. inner **309**		
	15. inner **30A**		
	16. outer **30B**		

POS. 5 JP-26	SS-J3 Tensile Specimen	APFIM Specimen	Passive Thermometry
Top Half	1. inner **300**	1. **00D**	1. Ser. #25
	2. outer **000**	2. **00E**	
	3. inner **301**	3. **30D**	2. Ser. #26
	4. outer **001**	4. **30E**	
	5. inner **302**	5. **HOA**	3. Ser. #27
	6. outer **002**	6. **HOB**	
	7. inner **303**	7. **HOC**	4. Ser. #28
	8. outer **003**	8. **HOD**	
Bottom Half	SS-J3 Tensile Specimen	APFIM Specimen	Passive Thermometry
	9. inner **600**	9. **604**	5. Ser. #29
	10. outer **00F**	10. **605**	
	11. inner **601**	11. **HOE**	6. Ser. #30
	12. outer **00G**	12. **HOF**	
	13. inner **602**	13. **HOG**	7. Ser. #31
	14. outer **T00**	14. **BLANK** H & notched	
	15. inner **603**	15. **BLANK** H & notched	8. Ser. #32
	16. outer **T01**	16. **BLANK** H & notched	

The spacer between positions number 5 and 6 contains Neutron Dosimeter Number <u>L8</u>

POS. 6 JP-26	SS-J3 Tensile Specimen	APFIM Specimen	Passive Thermometry
Top Half	1. inner **610**	1. **614**	1. Ser. #33
	2. outer **310**	2. **615**	
	3. inner **611**	3. **ZJ10**	2. Ser. #34
	4. outer **311**	4. **ZJ11**	
	5. inner **612**	5. **ZK10**	3. Ser. #35
	6. outer **312**	6. **ZK11**	
	7. inner **613**	7. **ZN10**	4. Ser. #36
	8. outer **313**	8. **ZN11**	
Bottom Half	SS-J3 Tensile Specimen	APFIM Specimen	Passive Thermometry
	9. inner **01E**	9. **01C**	5. Ser. #37
	10. outer **010**	10. **01D**	
	11. inner **T10**	11. **31C**	6. Ser. #38
	12. outer **011**	12. **31D**	
	13. inner **T11**	13. **ZG10**	7. Ser. #39
	14. outer **012**	14. **ZG11**	
	15. inner **V10**	15. **ZH10**	8. Ser. #40
	16. outer **013**	16. **ZH11**	

POS. 7 JP-26	SS-J3 Tensile Specimen	APFIM Specimen	Passive Thermometry
Top Half	1. inner **V20**	1. **ZG20**	1. Ser. #41
	2. outer **G22**	2. **ZG21**	
	3. inner **V21**	3. **ZQ22**	2. Ser. #42
	4. outer **T21**	4. **ZQ23**	
	5. inner **W20**	5. **ZQ24**	3. Ser. #43
	6. outer **UA04**	6. **ZQ25**	
	7. inner **W21**	7. **ZQ26**	4. Ser. #44
	8. outer **UA05**	8. **ZQ27**	
Bottom Half	SS-J3 Tensile Specimen	APFIM Specimen	Passive Thermometry
	9. inner **620**	9. **ZH20**	5. Ser. #45
	10. outer **02E**	10. **ZH21**	
	11. inner **621**	11. **ZJ20**	6. Ser. #46
	12. outer **02F**	12. **ZJ21**	
	13. inner **622**	13. **ZK20**	7. Ser. #47
	14. outer **02G**	14. **ZK21**	
	15. inner **623**	15. **ZN20**	8. Ser. #48
	16. outer **T20**	16. **ZN21**	

POS. 8 JP-26	.5-1/3 PCCVN Spec.	Passive Thermometry	
Top Half	1. outer **024**	1. Ser. #3	2. Ser. #4
	2. inner **025**		
	3. inner **026**		
	4. outer **027**		
	5. outer **028**		
	6. inner **029**		
	7. inner **02A**		
	8. outer **02B**		
Bottom Half	.5-1/3 PCCVN Spec		
	9. outer **324**		
	10. inner **325**		
	11. inner **326**		
	12. outer **327**		
	13. outer **328**		
	14. inner **329**		
	15. inner **32A**		
	16. outer **32B**		

The spacer between positions number 8 and 9 contains Neutron Dosimeter Number <u>97</u>

POS. 9 JP-26	SS-J3 Tensile Specimen	APFIM Specimen*	Passive Thermometry
	1. inner **320**	1. **02C**	1. Ser. #5
	2. outer **020**	2. **02D**	
	3. inner **321**	3. **32C**	2. Ser. #6
	4. outer **021**	4. **32D**	
	5. inner **322**	5. **624**	3. Ser. #7
	6. outer **022**	6. **625**	
	7. inner **323**	7. **(JNCX2)**	4. Ser. #8
	8. outer **023**	8. **(JNCX2)**	

* Specimen numbers in parentheses are MMPC specimens

POS. 10 JP-26	TEM Specimen Nubers									Passive Thermometry in Center Hole
		Hole No.1*	Engr. Face	Hole No.2*	Engr. Face	Hole No.3*	Engr. Face	Hole No.4*	Engr. Face	
BOTTOM	1	**026**	Down	**ZR22**	Down	**ZB20**	Up	**ZS21**	Up	
	2	**ZA25**	Up	**ZN23**	Up	**ZB21**	Up	**ZQ20**	Up	1.
	3	**027**	Down	**ZR23**	Up	**ZC20**	Up	**ZQ21**	Up	
	4	**ZF26**	Up	**022**	Down	**ZC21**	Up	**ZP19**	Up	
	5	**H26**	Down	**ZA22**	Up	**ZD20**	Up	**ZP29**	Up	Ser. #2
	6	**ZF27**	Up	**023**	Down	**ZD21**	Up	**ZR20**	Up	
	7	**H27**	Down	**ZF22**	Up	**ZE20**	Up	**ZR21**	Up	
	8	**UN26**	Up	**H22**	Down	**ZE21**	Up	**K20**	Up	
	9	**R26**	Down	**ZF23**	Up	**ZF20**	Up	**K21**	Up	
	10	**UN27**	Up	**H23**	Down	**ZF21**	Up	**K22**	Up	
	11	**R27**	Down	**UN22**	Up	**020**	Up	**K23**	Up	
	12	**ZH22**	Up	**R22**	Down	**021**	Up	**K24**	Up	
	13	**ZG22**	Down	**UN23**	Up	**H20**	Up	**M20**	Up	
	14	**ZH23**	Up	**R23**	Down	**H21**	Up	**M21**	Up	
	15	**ZG23**	Down	**ZP28**	Up	**UN20**	Up	**M22**	Up	
	16	**ZH24**	Up	**ZP12**	Up	**UN21**	Up	**M23**	Up	
	17	**ZG24**	Down	**025+**	Down	**320**	Up	**M24**	Up	
	18	**ZJ22**	Up	**ZA23**	Up	**321**	Up	**N20**	Up	
	19	**ZS24**	Down	**H24**	Down	**R20**	Up	**N21**	Up	
	20	**ZJ23**	Up	**ZA24**	Up	**R21**	Up	**N22**	Up	
	21	**ZS25**	Down	**H25**	Down	**ZG20**	Up	**N23**	Up	
	22	**ZJ24**	Up	**ZF24**	Up	**ZG21**	Up	**N24**	Up	
	23	**ZQ22**	Down	**R24**	Down	**ZH20**	Up	**P20**	Up	
	24	**ZK22**	Up	**ZF25**	Up	**ZH21**	Up	**P21**	Up	
	25	**ZQ23**	Down	**R25**	Down	**ZJ20**	Up	**P22**	Up	
	26	**ZK23**	Up	**025**	Up	**ZJ21**	Up	**P23**	Up	
	27	**ZP26**	Down	**ZP20**	Down	**ZK20**	Up	**P24**	Up	
	28	**ZK24**	Up	**UN24**	Up	**ZK21**	Up			
	29	**ZP27**	Down	**ZP25**	Down	**ZN20**	Up			
TOP	30	**ZN22**	Up	**UN25**	Up	**ZN21**	Up			
	31	**ZA20**	Up	**ZA21**	Up	**ZS20**	Up			

*Holes numbered 1, 2, 3, and 4 clockwise starting from 0.040 dia. hole between 2 holes in top of holder

POS. 11 JP-26	SS-J3 Tensile Specimen	APFIM Specimen	Passive Thermometry
Top Half	1. inner **G20**	1. **H26**	1. Ser. #49
	2. outer **H22**	2. **H27**	
	3. inner **G21**	3. **H28**	2. Ser. #50
	4. outer **H23**	4. **H29**	
	5. inner **H20**	5. **H2A**	3. Ser. #51
	6. outer **H24**	6. **H2B**	
	7. inner **H21**	7. **N20**	4. Ser. #52
	8. outer **H25**	8. **N21**	
Bottom Half	SS-J3 Tensile Specimen	APFIM Specimen	Passive Thermometry
	9. inner **R20**	9. **ZP22**	5. Ser. #53
	10. outer **ZP20**	10. **ZP23**	
	11. inner **R21**	11. **ZQ12** (notched)	6. Ser. #54
	12. outer **ZP21**	12. **ZQ13** (notched)	
	13. inner **ZR20**	13. **ZR22**	7. Ser. #55
	14. outer **ZQ20**	14. **ZR23**	
	15. inner **ZR21**	15. **ZS20**	8. Ser. #56
	16. outer **ZQ21**	16. **ZS21**	

POS. 12 JP-26	.5-1/3 PCCVN Spec.	Passive Thermometry	
Top Half	1. outer **014**	1. Ser. #5	2. Ser. #6
	2. inner **015**		
	3. inner **016**		
	4. outer **017**		
	5. outer **018**		
	6. inner **019**		
	7. inner **01A**		
	8. outer **01B**		
Bottom Half	.5-1/3 PCCVN Spec		
	9. outer **314**		
	10. inner **315**		
	11. inner **316**		
	12. outer **317**		
	13. outer **318**		
	14. inner **319**		
	15. inner **31A**		
	16. outer **31B**		

POS. 13 JP-26	SS-J3 Tensile Specimen	APFIM Specimen	Passive Thermometry
	1. inner **H14**	1. **H18**	1. Ser. #9
	2. outer **H10**	2. **H19**	
	3. inner **H15**	3. **H1A**	2. Ser. #10
	4. outer **H11**	4. **H1B**	
	5. inner **H16**	5. **H1C**	3. Ser. #11
	6. outer **H12**	6. **H1D**	
	7. inner **H17**	7. **ZS10**	4. Ser. #12
	8. outer **H13**	8. **ZS11**	

The spacer between positions number 13 and 14 contains Neutron Dosimeter Number 2F

POS. 14 JP-26	Outer Layer* DFBM Specimens (.066 x .066 x .362)												Inner Layer* DFBM Specimens (.057 x .066 x .362)				Passive Therm.
	C	C	C	C	S	S	S	S	TB	TB	TB	TB	M	M	M	M	
Layer 1 **TOP**	1 **H02a**	2 **H02b**	3 **H02c**	4 **H02d**	5 **00Ca**	6 **00Cb**	7 **00Cc**	8 **00Cd**	9 **30Ca**	10 **30Cb**	11 **30Cc**	12 **30Cd**	1 **H03a**	2 **H03b**	3 **H03c**	4 **H03d**	1. Ser. #1
Layer 2	**H02e**	**H02f**	**H02g**	**H02h**	**00Ce**	**00Cf**	**00Cg**	**00Ch**	**30Ce**	**30Cf**	**30Cg**	**30Ch**	**H03e**	**H03f**	**H03g**	**H03h**	
Layer 3	**H02j**	**H02k**	**H02m**	**H02n**	**00Cj**	**00Ck**	**00Cm**	**00Cn**	**30Cj**	**30Ck**	**30Cm**	**30Cn**	**H03j**	**H03k**	**H03m**	**H03n**	
Layer 4 **BOT.**	**H02p**	**H02q**	**H02r**	**H02s**	**00Cp**	**00Cq**	**00Cr**	**00Cs**	**30Cp**	**30Cq**	**30Cr**	**30Cs**	**H03p**	**H03q**	**H03r**	**H03s**	

* For position designations C, S, TB, and M, see Figure 5.

POS. 15 JP-26	SS-J3 Tensile Specimen	APFIM Specimen	Passive Thermometry
Top Half	1. inner **H06**	1. **ZQ02**	1. Ser. #57
	2. outer **H00**	2. **ZQ03**	
	3. inner **H07**	3. **ZQ04**	2. Ser. #58
	4. outer **H01**	4. **ZQ05**	
	5. inner **H08**	5. **ZQ06**	3. Ser. #59
	6. outer **H04**	6. **ZQ07**	
	7. inner **H09**	7. **ZQ08**	4. Ser. #60
	8. outer **H05**	8. **ZQ09**	
Bottom Half	SS-J3 Tensile Specimen	APFIM Specimen	Passive Thermometry
	9. inner **G00**	9. **ZH00**	5. Ser. #61
	10. outer **V00**	10. **ZH01**	
	11. inner **G01**	11. **ZJ00**	6. Ser. #62
	12. outer **V01**	12. **ZJ01**	
	13. inner **UA00**	13. **ZK00**	7. Ser. #63
	14. outer **W00**	14. **ZK01**	
	15. inner **UA01**	15. **ZN00**	8. Ser. #64
	16. outer **W01**	16. **ZN01**	

POS. 16 JP-26	SS-J3 Tensile Specimen	APFIM Specimen	Passive Thermometry
	1. inner **R00**	1. **ZG00**	1. Ser. #13
	2. outer **ZP00**	2. **ZG01**	
	3. inner **R01**	3. **ZP02**	2. Ser. #14
	4. outer **ZP01**	4. **ZP03**	
	5. inner **ZR00**	5. **ZQ02** (notched)	3. Ser. #15
	6. outer **ZQ00**	6. **ZQ03** (notched)	
	7. inner **ZR01**	7. **ZR02**	4. Ser. #16
	8. outer **ZQ01**	8. **ZR03**	

POS. 17 JP-26		TEM Specimen Numbers								Passive Thermometry in Center Hole
		Hole No.1*	Engr. Face	Hole No.2*	Engr. Face	Hole No.3*	Engr. Face	Hole No.4*	Engr. Face	
BOTTOM	1	**006**	Down	**ZR02**	Down	**ZB00**	Up	**ZS01**	Up	
	2	**ZA05**	Up	**ZN03**	Up	**ZB01**	Up	**ZQ00**	Up	1. Ser. #3
	3	**007**	Down	**ZR03**	Up	**ZC00**	Up	**ZQ01**	Up	
	4	**ZF06**	Up	**002**	Down	**ZC01**	Up	**ZP09**	Up	
	5	**H06**	Down	**ZA02**	Up	**ZD00**	Up	**ZP0A**	Up	
	6	**ZF07**	Up	**003**	Down	**ZD01**	Up	**ZR00**	Up	
	7	**H07**	Down	**ZF02**	Up	**ZE00**	Up	**ZR01**	Up	
	8	**UN06**	Up	**H02**	Down	**ZE01**	Up	**K00**	Up	
	9	**R06**	Down	**ZF03**	Up	**ZF00**	Up	**K01**	Up	
	10	**UN07**	Up	**H03**	Down	**Blank**		**K02**	Up	
	11	**R07**	Down	**UN02**	Up	**000**	Up	**K03**	Up	
	12	**ZH02**	Up	**R02**	Down	**001**	Up	**K04**	Up	
	13	**ZG02**	Down	**UN03**	Up	**H00**	Up	**M00**	Up	
	14	**ZH03**	Up	**R03**	Up	**H01**	Up	**M01**	Up	
	15	**ZG03**	Down	**ZP02**	Up	**UN10**	Up	**M02**	Up	
	16	**ZH04**	Up	**ZP03**	Up	**UN01**	Up	**M03**	Up	
	17	**ZG04**	Down	**005+**	Down	**300**	Up	**M04**	Up	
	18	**ZJ02**	Up	**ZA03**	Up	**301**	Up	**N00**	Up	
	19	**ZS04**	Down	**H04**	Down	**R00**	Up	**N01**	Up	
	20	**ZJ03**	Up	**ZA04**	Up	**R01**	Up	**N02**	Up	
	21	**ZS05**	Down	**H05**	Down	**ZG00**	Up	**N03**	Up	
	22	**ZJ04**	Up	**ZF01**	Up	**ZG01**	Up	**N04**	Up	
	23	**ZQ02**	Down	**R04**	Down	**ZH00**	Up	**P00**	Up	
	24	**ZK02**	Up	**ZF05**	Up	**ZH01**	Up	**P01**	Up	
	25	**ZQ03**	Down	**R05**	Down	**ZJ00**	Up	**P02**	Up	
	26	**ZK03**	Up	**005**	Up	**ZJ01**	Up	**P03**	Up	
	27	**ZP10**	Down	**ZP04**	Down	**ZK00**	Up	**P04**	Up	
	28	**ZK04**	Up	**UN04**	Up	**ZK01**	Up			
TOP	29	**ZP07**	Down	**ZP05**	Down	**ZN00**	Up			
	30	**ZN02**	Up	**UN05**	Up	**ZN01**	Up			
	31	**ZA00**	Up	**ZA01**	Up	**ZS00**	Up			

*Holes numbered 1, 2, 3, and 4 clockwise starting from 0.040 dia. hole between 2 holes in top of holder

The bottom spacer below position number 17 contains Neutron Dosimeter Number **E1**