PLANNING OF THE US-JAPAN JP-26 EXPERIMENT FOR IRRADIATION IN THE HFIR - R. E. Stoller (Oak Ridge National Laboratory) and H. Tanigawa (Japan Atomic Energy Research Institute, Tokai, Japan)

OBJECTIVE

This work is being carried out under Annex I of the Collaboration on Fusion Materials between the US DOE and the Japan Atomic Energy Research Institute. The JP-26 experiment is one component of the Phase-IV experiments with the goal of elucidating the effects of helium in candidate engineering and model alloys, and verifying the irradiation response of alloy F82H.

SUMMARY

The experimental matrix for JP-26 was finalized and final design of the irradiation vehicle was completed. Components needed to build the irradiation vehicle are being machined and will be delivered to ORNL by late August. Most of the necessary specimens have been fabricated and final delivery to ORNL is expected by late August. Assembly of the experiment is expected to take place in early September so that the irradiation can begin by mid September.

PROGRESS AND STATUS

Introduction

This experiment is being carried out within the framework of the US DOE-JAERI Collaboration on Fusion Materials, Annex I, which is in its fourth phase. The goals of the experiment include the investigation of the effects of helium on microstructural evolution, the impact of helium on fracture properties, and the development of engineering data on the fusion candidate alloy F82H. A more detailed description of the experiment will be provided in a subsequent report. The goal of this report is to provide a summary of the final design of the JP-26 capsule and the specimens contained in its 17 subcapsules.

Overall Description of JP-26 Capsule

The final design of the JP-26 capsule includes 17 subcapsules designed to accommodate 6 types of specimens and irradiate them at 3 temperatures, 300, 400, and 500°C. The specimen types are a small bendbar (deformation-fracture minibeam, DFMB), a sheet tensile specimen (SS-J3), a subsized pre-crack Charpy V-notch specimen (0.5-1/3-PCCVN), transmission electron microscopy disks (TEM), atom probe specimens (APFIM), and small multi-purpose coupons (MMPC) that have the same overall dimensions as the APFIM specimens. The specimen count at each temperature and the overall specimen dimensions are listed in Table 1. Figure 1 provides a description of the APFIM specimens that are being included in the JP-26 experiment. The pre-slit “tuning forks” are designed to simply handling and sorting, while permitting the two specimens to be made with a single cut following irradiation.

The physical stack up and the capacities of the 17 subcapsules contained in the JP-26 capsule are shown in Table 2. The higher temperature subcapsules are located nearer the vertical centerline where the gamma heating rate is highest. The neutron flux is also higher in this region, will lead to higher irradiation doses for the specimens exposed at the higher temperatures. The relative atomic displacement rate varies from 1.0 at the centerline to about 0.4 at the top or bottom of the capsule. A complete breakdown of the materials and specimens at each temperature is listed in Tables 3 to 5.

Table 1. -- JP26: Total specimen count by type and temperature:

specimen type	irradiation temperature (°C)	specimen count	specimen dimensions (mm)
DFMB	300	64	9.19x1.67x1.67
	400	0	
	500	0	
SS-J3	300	48	16x4x0.76
	400	40	
	500	40	
0.5-1/3 PCCVN	300	16	3.3x1.65x18
	400	16	
	500	16	
TEM	300	100	□3x0.25
	400	100	
	500	100	
APFIM or MMPC	300	48	16x1.25x0.5
	400	40	
	500	40	

Figure 1. – APFIM specimen geometry

- two pair (4) of the 'tuning fork' specimens is required for each material
- 1.25mm x 1.0mm x 16mm space is required in each corner of SS-J3 holder

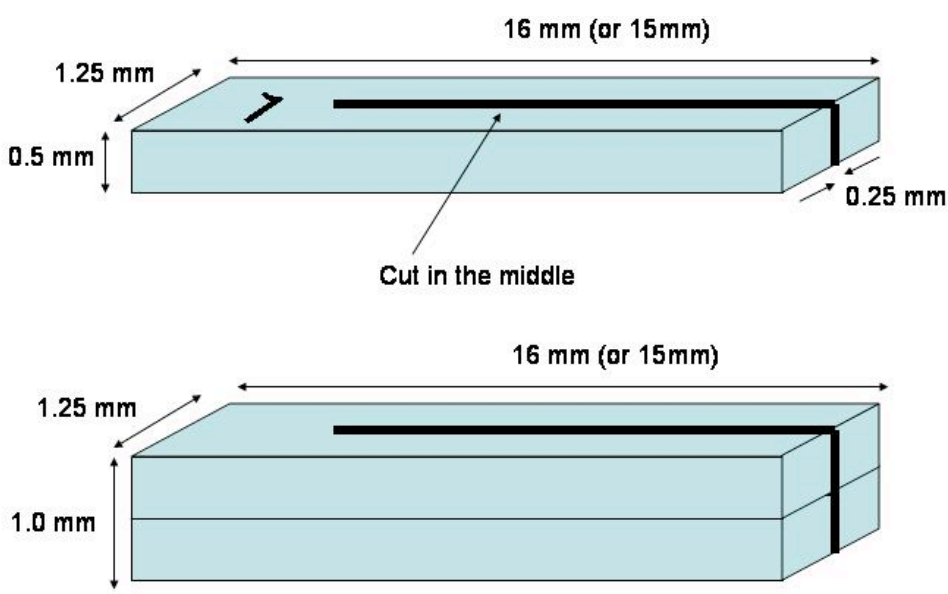

Table 2. - JP26 final capsule layout

subcapsule number top of capsule	subcapsule type	specimen count	temperature
1	TEM	100	400
2	SS-J3 + APFIM	8 8	300
3	SS-J3 + APFIM	16 16	400
4	0.5-1/3 PCCVN	16	300
5	SS-J3 + APFIM	16 16	300
6	SS-J3 + APFIM	16 16	400
7	SS-J3 + APFIM	16 16	500
8	0.5-1/3 PCCVN	16	500
9	SS-J3 + APFIM	8 8	500
10	TEM	100	500
11	SS-J3 + APFIM	16 16	500
12	0.5-1/3 PCCVN	16	400
13	SS-J3 + APFIM	8 8	400
14	DFMB	64	300
15	SS-J3 + APFIM	16 16	300
16	SS-J3 + APFIM	8 8	300
17	TEM	100	300
bottom of capsule			

ACKNOWLEDGMENT

This experiment is being designed by a multi-institutional team from JAERI, ORNL, PNNL, and the University of California, Santa Barbara.

TABLE 3

JP-26	Tensile									Toughness						Bend bar			TEM						APFIM			MMPC		
	SS-J3			SS-J3 with hole			SS-J3 with notch			0.5-1/3PCCVN			DFMB			DFMB						Ni/Al plated								
	48.0			48.0			48.0			98.0			24.5			24.5			2.0			2.0			9.2			9.2		
300 C. 10 dpa	Share	JP	US	Share	JP	US	Share	JP	US	Share	JP	US	Share	JP	US	Share	JP	US	Share	JP	US	Share	JP	US	Share	JP	US	Share	JP	US
F82H IEA	6									8			16								3			5	2					
F82H TIG WJ																														
F82H TIG WB																														
F82H+1.4%Ni	4									8			16								2				2					
F82H+1.4%Ni60	4																								2					
F82H mod1-A		2																												
F82H mod1-B		2																												
F82H mod1-C		2																												
F82H mod2		2																												
F82H mod3	4			2			2						16			16			2					6						10
JNC-ODS		2																		5						2				
JAERI ODS1		2																		5						2				
JAERI ODS2		2																		5						2				
JAERI ODS3		2																		5						2				
9Cr-2WVTa			2																											
Kobelco 12Cr ODS			2																		3			5			2			
Inco MA957 (Fr)			2																		2			2			2			8
Plansee PM2000			2																		2			2			2			
Eurofer97			2																		2			6						
U14YWT850																					2			3			2			
U14YWT1150																					5						2			
U14YW1150																					5						2			
O14YWT850																					5						2			
U14WT1000																					4						2			
US MA957																					2			2						
Fe																					6									
Fe-2Ni																					2									
Fe-3.5Ni																					2									
Fe-20%CW																					2									
Fe-2Ni+20%CW																					2									
Fe-3.5Ni+20%CW																					8									
F82H-mod.3+20%CW																					8									
sum	18	16	10	2	0	0	2	0	0	16	0	0	48	0	0	16	0	0	2	20	67	0	0	31	6	8	16	0	0	18

TABLE 4

JP-26	Tensile									Toughness						Bend bar			TEM						APFIM			MMPC		
	SS-J3			SS-J3 with hole			SS-J3 with notch			0.5-1/3PCCVN			DFMB			DFMB						Ni/Al plated								
	48.0			48.0			48.0			98.0			24.5			24.5			2.0			2.0			9.2			9.2		
400 C, 10 dpa	Share	JP	US	Share	JP	US	Share	JP	US	Share	JP	US	Share	JP	US	Share	JP	US	Share	JP	US	Share	JP	US	Share	JP	US	Share	JP	US
F82H IEA	5									8											3			5	2					2
F82H TIG WJ																														
F82H TIG WB																														
F82H+1.4%Ni	4									8											2				2					
F82H+1.4%Ni60	4																								2					
F82H mod1-A		2																												
F82H mod1-B		2																												
F82H mod1-C		2																												
F82H mod2		3																												
F82H mod3	4			2			2												2					6						6
JNC-ODS																				5						2				
JAERI ODS1																				5										
JAERI ODS2																				5						2				
JAERI ODS3																				5										
9Cr-2WVTa			2																											
Kobelco 12Cr ODS(12YWT)			2																		3			5			2			
Inco MA957 (Fr)			2																		2			2			2			6
Plansee PM2000 (EuroODS)			2																		2			2			2			
Eurofer97			2																		2			6						
U14YWT850																					2			3			2			
U14YWT1150																					5						2			
U14YW1150																					5						2			
O14YWT850																					5						2			
U14WT1000																					4						2			
US MA957																					2			2			2			
Fe																					6									
Fe-2Ni																					2									
Fe-3.5Ni																					2									
Fe-20%CW																					2									
Fe-2Ni+20%CW																					2									
Fe-3.5Ni+20%CW																					8									
F82H-mod.3+20%CW																					8									
sum	17	9	10	2	0	0	2	0	0	16	0	0	0	0	0	0	0	0	2	20	67	0	0	31	4	4	18	0	0	14

TABLE 5

JP-26	Tensile									Toughness						Bend bar			TEM						APFIM			MMPC		
	SS-J3			SS-J3 with hole			SS-J3 with notch			0.5-1/3PCCVN			DFMB			DFMB						Ni/Al plated								
	48.0			48.0			48.0			98.0			24.5			24.5			2.0			2.0			9.2			9.2		
500 C,10 dpa	Share	JP	US	Share	JP	US	Share	JP	US	Share	JP	US	Share	JP	US	Share	JP	US	Share	JP	US	Share	JP	US	Share	JP	US	Share	JP	US
F82H IEA	7									8											3			5	2					
F82H TIG WJ																														
F82H TIG WB																														
F82H+1.4%Ni	4									8											2				2					
F82H+1.4%Ni60	4																								2					
F82H mod1-A		2																												
F82H mod1-B		2																												
F82H mod1-C		2																												
F82H mod2		3																												
F82H mod3	6																		2					6						6
JNC-ODS																				5						2				
JAERI ODS1																				5										
JAERI ODS2																				5						2				
JAERI ODS3																				5										
9Cr-2WVTa			2																											
Kobelco 12Cr ODS(12YWT)			2																		3			5			2			
Inco MA957 (Fr)			2																		2			2			2			6
Plansee PM2000 (EuroODS)			2																		2			2			2			
Eurofer97			2																		2			6						
U14YWT850																					2			3			2			
U14YWT1150																					5						2			
U14YW1150																					5						2			
O14YWT850																					5						2			
U14WT1000																					4						2			
US MA957																					2			2			2			
Fe																					6									
Fe-2Ni																					2									
Fe-3.5Ni																					2									
Fe-20%CW																					2									
Fe-2Ni+20%CW																					2									
Fe-3.5Ni+20%CW																					8									
F82H-mod.3+20%CW																					8									
sum	21	9	10	0	0	0	0	0	0	16	0	0	0	0	0	0	0	0	2	20	67	0	0	31	6	4	18	0	0	12