MODELING THE TRANSVERSE THERMAL CONDUCTIVITY OF 3D-SIC$_F$/SIC COMPOSITES—G. E. Youngblood and R. H. Jones (Pacific Northwest National Laboratory)* and Reiji Yamada (JAERI, Tokai-mura, JP)

OBJECTIVE

The primary objective of this task is to assess the thermal conductivity of SiC/SiC composites made from SiC fibers (with various SiC-type matrices, fiber coatings and architectures) before and after irradiation and to develop analytic models that describe the transverse and in-plane thermal conductivity of these composites as a function of constituent properties and geometry as well as temperature and dose.

SUMMARY

Our previously developed hierarchical two-layer (H2L) model was modified to describe the effective transverse thermal conductivity (K_{eff}) of a three-dimensional (3D) SiC/SiC composite plate made with cross-layered and Z-stitched X:Y:Z uniaxial fiber tow sub-units. As before, the model describes K_{eff} in terms of constituent, microstructural and architectural properties that include the expected effects of fiber-matrix interfacial conductance, of high fiber packing fractions within individual tow sub-units and of the non-uniform porosity contents, shapes and orientations within these sub-units. Model predictions were obtained for two versions of a 3D-Tyranno SA™/PyC/ICVI-SiC composite that had similar fiber/matrix pyrocarbon (PyC) interfaces, relatively high bulk densities (~2.88 g/cc), and an X:Y configuration with fiber content ratios 1:1. The only major difference between the two versions was their Z-stitch fiber content where the relative fiber ratios were 0.1 and 1.2 in the Z sub-units.

PROGRESS AND STATUS

Introduction

In previous work, the hierarchical two-layer (H2L) model for the effective transverse thermal conductivity (K_{eff}) of 2D-SiC/SiC was used to predict K_{eff} for various composites made with Hi-Nicalon™, Hi-Nicalon™ type S or Tyranno™ SA fabric layers and CVI-SiC matrix components [1]. The model included the effects of the interfacial conductance, which in a composite with numerous fiber/matrix (f/m) interfaces can have a profound influence on K_{eff}. In particular, the f/m interface in a 2D-SiC/SiC composite, especially if it is pyrocarbon (PyC), might be vulnerable to radiation degradation. In this case, the fibers could be thermally decoupled from the matrix, and K_{eff} likely would be decreased, perhaps severely. The H2L-model also included the effects of porosity content, shape and orientation, which are not expected to be affected by irradiation.

In this work, the H2L-model was modified to describe $K_{eff}(T)$ for a 3D-SiC/SiC. A 3D-SiC/SiC is envisioned as having numerous fibers aligned in the direction of the heat conduction, say the Z-direction, which could provide a “heat pipe” effect to increase K_{eff}. Furthermore, K_{eff} for a 3D-composite with a major portion of the heat conduction determined by fiber “heat pipes” might not be so susceptible to radiation degradation.

<u>The Hierarchical Model Approach</u>

In Fig. 1, a schematic diagram depicts the unit cell for a 3D-SiC/SiC composite plate made with cross-layered and Z-stitched X:Y:Z uniaxial fiber tow sub-units used for this study.

---

*Pacific Northwest National Laboratory (PNNL) is operated for the U.S. Department of Energy by Battelle Memorial Institute under contract DE-AC06-76RLO-1830.

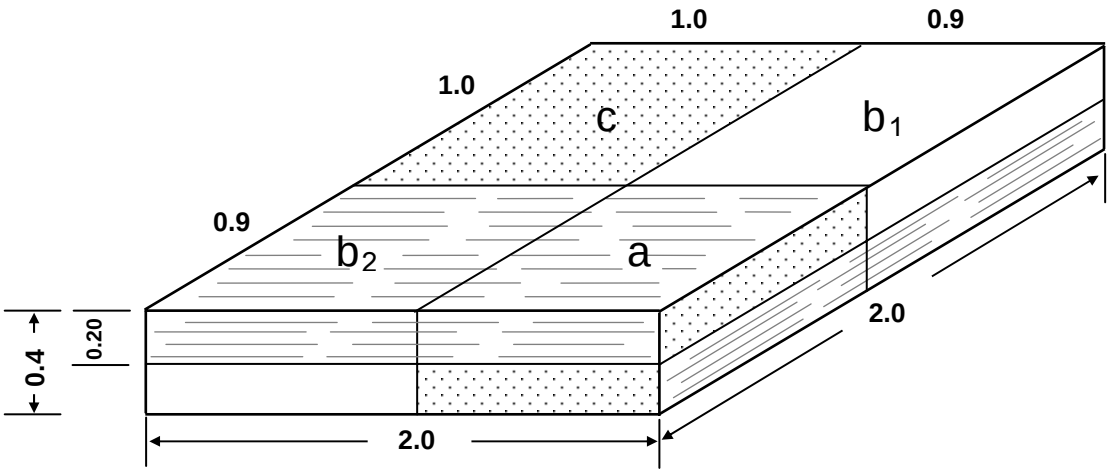

Fig. 1. Schematic of layered and Z-stitched 3D-SiC/SiC unit cell.

A unit cell for this configuration consists of three sub-units: sub-unit "a" contains two identical bars, one on top of another with uniaxial aligned fibers in alternate X:Y directions in a SiC matrix; sub-unit "b" also contains two bars one on top of another but with alternate bars containing either uniaxial aligned fibers in a matrix or no fibers (all matrix material); and sub-unit "c" contains only fibers in the Z-direction within a SiC matrix. There are two equivalent sub-unit "b" cells (b_1 and b_2) per unit cell. A simple parallel heat flow model then approximately describes K_{eff} of such a unit cell, which is made up of three parallel heat paths through sub-unit cells "a, b and c" with transverse area ratios f_a, f_b and f_c and effective thermal conductivities K_a, K_b and K_c, respectively. Thus,

$$K_{eff} = f_aK_a + f_bK_b + f_cK_c \quad (1),$$

within the limits of assuming adjoining parallel, non-interacting 1D conduction paths. The thermal conductivities of the three sub-unit cells are given by:

$$K_a = K_m[(1 - P_a)/(1 + \beta_aP_a)]f_a(HJ) \quad (2),$$

$$1/K_b = 0.5/K_a + 0.5/K_{b'} \quad \text{(series heat flow through adjoining layered bars)} \quad (3),$$

$$K_c = f_{Fc}K_f + f_{Mc}K_m \quad \text{(parallel heat flow through fiber and SiC matrix)} \quad (4).$$

In Eq. (2), the term in brackets is the Maxwell-Eucken thermal conductivity porosity correction where P_a and β_a are the volume fraction of pores and the pore shape and orientation factors in sub-unit "a" and also in one of the layered bars in sub-unit "b", respectively [2]. Also in Eq. (2), $f_a(HJ)$ is the Hasselman-Johnson expression# for treating the effect of the f/m interfacial thermal conductance on K_a, or on K_b in the other layered bar in sub-unit "b". In Eq. (3), $K_{b'}$ is the thermal conductivity of the layered bar with all SiC matrix and only a single, fairly large flat pore oriented with its flat surface perpendicular to the heat flow direction and located approximately in the middle of the bar. This pore remains after CVI deposits a SiC layer onto the surrounding fiber tows, but leaves a central gap between SiC surfaces advancing from all directions. Thus, $K_{b'} = K_m[(1 - P')/(1 + \beta'P')]$, where P' is the volume fraction of the single flat pore and β' is its shape and orientation factor. In Eq. (4), f_{Fc} and f_{Mc} are the volume fractions of Fiber

#$f_a(HJ) = [1-(A/B)f_p][1 + (A/B)f_p]^{-1}$ with $A = 1 + K_f/ah + K_f/K_m$ and $B = 1 + K_f/ah - K_f/K_m$ where ah is the product of the fiber radius a and the f/m interfacial conductance h [2].

and Matrix in sub-unit "c", respectively. Importantly, for the analysis of the 3D-SiC/SiC composite considered here, f_{Fc} and f_{Mc} are the only two parameters that differ between the two versions.

Specimens Tested

Disc-shaped 3D-SiC/SiC specimens (nominally 10-mm diameter x 3-mm thick) were provided by Reiji Yamada and made with X:Y:Z fiber contents 1:1:0.09, 1:1:0.2, 1:1:0.45, and 1:1:1.23, respectively. The fibers were Tyranno™ SA, and the SiC matrix was made by isothermal CVI. A thin PyC coating was applied to the SA-preforms prior to CVI. A full description of preparation and measured thermal diffusivity and conductivity values from RT up to 1000°C for a similar set of samples is given in Ref. [3]. From this set of samples, six discs, three with Z-stitch contents 0.09 and three with contents 1.23, were selected for detailed microstructural and additional thermal analysis. Using the laser flash technique, thermal diffusivity measurements were performed on all six discs in air from RT up to 400°C by methods described previously [4].

Results and Discussion

In Fig. 2(a), the thermal diffusivity values measured at PNNL are presented for the six selected 3D-SiC/SiC specimens made with layered and Z-stitched Tyranno™ SA fiber tow and ICVI-SiC matrix sub-units. For comparison, the average thermal diffusivity determined for a 2D-SiC/ICVI-SiC made with woven Hi-Nicalon™ fabric layers (thin PyC interface) also is shown [5]. In Fig. 2(b), the average reciprocal thermal diffusivity values for the two versions of 3D-SiC/SiC are given as a function of temperature based on the data shown in Fig. 2(a).

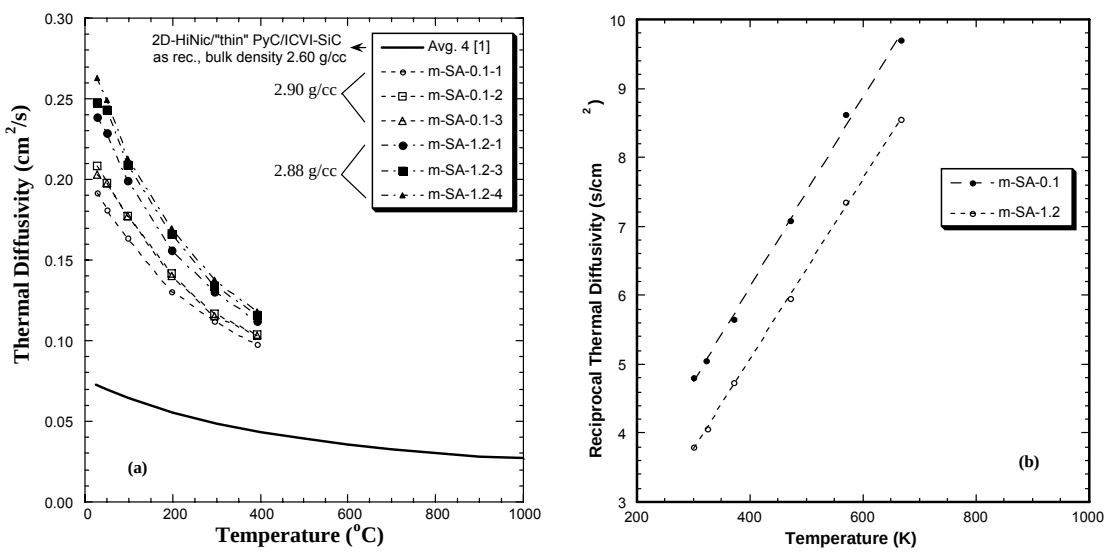

Figs. 2(a-b). (a) Thermal diffusivity of 3D-Tyranno SA/ICVI-SiC composites with X:Y = 1:1 and Z ~ 0.1 or 1.2, and (b) average reciprocal thermal diffusivity values for each version.

The thermal diffusivity values measured at PNNL over the RT-400°C temperature range match within a few % the values measured and reported previously by Yamada for similar composite compositions [3]. Furthermore, the diffusivity values are about x3 greater than values measured for the 2D-SiC/SiC made with Hi-Nicalon™ fibers [5]. The higher diffusivity values found for the 3D-SiC/SiC composites reflect both the Tyranno™ SA fibers having higher thermal conductivity than the Hi-Nicalon™ fibers and also the "heat pipe" effect of the Z-stitched fibers. A very good linear least squares fit (R^2 >0.997) was made to the Fig. 2(b) data and was used to estimate average values of thermal diffusivity by extrapolation

for temperatures up to 1000°C as previously shown to be fairly reliable [4]. The transverse thermal conductivity $K_{eff}(T)$ was then determined from the thermal diffusivity data, the measured bulk density values, and the specific heat values of SiC.

In Figs. 3(a-b), typical SEM micrographs show the fiber and pore distribution in a plane perpendicular to sub-unit "c" for the two versions of 3D-SiC/SiC with actual Z-fiber content ratios 0.09 and 1.23, respectively. Note the extremely full infiltration of the SiC matrix within and around the fiber bundles for both versions. Views of other sub-units exhibited similar, uniformly full matrix infiltration.

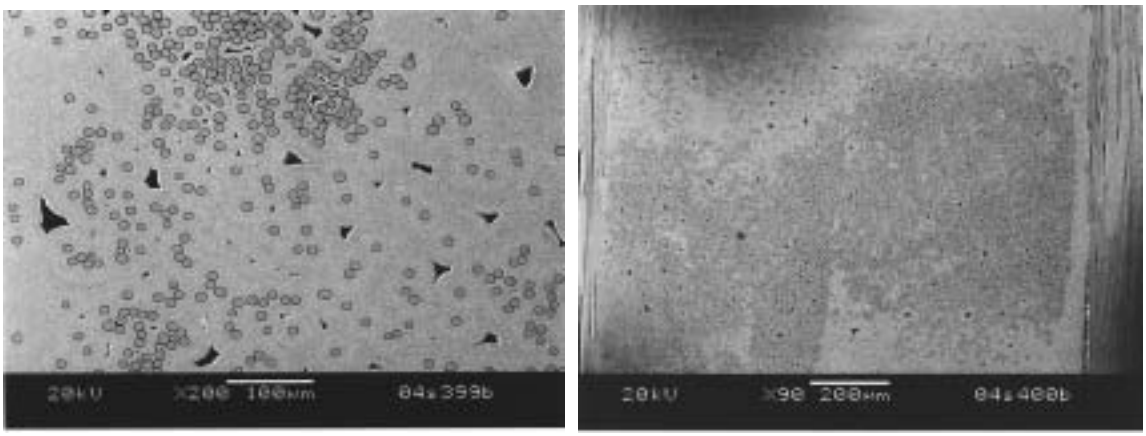

(a) (b)

Figs. 3(a-b). SEM micrographs (backscatter electron mode) of polished cross-sections of the "c" sub-unit cell regions showing the relative fiber packing and SiC matrix infiltration for the (a) X:Y:Z ~ 1:1:0.1 and (b) 1:1:1.2 versions of the 3D-Tyranno SA/ICVI-SiC composites.

In Table 1, dimensional, density and microstructural data determined from several SEM and optical micrographs for the two versions of 3D-SiC/SiC are given.

Table 1. Bulk density (ρ_b), dimensional and microstructural data for the 3D-Tyranno™ SA/ICVI-SiC with relative fiber contents X:Y:Z = 1:1:0.09 and 1:1:1.23.

Version	ρ_b (g/cc)	t (µm)	a (µm)	P_a	P'	β_b	f_p	f_{Fc}	f_{Mc}
1:1:0.09	2.88	0.20	5.00	0.090	0.21	5.6	0.52	0.059	0.936
1:1:1.23	2.88	same	same	same	same	same	same	0.513	0.440
Range	±0.02	±0.05	±0.6	±0.015	±0.09	±0.6	±0.02	±0.02	±0.02

In Table 1, because the X:Y structures are the same between the two versions, the only parameters that differ are the fractions of fiber and matrix in the "c" sub-units. Likewise, the Hasselman-Johnson factor for treating the effect of the f/m interfacial conductance is assumed the same for both versions. In Eq. (2), β_a ~ 1 for the "needle-like" pores parallel to the fibers and perpendicular to the transverse thermal conduction.

In Figs. 4 (a-b), the thermal conductivity values, $K_{eff}(T)$, $K_c(T)$, and $K_f(T)$, which are input data for our 3D-H2L model, are presented for the two examined SiC/SiC versions with Z ~ 0.1 or Z ~ 1.2, respectively. The model prediction for $K_m(T)$ is then shown as a bolded continuous solid line. For comparison, $K_m(T)$ for a 2D-Nicalon™ type S/PyC/ICVI-SiC composite also is shown [1]. In both these figures, the values of $K_{eff}(T)$ were calculated from the measured thermal diffusivity data given in

Figs. 2(a-b), the values of $K_c(T)$ taken from Ref. [2], and the values of $K_f(T)$ estimated from data provided by UBE for the Tyranno™ SA fiber.

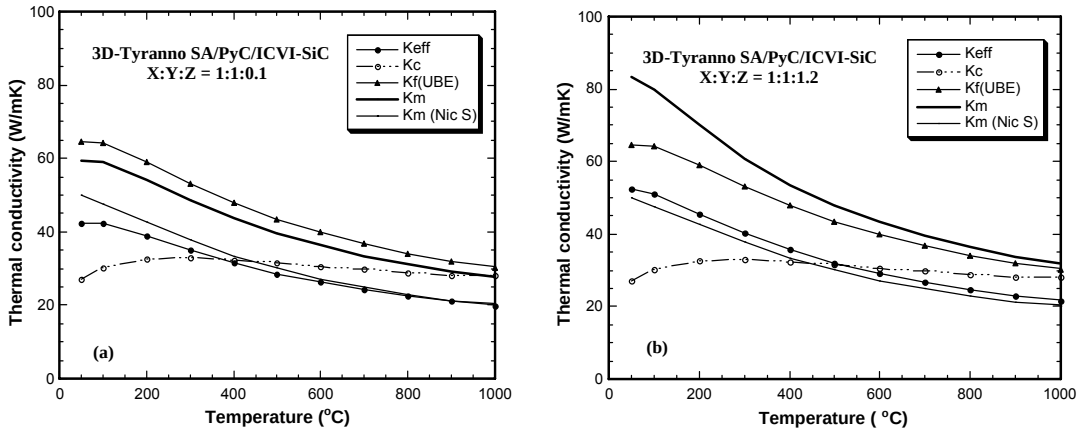

Figs. 4(a-b). 3D-H2L model predictions for K_m based on measured values of K_{eff} and K_f(UBE), and on values of K_c from Ref. [2] for 3D-Tyranno SA/PyC/ICVI-SiC with (a) X:Y:Z ~ 1:1:0.1 and (b) X:Y:Z ~ 1:1:1.2, respectively. For comparison, K_m for a 2D-Nicalon type S/PyC/ICVI-SiC composite also is shown.

For these two similar composites with X:Y:Z configurations ~ 1:1:0.1 and 1:1:1.2, $K_{eff}(T)$-values ranged from 42 and 52 W/mK at 50°C down to about 20 and 22 W/mK at 1000°C, respectively. These values of K_{eff} for this 3D-SiC/SiC composite exceed by 25% or more the highest K_{eff}-values reported for 2D-SiC/SiC made by any CVI-process.

The predicted values of $K_m(T)$ were derived by iteration until the model predictions for $K_{eff}(T)$ converged onto the measured $K_{eff}(T)$-values. It is noted that the $K_{eff}(T)$-values are rather insensitive to the $K_c(T)$-values used for these thermally well-coupled composites, so $K_c(T)$-values obtained previously for well-coupled 2D-SiC/ICVI-SiC composites were used. The predicted $K_m(T)$-values ranged from 60 W/mK at 50°C down to 28 W/mK at 1000°C for the Z ~ 0.1 version; and from ~80 W/mK at 50°C down to 32 W/mK at 1000°C for the Z ~ 1.2 version. However, the $K_m(T)$-values should not differ for these two versions with similar ICVI-SiC matrix infiltration. Furthermore, the predicted $K_m(T)$-values should approximately match the $K_m(T)$-values determined for the Nicalon™ type S composite with a similar SiC matrix. Finally, if K_{eff} increases with increasing Z-fiber content, K_f should be greater than K_m. Although K_f is slightly larger than K_m for the composite with Z ~ 0.1 fiber content, this definitely is not the case for the composite with Z ~ 1.2 fiber content. The latter case suggests that the $K_f(T)$-values used in the previous model predictions were too low.

To examine this possibility further, model predictions were repeated by performing iterations while allowing both K_m and K_f to vary until predicted K_{eff}-values matched measured K_{eff}-values, but with the restriction that the K_m and K_f variables must be the same for both composite versions. Such an iteration scheme might be compared to solving two equations with two unknowns in algebra. The results are shown in Fig. 5.

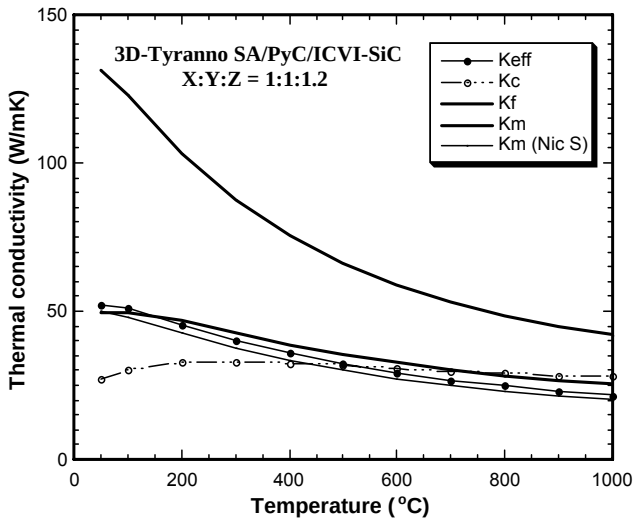

Fig. 5. 3D-H2L model predictions of K_m and K_f based on measured values of K_{eff} and K_c for each version of 3D-Tyranno SA/PyC/ICVI-SiC with X:Y:Z ~ 1:1:0.1 or 1:1:1.2 (only the data for Z ~ 1.2 are shown). The iteration scheme required that K_f and K_m have the same values for each version. Again, for comparison $K_m(T)$-values for a 2D-Nicalon™ type S SiC/SiC composite also are shown.

The predicted $K_m(T)$-values now range from 50 W/mK at 50°C down to 26 W/mK at 1000°C for both versions (only the data for the Z ~ 1.2 case are shown in the figure). Furthermore, the predicted $K_m(T)$-values now approximately match (within ~ 5-10%) the $K_m(T)$-values predicted for the 2D-Nicalon™ type S composite. These two observations strongly suggest that the $K_f(T)$-values used for the Tyranno™ SA fiber in these two versions of 3D-composite actually have much higher values than the stated $K_f(T)$-values for bare fiber given by UBE. If this is the case, the thermal conductivity of the Tyranno™ SA fiber in these composites ranges from about 130 W/mK at 50°C down to 42 W/mK at 1000°C, values about twice as high as values for bare fiber.

The thermal conductivity of the sintered Tyranno™ SA fiber has previously been shown to depend quite sensitively on the final heat treatment temperature, which is expected to affect the fiber grain size and the surface roughness [6]. Possibly, the surface roughness is modified by the deposition of a well-bonded CVI-SiC matrix and the effective K_f-value in the composite is increased over that of the bare fiber. This possibility needs to be examined further, as one of the major goals in the SiC/SiC development for fusion applications is to improve K_{eff}. Increasing K_f during composite processing is one way to do that for composite with thermally well-coupled f/m components.

In Table II, according to the 3D-hierarchical model, the relative sensitivity of K_{eff} is given for a 20% change in each parameter listed in Table 1 taken one at a time while the values of the other parameters are held constant.

According to Table II, increasing (or decreasing) K_m- or K_f-values is most important for affecting a change in K_{eff}. Absolute K_m- or K_f-values are quite high for these composites; so increasing these values further would be quite difficult. However, decreasing these values is a distinct possibility in service due to the accumulation of irradiation-induced point defects. In addition, a decrease in h by orders of magnitude can occur because of f/m debonding due to irradiation-induced differential f/m swelling/shrinkage, in which case a relatively large decrease in K_{eff} would be expected. Nevertheless, the “c” sub-units for these 3D-composites with Z-fiber “heat-pipes” would not be subject to the f/m debonding form of thermal conductivity degradation. Therefore, it is reasonable to expect somewhat less degradation in overall K_{eff} for these 3D-composites compared to 2D-composites.

Table 2. Relative sensitivity of K_{eff} at 600° C for 20% change in each listed parameter

Parameter	Value at 600°C	Percent Effect
K_f (W/mK)	58.90	8.7 %
K_m (W/mK)	32.71	10.6 %
K_c (W/mK)	30.60	<0.2 %
t or a	See Table I	<0.2 %
f_p	0.52	1.8 %
P_a	0.090	1.2 %
P_b	0.210	3.6 %
β_b	5.6	2.3 %
f_{Mc} and f_{Fc}	0.440 and 0.513	3.5 %

Experimental Procedures

1. The thermal conductivity K_{eff} determined for a layered and Z-stitched 3D-Tyranno™ SA/PyC/ICVI-SiC composite was about x3 the K_{eff}-value for a conventional 2D-SiC/ICVI-SiC composite made with Hi-Nicalon™ fabric layers. In particular, for the 3D-composites with fiber content ratios X:Y:Z ~ 1:1:1.2, K_{eff}(T)-values ranged from 52 W/mK at 50°C down to about 22 W/mK at 1000°C.
2. 3D-H2L model predictions suggested that K_f(T)-values for the Tyranno™ SA fibers within an ICVI-SiC matrix are much higher than values observed for bare fiber. In the two composite versions examined here, K_f(T)-values appeared to range from about 130 W/mK at 50°C down to 42 W/mK at 1000°C.
3. 3D-H2L model predictions for K_m(T) ranged from 50 W/mK at 50°C down to 26 W/mK at 1000°C for both versions of 3D-SiC/ICVI-SiC. These values agree with K_m(T)-values predicted for the ICVI-SiC matrix for a 2D-Nicalon™ type S/PyC/ICVI-SiC composite within 5-10%.
4. Because the Z-stitch fiber "heat pipes" in a 3D-SiC/SiC composite are not subject to degradation of K_{eff} due to f/m debonding (thermal decoupling), it is reasonable to expect less susceptibility to radiation degradation of K_{eff} in 3D-composites compared to 2D-SiC/SiC composites.

Results

Model predictions will be carried out for 3D-Tyranno SA/ICVI-SiC composites after irradiation in the HFIR reactor at ORNL as part of the JUPITER 18J test series. Further analyses will be carried out to examine the possibility that for the Tyranno™ SA fiber K_f can effectively have higher values in a CVI-SiC composite than as a bare fiber.

References

[1] G. E. Youngblood, David J. Senor, and R. H. Jones, Modeling the transverse thermal conductivity of 2-D SiC_f/SiC composites made with woven fabric, Fus. Sci. Tech. 45 (2004) 583.

[2] G. E. Youngblood, D. J. Senor, and R. H. Jones, Optimizing the transverse thermal conductivity of 2D-SiC_f/SiC composites I. Modeling, J. Nucl. Mat. 307-311 (2002) 1112.

[3] R. Yamada, N. Igawa, and T. Taguchi, Thermal diffusivity/conductivity of Tyranno SA fiber- and Hi-Nicalon type S fiber-reinforced 3D-SiC/SiC composites, paper #P-230 presented at ICFRM-11, December 7-12, 2003, Kyoto, Japan, to be published in the Journal of Nuclear Materials (2004).

[4] D. J. Senor, G. E. Youngblood, D. V. Archer, and C. E. Chamberlin, Recent Progress in Thermal Conductivity Testing of SiC-Based Materials for Fusion Reactor Applications, in the *Proceedings of the 3rd IEA Workshop on SiC/SiC Ceramic Composites for Fusion Structural Applications*, Cocoa Beach, Fla., January 29-30, 1999, p. 102.

[5] G. E. Youngblood, D. J. Senor, and R. H. Jones, Thermal diffusivity/conductivity of irradiated Hi-Nicalon 2D-SiC/SiC composite, Fusion Materials Semiannual Progress Report for Period Ending June 30, 2003, DOE-ER-0313/34, p. 41.
[6] Tyranno, SA ref.