ASSEMBLY OF THE US-JAPAN JP-28 and JP-29 EXPERIMENTS AND START OF IRRADIATION IN THE HFIR—D. K. Felde, D. W. Heatherly, S. H. Kim, R. G. Sitterson, R. E. Stoller, and C. Wang (Oak Ridge National Laboratory), M. Ando and H. Tanigawa (Japan Atomic Energy Research Institute, Tokai, Japan)

OBJECTIVE

This work is being carried out under Annex I of the Collaboration on Fusion Materials between the U.S. DOE and the Japan Atomic Energy Research Institute. The JP-28 and JP-29 capsules are part of the Phase-IV experiments with the goal of elucidating the effects of helium in candidate engineering and model alloys, and verifying the irradiation response of alloy F82H. These two capsules will extend the irradiation to significantly higher levels than the previous capsules in this series, JP-26 and JP-27, with planned exposure to greater than 50 dpa.

SUMMARY

Assembly of the JP-28 and JP-29 capsules was completed during this reporting period. Irradiation began for JP-29 with cycle 403, starting January 26, 2005. Irradiation began for JP-28 with cycle 404, starting April 6, 2005. Both of the JP-28 and JP-29 experiments were installed in the target region of the HFIR. A detailed specimen loading list for both capsules is provided in this report.

PROGRESS AND STATUS

Introduction

These experiments are being carried out within the framework of the U.S. DOE-JAERI Collaboration on Fusion Materials, Annex I, which is in its fourth phase. The goals of the experiment include the investigation of the effects of helium on microstructural evolution, the impact of helium on fracture properties, and the development of engineering data on the fusion candidate alloy F82H. It is planned to irradiate these capsules for more than 30 cycles, significantly longer than the 5 and 13 cycles planned for the JP-26 and JP-27 capsules, respectively. This report provides a description of the final design and a detailed list of specimens loaded into the JP-28 and JP-29 capsules.

Description of JP-28 Capsule

The JP-28 capsule includes 14 specimen holders designed to accommodate 6 types of specimens and irradiate them at 3 temperatures, 300, 400, and 500°C. The specimen types are a small bend bar [deformation-fracture mini-beam (DFMB)], a sheet tensile specimen (SS-J3), a subsized pre-cracked Charpy V-notch specimen (M3-PCCVN), transmission electron microscopy disks (TEM), atom probe specimens (APFIM), and disk compact tension (DCT) specimens.

An overall layout of the JP-28 experiment is shown in Table 1, which provides the holder position number, the specimen type being irradiated in that position, the design irradiation temperature, and the distance that the center of the holder is from the HFIR horizontal mid-plane (HMP).

Each of the specimen holders, with the exception of the DCTs, is fabricated from oxide dispersion strengthened aluminum (DISPAL). The outside diameters of the specimen holders are sized to provide a precise helium-filled gas gap between the holder and the capsule housing tube necessary to achieve the desired irradiation temperature. Centering tabs, six at each end, are machined into the holders to help assure uniform gas gaps. The inner part of the specimen holder is machined to accommodate the type of specimens being irradiated, and therefore each has a unique geometry. Silicon carbide (SiC) passive temperature monitors are included in each specimen holder. These will be analyzed after irradiation to determine actual irradiation temperature. The DCTs do not use a holder, but are sized to provide the appropriate gas gap.

Table 1. Layout of the JP-28 experiment

Position Number	Specimen Type	Design Temp. (°C)	Distance Above HMP* (in.)
1	SS-J3, APFIM	400	8.758
2	M3-PCCVN	500	7.263
3	SS-J3, APFIM	300	5.767
4	DCT	300	4.437
5	M3-PCCVN	300	3.030
6	DCT	400	1.499
7	SS-J3, APFIM	400	0.169
8	DCT	400	-1.161
9	SS-J3, APFIM	500	-2.614
10	DFMB	300	-3.944
11	M3-PCCVN	300	-5.229
12	M3-PCCVN	300	-6.679
13	M3-PCCVN	300	-8.129
14	TEM	300	-9.130

*HMP – Horizontal mid-plane

A top view and axial cross section of the specimen holders used to irradiate TEM specimens is shown in Fig. 1 (all dimensions in Figs. 1 through 4 are in inches unless otherwise noted). A total of 100 (0.010 in. thick) specimens can be accommodated in these holders along with a single SiC temperature monitor located at the center of the holder. To help identify in which hole the specimens are located, a 0.040-in. diameter by 0.040-in. deep hole was drilled in the top of each TEM holder, and the specimen holes are numbered clockwise starting at this 0.040-in. hole.

The loading configuration for the tensile specimen holders is shown in Fig. 2. Eight SS-J3 tensile and eight APFIM specimens can be accommodated per layer, with two layers per holder. A spring pin is placed in the center of the specimen array to apply pressure to the SiC temperature monitors and, in turn, on the tensile specimens to assure good thermal contact with the specimen holder. At each corner, two APFIM “tuning fork” specimens are loaded with a corrugated spring to assure that they are also in good thermal contact with the holder.

Subsized pre-cracked Charpy V-notch specimens (M3-PCCVN) are loaded into specimen holders shown in Fig. 3. Each of these holders has a total of 8 specimens. Two SiC temperature monitors and corrugated springs are placed in the center of the specimen array to assure good thermal contact with the holder. The M5-PCCVN specimens in the JP-29 capsule use a similar holder except that the length is increased from 36.2 mm (1.427 inches) to 54.2 mm (2.135 inches).

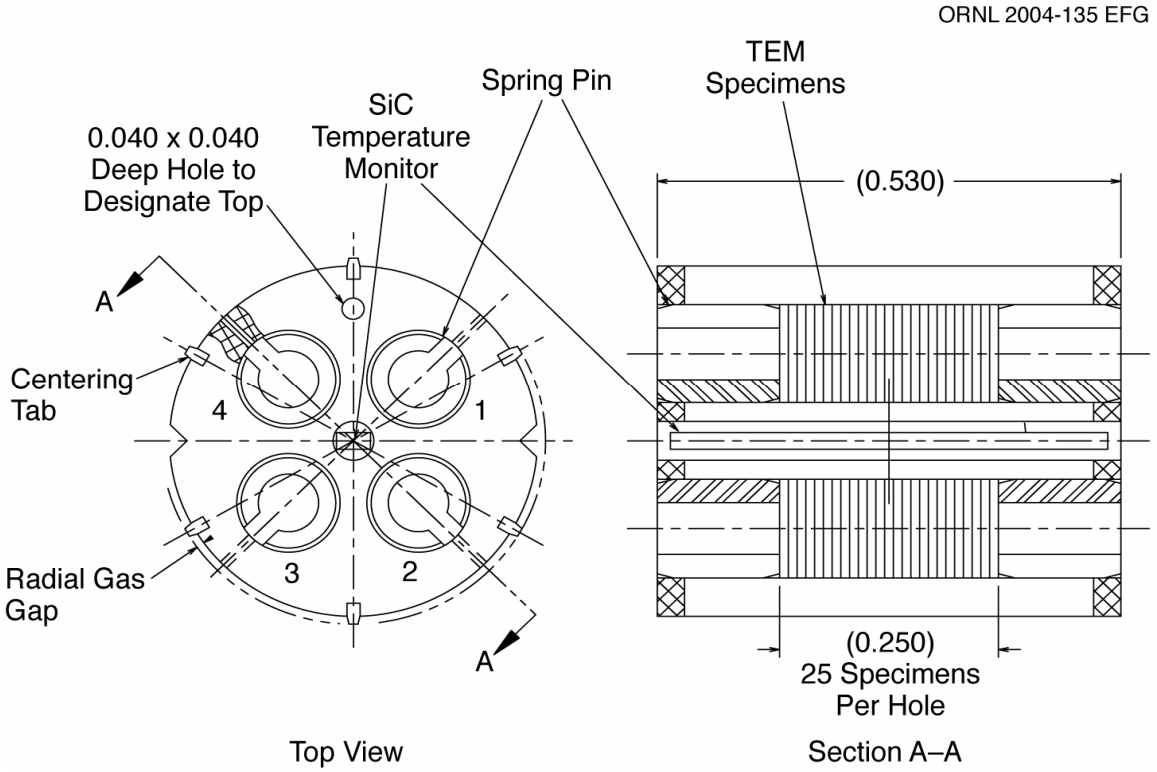

Fig 1. Specimen holder subassembly used for TEM specimens.

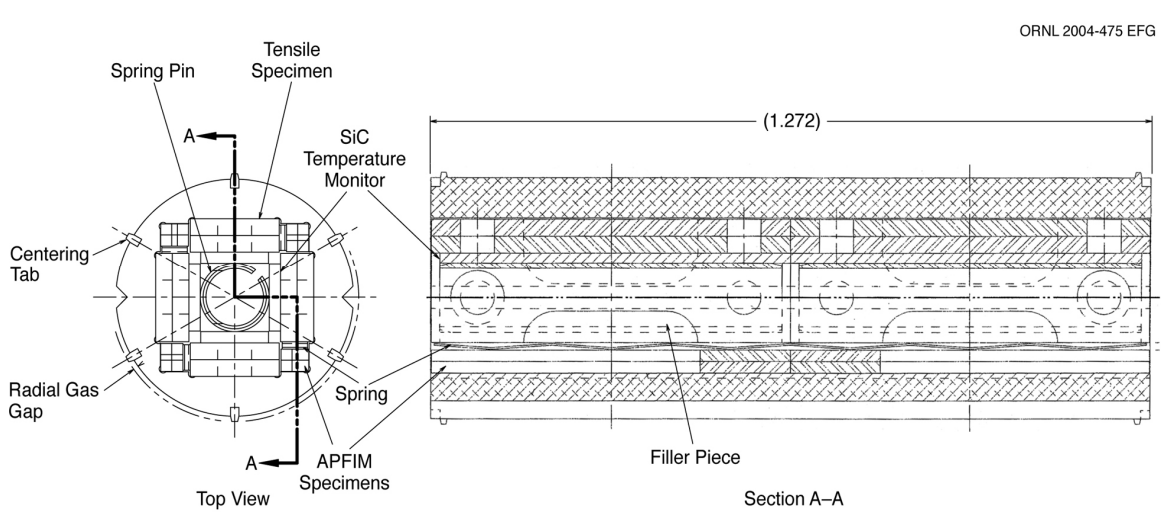

Fig. 2. Specimen holder subassembly used for SS-J3 tensile and APFIM specimens.

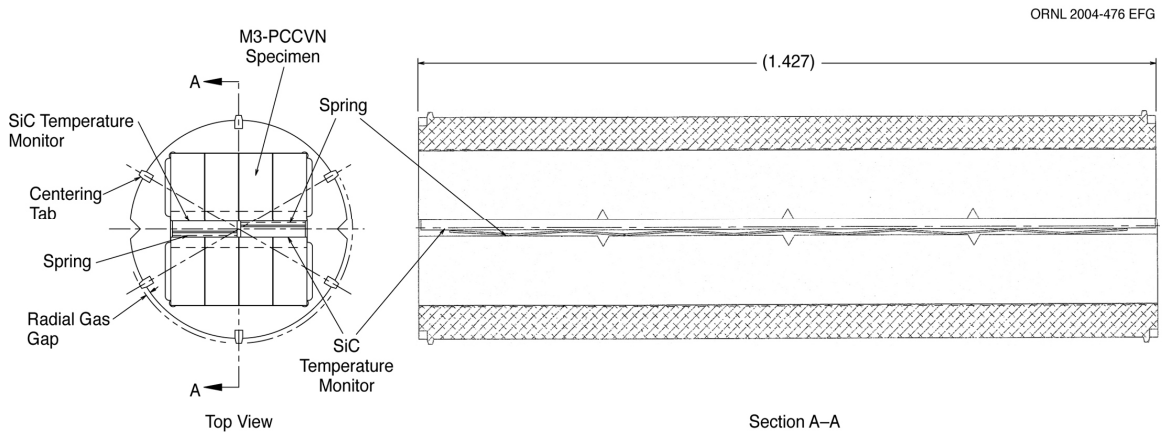

Fig. 3. Specimen holder subassembly used for M3-PCCVN specimens.

The DFMB specimens are loaded into the holders as shown in Fig. 4. There are three layers of specimens with 16 specimens at each level. The outer row of each layer is made up of 12 specimens that are 1.68 mm square, while the inner four specimens are either 0.40 x 3.3 mm or 0.890 x 3.3 mm. A SiC temperature monitor and a corrugated spring are placed in the center of the specimen array, and two corrugated springs are placed in two of the outer rows to assure all specimens are in good thermal contact with the holder. Specimen locations are designated by a C, S, TM, M1, or M2, to more precisely identify loading locations (see loading list).

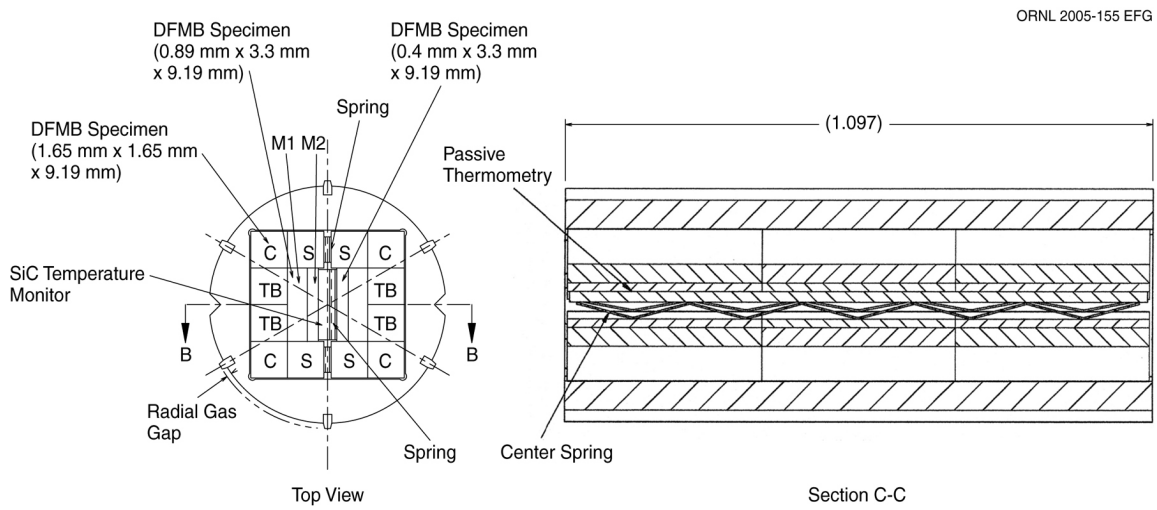

Fig. 4. Specimen holder subassembly used for DFMB specimens.

A drawing of the DCT specimen configuration is shown in Fig. 5. Pins are inserted through the holes in a set of nine specimens. A retainer clip slides onto the flats on the pin ends to hold the specimens together. The diameter of the specimen determines the gas gap for temperature control.

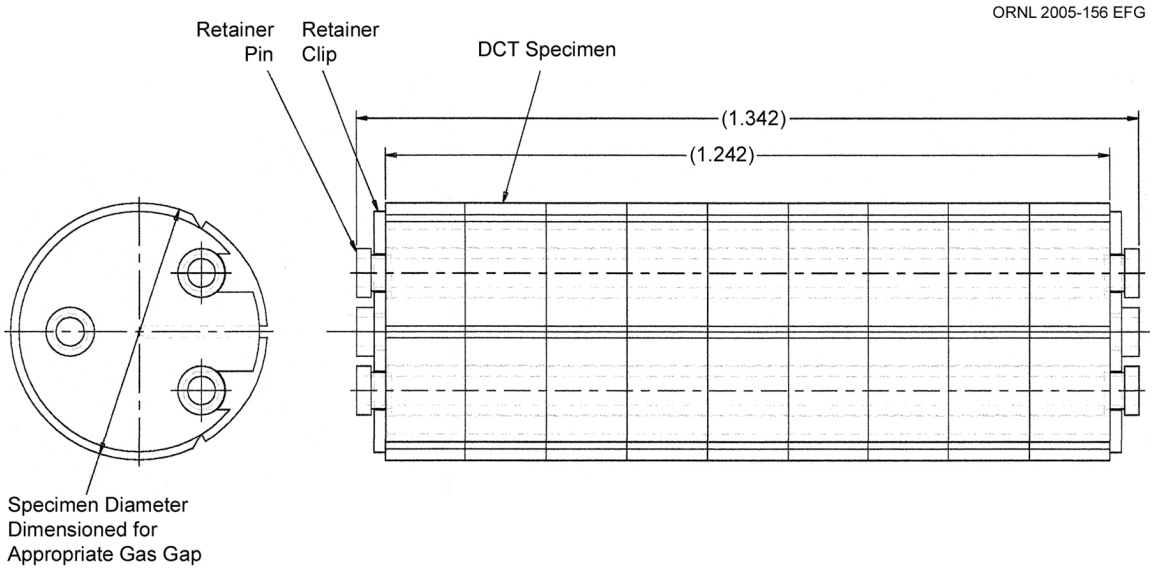

Fig. 5. DCT specimen assembly.

Specimen Loading

The location of each of the specimens in JP-28 is reported in Table 2, which contains a box for each of the 14 specimen holder and 5 dosimeter positions. Because coatings applied to some of the TEM discs required the discs to be loaded in a prescribed manner, the boxes for the TEM specimen holder (position 14) has a column labeled “Engr. Face” to indicate which way the engraved face of the specimen was loaded (if applicable). A total of five neutron dosimeter packages provided by PNNL were loaded into JP-28, one each between positions 1 and 2, 2and 3, 5 and 6, 9 and 10, and below position 14. The M3-PCCVN specimens (in positions 2, 5, 11, 12, and 13) were all loaded with the notches facing towards the center of the holders. The outer rows of specimens in the DFMB holder (position 10) were loaded with the notches facing outward toward the holder, while the inner four specimens were loaded with their notches facing inward toward the center of the holder.

Table 2. JP-28 specimen and dosimetry loading list

POS. 1 JP-28	SS-J3 Tensile Specimen	APFIM Specimen	Passive Thermometry
Top Half	1. inner **ZP70**	1. **ZS74**	1. Ser. # N/A
	2. outer **ZQ70**	2. **ZS78**	
	3. inner **ZP71**	3. **ZS75**	2. Ser. # N/A
	4. outer **ZQ71**	4. **ZS79**	
	5. inner **ZP72**	5. **ZS76**	3. Ser. # N/A
	6. outer **ZQ72**	6. **372**	
	7. inner **ZR70**	7. **ZS77**	4. Ser. # N/A
	8. outer **ZR71**	8. **373**	
Bottom Half	SS-J3 Tensile Specimen	APFIM Specimen	Passive Thermometry
	9. inner **770**	9. **773**	5. Ser. # N/A
	10. outer **870**	10. **873**	
	11. inner **771**	11. **774**	6. Ser. # N/A
	12. outer **871**	12. **874**	
	13. inner **772**	13. **777**	7. Ser. # N/A
	14. outer **872**	14. **877**	
	15. inner **R70**	15. **778**	8. Ser. # N/A
	16. outer **R71**	16. **878**	

The spacer between positions number 1 and 2 contains Neutron Dosimeter Number ____K____

POS. 2 JP-28	M3-PCCVN Spec.	Passive Thermometry	
	1. outer **782**	1. Ser. # 1	2. Ser. # 2
	2. inner **882**		
	3. inner **883**		
	4. outer **783**		
	5. outer **784**		
	6. inner **884**		
	7. inner **885**		
	8. outer **785**		

The spacer between positions number 2 and 3 contains Neutron Dosimeter Number ____H____

POS. 3 JP-28	SS-J3 Tensile Specimen	APFIM Specimen	Passive Thermometry
Top Half	1. inner **760**	1. **769**	1. Ser. # N/A
	2. outer **J60**	2. **76b**	
	3. inner **761**	3. **76a**	2. Ser. # N/A
	4. outer **J61**	4. **76c**	
	5. inner **762**	5. **76f**	3. Ser. # N/A
	6. outer **J62**	6. **76d**	
	7. inner **763**	7. **76g**	4. Ser. # N/A
	8. outer **J63**	8. **76e**	
Bottom Half	SS-J3 Tensile Specimen	APFIM Specimen	Passive Thermometry
	9. inner **860**	9. **869**	5. Ser. # N/A
	10. outer **XE60**	10. **86b**	
	11. inner **861**	11. **86a**	6. Ser. # N/A
	12. outer **XE61**	12. **86c**	
	13. inner **862**	13. **86f**	7. Ser. # N/A
	14. outer **XE62**	14. **86d**	
	15. inner **863**	15. **86g**	8. Ser. # N/A
	16. outer **XE63**	16. **86e**	

POS. 4 JP-28	DCT Spec.	Passive Thermometry
	1. **H6A**	Ser. # 1
	2. **H6B**	
	3. **H6C**	
	4. **H6D**	
	5. **H6E**	
	6. **H6F**	
	7. **H6G**	
	8. **H6H**	
	9. **H6J**	

POS. 5 JP-28	M3-PCCVN Spec.	Passive Thermometry	
	1. outer **566**	1. Ser. # 3	2. Ser. # 4
	2. inner **666**		
	3. inner **667**		
	4. outer **567**		
	5. outer **568**		
	6. inner **668**		
	7. inner **669**		
	8. outer **569**		

The spacer between positions number 5 and 6 contains Neutron Dosimeter Number U8

POS. 6 JP-28	DCT Spec.	Passive Thermometry
	1. **H76**	Ser. # 2
	2. **H77**	
	3. **H78**	
	4. **H79**	
	5. **H7A**	
	6. **H7B**	
	7. **H7C**	
	8. **H7D**	
	9. **H7E**	

POS. 7 JP-28	SS-J3 Tensile Specimen	APFIM Specimen	Passive Thermometry
Top Half	1. inner **570**	1. **576**	1. Ser. # N/A
	2. outer **070**	2. **07F**	
	3. inner **571**	3. **577**	2. Ser. # N/A
	4. outer **071**	4. **07G**	
	5. inner **572**	5. **370**	3. Ser. # N/A
	6. outer **072**	6. **06RC**	
	7. inner **573**	7. **374**	4. Ser. # N/A
	8. outer **073**	8. **06Rd**	
Bottom Half	SS-J3 Tensile Specimen	APFIM Specimen	Passive Thermometry
	9. inner **670**	9. **676**	5. Ser. # N/A
	10. outer **H70**	10. **H7Ja**	
	11. inner **671**	11. **677**	6. Ser. # N/A
	12. outer **H71**	12. **H7Jb**	
	13. inner **672**	13. **371**	7. Ser. # N/A
	14. outer **H72**	14. **H7K**	
	15. inner **673**	15. **375**	8. Ser. # N/A
	16. outer **H73**	16. **H7M**	

POS. 8 JP-28	DCT Spec.	Passive Thermometry
	1. **076**	Ser. # 3
	2. **077**	
	3. **078**	
	4. **079**	
	5. **07A**	
	6. **07B**	
	7. **07C**	
	8. **07D**	
	9. **07E**	

POS. 9 JP-28	SS-J3 Tensile Specimen	APFIM Specimen	Passive Thermometry
Top Half	1. inner **580**	1. **586**	1. Ser. # N/A
	2. outer **080**	2. **08H**	
	3. inner **581**	3. **587**	2. Ser. # N/A
	4. outer **081**	4. **0HJ**	
	5. inner **582**	5. **380**	3. Ser. # N/A
	6. outer **082**	6. **06Re**	
	7. inner **583**	7. **382**	4. Ser. # N/A
	8. outer **083**	8. **06Rf**	
Bottom Half	SS-J3 Tensile Specimen	APFIM Specimen	Passive Thermometry
	9. inner **680**	9. **686**	5. Ser. # N/A
	10. outer **H80**	10. **H86**	
	11. inner **681**	11. **687**	6. Ser. # N/A
	12. outer **H81**	12. **H87**	
	13. inner **682**	13. **381**	7. Ser. # N/A
	14. outer **H82**	14. **H88**	
	15. inner **683**	15. **383**	8. Ser. # N/A
	16. outer **H83**	16. **H89**	

The spacer between positions number 9 and 10 contains Neutron Dosimeter Number 18

POS. 10 JP-28	Outer Layer DFMB Specimens (.065 x .065 x .362)												Inner Layer DFMB (.035 x.130x.362)		Inner Layer DFMB (.0157 x.130x.362)		Passive Therm.
	C	C	C	C	S	S	S	S	TB	TB	TB	TB	M1	M1	M2	M2	
	1	2	3	4	5	6	7	8	9	10	11	12	1	2	1	2	1.
Row 1 **TOP**	**06Ka**	**06Kb**	**H6Ka**	**H6Kb**	**06Kg**	**06Kh**	**H6Kg**	**H6Kh**	**06Kp**	**06Kq**	**H6Kp**	**H6Kq**	**R6E**	**R6F**	**06Sa**	**364**	Ser. # 1
Row 2 **MIDDLE**	**06Kc**	**06Kd**	**H6Kc**	**H6Kd**	**06Kj**	**06Kk**	**H6Kj**	**H6Kk**	**06Kr**	**06Ks**	**H6Kr**	**H6Ks**	**R6G**	**06Ta**	**H6T**	**56E**	
Row 3 **BOTTOM**	**06Ke**	**06Kf**	**H6Ke**	**H6Kf**	**06Km**	**06Kn**	**H6Km**	**H6Kn**	**06Kt**	**06Ku**	**06Kv**	**06Kw**	**366**	**H6V**	**66E**	**96a**	

POS. 11 JP-28	M3-PCCVN Spec.		Passive Thermometry	
	1. outer	**J64**	1.	2.
	2. inner	**XE66**		
	3. inner	**XE67**		
	4. outer	**J65**	Ser. # 5	Ser. # 6
	5. outer	**J66**		
	6. inner	**XE68**		
	7. inner	**XE69**		
	8. outer	**J67**		

POS. 12 JP-28	M3-PCCVN Spec.		Passive Thermometry	
	1. outer	**Q64**	1.	2.
	2. inner	**E64**		
	3. inner	**E65**		
	4. outer	**Q65**	Ser. # 7	Ser. # 8
	5. outer	**Q66**		
	6. inner	**E66**		
	7. inner	**E67**		
	8. outer	**Q67**		

POS. 13 JP-28	M3-PCCVN Spec.		Passive Thermometry	
	1. outer	**UA64**	1.	2.
	2. inner	**R63**		
	3. inner	**R64**		
	4. outer	**UA65**	Ser. # 9	Ser. # 10
	5. outer	**UA66**		
	6. inner	**R65**		
	7. inner	**R66**		
	8. outer	**UA67**		

POS. 14 JP-28	TEM Specimen Numbers									Passive Thermometry in Center Hole
		Hole No.1*	Engr. Face	Hole No.2*	Engr. Face	Hole No.3*	Engr. Face	Hole No.4*	Engr. Face	
Bottom	1	**ZS63**	up	**ZQ63**	down	**ZS61**	down	**ZH61**		
	2	**066**	down	**ZZ62**	up	**062**	down	**ZJ60**		Ser. # 1
	3	**ZA65**	up	**ZR62**	down	**UN62**	up	**ZJ61**		
	4	**067**	down	**ZZ63**	up	**063**	down	**ZK60**		
	5	**ZF66**	up	**ZR63**	down	**UN63**	up	**ZK61**		
	6	**H66**	down	**ZP66**	up	**H62**	down	**ZZ60**		
	7	**UN66**	up	**ZS62**	down	**ZA62**	up	**ZZ61**		
	8	**H67**	down	**ZP67**	up	**H63**	down	**860**		
	9	**UN67**	up	**064**	down	**ZF62**	up	**861**		
	10	**R66**	down	**ZA64**	up	**R62**	down	**760**		
	11	**ZF67**	up	**065**	down	**ZF63**	up	**761**		
	12	**R67**	down	**ZF64**	up	**R63**	down	**ZS60**		
	13	**ZH62**	up	**H64**	down	**ZP62**	up	**ZA60**		
	14	**ZG62**	down	**UN65**	up	**061**		**ZA61**		
	15	**ZJ62**	up	**H65**	down	**360**		**ZP60**		
	16	**ZG63**	down	**UN64**	up	**361**		**ZP61**		
	17	**ZJ63**	up	**H78**	down	**H60**		**ZB60**		
	18	**ZG64**	down	**ZP64**	up	**H61**		**ZB61**		
	19	**ZJ64**	up	**R64**	down	**R60**		**ZC60**		
	20	**ZH63**	down	**ZA63**	up	**R61**		**ZC61**		
	21	**ZK62**	up	**R65**	down	**UN60**		**ZD60**		
	22	**ZH64**	down	**ZF65**	up	**UN61**		**ZD61**		
	23	**ZK63**	up	**ZG65**	down	**ZG60**		**ZE60**		
	24	**ZQ62**	down	**ZP65**	up	**ZG61**		**ZE61**		
	25	**ZK64**	up	**060**		**ZH60**		**ZF60**		
	26			**863**		**762**		**ZF61**		
TOP	27			**862**		**763**		**ZQ60**		
	28							**ZQ61**		
	29							**ZR64**		
	30							**ZR65**		
	31									

The spacer at the bottom of position number 14 contains Neutron Dosimeter Number __7J____

Description of JP-29 Capsule

The JP-29 capsule includes 14 specimen holders designed to accommodate 7 types of specimens and irradiate them at 3 temperatures, 300, 400, and 500°C. The specimen types are a small bend bar (deformation-fracture mini-beam, DFMB), a sheet tensile specimen (SS-J3), subsized pre-cracked Charpy V-notch specimens (M3-PCCVN and M5-PCCVN), transmission electron microscopy disks (TEM), atom probe specimens (APFIM), and disk compact tensile (DCT) specimens.

An overall layout of the JP-29 capsule is shown in Table 3, which provides the holder position number, the specimen type being irradiated in that position, the design irradiation temperature, and the distance that the center of the holder is from the HFIR horizontal mid-plane (HMP).

The holder types in the JP-29 capsule are similar to those described for JP-28, with the addition of the M5-PCCVN holder. The M5-PCCVN specimens have two additional V-notches as compared to the M3-PCCVN specimens and are correspondingly longer. Additionally, to minimize bending of the specimens due to the pre-cracking procedure, two of the five V-notches are located on opposite sides of the specimen in alternating positions. The M5-PCCVN holder is 54.2 mm (2.135 inches) long compared to the M3-PCCVN holder that is 36.2 mm (1.427 inches) long. Other features are the same as shown in Fig. 3.

Table 3. Layout of the JP-29 experiment

Position Number	Specimen Type	Design Temp. (□C)	Distance Above HMP* (in.)
1	TEM	400	9.381
2	SS-J3, APFIM	400	8.457
3	SS-J3, APFIM	500	7.039
4	DFMB	300	5.709
5	DCT	300	4.467
6	M3-PCCVN	300	3.060
7	SS-J3, APFIM	300	1.687
8	M5-PCCVN	400	-0.163
9	M5-PCCVN	500	-2.445
10	SS-J3, APFIM	300	-4.295
11	M3-PCCVN	300	-5.668
12	SS-J3, APFIM	300	-7.040
13	SS-J3, APFIM	300	-8.335
14	TEM	500	-9.382

*HMP – Horizontal mid-plane

Specimen Loading

The location of each of the specimens in JP-29 is reported in Table 4, which contains a box for each of the 14 specimen holder and 5 dosimeter positions. Because coatings applied to some of the TEM discs require the discs to be loaded in a prescribed manner, the boxes for the TEM specimen holders (positions 1 and 14) has a column labeled “Engr. Face” to indicate which way the engraved face of the specimen was loaded (if applicable). A total of five neutron dosimeter packages provided by PNNL were loaded into JP-29, one each between positions 2 and 3, 3 and 4, 8 and 9, 9 and 10, and below position 14. The M3-PCCVN and M5-PCCVN specimens (in positions 6, 8, 9, and 11) were all loaded with the notches facing towards the center of the holders. The outer rows of specimens in the DFMB holder (position 4) were loaded with the notches facing outward toward the holder, while the inner four specimens were loaded with their notches facing inward toward the center of the holder.

Future Work

The JP-28 and -29 capsules will be irradiated to a peak fluence of ~ 54 dpa, which will take approximately 30 HFIR cycles.

Table 4. JP-29 specimen and dosimetry loading list

POS. 1 JP-29	TEM Specimen Numbers									Passive Thermometry in Center Hole
		Hole No.1*	Engr. Face	Hole No.2*	Engr. Face	Hole No.3*	Engr. Face	Hole No.4*	Engr. Face	
	1	**ZS73**	up	**ZQ72**	down	**072**	down	**ZH70**		Ser. # 2
	2	**076**	down	**ZZ72**	up	**UN72**	up	**ZH71**		
	3	**ZA75**	up	**ZQ73**	down	**073**	down	**ZJ70**		
	4	**077**	down	**ZZ73**	up	**UN73**	up	**ZJ71**		
	5	**ZF76**	up	**ZR72**	down	**H72**	down	**ZK70**		
	6	**H76**	down	**ZP76**	up	**ZA72**	up	**ZK71**		
	7	**UN76**	up	**ZR77**	down	**H73**	down	**ZZ70**		
	8	**H77**	down	**ZP77**	up	**ZF72**	up	**ZZ71**		
	9	**UN77**	up	**074**	down	**R72**	down	**870**		
	10	**R76**	down	**ZA73**	up	**ZF73**	up	**871**		
	11	**ZF77**	up	**075**	down	**R73**	down	**770**		
	12	**R77**	down	**ZF74**	up	**ZP72**	up	**771**		
	13	**ZH72**	up	**H74**	down	**ZS71**	down	**ZS74**		
	14	**ZG72**	down	**UN74**	up	**ZP73**	up	**ZB70**		
	15	**ZJ72**	up	**H75**	down	**071**		**ZB71**		
	16	**ZG73**	down	**UN75**	up	**370**		**ZC70**		
	17	**ZJ73**	up	**R74**	down	**371**		**ZC71**		
	18	**ZG74**	down	**ZA74**	up	**H70**		**ZD70**		
	19	**ZJ74**	up	**R75**	down	**H71**		**ZD71**		
	20	**ZH73**	down	**ZF75**	up	**R70**		**ZE70**		
	21	**ZK72**	up	**ZG75**	down	**R71**		**ZE71**		
	22	**ZS72**	down	**ZP74**	up	**UN70**		**ZF70**		
	23	**ZK73**	up	**ZQ74**	down	**UN71**		**ZF71**		
	24	**ZH74**	down	**ZP75**	up	**ZG70**		**ZA70**		
	25	**ZK74**	up	**070**		**ZG71**		**ZA71**		
	26			**872**		**772**		**ZP70**		
	27			**873**		**773**		**ZP71**		
	28							**ZQ70**		
	29							**ZQ71**		
	30							**ZR74**		
	31							**ZR74**		

POS. 2 JP-29	SS-J3 Tensile Specimen	APFIM Specimen	Passive Thermometry
Top Half	1. inner **XG70**	1. **UA70**	1. Ser. # N/A
	2. outer **XF70**	2. **R72**	
	3. inner **XG71**	3. **UA71**	2. Ser. # N/A
	4. outer **XF71**	4. **R73**	
	5. inner **XG72**	5. **UA74**	3. Ser. # N/A
	6. outer **XF72**	6. **R74**	
	7. inner **XE70**	7. **UA75**	4. Ser. # N/A
	8. outer **XE71**	8. **R75**	
Bottom Half	SS-J3 Tensile Specimen	APFIM Specimen	Passive Thermometry
	9. inner **H7F**	9. **UA72**	5. Ser. # N/A
	10. outer **J70**	10. **775**	
	11. inner **H7G**	11. **UA73**	6. Ser. # N/A
	12. outer **J71**	12. **776**	
	13. inner **H7H**	13. **H7Jc**	7. Ser. # N/A
	14. outer **J72**	14. **875**	
	15. inner **XE72**	15. **H7Jd**	8. Ser. # N/A
	16. outer **XE73**	16. **876**	

The spacer between positions number 2 and 3 contains Neutron Dosimeter Number J8

POS. 3 JP-29	SS-J3 Tensile Specimen	APFIM Specimen	Passive Thermometry
Top Half	1. inner **K80**	1. **787**	1. Ser. # N/A
	2. outer **R80**	2. **R82**	
	3. inner **K81**	3. **789**	2. Ser. # N/A
	4. outer **R81**	4. **R83**	
	5. inner **K82**	5. **887**	3. Ser. # N/A
	6. outer **ZP80**	6. **UA80**	
	7. inner **K83**	7. **889**	4. Ser. # N/A
	8. outer **ZP81**	8. **UA81**	
Bottom Half	SS-J3 Tensile Specimen	APFIM Specimen	Passive Thermometry
	9. inner **ZQ80**	9. **ZS84**	5. Ser. # N/A
	10. outer **780**	10. **786**	
	11. inner **ZQ81**	11. **ZS85**	6. Ser. # N/A
	12. outer **781**	12. **788**	
	13. inner **ZR80**	13. **ZS86**	7. Ser. # N/A
	14. outer **880**	14. **886**	
	15. inner **ZR81**	15. **ZS87**	8. Ser. # N/A
	16. outer **881**	16. **888**	

The spacer between positions number 3 and 4 contains Neutron Dosimeter Number 10

POS. 4 JP-29	Outer Layer DFMB Specimens (.065 x .065 x .362)												Inner Layer DFMB .035 x.130x.362		Inner Layer DFMB .0157 x.130x.362		Passive Therm.
	C	C	C	C	S	S	S	S	TB	TB	TB	TB	M1	M1	M2	M2	
	1	2	3	4	5	6	7	8	9	10	11	12	1	2	1	2	1.
Row 1 **TOP**	**768a**	**768b**	**868a**	**868b**	**768c**	**768d**	**868c**	**868d**	**768e**	**768f**	**868e**	**868f**	**R6H**	**R6J**	**06sb**	**365**	Ser. #2
Row 2 **MIDDLE**	**768g**	**768h**	**868g**	**868h**	**768j**	**768k**	**868j**	**868k**	**768m**	**768n**	**868m**	**868n**	**R6K**	**06Tb**	**H6U**	**56F**	
Row 3 **BOTTOM**	**768p**	**768q**	**868p**	**868q**	**768r**	**768s**	**868r**	**868s**	**768t**	**768u**	**868t**	**868u**	**367**	**H6W**	**66F**	**96b**	

POS. 5 JP-29	DCT Spec.	Passive Thermometry
	1. **06A**	Ser. # 4
	2. **06B**	
	3. **06C**	
	4. **06D**	
	5. **06E**	
	6. **06F**	
	7. **06G**	
	8. **06H**	
	9. **06J**	

POS. 6 JP-29	M3-PCCVN Spec.	Passive Thermometry	
	1. outer **066**	1.	2.
	2. inner **H66**		
	3. inner **H67**		
	4. outer **067**	Ser. # 11	Ser. # 12
	5. outer **068**		
	6. inner **H68**		
	7. inner **H69**		
	8. outer **069**		

POS. 7 JP-29	SS-J3 Tensile Specimen	APFIM Specimen	Passive Thermometry
Top Half	1. inner **560**	1. **56A**	1. Ser. # N/A
	2. outer **060**	2. **06Qa**	
	3. inner **561**	3. **56B**	2. Ser. # N/A
	4. outer **061**	4. **06Qb**	
	5. inner **562**	5. **56C**	3. Ser. # N/A
	6. outer **062**	6. **06Ra**	
	7. inner **563**	7. **56D**	4. Ser. # N/A
	8. outer **063**	8. **06Rb**	
Bottom Half	SS-J3 Tensile Specimen	APFIM Specimen	Passive Thermometry
	9. inner **660**	9. **66A**	5. Ser. # N/A
	10. outer **H60**	10. **H6Qa**	
	11. inner **661**	11. **66B**	6. Ser. # N/A
	12. outer **H61**	12. **H6Qb**	
	13. inner **662**	13. **66C**	7. Ser. # N/A
	14. outer **H62**	14. **H6R**	
	15. inner **663**	15. **66D**	8. Ser. # N/A
	16. outer **H63**	16. **H6S**	

POS. 8 JP-29	M5-PCCVN Spec.	Passive Thermometry	
	1. outer **074**	1. Ser. # 1	2. Ser. # 2
	2. inner **H74**		
	3. inner **H75**		
	4. outer **075**		
	5. outer **574**		
	6. inner **674**		
	7. inner **675**		
	8. outer **575**		

The spacer between positions number 8 and 9 contains Neutron Dosimeter Number __5U____

POS. 9 JP-29	M5-PCCVN Spec.	Passive Thermometry	
	1. outer **084**	1. Ser. # 3	2. Ser. # 4
	2. inner **H84**		
	3. inner **H85**		
	4. outer **085**		
	5. outer **584**		
	6. inner **684**		
	7. inner **685**		
	8. outer **585**		

The spacer between positions number 9 and 10 contains Neutron Dosimeter Number __EA____

POS. 10 JP-29	SS-J3 Tensile Specimen	APFIM Specimen	Passive Thermometry
Top Half	1. inner **064**	1. **06Qc**	1. Ser. # N/A
	2. outer **564**	2. **360**	
	3. inner **065**	3. **06Qd**	2. Ser. # N/A
	4. outer **565**	4. **361**	
	5. inner **H64**	5. **H6Qc**	3. Ser. # N/A
	6. outer **664**	6. **362**	
	7. inner **H65**	7. **H6Qd**	4. Ser. # N/A
	8. outer **665**	8. **363**	
Bottom Half	SS-J3 Tensile Specimen	APFIM Specimen	Passive Thermometry
	9. inner **S60,* S61*** 10. outer **FA11***	9. **06Qe** 10. **962**	5. Ser. # N/A
	11. inner **06M**	11. **06Qf**	6. Ser. # N/A
	12. outer **H6M**	12. **963**	
	13. inner **06N**	13. **960**	7. Ser. # N/A
	14. outer **H6N**	14. **968**	
	15. inner **06P**	15. **961**	8. Ser. # N/A
	16. outer **H6P**	16. **969**	

*Specimens # S60, S61, and FA11 were SS-J2 type specimens which are only 0.020” thick and 3 were required to occupy the space of the normal 2 each SS-J3 specimens which are 0.030” thick.

POS. 11 JP-28	M3-PCCVN Spec.	Passive Thermometry	
	1. outer **764**	1. Ser. # 13	2. Ser. # 14
	2. inner **864**		
	3. inner **865**		
	4. outer **765**		
	5. outer **766**		
	6. inner **866**		
	7. inner **867**		
	8. outer **767**		

POS. 12 JP-29	SS-J3 Tensile Specimen	APFIM Specimen	Passive Thermometry
Top Half	1. inner **Q60**	1. **UA66**	1. Ser. # N/A
	2. outer **E60**	2. **964**	
	3. inner **Q61**	3. **UA67**	2. Ser. # N/A
	4. outer **E61**	4. **965**	
	5. inner **Q62**	5. **UA68**	3. Ser. # N/A
	6. outer **E62**	6. **966**	
	7. inner **Q63**	7. **UA69**	4. Ser. # N/A
	8. outer **E63**	8. **967**	
Bottom Half	SS-J3 Tensile Specimen	APFIM Specimen	Passive Thermometry
	9. inner **UA60**	9. **UA64**	5. Ser. # N/A
	10. outer **R60**	10. **R67**	
	11. inner **UA61**	11. **UA65**	6. Ser. # N/A
	12. outer **R61**	12. **R68**	
	13. inner **UA62**	13. **UA6a**	7. Ser. # N/A
	14. outer **R62**	14. **R6C**	
	15. inner **UA63**	15. **UA6b**	8. Ser. # N/A
	16. outer **ZP60**	16. **R6D**	

POS. 13 JP-29	SS-J3 Tensile Specimen	APFIM Specimen	Passive Thermometry
Top Half	1. inner **ZP61**	1. **ZS64**	1. Ser. # N/A
	2. outer **ZQ62**	2. **ZS68**	
	3. inner **ZP62**	3. **ZS65**	2. Ser. # N/A
	4. outer **ZR60**	4. **ZS69**	
	5. inner **ZQ60**	5. **ZS66**	3. Ser. # N/A
	6. outer **ZR61**	6. **ZS6A**	
	7. inner **ZQ61**	7. **ZS67**	4. Ser. # N/A
	8. outer **ZR62**	8. **ZS7A**	
Bottom Half	SS-J3 Tensile Specimen	APFIM Specimen	Passive Thermometry
	9. inner **XF60**	9. **R69**	5. Ser. # N/A
	10. outer **XG60**	10. **R6C**	
	11. inner **XF61**	11. **R6A**	6. Ser. # N/A
	12. outer **XG61**	12. **R6D**	
	13. inner **XF62**	13. **R6B**	7. Ser. # N/A
	14. outer **XG62**	14. **R6E**	
	15. inner **XE64**	15. **ZS88**	8. Ser. # N/A
	16. outer **XE65**	16. **ZS89**	

POS. 14 JP-29	TEM Specimen Numbers									Passive Thermometry in Center Hole
		Hole No.1*	Engr. Face	Hole No.2*	Engr. Face	Hole No.3*	Engr. Face	Hole No.4*	Engr. Face	
Bottom	1	**ZS83**	up	**ZQ83**	down	**082**	down	**ZH80**		
	2	**086**	down	**ZZ82**	up	**ZA82**	up	**ZH81**		
Top	3	**ZA85**	up	**ZR82**	down	**083**	down	**ZJ80**		
	4	**087**	down	**ZZ83**	up	**ZF82**	up	**ZJ81**		Ser. # 3
	5	**ZF86**	up	**ZR83**	down	**H82**	down	**ZK80**		
	6	**H86**	down	**ZP63**	up	**UN82**	up	**ZK81**		
	7	**UN86**	up	**ZS82**	down	**H83**	down	**ZZ80**		
	8	**H87**	down	**ZP86**	up	**UN83**	up	**ZZ81**		
	9	**UN87**	up	**084**	down	**R82**	down	**880**		
	10	**R86**	down	**ZA83**	up	**ZF83**	up	**881**		
	11	**ZF87**	up	**085**	down	**R83**	down	**780**		
	12	**R87**	down	**ZF84**	up	**ZP82**	up	**781**		
	13	**ZH82**	up	**H84**	down	**ZS80**	down	**ZS81**		
	14	**ZG82**	down	**UN84**	up	**ZP83**	up	**ZA80**		
	15	**ZJ82**	up	**H85**	down	**081**		**ZA81**		
	16	**ZG83**	down	**UN85**	up	**380**		**ZB80**		
	17	**ZJ83**	up	**R78**	down	**381**		**ZB81**		
	18	**ZG84**	down	**ZA84**	up	**H80**		**ZC80**		
	19	**ZJ84**	up	**R84**	down	**H81**		**ZC81**		
	20	**ZH83**	down	**ZF85**	up	**R80**		**ZD80**		
	21	**ZK82**	up	**R85**	down	**R81**		**ZD81**		
	22	**ZH84**	down	**ZP84**	up	**UN80**		**ZE80**		
	23	**ZK83**	up	**ZG85**	down	**UN81**		**ZE81**		
	24	**ZQ81**	down	**ZP85**	up	**ZG80**		**ZF80**		
	25	**ZK84**	up	**080**		**ZG81**		**ZF81**		
	26			**X**		**782**		**ZP80**		
	27			**O**		**783**		**ZP81**		
	28							**ZQ80**		
	29							**ZQ82**		
	30							**ZR84**		
	31							**ZR85**		

The spacer at the bottom of position number 14 contains Neutron Dosimeter Number ___8V___