Materials Science and Engineering A 437 (2006) 120–125

MATERIALS SCIENCE & ENGINEERING A

www.elsevier.com/locate/msea

High-performance Kirkpatrick-Baez supermirrors for neutron milli- and micro-beams

G.E. Ice [a,*], C.R. Hubbard [a], B.C. Larson [a], J.W.L. Pang [a], J.D. Budai [a], S. Spooner [a], S.C. Vogel [b], R.B. Rogge [c], J.H. Fox [c], R.L. Donaberger [c]

[a] *Metals and Ceramics Division, Oak Ridge National Laboratory, Oak Ridge, TN 37831-6118, United States*
[b] *LANSCE, Los Alamos National Laboratory, Los Alamos NM, United States*
[c] *NRC, Chalk River, Ont., Canada*

Received 19 September 2005; received in revised form 15 April 2006; accepted 15 April 2006

Abstract

High-performance Kirkpatrick-Baez (KB) neutron supermirror optics can nondispersively image neutrons to small spots. Ray tracing finds that under many conditions, KB mirrors work near the theoretical limit set by source brilliance and can deliver orders of magnitude greater intensities than is possible with conventional (nonfocusing) neutron optics. In general, KB neutron supermirrors are preferred when the required beam size at the sample is small and when the distance between the optics and the sample is not small. Waveguides with beam definings slits are preferred for very short wavelengths, for big beams and when the slits can be placed very close to the sample. For example, for $\lambda \sim 0.1$ nm, if the distance from the last optical element to the sample is ~100 mm, almost two orders of magnitude greater intensity can be focused onto a 100 μm spot with $M = 3$ KB supermirrors than with a beam guide and symmetric slits. This is independent of whether the beam guide collimates or condenses the beam so long as without slits the beam is larger than the acceptable beam size at the sample. We describe the ray tracing and phase space arguments that support the use of KB supermirrors for producing intense small beams and describe the performance of a prototype KB device which achieved a 89 μm × 90 μm focus. We briefly describe even more advanced methods that can increase the beam divergence on the sample while maintaining a small beam.
© 2006 Elsevier B.V. All rights reserved.

Keywords: KB supermirror; Imaging; Neutron; Focusing

1. Introduction

The Kirkpatrick-Baez (KB) geometry (Fig. 1) uses crossed mirrors in grazing incidence to condense X-ray and neutron beams [1]. Compared to earlier focusing methods, Kirkpatrick-Baez mirrors reduce astigmatism (unequal focal length in vertical and horizontal directions) and with elliptical KB mirrors there is no spherical aberration. Neutron supermirrors efficiently reflect neutrons with wavelengths λ when the mirror angle is less than a maximum that scales linearly with wavelength,

$$\theta_{\max}(\text{rad}) \sim \frac{M\lambda(\text{nm})}{56.5} \tag{1a}$$

Here M refers to the ratio of the maximum supermirror angle compared to the maximum efficient scattering angle of a nickel surface (i.e. for $\lambda = 0.1$ nm, the critical angle for an $M = 1$ mirror is the same as a nickel mirror ~0.1°). Alternatively, the minimum wavelength passed by a supermirror is determined by the scattering angle,

$$\lambda_c(\text{nm}) \sim 56.5\frac{\theta(\text{rad})}{M} \tag{1b}$$

Because neutron supermirrors reflect neutrons specularly, they are inherently nondispersive; all wavelengths greater than the λ_c are focused nearly equally. The combination of KB geometry and neutron super mirrors therefore allows for an efficient nondispersive neutron focusing option. Eqs. (1a) and (1b) are extremely important, because the maximum divergence (in both the horizontal and vertical axis) that can be focused onto a sample scales with the glancing angle of the focusing KB mirror. As seen from Eq. (1a), the larger M and λ, the larger the possible divergence.

Although even more sophisticated systems like Wolter optics [2] and Advanced Kirkpatrick-Baez (AKB) optics [3] have desir-

* Corresponding author. Tel.: +1 865 574 2744; fax: +1 865 574 7659.
E-mail address: icege@ornl.gov (G.E. Ice).

0921-5093/$ – see front matter © 2006 Elsevier B.V. All rights reserved.
doi:10.1016/j.msea.2006.04.096

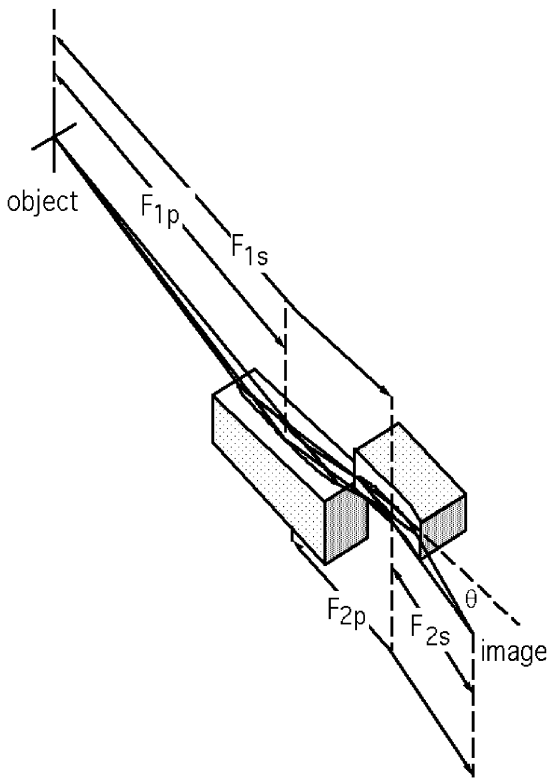

Fig. 1. Kirkpatrick-Baez mirror pair. Elliptical mirrors focus from one focus to another in the plane of reflection. The rays act almost independently in the vertical and horizontal focusing planes.

able performance properties for *imaging*, simple KB mirrors perform *near the brilliance limit set by the source* for most microfocusing applications [4]. In addition, KB optics are technically much easier to produce than Wolter optics, since they do not require confocal surfaces of revolution which are difficult to manufacture in grazing incidence optics. KB mirrors are also somewhat easier to build and align than AKB optics. Furthermore, the four mirror AKB optical design *does not* increase the acceptance aperture for focusing.

The importance of high-performance nondispersive focusing optics for neutrons has recently been recognized [4]. Nondispersive optics are required for most spallation and for many reactor based experiments, and as we describe below, focusing is essential for most experiments when the sample size is small. For example, we have modeled the relative performance of KB optics compared with more traditional optics based on beam guides and slits. As described in reference [4], for $\lambda \sim 0.1$ nm, there is a cross over between supermirror-based KB optics and beam guide systems when the ratio of the sample size, S to the sample distance, D is less than ~0.007; $S/D < 0.007$. For example, with $S/D \sim 0.001$, almost two orders of magnitude more flux can be delivered onto a small spot S with a KB mirror system than with an optimized beam guide and slit. These conditions are not unusual and for most modern instruments D tends to be on the order of 250–500 mm, which justifies focusing optics for samples less than 2–5 mm in size. KB mirrors become even more favorable for large wavelengths and less favorable for shorter wavelengths.

To demonstrate the feasibility of nondispersive focusing with KB supermirrors we have designed and built a simple KB mirror system based on bent mirrors [4]. First experiments with the prototype system have been previously reported [4]. In these first measurements, focused beams down to ~185 μm × 105 μm were measured. These experiments demonstrated nondispersive focusing with KB mirrors and showed that gravitational and other causes of dispersion were negligible at thermal wavelengths. However, because the measurements were made without a real-time area detector, it was difficult to optimize the mirror focusing parameters, so the measured gains – although significant – were only a fraction of the theoretical limit. Here, we describe the underlying ray tracing and phase space arguments used to justify the KB mirror approach and report on measurements made at the Chalk River NRU reactor in which a real-time area detector was used to accelerate focusing adjustments so that beams below the design goal of 100 μm were achieved. Gains are calculated and compared to the theoretical values.

2. Ray tracing and phase space justification

Ray tracing programs were used to study methods of producing small neutron beams. This research was initiated to explore the potential performance of a polychromatic neutron microbeam for micro-neutron Laue diffraction. For the purposes of this study, the ray tracing programs assume simple source properties with an ~9.5 cm × 13 cm source (close to that of the SNS) and with neutrons uniformly radiated into 4π steradians. Although this model is only an approximation of the actual source distributions, it allows for a clear comparison between the efficiency of different approaches for making small beams. Various focusing geometries were explored and were compared to the use of slits to produce small beams from larger beams passed – for example – by waveguides. This approach not only allows for a comparison between different optical approaches, but also allows for a comparison to ideal theoretical performance.

We define ideal optical performance as a method that preserves the source brilliance (neutrons/s/mm^2/mrad^2/$\Delta\lambda$) within the beam emittance (horizontal size × vertical size × horizontal divergence × vertical divergence) that can be accepted by the experiment. If we assume the source brilliance is uniform within the four-dimensional (4-D) source phase volume, then the ideal flux on the sample is a ratio of the beam 4-D phase space volume at the sample divided by the total source 4-D phase space volume. This is a good assumption for most purposes, since the phase space volume accepted for experiments is typically very small compared to the characteristic length scale for intensity variations within the source phase space.

Consider, for example, an ideal optical system that can bring a portion of the source 4-D phase space to the sample. The flux at the sample can be calculated for this ideal optical system from the volume of the source emittance compared to the emittance at the sample. For example, with a 10 cm × 10 cm source compared to a 0.1 mm × 0.1 mm beam, and with horizontal divergence of 5 mrad × 5 mrad, approximately 2×10^{-12} of the source flux can ideally be transported into such a beam at the sample. Therefore,

performance of optics should be compared both to the ideal performance as defined above, and to the total emittance that can be accepted by the experiment. A good optical system should deliver source-limited brilliance within the emittance accepted by the experiment.

If an aperture can be placed very near the sample, then slits work brilliantly for defining beam size without restricting divergence. A beamline with a single slit – at the sample – for example, views the entire source and the divergence on the sample is determined simply by the ratio of source size to sample distance. If larger divergences are useful, the experiment can be moved closer to the source, or a divergence preserving/enhancing optic, such as an adiabatic waveguide can be inserted upstream of the slit.

However, when the beam defining slit cannot be moved very close to the sample, focusing is essential. For example, if the beam size on the sample is on the order of 100 μm, and the drift distance between the last optical element and the sample is 10 cm, then, unless the beam is focused, the beam must be drastically collimated to keep it from spreading between the optics and the sample. Ray tracing finds that with a diverging, focusing or collimated beam, if *a pair of simple slits* are used to shape the beam to the proper size, then the maximum phase space volume that can be passed with a 10 cm drift distance and a 0.1 mm × 0.1 mm beam is $\sim 2.3 \times 10^{-14}$. This is two orders of magnitude below the ideal intensity possible with 5 mrad × 5 mrad divergence and is a general result that is nearly independent of source distance, beam divergence wavelength or other factors (so long as slits are required to shape the beam size). Condensing Soller slits offer, a more efficient way of tailoring the phase space but it is difficult to manufacture Soller slits with ∼60 μm spacing and with minimal loss between channels.

By contrast, a KB mirror system can efficiently focus a neutron beam to a small spot size while nearly preserving source brilliance. State-of-the-art KB X-ray mirrors have recently focused beams to less than 40 nm and have negligible aberrations under most practical conditions. Ray tracing finds, in fact, that the flux and spot size of an ideal KB mirror system is proportional to spot size required at the sample and can be easily adjusted with an upstream aperture. This proportionality breaks down only when the spot size becomes similar to the acceptance aperture of the KB mirrors (large beams) or when the mirror surface quality introduces beam blurring similar to the size of the geometrical image (very small beams).

To quantify the performance of a KB system we assume a wavelength bandpass greater than 0.1 nm and an M of 3. From Eq. (1), this sets a critical angle of about 5 mrad and a useful nominal glancing angle of 4 mrad (the downstream end of each KB mirror will have a slightly larger scattering angle than the nominal glancing angle at the center of the mirror). The fraction of the source emittance focused onto the sample with this model KB system is insensitive to the clearance between the last optical element and the sample but is sensitive to the required spot size at the sample. For a focal spot FWHM of ∼0.1 mm in both the horizontal and vertical directions the model KB system can deliver $\sim 2 \times 10^{-12}$ of the source phase space volume with a FWHM divergence of ∼2.3 mrad in each axis. This is almost two orders of magnitude, greater than this is possible with beam defining slits. In addition, the integrated flux within the source phase space having similar FWHM divergences and spot sizes is only about 10% greater. Hence, the KB optics nearly preserve the beam brilliance although the phase space distributions in the four axes are altered from uniform distributions to nearly Gaussian distributions.

The lessons from ray tracing, Eq. (1) and from phase space optics can be summarized as follows:

(1) For KB mirrors, larger M and larger λ means larger angle, which means larger divergences are possible on the sample.
(2) Assuming good reflectivity, KB mirrors nearly conserve source brilliance at the sample.
(3) For small beams the total emittance that can be collected onto a sample is very small if slits are required to define the beam size unless the slits can be moved very close to the sample.

Because KB mirrors work so close to the theoretical limit for small beams, to be competitive for small beams, any alternative optics must have advantages in terms of ease of use, cost, divergence passed or ability to scale to large beam size.

3. Experimental geometry

In order to test these ideas, experiments were performed on the Chalk River NRU L3 beamline. A diagram of the optical arrangement is given in Fig. 2. This beamline is an engineering-materials beamline optimized for the study of residual stress distributions [5]. Under normal operations, it runs as a monochromatic line and the beam passes a monochromator. For

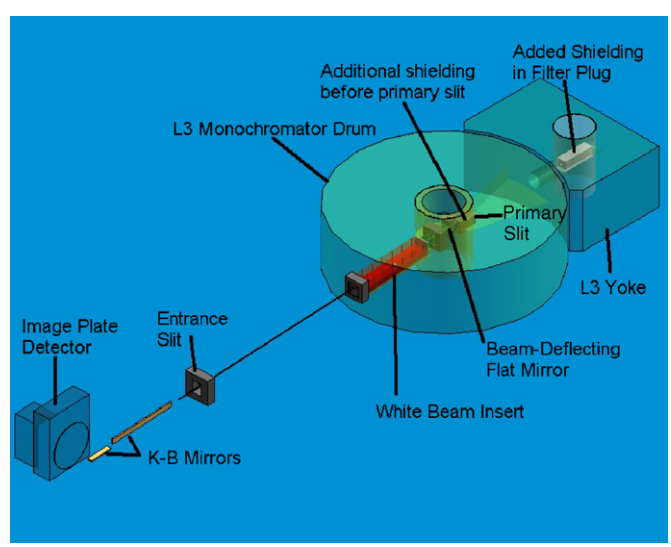

Fig. 2. Schematic of optical layout. A specially designed insert placed in the NRU beamline L3 drum is used to reflect neutrons out of the direct beam path. Shielding suppresses the direct beam. [The designer that made this above picture has agreed to add the aperture, mirrors and image plate detector to this picture. He will send to me and I will add new annotations.]

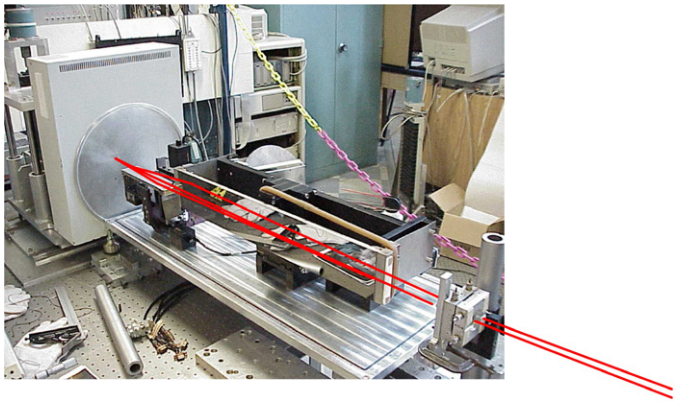

Fig. 3. KB mirrors at Chalk River with an image plate detector at the beam focus. The approximate path of the neutrons is indicated by the red lines. (For interpretation of the references to colour in this figure legend, the reader is referred to the web version of the article.)

the polychromatic experiments, the monochromator crystal was removed and replaced by a 200 mm long neutron supermirror (Fig. 2). All mirrors used were nominal $M = 3$ supermirrors set to ∼4 mrad glancing angles. The mirror in the monochromator was preceded and followed by beam defining slits that together with aligned apertures suppressed the direct line-of-site beam and allowed a small 1 mm horizontal by 3 mm vertical polychromatic beam to exit the monochromator tank. Because of the divergence of the neutron beam, the deflecting mirror in the monochromator tank was sufficiently long to fill the acceptance aperture of the horizontally deflecting 600 mm long KB focusing mirror.

The KB mirrors were mounted on an optical table ∼5 m from the beam defining apertures. The mirrors were preceded by an adjustable slit that allowed the beam to be trimmed to reduce neutrons that were not incident on the two mirrors. The mirrors could be moved into and out of the beam and the mirror angles were adjustable.

The mirrors were bent to elliptical approximations using a bending scheme developed at the Advanced Light Source, Berkeley [6]. In this arrangement, leaf springs are used to apply moments to the mirrors. By spreading the base that holds the mirrors, moments of nearly equal magnitude but opposite sign are applied to the respective ends of the mirrors. By pushing the mirror, moments of the same sign are applied to the ends of the mirror. The combination of the two adjustments allows the mirror curvature to be adjusted to approximate an ellipse.

The beam focus was monitored with a portable real-time neutron sensitive camera for preliminary alignment of the mirrors and for adjustment of the mirror bending mechanism. This camera was set so the neutron sensitive screen was in the theoretical focal plane of the KB system. Although the resolution of the real-time camera was insufficient for final optimization, it allowed for adjustments of the upstream slits, mirror angles and for rough adjustment of the bending parameters. Knife edge scans were then used to fine-tune the mirror focusing adjustments. A picture of the KB mirrors with an image plate detector at the focus is shown in Fig. 3.

4. Measurements

The mirror angles were set by measuring the deflection of the incident beam. As shown in Fig. 4, the beam passed by a KB mirror system typically has four spots. One spot is due to neutrons that pass both mirrors without being deflected, one spot arises from neutrons reflected by the horizontally focusing mirror only, one spot arises from neutrons reflected by the vertically focusing mirror only and the one spot is the doubly focused spot. The mirror angles can be precisely measured; the beam displacement is measured by monitoring the position of the deflected and undeflected beams before and after the mirrors are inserted. It should be noted that by carefully aperturing the beam upstream or downstream of the mirrors, spots can be selectively removed and leave only the doubly focused spot.

The mirror curvature was pre-calibrated using an optical laser to correlate micrometer settings of the adjustment screws to various radii of curvature. This method works well for adjusting the overall curvature of the mirror but was relatively insensitive to the asymmetric bending adjustment. Ray tracing calculations had indicated that the asymmetric bending adjustment made only a small difference in the ultimate focal spot size. However, adjustment of the vetical mirror moment asymmetry significantly reduced a low angle tail (spherical aberration) from the vertical focusing mirror and increased the beam intensity at the focus. The focal spot size on an image plate placed in the focal plane was limited by the point-spread-function of the detector.

To, more accurately, determine the beam size and shape, a knife edge was passed through the focal spot both in the vertical and horizontal directions. The derivative of the knife edge scans was fit to a Lorentzian to estimate the FWHM of the focal spot. The measured FWHM were 89 μm × 90 μm.

5. Gain

No term appears to be so loosely used in the neutron literature as gain. For this reason, we will define several measures of gain and present our best estimates of the measured gain for the system. To make these comparisons, we depend on the geometrical optics of the beam defining slits in the monochromator tank. This is because we pass a white beam, which makes it extremely difficult to measure the change in flux/unit area that is realized *without* the beam defining aperture and deflecting mirror.

Gain 1 is defined as the flux/unit area measured in the focused beam peak divided by the intensity of the unfocused beam. This gain has little direct meaning as the intensity in the beam at the sample position is greatly reduced by the slit system compared to the intensity without the beam defining slit upstream of the KB mirrors.

Gain 2 is defined as the measured flux of the KB-focused beam compared to the theoretical flux of a similar beam produced by beam defining apertures but without the objective slit or the KB mirrors. This gain is estimated by comparison to the ray tracing estimates of gain 1 and ray trace estimates for the relative flux on the sample for ideal KB and slit systems (assuming a 10 cm drift length). We assume for the purposes of comparison that the performance of a slit in a beamline is well understood.

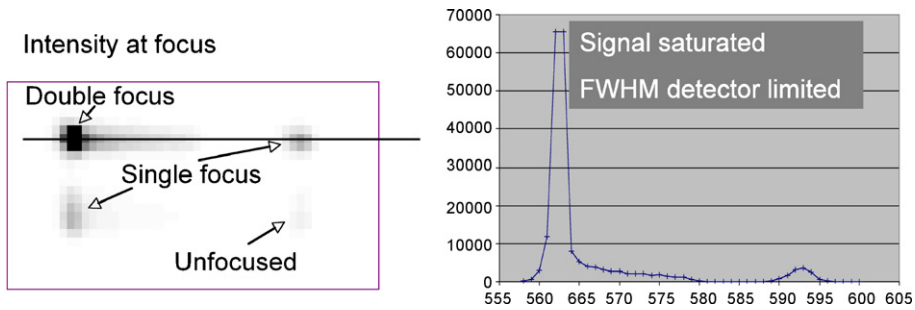

Fig. 4. Doubly focused spot at image plate detector. The FWHM is detector limited and saturated. The measured spot size with knife edge scans is 89 μm × 90 μm.

Gain 1 can be directly measured from the intensity/pixel of an area detector placed at the image plane. The intensity of the focused beam was 20 times larger than the intensity of the unfocused beam even though the reflectivity of the mirrors was estimated to be only about 0.75^2 at 0.1 nm. However, the resolution of the area detector was about 200–250 μm, which is significantly larger than the knife edge determined spot size (∼90 μm). In addition, the focused intensity actually saturated the detector, so that only a lower bound for gain can be made. However, the lower limit of gain 1 by this definition is ∼100–160. This compares favorably with the theoretical gain 1 of about 140, estimated from the intercepted beam size 2.4 mm × 0.8 mm and the focal spot size 0.09 mm × 0.09 mm and the mirror reflectivity of ∼80%.

Gain 2 assumes a ray-trace calculated difference between an ideal KB mirror produced beam and a slit-produced beam of about 10^2. Assuming the reflectivity of all three mirrors is about 80% over the useful bandpass, then gain 2 is about 51. Without losses for reflectivity this gain is near ideal 100× since gain1 is near the theoretical gain predicted.

6. Future developments

Because a KB mirror works near the theoretical limit set by the source brilliance it may seem odd to report that there are *even more advanced designs* are practical. However, KB mirrors preserve source brilliance within a *restricted* emittance that is typically smaller than can be passed by neutron beam guides *for large samples*. We propose two methods to extend KB technology to increase the emittance. In one method (Fig. 5a), mirrors are nested against each other so that some rays are first reflected upward and some first reflected sideways. This approach increases the divergence that can be collected from about θ_c to about $1.6\theta_c$. As this increased divergence is in both directions the total flux density can be increased by about a factor of 2.5. This kind of KB mirror system is already in use for compact X-ray focusing systems.

A second more radical approach uses additional mirrors to deflect parts of the incident beam. In the plane of scatter, the convergence limit for a mirror is set by the lowest possible mirror scattering angle, 0, and the highest possible scattering angle θ_c. The ultimate convergence limit is therefore $2\theta_c$. This limit is approached with the nested KB mirror optics described above.

A practical solution to increase the beam divergence on the sample and preserve the excellent focusing properties of elliptical KB optics uses identical elliptical focusing mirrors and simple plane mirrors to increase the collected convergence onto the sample. We have given the name, deflecting KB mirror optics to this approach. A one-dimensional schematic of this system (with an increased divergence of three) is shown in Fig. 5b. Some rays reflect off only a single elliptical focusing mirror (mirror 1) and are focused on the sample. Other rays reflect first off a plane mirror (at $\sim\theta_c/2$) (mirror 2) and then off a second elliptical mirror with the same figure as mirror 1. These rays also focus on the sample, but with the average incident beam angle displaced by θ_c. Other rays can be deflected first by a single mirror at θ_c, or by a series of plane mirrors. This approach has the potential to extend mirror collection angles to collect very large divergences.

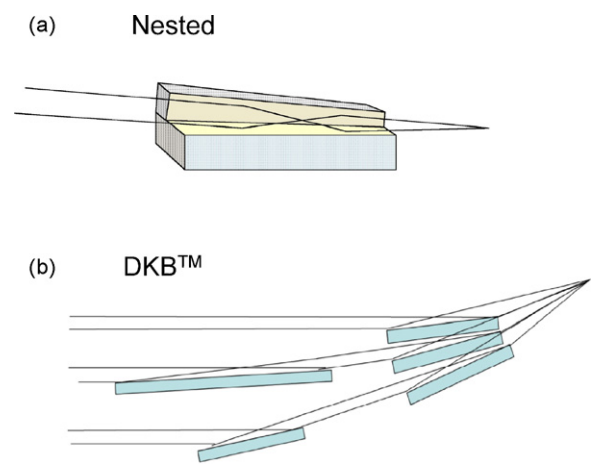

Fig. 5. (a) Nested mirrors increase the acceptance aperture by a factor of about 2.5. (b) Deflected KB optics can increase the aperture by a factor of 5 in each direction for a total gain of 25 over standard KB mirrors (with a maximum of only one deflection in each plane prior to the elliptical mirrors). Shown in (b) are two deflection mirrors: one at half the critical angle and one at the critical angle. Matching mirrors can reflect downward. Even greater gains are possible with more deflections.

Acknowledgements

We wish to thank Alastair MacDowell of the Advanced Light Source for the spreadsheet used to calculate the optimum shim thicknesses for the mirrors and Lassen Assoufid for measurement of the mirror figure errors prior to coating. G.E.I., C.R.H., B.C.L., J.W.L.P., J.D.B. and S.S. were supported by the Laboratory Directed Research and Development Program of Oak

Ridge National Laboratory (ORNL), managed by UT-Battelle, LLC for the US Department of Energy under contract No. DE-AC05-00OR22725. SCV collaborated on measurements at the Los Alamos Neutron Science Center at Los Alamos National Laboratory. LANSCE is funded by the US Department of Energy under contract W-7405-ENG-36. RBR, JHF and RLD of the National Research Council, Canada, collaborated on experiments at the Chalk River NRU reactor. The NRU is owned and operated by Atomic Energy of Canada Ltd. (AECL) and is located at the Chalk River Laboratories of AECL, while the neutron scattering facilities are owned and operated by the National Research Council.

References

[1] P. Kirkpatrick, A.V. Baez, J. Opt. Soc. Amer. 38 (1948) 766–774.
[2] H. Wolter, Ann. Physik 10 (1952) 94.
[3] R. Rodama, N. Ikeda, Y. Kato, Y. Katori, T. Iwai, K. Takeshi, Opt. Lett. 21 (1996) 1321–1323.
[4] G.E. Ice, C.R. Hubbard, B.C. Larson, J.W.L. Pang, J.D. Budai, S. Spooner, S.C. Vogel, Nucl. Inst. Meth. A 539 (2005) 312–320.
[5] T.M. Holden, B.M. Powell, G. Dolling, Mat. Res. Soc. Symp. Proc. 376 (1995) 7–12.
[6] M.R. Howells, D. Cambie, R.M. Duarte, S. Irick, A. MacDowell, H.A. Padmore, T. Renner, S. Rah, R. Sandler, Opt. Eng. 39 (2000) 2748–2762.