INDUCTION HEATING PART OF INNOVATIVE MANUFACTURING PROCESSES

Innovative technologies to cost-effectively advance automotive part performance can be achieved through improvements to existing systems and disruptive technologies. Induction heating is contributing to these innovations.

George Pfaffmann, FASM**
Ajax Tocco Inc.
Madison Heights, Mich.

Product performance improvements in the automotive industry are closely related to materials and materials processing systems that must not only deliver higher performance, but also contribute to more flexible designs. Achieving these increased demands cost effectively requires development of leap-frog technologies in heat treating and thermally enhanced manufacturing processes including "disruptive technologies" and improvements to existing systems. Examples of innovations in the area of induction heating that illustrate this concept are:

• Heat-treating and/or elevated-temperature thermal forming for improved product performance plus improved range of product design flexibilities with the added benefit of reduced manufacturing cost.

• Development of a disruptive technology that involves the use of an elevated-intensity magnetic field processing (EIMFP) to develop unique customized microstructures with enhanced performance capabilities, plus a multitude of other metallurgical transformation phenomena. Conceptually, a similar analog is a thermal dynamic, free energy driven system without the thermal component. This exciting technology originated and is being developed at Oak Ridge National Laboratory (ORNL), Oak Ridge, Tenn. It is in its early developmental stage, and appears to have the capability to provide major improvements in material performance and processing capability exceeding that currently available. The technology can be further enhanced by the addition of induction heating.

The environment that fosters and drives these technologies, both to understand and to properly apply them, requires a distinct change in the knowledge base and application capability. Heat treating, or more broadly, thermally enhanced manufacturing processes, together with material processing systems traditionally have been, and still are to a large extent, driven by experience-based technology innovation.

Computerized modeling has provided additional valuable insight and expansion of the knowledge base gained from actual experience. However, these resources have limited capability because they are not equipped with reliable pedigreed material-characterization data, and they also must take into consideration the multivariant nonlinear aspects of the involved thermal dynamics. To expand the capability of many computer-developed models requires actual simulation validity. We must move from an experienced-based technology to a structured simulation tested, engineering science-based approach to properly understand and apply these new innovations in thermal processing. The automotive companies are particularly challenged in this regard due to increased outsourcing of both their engineering and manufacturing supply-chain support. The challenge is to marshal the necessary resources and access expanded supplier capabilities to meet the demands of these more sophisticated technologies.

Enhanced Automotive Crankshaft Fillet-Hardening System

This example demonstrates what can be accomplished by totally reevaluating an existing process using simulation-based engineering science principles to comprehensively analyze the basic tenets and process requirements of the system. Using a greenfield approach to determine optimal material processing parameters, this work included totally redesigning the processing system to improve both product performance and quality supported by critically directed monitoring systems.

Crankshafts present a major heat treating challenge particularly when incorporating

**ASM Life member and member, ASM Heat Treating Society*

Fig. 1 — Crankshaft fillet / journal hardened pattern; the variations in mass at adjacent sections can affect obtaining a uniform hardened profile.

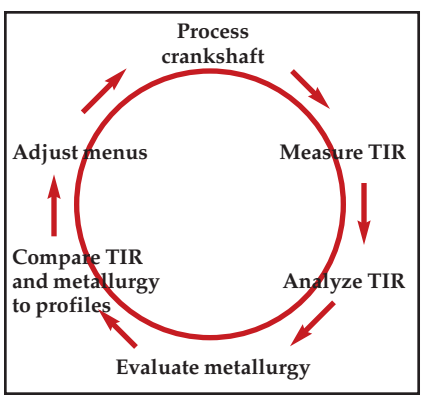

Fig. 2 — Interrelated process variables make induction heating of crankshafts a complex process.

fillet hardening adjacent to journals. The adjacent complex mass geometry variations have substantial impact on reliably producing the required selective fillet/journal hardened pattern (Fig. 1). Induction hardening must also take into consideration prior processing, incoming variables, and, most importantly, ensure consistent dimensional distortion (TIR run out) to eliminate straightening; a major cost penalty plus reduced strength improvement of fillet hardening.

Several alternative induction heat treatment techniques have been tried which do not meet the objectives. This is due to the multivariant relationship between metallurgical requirements, physical / dimensional relationships, and the complexity of machine tool and tooling requirements (Fig. 2).

Recognizing these comprehensive challenging inputs, the induction heating-equipment suppliers started with the most structured scientific engineering analysis of the total process and equipment-dependent parameters. These inputs were evaluated for relevancy of interdependency. The relationships were studied and validated further by simulation tests on a fully implemented prototype testing set up.

The balance of the project was essentially straightforward because the scientific structure approach provided a comprehensive set of equipment design specifications and operational process parameter-tolerance specifications. The result was a highly successful launch and proven in-plant performance of a state-of-the-art crankshaft fillet-hardening system at a major truck-engine manufacturer (Fig. 3).

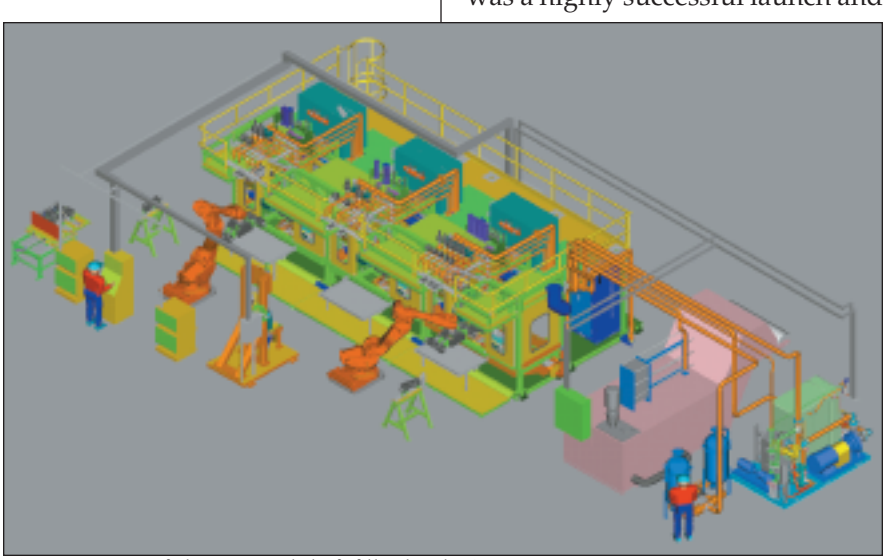

Fig. 3 — State-of-the-art crankshaft fillet-hardening system.

Hot Metal Gas Forming (HMGF)

The U.S. auto industry is looking for improved performance of automotive structural components. The requirements are for lighter weight, stronger structural systems along with continually increasing demand for improved crash-worthiness and ensured occupant safety. This has driven the design of more efficient and stronger body structural members having the capability to absorb the sustained energy envelope in the event of a crash.

The backbone of a vehicle's body structure design largely consists of components such as frame rails, side pillars, cross members, etc. These traditionally have been constructed from a fabrication of stampings, which are welded to produce a box-like structural member to have the necessary section modulus for strength and rigidity.

Body-design engineers realize that generating these box structures from a continuous envelope like a tube would provide a substantially more reliable and much stronger structural members. This demand drove the industry to use hydroforming to convert tubular geometries into the required variety of curvalinear cross-sectional configurations to suit vehicle design requirements. The technology was successful in providing structural components having substantial improvements in strength and performance. The issue associated with using this process, particularly with ferrous components, is formability limitations, which required ever higher hydraulic pressures and limited design flexibility. This requirement also substantially increase the capital cost of the equipment. The desire to use higher strength steels made the formability problem even more difficult, and in many cases impossible.

The concept of hot metal gas forming is to elevate the temperature of the tubular part during the forming process to substantially reduce the forming stresses by several

orders of magnitude, which substantially reduces the cost of the equipment and provides additional flexibility in component design. By the use of induction heating, the part is integrally heated within the die in a matter of seconds and a part is subsequently formed at improved production rates over those for hydroforming technology. HMGF is capable of handling both ferrous and nonferrous materials, and can handle forming high strength steel without any problems. The expanded capability of the induction heating system can profile the temperature along the axial length of the part to complement formability requirements. Also, because the part is heated above the Curie temperature, it can be then transferred into a quenching die for martensitic phase transformation hardening and strengthening. In addition, quenching can be selectively profiled to harden the areas of high-applied stress and, conversely, to arrest the cooling of the areas required for welding.

Elevated-Intensity/Thermal Magnetic-Field Processing (EIMFP/EITMFP)

This is a new technology that can be considered a breakthrough "disruptive technology" rather than an improvement to an existing system. Pioneering experiments by an R&D team led by Dr. Gerry Ludtka at Oak Ridge National Laboratory demonstrate that this new approach enables customizing metallurgical structures to tailor performance for a specific application for the next generation of advanced materials[1]. The technology can be applied to any material that is electrically conductive and is applicable for both liquid and solid state processing.

Using high-intensity magnetic fields coupled with thermal processing enables the continuous shifting of phase diagrams and acceleration of transformation kinetics. Where metallurgists before were limited to a single phase diagram for a specific alloy system, the transformation temperatures and phase boundaries can be incrementally shifted through the application of a magnetic field (Fig. 4) for the pseudobinary phase diagram calculated using Thermo-Calc software (Thermo-Calc Software Inc., McMurray, Pa.; www.thermocalc.com) for AISI 1045 carbon steel. Similar reactions also can be generated at lower field intensities. The free-energy equation for phase equilibria that defines a phase diagram has an additional term that is linearly dependent on magnetic field strength. Thus, there is no limit to the phase equilibria shifting that can occur using magnetic fields; there are an infinite number of phase diagram possibilities rather than a single one. Metallurgists / materials scientists now have another processing tool to develop unique microstructure-property combinations impossible to achieve using current processing methodologies. For example, retained austenite in an AISI 52100 alloy steel can be converted to martensite using EIMFP at ambient temperature immediately following a quench.

A novel application of EIMFP incorporates a solenoidal induction system with an elevated-intensity magnetic field, which can be developed and optimized as a noncontact ultrasonic processing system through an electromagnetic acoustical transducer effect. When induction heating is applied in an elevated-intensity magnetic field environment, the induction heating coil is typically configured in such a way that a substantially higher intensity ultrasonic treatment occurs naturally. The resulting configuration is that of a highly effective electromagnetic acoustical transducer (EMAT). This approach is unique because the magnetic field strength of the high-field magnet can greatly exceed that used in a typical EMAT device[2]. Consequently, the synergistic interaction of a high surface current density (induced via induction enhanced heating) with the steady-state high magnetic field results in an especially effective method to create a high energy density acoustic environment (Fig. 5). The exceptionally high energy efficiency of the resulting electromagnetic transducer is due to the coupled induction-enhanced use of a high-intensity magnetic field, which greatly reduces the current need to achieve the same acoustic pressure. This provides an efficient noncontact method to apply high-intensity ultrasonic energy to the pro-

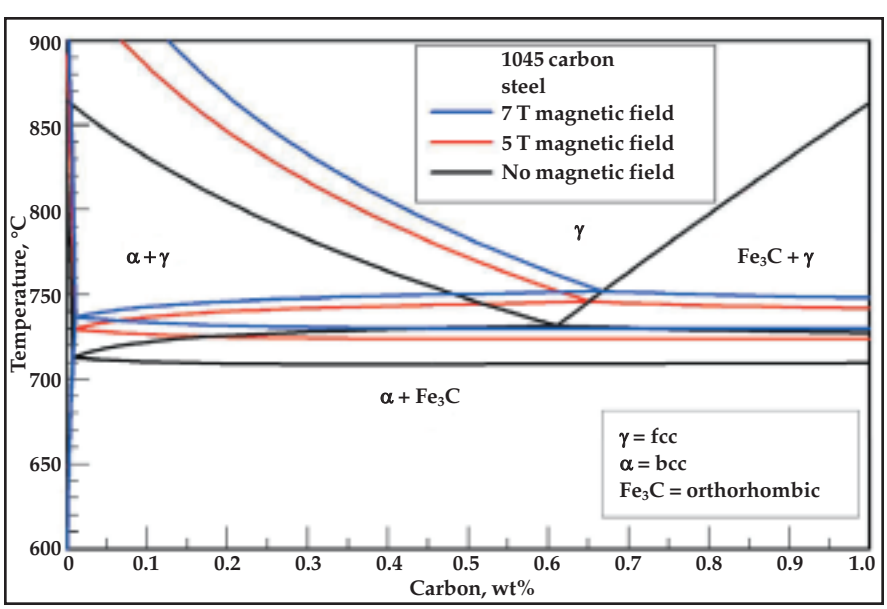

Fig. 4 — Magnetic fields shift the transformation temperatures and phase solubility limits; pseudobinary phase diagram for 1045 carbon steel.

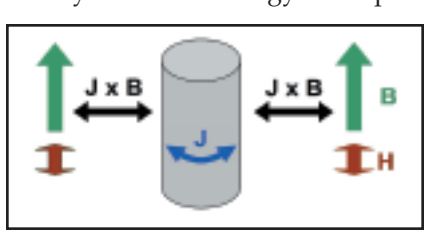

Fig. 5 — Induction heating in an elevated intensity-field magnet: H = applied field of the induction coil; J = induced surface current in the sample; B = static field of the magnet; and J × B = resulting force. The H-field of the induction heating coil is insignificant μH << B) compared with the static B-field of the elevated intensity-field magnet.

cessing of metals. Furthermore, the applied ultrasonic excitation can be uniformly distributed through the mass of the metal component.

Using this elevated-intensity EMAT method, noncontact ultrasonic treatment can be applied to the processing of metal alloys in either the solid or liquid condition. Molten metals can be contained in a ceramic crucible that is readily penetrated by the electromagnetic induction fields. Ultrasonic treatment on solid material can be achieved either at near-ambient or elevated temperatures. When applied under high-temperature conditions, temperature control can be achieved via the induction heating process, whereas at ambient temperatures, gas cooling might be required to remove the incidental heat coupled by the induction system (Fig. 6).

Ultrasonic processing of materials in both the melt and solid phase is proving to be highly beneficial to metals properties[3]. Table 1 shows improvement in properties of magnetic-field processed austempered ductile iron. In the liquid state, acoustic treatment can be used to enhance diffusion, dispersion, and dissolution processes, resulting in improvements in the cleaning, refining, degassing, and solidification of the melt. Ultrasonic processing can be used to assist in grain refinement and to minimize segregation during solidification. Degassing with ultrasonics has resulted in reduced gas concentration, higher density, and improved mechanical properties. It has been demonstrated that nondendritic structures can be produced using an ultrasonic cavitation treatment, resulting in increased plasticity and enhanced strength. In the solid state, ultrasonic treatment could potentially be used to minimize residual stress, accelerate phase transformation processes, enhance nucleation and growth during phase transformations, enhance diffusive processes by enhancing the mobility of diffusing species, and enhance processes that have a threshold activation energy. The method can be coupled with elevated-intensity magnetic field processing[4], but can also be used where only ultrasonic treatment is beneficial. This innovative technology holds significant promise for myriad materials applications and has the potential to improve automotive materials and thermally / magnetically enhance manufacturing processes.

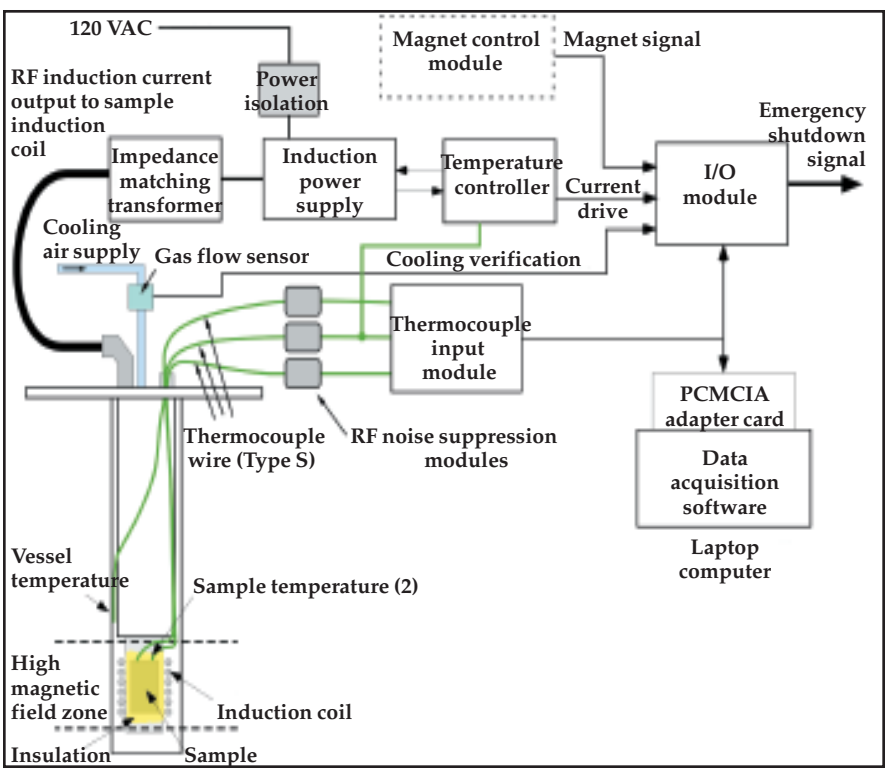

Fig. 6 — EI-EMAT Thermal Magnetic Processing facility establishes a new capability for simulation-based engineering science-driven research at Oak Ridge National Laboratory, Oak Ridge, Tenn.

Table 1 — Properties of Conventionally Heat Treated vs. Magnetic-Field Processed Austempered Ductile Iron

Property	Conventional austemper	Two-step austemper (magnetic field)
Yield strength, MPa	650	1,250
Ultimate tensile strength, MPa	1,080	1,470
Strain hardening exponent	0.10	0.11
Fracture toughness, MPa√m	60.5	76.6
Volume fraction ferrite, %	63.9	92.3
Volume fraction austenite, %	36.1	7.7
Austenite carbon content, %	1.92	2.108

Source: NHMFL 2005 Annual Report.

References

1. http://www.ornl.gov/~webworks/cppr/y2006/rpt/123141.pdf
2. J. B. Wilgen, et. al., Non-Contact Ultrasonic Treatment of Metals in a Magnetic Field, Proc. TMS 2007 Symp. on Processing of Materials Under the Influence of External Fields, Orlando, Fla., Feb., 2007.
3. G.I. Eskin, Broad prospects for commercial application of the ultrasonic (cavitation) melt treatment of light alloys, Ultrasonic Sonochemistry, 8, p 319-325, 2001.
4. G.M. Ludtka, et. al., In-situ Evidence of Enhanced Phase Transformation Kinetics Due to a High Magnetic Field in a Medium Carbon Steel, *Scripta Materialia*, 51, p 171-174, 2004.

For more information: George Pfaffmann is vice president technology located at Ajax Tocco Inc., Detroit Development and Support Center, 30100 Stephenson Hwy., Madison Heights, MI 48071-1630; tel: 248-691-2281; fax: 248-399-8603; e-mail: gpfaffmann@ajaxtocco.com.