Historical List of Publications

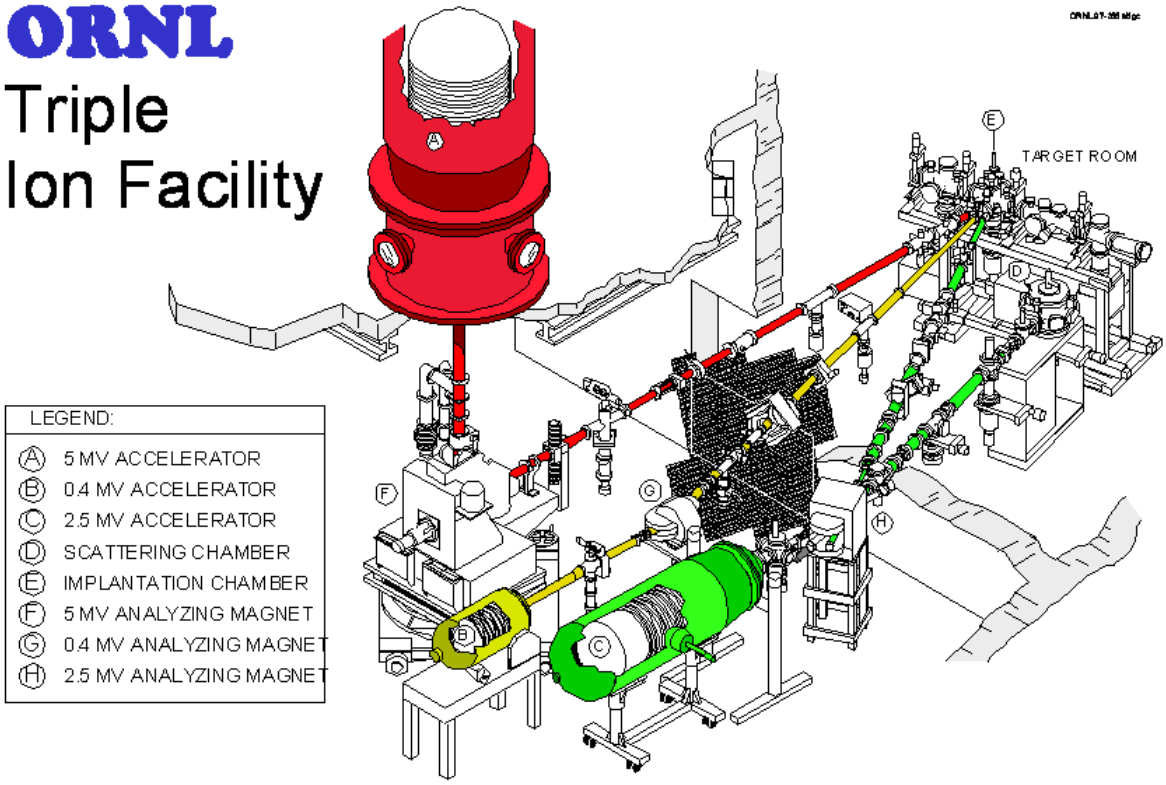

The ORNL Triple Ion Laboratory (TIL) operated from the mid 1980s to the late 1990s. Prior to the addition of the third beam line, the facility operated for a number of years with the capacity for single and/or dual ion irradiations. During this period, a clever approach was used to carry out some early triple beam, heavy ion plus He plus H (deuterium), ion irradiations using only two accelerators [see the first reference under Metals and Alloys]. In addition to its use as an irradiation facility, the TIL supported a range of ion beam analysis experiments. Although the facility was primarily funded by the U.S. Department of Energy's Office of Basic Energy Sciences, the TIL (and its processor) supported materials research for a range of programs. These included the national fast reactor and fusion reactor materials programs, as well as critical experiments in its final years in support of the ORNL Spallation Neutron Source.

The following list of publications provides a historical summary of the research conducted using one or more of the particle beams in the TIL. It is not intended to be an exhaustive list, but it illustrates the scope of research that can be carried out in such a facility.

Facility Description and Overviews

M. B. Lewis, W. R. Allen, R. A. Buhl, N. H. Packan, S. W. Cook and L. K. Mansur, “Triple Ion Beam Irradiation Facility,” ORNL/TM-10867, Oak Ridge National Laboratory, December 1988.

M. B. Lewis, W. R. Allen, R. A. Buhl, N. H. Packan, S. W. Cook and L. K. Mansur, “Triple Ion Beam Irradiation Facility,” *Nucl. Inst. Meth. B* 43 (1989) 243-253.

B. R. Appleton, C. C. Koch, J. H. DeVan, K. Farrell, M. B. Lewis, S. Raman, P. F. Tortorelli, and J. M. Williams, "Near Surface Modification: New Techniques and Applications in Materials Science," ORNL/TM-5896, Oak Ridge National Laboratory, August 1982.

L. K. Mansur, E. H. Lee, M. B. Lewis, and S. J. Zinkle, "Applications of Multiple-Ion Irradiations to Metals, Ceramics, and Polymers," Proceedings of the International Conference on Evolution in Beam Applications, November 1991, Takasaki, Japan, Japan Atomic Energy Research Institute, published by Radiation Application Development Association, Tokai-mura, Japan.

Metals and Alloys

K. Farrell, M. B. Lewis, and N. H. Packan, "Simultaneous Bombardment with Helium, Hydrogen, and Heavy Ions to Simulate Microstructural Damage from Fission or Fusion Neutrons," *Scripta Met*. 12 (1978) 1121-1124.

E. H. Lee, G. R. Rao, J. D. Hunn, P. M. Rice, M. B. Lewis, S. W. Cook, K. Farrell, and L. K. Mansur, “Triple Ion-Beam Studies of Radiation Damage in a 316LN Austenitic Alloy for a High Power Spallation Neutron Source,” Materials for Spallation Neutron Sources, M. S. Wechsler, L. K. Mansur, C. L. Snead, and W. F. Sommer, Eds., The Minerals, Metals and Materials Society, Warrendale, PA (1998), pp. 57-65.

E. H. Lee, J. D. Hunn, N. Hashimoto, and L. K. Mansur,” Hardness and Defect Structures in EC316LN Austenitic Alloy Irradiated under a Simulated Spallation Neutron Source Environment Using Triple Ion-Beams,” *J. Nucl. Mater.* 278 (2000) 266-272.

E. H. Lee, J. D. Hunn, G. R. Rao, R. L. Klueh, and L. K. Mansur, “Triple Ion-Beam Studies of Radiation damage in 9Cr-2WTaV Steel for a High Power Spallation Neutron Source,” *J. Nucl. Mater.* 271&272 (1999) 385-390.

L. L. Horton and J. Bentley, "Microstructural Damage Evolution in 'Triple Beam' Ion-Irradiated Fe-10% Cr," Proc. 40th Ann. Mtg. Electron Microscopy Society of America, G. W. Bailey, Ed., Claitors, Baton Rouge, LA, 1982, pp. 588-589.

"The Microstructure of 'Triple Beam' Fe Irradiated Fe and Fe-Cr Alloys," L. L. Horton, J. Bentley, and W. A. Jesser, *J. Nucl. Mater.* 103&104 1085-1090 (1981).

"The Depth Distribution of Displacement Damage in a Iron under 'Triple Beam' Fe Ion Irradiation," L. L. Horton, J. Bentley, and W. A. Jesser, *J. Nucl. Mater.* 103&104 (1981) 1343-1348.

L. L. Horton, J. Bentley, and W. A. Jesser, "The Microstructure of 'Triple-Beam' Ion Irradiated Fe-10% Cr," Proc. 29th Ann. Mtg. Electron Microscopy Society of America, G. W. Bailey, Ed., Claitors, Baton Rouge, LA, 1981, pp. 326-27.

K. Farrell, N. H. Packan, and J. T. Houston, "Depth Profiles of Nickel Ion Damage in Helium-

Implanted Nickel," *Rad. Eff.* 62 (1982) 39-52.

N. H. Packan and K. Farrell, "Ion Damage in 316 Stainless Steel over a Broad Dose Range," Effects of Radiation on Materials, STP 782, American Society for Testing and Materials, 1982, pp. 885-894.

K. Farrell and N. H. Packan, "Comparison of Neutron and Heavy Ion Damage in a Single-Phase Austenite," Effects of Radiation on Materials, STP 782, American Society for Testing and Materials, 1982, pp. 953-962.

N. H. Packan and K. Farrell, "Radiation-Induced Swelling in an Austenitic Alloy: Observations and Interpretation of Effects of Helium," *Nuclear Technology/Fusion* 3 (1983) 392-404.

K. Farrell, P. J. Maziasz, E. H. Lee, and L. K. Mansur, "Modification of Radiation Damage Microstructure by Helium," *Rad. Eff.* 78 (1983) 277-295.

G. R. Rao, K. Farrell, E. H. Lee, M. B. Lewis, and L. K. Mansur, "Effects of Multiple Ion Implantation on Creep of Fe-13Cr-15Ni Alloys," *Scripta Met.* 28 (1993) 287-292.

K. Farrell and E. H. Lee, "Ion Bombardment Damage in a Modified Fe-9Cr-1Mo Steel," Effects of Radiation on Materials, STP 870, American Society for Testing and Materials, 1985, pp. 383-393.

M. B. Lewis and K. Farrell, "Nuclear Microanalysis as a Probe of Impurity-Defect Interactions," Advanced Techniques for Characterizing Microstructures, Publ. Met. Soc. AIME, 1982, pp. 487-501.

M. B. Lewis and K. Farrell, "Migration Behavior of Helium under Displacive Irradiation in Stainless Steel, Nickel, Iron and Zirconium," *Nucl. Instr. Meth. Phys. Res. B* 16 (1986) 163-170.

K. Farrell and E. H. Lee, "Ion Damage in a Fe-10Cr-6Mo-0.5Nb Ferritic Steel," Radiation-Induced Changes in Microstructure: I, STP 955, American Society For Testing And Materials, Philadelphia, 1987, pp. 498-507.

E. H. Lee, T. S. Byun, J. D. Hunn, M.H. Yoo, K. Farrell, and L. K. Mansur, “On the Origin of Deformation Microstructures in Austenitic Stainless Steel: Part I - Microstructures,” *Acta Mater.* 49 (2001) 3269-3276.

E. H. Lee, T. S. Byun, J. D. Hunn, M.H. Yoo, K. Farrell, and L. K. Mansur, “On the Origin of Deformation Microstructures in Austenitic Stainless Steel: Part II - Mechanisms,” *Acta Mater*. 49 (2001) 3277-3287.

E. H. Lee, T. S. Byun, J. D. Hunn, K. Farrell, and L.K. Mansur, “Origin of Hardening and Deformation Mechanisms in Irradiated 316LN Austenitic Stainless Steel,” *J. Nucl. Mater.* 296 (2001) 183-191.

A. F. Rowcliffe, E. H. Lee and P. S. Sklad, "The Effect of Phase Instabilities on the Correlation of Ni-Ion and Neutron-Irradiation Swelling in SA316 Stainless Steel," Proc. Conf. on Irradiation Behavior of Metallic Materials for Fast Reactor Core Components, Supplement, Ajaccioi, Corsica, June 1979, p. 1.

E. H. Lee, L. K. Mansur, and M. H. Yoo, "Spatial Variation in Void Volume during Charged Particle Bombardment - The Effects of Injected Interstitials," *J. Nucl. Mater.* 85-86 (1979) 577.

E. H. Lee, A. F. Rowcliffe, and E. A. Kenik, "Effects of Si and Ti on the Phase Stability and

Swelling Behavior of AISI 316 Stainless Steel," *J. Nucl. Mater.* 83 (1979) 79.

E. A. Kenik and E. H. Lee, "Influence of Injected Helium on the Phase Instability on Ion Irradiated Stainless Steel," Phase Stability during Irradiation, J. R. Holland, L. K. Mansur, and D. I. Potter, Eds., TMS-AIME, 1980, p. 493.

E. H. Lee, P. J. Maziasz, and A. F. Rowcliffe, "The Structure and Composition of Phases Occurring in Austenitic Stainless Steels in Thermal and Irradiation Environments," Phase Stability during Irradiation, J. R. Holland, L. K. Mansur, and D. I. Potter, Eds., TMS-AIME, 1980, p. 191.

E. H. Lee, A. F. Rowcliffe, and L. K. Mansur, "Precipitation and Cavity Formation in Austenitic Stainless Steels during Irradiation," *J. Nucl. Mater.* 103&104 (1981) 1475.

A. F. Rowcliffe and E. H. Lee, "High Temperature Radiation Damage Phenomena in Complex Alloys," *J. Nucl. Mater.* 108&109 (1982) 306.

E. H. Lee, N. H. Packan, and L. K. Mansur, "Effects of Pulsed Dual-Ion Irradiation on Phase Transformations and Microstructure in Ti-Modified Austenitic Alloy," *J. Nucl. Mater.* 117 (1983) 123.

A. F. Rowcliffe and E. H. Lee, "The Stability of the MC Phase in a Stainless Steel Irradiated in Various Environments," presented at the Brighton Conf. on Dimensional Stability and Mechanical Behavior of Irradiated Metals and Alloys, Brighton, England, 2, April 1983, p. 5.

K. Farrell, P. J. Maziasz, E. H. Lee, and L. K. Mansur, "Modification of Radiation Damage Microstructure by Helium," *Rad. Eff.* 78 (1983) 277.

E. H. Lee, L. K. Mansur, and A. F. Rowcliffe, "The Effect of Phosphorous on the Swelling and Precipitation Behavior of Austenitic Stainless Steels during Irradiation," *J. Nucl. Mater.* 122&123 (1984) 299.

A. Hishinuma, N. H. Packan, E. H. Lee, and L. K. Mansur, "Effects of Pulsed and/or Dual Ion Irradiated on Microstructural Evolution in Ti and Si Modified Austenitic Alloys," *J. Nucl. Mater.* 122&123 (1984) 260.

A. Hishinuma and L. K. Mansur, "Critical Radius for Bias-Driven Swelling: A Further Analysis and Its Application to Bimodal Cavity Size Distributions," J. Nucl. Mater. 118 (1983) 91-99.

E. H. Lee and L. K. Mansur, "Evidence for a Mechanism of Swelling Variation with Composition in Irradiated Fe-Cr-Ni Alloys," *Phil. Mag.* 52 (1985) 493.

E. H. Lee, N. H. Packan, M. B. Lewis, and L. K. Mansur, "Effects of Rapidly Pulsed Ion Bombardment on Microstructure and Phase Stability in a Ti-Modified Stainless Steels," *Nucl. Instr. M eth. Phys. Res. B* 16 (1986) 251.

E. H. Lee and L. K. Mansur, "A Mechanism of Swelling Suppression in Phosphorous Modified Fe-Cr-Ni Alloys," *J. Nucl. Mater.* 141-143 (1986) 695.

L. K. Mansur, E. H. Lee, P. J. Maziasz, and A. F. Rowcliffe, "Control of Helium Effects in Irradiated Materials Based on Theory and Experiments," *J. Nucl. Mater.* 141-143 (1986) 633.

E. H. Lee and L. K. Mansur, "Ion Beam Induced Formation of a Stable Phase at the Expense of an Otherwise Dominant Metastable Phase," *J. Mater. Res.* 2 (1987) 291.

E. H. Lee and E. A. Kenik, "Nucleation and Amorphization of Radiation Produced Phases in a

Modified Austenitic Stainless Steel during Irradiation," *J. Mater. Res.* 3 (1988) 840-844.

E. H. Lee and L. K. Mansur, "A Mechanism of Swelling Suppression in Cold-Worked Phosphorous Modified Stainless Steels," *Phil. Mag. A* 61 (1990) 733-749.

E. H. Lee and L. K. Mansur, "Effect of Residual and Injected Oxygen on Swelling in Austenitic Stainless Steels during Irradiation," *Phil. Mag. A* 61 (1990) 751-767.

E. H. Lee and N. H. Packan, "Swelling Suppression in Phosphorous-Modified Fe-Cr-Ni Alloys During Neutron Irradiation," Effects of Radiation on Metals, STP 1046, N. H. Packan, R. E. Stoller, and A. S. Kumar, Eds., American Society for Testing and Materials, Philadelphia, 1989, pp. 133-146.

L. K. Mansur, and E. H. Lee, "Ion Beam Stimulated Reactions in Metallic Alloys," Proc. 46th Ann. Mtg. Electron Microscopy Society of America (1988) 490.

E. H. Lee, and L. K. Mansur, "Effect of Simultaneous B+ and N+ Implantation on Microhardness, Fatigue Life, and Microstructure in Fe-13Cr-15Ni Base Alloys," *J. Mater. Res*. 4 (1989) 1371.

T. Kimoto, E. H. Lee, and L. K. Mansur, "Effects of Helium Injection Mode on Void Formation in Fe-Ni-Cr Alloys," *J. Nucl. Mater.* 158 (1988) 166-178.

E. H. Lee and L. K. Mansur, "Relationship between Phase Stability and Void Swelling in Fe-Cr-Ni Alloys during Irradiation," *Met. Trans. A* 23A (1992) 1977-1986.

G. R. Rao, E. H. Lee, and B. A. Chin, "Ion Implantation Effects on Fatigue Properties on Fe-13Cr-15Ni Alloys," *Surface and Coating Technology* 51 (1992) 112-117.

G. R. Rao, E. H. Lee, L. A. Boatner, B. A. Chin, and L. K. Mansur, "Multiple Ion Implantation Effects on Fatigue Properties of Fe-13Cr-15Ni Alloys," *J. Nucl. Mater.* 191-194 (1992) 748-753.

G. R. Rao, E. H. Lee, B. A. Chin, and L. K. Mansur, "Effects of Simultaneous Boron and Nitrogen Implantation on Microhardness and Fatigue Properties of Fe-13Cr-15Ni Alloys," *Met. Trans. A* 25A (1994) 193-202.

J. D. Hunn, M. B. Lewis, and E. H. Lee, “Hydrogen Retention in Ion-Irradiated Steels,” Proc. 2nd International Topical Meeting on Nuclear Applications of Accelerator Technology, American Nuclear Society Inc., La Grange Park, Illinois (1998) 375.

E. H. Lee and L. K. Mansur, “ Fe-15Ni-13Cr Austenitic Stainless Steels for Fusion and Fission Reactor Applications - Part III: Phase stability during heavy ion irradiation,” *J. Nucl. Mater.* 278 (2000) 20-29.

I-S. Kim, J. D. Hunn, N. Hashimoto, D. L. Larson, P. J. Maziasz, K. Miyahara, and E. H. Lee, “Defect and void evolution in oxide dispersion strengthened ferritic steels under 3.2 MeV Fe+ ion irradiation with simultaneous helium injection,” *J. Nucl. Mater.* 280 (2000) 246-274.

E. H. Lee, J. D. Hunn, T. S. Byun, and L. K. Mansur, “Effects of helium on radiation-induced defect microstructure in austenitic stainless steel,” *J. Nucl. Mater.* 280 (2000) 18-24.

J. D. Hunn, E. H. Lee, T. S. Byun, and L. K. Mansur, “Helium and hydrogen induced hardening in 316 LN stainless steel,” *J. Nucl. Mater.* 282 (2000) 131-136.

E. A. Kenik, “Application of Analytical Electron Microscopy in Radiation Damage Studies,” *J. Nucl. Mater.* 216 (1994) 157-69.

E. A. Kenik, R. H. Jones, and G. E. C. Bell, “Irradiation-Assisted Stress Corrosion Cracking,” *J. Nucl. Mater.* 212-215 (1994) 52-59.

E.A. Kenik, “Elemental Inhomogeneities Developed in Stainless Steels by Radiation-Induced Segregation,” *J. Nucl. Mater.* 205 (1993) 317-323.

G.E.C. Bell, T. Inazumi, and E.A. Kenik, “Electrochemical and Microstructural Characterization of an Austenitic Stainless Steel Irradiated by Heavy Ions at 515°C,” *J. Nucl. Mater.* 187 (1992) 170-79.

E.A. Kenik, “Application of Analytical Electron Microscopy to Studies of Equilibrium and Non-equilibrium Segregation in Materials,” Proc. 50th Ann. Mtg. Electron Microscopy Society of America, G. W. Bailey, J. Bentley, and J. A. Small, Eds., San Francisco Press, San Francisco, CA (1992) pp. 1214-1215.

E.A. Kenik, “Comparison of Thermally- and Irradiation-Induced Grain Boundary Segregation in Austenitic Stainless Steels,” Structure and Properties of Interfaces in Materials, MRS Symp. Proc. 238, W.A.T. Clark, U. Dahmen, and C.L. Briant, Eds., Materials Research Society, Pittsburg, PA, 1992, pp. 457-62.

G. E. C. Bell, P. F. Tortorelli, E. A. Kenik, and R. L. Klueh, “An Investigation of Sensitization Behavior of Fe-Mn-Cr Austenitic Steels,” *J. Nucl. Mater.* 179-181 (1991) 615-18.

E. A. Kenik, T. Inazumi, and G. E. C. Bell, “Radiation-Induced Grain Boundary Segregation and Sensitization of a Neutron-Irradiated Austenitic Stainless Steel,” *J. Nucl. Mater.* 183 (1991) 145-53.

T. Inazumi, G. E. C. Bell, E. A. Kenik, and K. Kiuchi, “Evaluation of Radiation-Induced Sensitization of Austenitic Stainless Steels Using Electrochemical Potentiokinetic Reactivation Technique,” *Corrosion* (1990) 786-792.

E. A. Kenik, “Analytical Electron Microscopy Studies of Radiation Damage,” *Met. Trans.* A 20 (1989) 2663-2671.

E. A. Kenik, “Measurement of Equilibrium and Nonequilibrium Segregation by X-ray Microanalysis,” Materials Problem Solving with the Transmission Electron Microscope, MRS Symp. Proc. Vol. 62, L. W. Hobbs, K. H. Westmacott, and D. B. Williams, Eds., Materials Research Society, Pittsburgh, PA, 1986, pp. 209-216.

E. A. Kenik and E. H. Lee, “Radiation Damage and Phase Instability in Irradiated Stainless Steel,” Proc. 41st Ann. Mtg. Electron Microscopy Society of America, G. W. Bailey, Ed., San Francisco Press, Inc., San Francisco, CA (1983), pp. 234-35.

E. H. Lee, A. F. Rowcliffe, and E. A. Kenik, “Effect of Silicon and Titanium on Phase Stability and Swelling Behavior of AISI 316 Stainless Steel,” *J. Nucl. Mater.* 83 (1979) 79-89.

E. A. Kenik, “The Influence of Helium on Microstructural Evolution in an Ion-Irradiated Low-Swelling Stainless Steel,” *J. Nucl. Mater.* 85&86 (1979) 659-663.

E. A. Kenik, “Solute Segregation in Stainless Steel under Irradiation,” Proc. 35th Ann. Mtg. Electron Microscopy Society of America, G. W. Bailey, Ed., Claitor's Publishing Division, Baton Rouge, LA (1977), pp. 46-47.

E. A. Kenik, “Simulation of Radiation Damage and Stability in 316 Stainless Steel,” *Trans. ANS*

27 (1977) 275.

E. A. Kenik, “Radiation-Induced Solute Segregation in a Low-Swelling 316 Stainless Steel,” *Scripta Met*. 10 (1976) 733-738.

L. L. Horton and W. A. Jesser, "A Study of Radiation Damage Produced in Thinned Specimens of 316 Stainless Steel by Energetic Helium Ions," Effects of Radiation on Materials, STP 725, D. Kramer, H. R. Brager, and J. S. Perrin, Eds., American Society For Testing And Materials, Philadelphia, PA, 1981, pp. 642-653.

L. L. Horton, A Transmission Electron Microscope Study of Fusion Environment Radiation Damage in Iron and Iron-Chromium Alloys, Ph. D. Thesis, University of Virginia (May 1982); also ORNL/TM-8303, Oak Ridge National Laboratory Report (1982).

L. L. Horton, "Experimental Determination of the Critical Cavity Radius in Fe-10% Cr for Ion Irradiation," Proc. 42nd Ann. Mtg. Electron Microscopy Society of America, G. W. Bailey, Ed., San Francisco Press, San Francisco, CA, 1984, pp. 484-485.

L. L. Horton and J. Bentley, "Swelling Behavior of a Simple Ferritic Alloy," Ferritic Steels in Nuclear Technologies, J. W. Davis and D. J. Michel, Eds., The Metallurgical Society of American Institute of Mechanical Engineers, Warrendale, PA, 1984, pp. 569-578.

L. L. Horton and L. K. Mansur, "Experimental Determination of the Critical Cavity Radius in Fe-10% Cr for Ion Irradiation," Effects of Radiation on Materials, STP 870, American Society for Testing and Materials, Philadelphia, PA, 1985, pp. 344-362.

L. L. Horton and J. Bentley, "Dislocation Evolution in Fe-10% Cr," Radiation-Induced changes in Microstructure, STP 955, F. A. Garner, N. H. Packan, and A. S. Kumar, Eds., American Society for Testing and Materials, Philadelphia, PA, 1987, pp. 466-477.

P. M. Rice and R. E. Stoller, “Correlation of Nanoindentation and Conventional Mechanical Property Measurements,” Fundamentals of Nanoindentation and Nanotribology II, Vol. 649, S. P. Baker, R. F. Cook, S. G. Corcoran, and N. R. Moody, Eds., Materials Research Society, Pittsburgh, PA, 2000, pp. 7.11.1-7.11.6.

P. M. Rice and R. E. Stoller, “The Effect of Solutes on Defect Distributions in Ion-Irradiated Model LWR Pressure Vessel Steels,” *J. Nucl. Mater.* 244 (1997) 219-226.

E. Kuramoto, N. Yoshida, N. Tsukuda, K. Kitajima, N. H. Packan, M. B. Lewis, and L. K. Mansur, "Simulation Irradiation Studies on Iron," J. Nucl. Mater. 103 & 104 (1981) 1091-1096.

L. K. Mansur and M. H. Yoo, "Advances in the Theory of Swelling in Irradiated Metals and Alloys," J. Nucl. Mater. 85 & 86 (1979) 523-532.

Ceramics

S. J. Zinkle, "Microstructural Characterization of Al_2O_3 Following Simultaneous Triple Ion Bombardment,” Processing and Characterization of Materials Using Ion Beams, MRS Symp. Proc. 128, L. E. Rehn, J. Greene and F. A. Smidt, Eds. Materials Research Society, Pittsburgh, PA, 1989, pp. 363-368.

S. J. Zinkle, "Ion Irradiation Studies of Oxide Ceramics,” Structure-Property Relationships in Ion-Beam Surface-Modified Ceramics, C. J. McHargue et al., Eds., NATO Advanced Study Institute Series E, Applied Sciences, Vol. 170, Kluwer Academic Publ., Dordrecht, The

Netherlands, 1989, pp. 219-229

S. J. Zinkle and S. Kojima, "Helium-Assisted Cavity Formation in Ion-Irradiated Ceramics," *J. Nucl. Mater.* 179-181 (1991) 395-398.

L. L. Horton, J. Bentley, and M. B. Lewis, "Radiation Damage in Ion-Irradiated MgO," *Nucl. Instrum. Meth. Phys. Res. B* 16 (1986) 221-229.

William R. Allen and Eal H. Lee, "Characterization of Diamond Amorphized by Ion Implantation," Mat. Res. Soc. Symp. Proc. 279 (1993) 333-338.

W. R. Allen and S. J. Zinkle, "Lattice Location and Clustering of Helium in Ceramic Oxides," *J. Nucl. Mater.* 191-194 (1992) 625-629.

S. J. Zinkle, "Microstructure of Ion-Irradiated Oxide Ceramic Insulators," *Nucl. Instr. Meth. B* 91 (1994) 234-246.

S. J. Zinkle and L.L. Snead, "Influence Of Irradiation Spectrum and Implanted Ions on the Amorphization Of Ceramics," *Nucl. Instr. Meth. B* 116 (1996) 92-101.

S. J. Zinkle, "Irradiation Spectrum and Ionization Induced Diffusion Effects in Ceramics," Microstructure Evolution During Irradiation, I. M. Robertson, G. S. Was, L. W. Hobbs and T. Diaz de la Rubia, Eds., MRS Symp. Proc. 439, Materials Research Society, Pittsburgh, 1997, pp. 667-678.

Polymers

E. H. Lee, M. B. Lewis, P. J. Blau and L. K. Mansur, "Improved Surface Properties of Polymer Materials by Multiple Ion Beam Treatment," *J. Mater. Res.* 6 (1991) 610-628.

E. H. Lee, G. R. Rao, and L. K. Mansur, "LET Effect on Cross-linking and Scission Mechanisms of PMMA During Irradiation," *Radiation Physics and Chemistry* 55 (1999) 293-305.

E. H. Lee, G. R. Rao, and L. K. Mansur, "Hardness Enhancement and Crosslinking Mechanisms in Polystyrene Irradiated with High Energy Ion-Beams," *Materials Science Forum* 248-249 (1997) 135-146.

E. H. Lee, G. R. Rao and L. K. Mansur, "Super-Hard-Surfaced Polymers by High Energy Ion-Beam Irradiation," *Trends in Polymer Science* 4 (1996) 229-337.

E. H. Lee, G. R. Rao and L. K. Mansur, "Ion-beam Surface Modification of Polymers for Biomedical Applications," Proceedings of the Conference on *Surfaces in Biomaterials, 1995,* pp. 165-170.

E. H. Lee and L. K. Mansur, "Super-Hard Surfaced Polymers by Ion-Beam Processing," *Materials Technology* 9 (1994) 233-234.

E. H. Lee, G. R. Rao, M. B. Lewis, and L. K. Mansur, "Effects of Electronic and Recoil Processes in Polymers During Ion Implantation," *J. Mater. Res.* 9 (1994) 1043-1050.

M. B. Lewis, E. H. Lee, L. K. Mansur and W. A. Coghlan, "Homogeneous Reaction Rate Model for Hydrogen Production from Ion Irradiated Polymers," *J. Nucl. Mater.* 208 (1994) 61- 72.

G. R. Rao, E. H. Lee and L. K. Mansur, "Wear Properties Of Argon Implanted Poly(Ether Ether Ketone)," *Wear* 174 (1994) 103-109.

G. R. Rao, E. H. Lee, and L. K. Mansur, "Structure and Dose Effects on Ion Beam Modification of Polymers," MRS Symp. Proc. 239, "Thin Films - Stresses and Mechanical Properties III," W. D. Nix, J. C. Braveman, E. Arzt, and L. B. Freund, Eds., Materials Research Society, Pittsburg, PA, 1992, pp. 189-194.

E. H. Lee, G. R. Rao, and L. K. Mansur, "Improved Hardness and Wear Properties of B-Implanted Polycarbonate," *J. Mater Res.* 7 (1992) 1900-1911.

E. H. Lee, Y. Lee, W. C. Oliver, and L. K. Mansur, "Hardness Measurements of Ar^+-Beam Treated Polyimide by Depth-Sensing Nanoindentation," *J. Mater. Res.* 8 (1993) 377-387.

E. H. Lee, D. M. Hembree, Jr., G. R. Rao, and L. K. Mansur, "Raman Scattering from Ion Implanted Diamond, Graphite, and Polymers," *Phys. Rev.* B48 (1993) 15,540-15,551.

E. H. Lee, G. R. Rao, M. B. Lewis, and L. K. Mansur, "Ion Beam Application for Improved Polymer Surface Properties," *Nucl. Inst. Meth. B* 48 (1993) 326-330.

G. R. Rao, E. H. Lee, and L. K. Mansur, "Structure and Dose Effects on Improved Wear Properties of Ion Implanted Polymers," *Wear* 162-164 (1993) 739-747.

M. B. Lewis and E. H. Lee, "Residual Gas and Ion Beam Analysis of Ion-Irradiated Polymers," *Nucl. Instr. Meth. Phys. Res. B* 61 (1991) 457-465.

M. B. Lewis and E. H. Lee, "Chemical G-Values of Ion-Irradiated Polymers," *Nucl. Instr. Meth. Phys. Res. B* 69 (1992) 341-348.

G. R. Rao, Z. L. Wang, and E. H. Lee, "Microstructural Effects on Surface Mechanical Properties of Ion Implanted Polymers," *J. Mater. Res.* 8 (1993) 927-933.

M. B. Lewis and E. H. Lee, "G-Values for Gas Production from Ion-Irradiated Polystyrene," *J. Nucl. Mater.* 203 (1993) 224-232.

G. R. Rao, K. Monar, E. H. Lee and J. Treglio, "Metal Ion Implantation Effects on Surface Properties of Polymers," *Surface and Coatings Technology* 64 (1994) 69-74.

M. B. Lewis, E. H. Lee, and G. R. Rao, "Recoil Effects on Chemical G-Values during Ion Irradiation of Polystyrene," *J. Nucl. Mater.* 211 (1994) 46-51.

G. R. Rao, E. H. Lee, R. Bhattacharya and A. W. McCormick, "Wear properties of high energy ion-implanted polycarbonate," *J. Mater. Res.* 10(1) (1995) 190-201.

G. R. Rao, E. H. Lee. X. Yao, and I. G. Brown, "Wear properties improvements in polypropylene by metal ion implantation," *J. Mater. Sci.* 30 (1995) 3903-3908.

G. R. Rao, P. J. Blau, and E. H. Lee, "Friction Microprobe Studies of Ion Implanted Polymer Surfaces," *Wear* 184 (1995) 213-222.

G. R. Rao, L. Riester, and E. H. Lee, "Depth Dependent Hardness Improvements in Ion Irradiated Polymers," Mat. Res. Soc. Symp. Proc. 345 (1995) 363-368.

E. H. Lee, G. R. Rao, and L. K. Mansur, “Ion-Beam Surface Modification of Polymers for Biomedical Applications,” Proc. Surfaces in Biomaterials ‘95, Minneapolis, MN, Surfaces in Biomaterials Foundation (1995) 165.

E. H. Lee, "Ion-Beam Modification of Polyimide," Chapter 17 in "Polyimide: Fundamental Aspects and Technological Applications," K. Mittal and M. Ghosh, Eds., Marcel Dekker, New

York (1996) 471-503.

Gopal Rao and Eal H. Lee, “Effects of sequential He+ and Ar+ implantation on surface properties of polymers, *J. Mater. Res.* 11 (10) (1996) 2661-2667.

E. H. Lee, “Ion-Beam Modification of Polymeric Materials - Fundamental Principles and Applications,” *Nucl. Instr. Meth. Phys. Res. B 151* (1999) 29-41.

Specimen Preparation

E. H. Lee and A. F. Rowcliffe, "Multiple Sectioning and Perforation Techniques for TEM Substrate Studies," *Microstructural Science* 7 (1979) 403.

K. F. Russell and L. L. Horton, "Specimen Preparation of Near Surface Ion Irradiated Samples," Proc. 43rd Ann. Mtg. Electron Microscopy Society of America, G. W. Bailey, Ed., San Francisco Press, San Francisco, CA, 1985, pp. 170-171.