GEA Grasso heat pumps using ammonia – the megawatt range

Wolfgang Dietrich / Dr. Ole Fredrich

GEA Refrigeration Technologies / GEA Refrigeration Germany GmbH

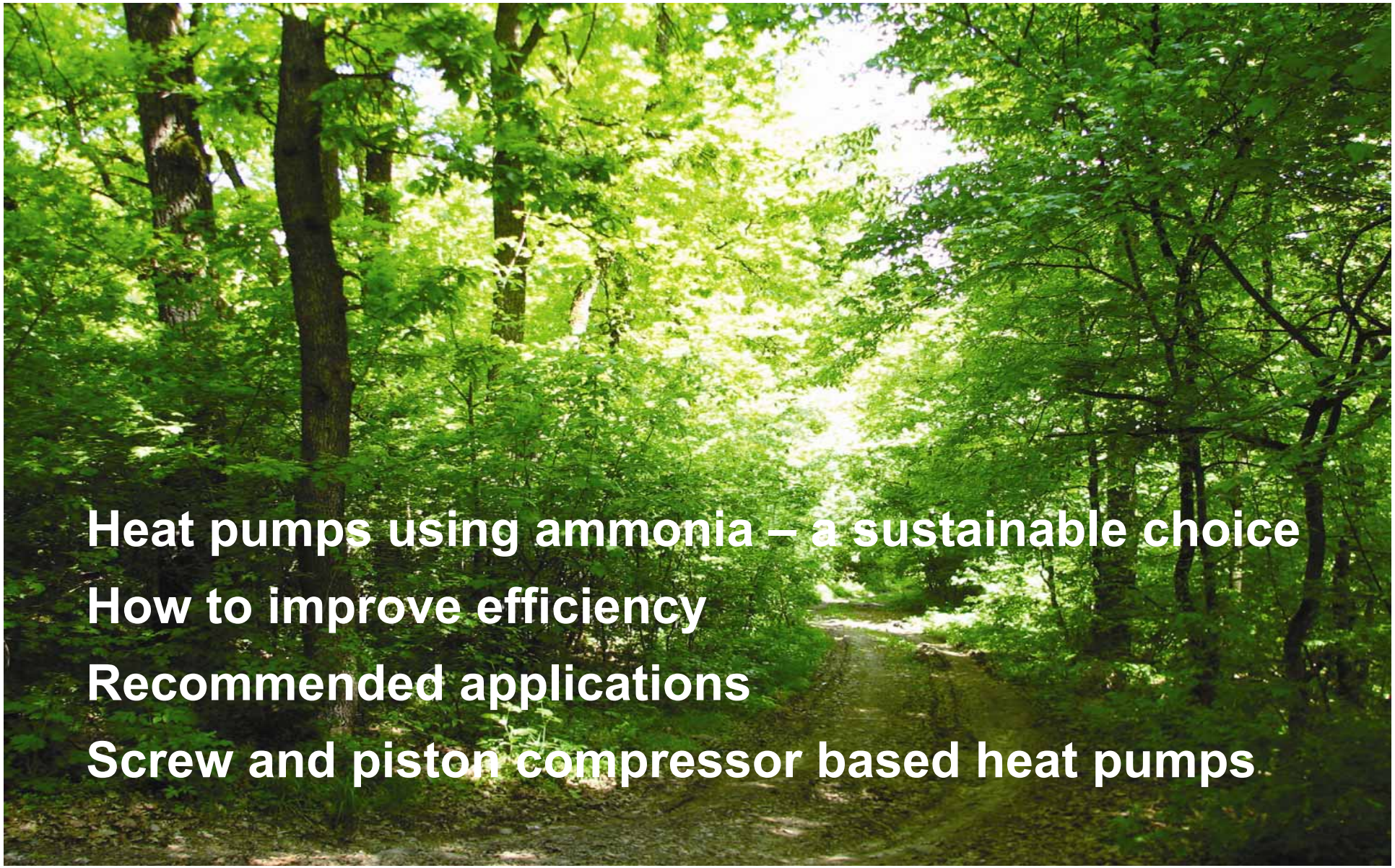

Heat pumps using ammonia – a sustainable choice

How to improve efficiency

Recommended applications

Screw and piston compressor based heat pumps

Industrial demand on heat in Germany

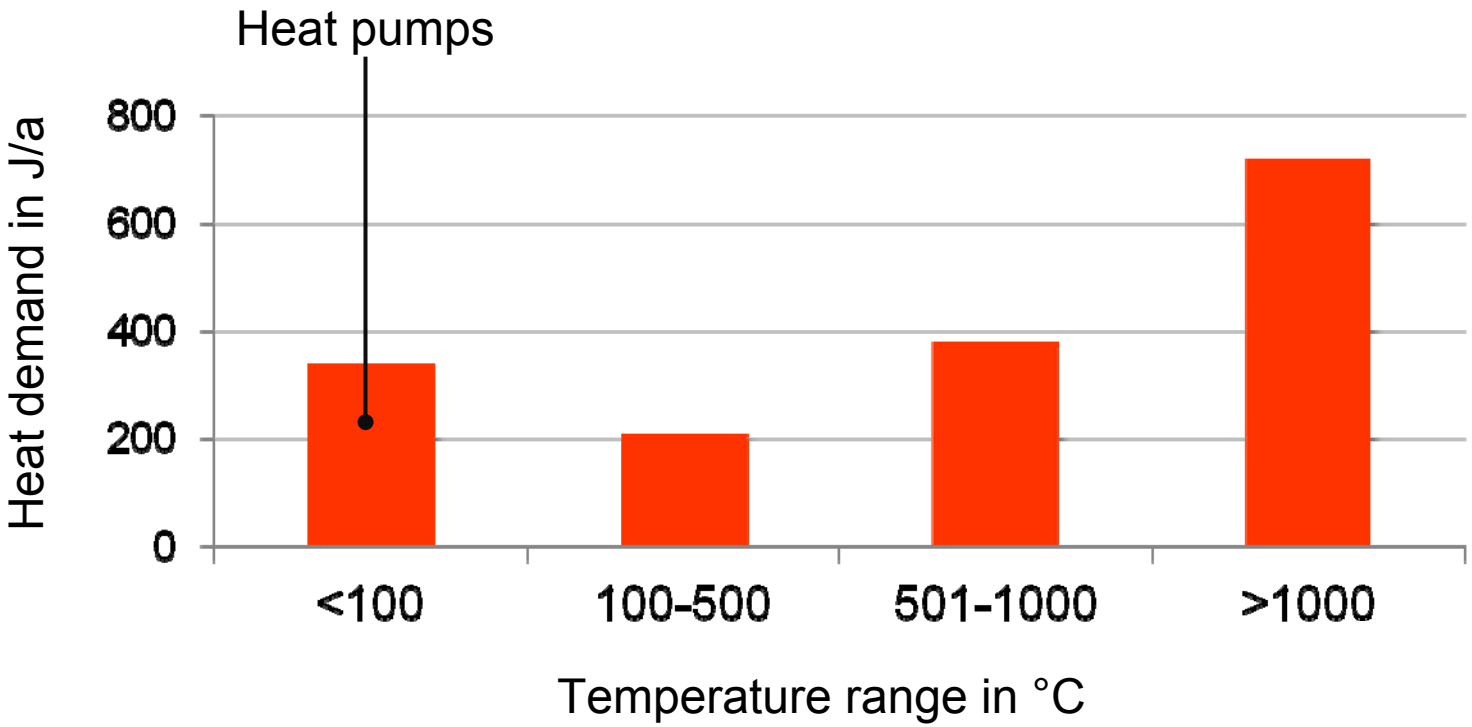

More than 90% of the energy consumed for refrigeration is wasted as heat rejected to the atmosphere

Source: Federal Statistical Office, 2003

Refrigerant: Ammonia

- Natural refrigerant without environmental pollution
  - Ozone deflation potential (ODP) = 0, Global warming potential (GWP) = 0
- Wide operating area
  - Temperature at critical point = 132 °C
- Good thermodynamical properties
  - High economic viability
- Coefficient of perfomance

t_c / °C	Carnot	R717	R134a	R407C
45	8.0	**6.8**	6.2	6.3
60	6.1	**5.0**	4.5	4.3
75	5.0	**3.9**	3.2	3.0
80	4.7	**3.6**	3.0	2.7

Efficient & environmental friendly

Refrigerant data for heat pumps

*	COP	kJ/m³	NKP	t_{25}	t_{50}	t_{crit}	ODP	GWP
R507	3.95	3553	-47.3	54.1	68	72.8	0	3900
R404A	4.01	3506	-46.7	55.1	69.4	72	0	3800
R410A	4.17	5150	51.7	42.9	67.4	69.6	0	2000
R407C	4.45	3410	-43.9	57.1	82.9	86	0	1700
R134A	4.6	2265	-26.2	79.3	98.6	101	0	1300
R22	4.62	3677	-40.9	63.1	93.4	96	0,05	1700
R717	4.82	4241	-33.5	59.6	89.7	132.3	0	0
R600	4.89	898	-0.5	129.1	148.1	152	0	20

* Calculated with ASEREP32

Conditions: to: 0 °C, tc: 55 °C, toh: 15K

Type of use chiller & heat pump

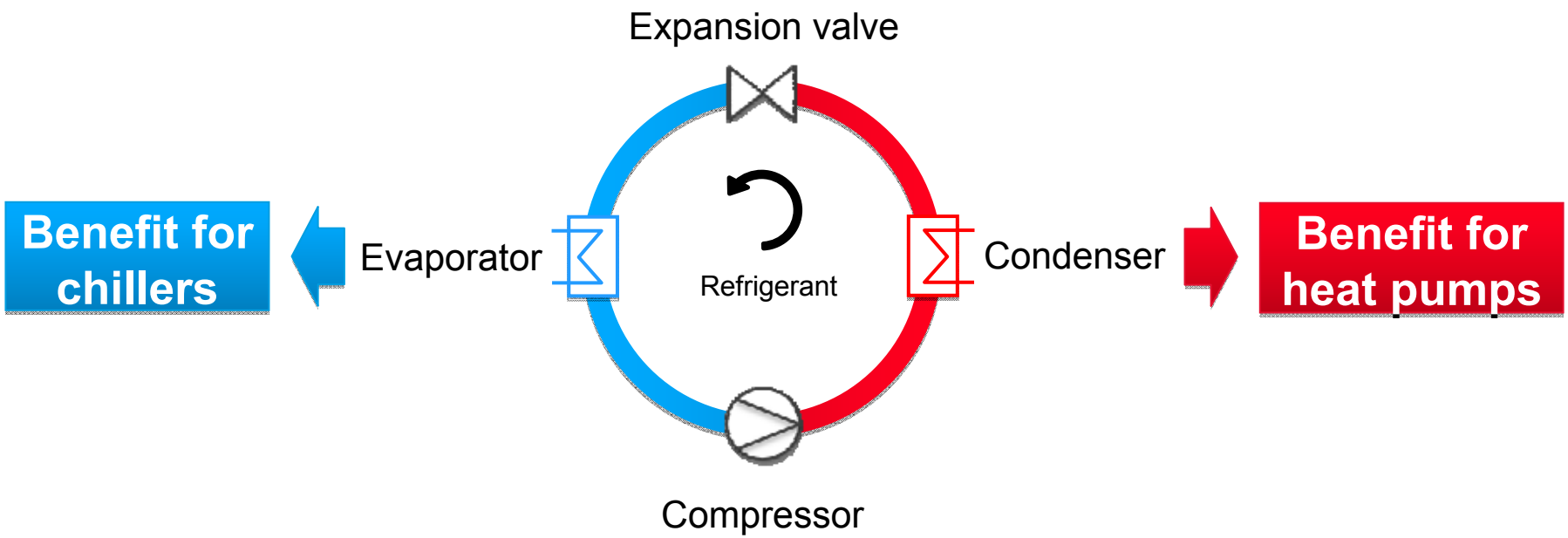

Heat sink of heat pumps

Heat source:
Dependant
on location
and usage

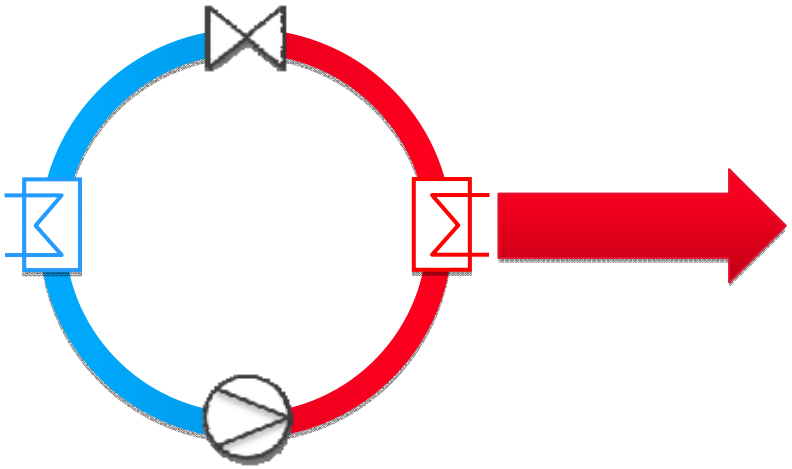

Heat sink
dedicated

- Heat sink (dedicated)
- hot water heating is large (20 K)
- Hot water flow is little
- Desuperheating and subcooling of note
- Hot water out > condensing temperature possible

Special heat exchanger concepts required

Single stage heat pump – principle

Condenser heats the water

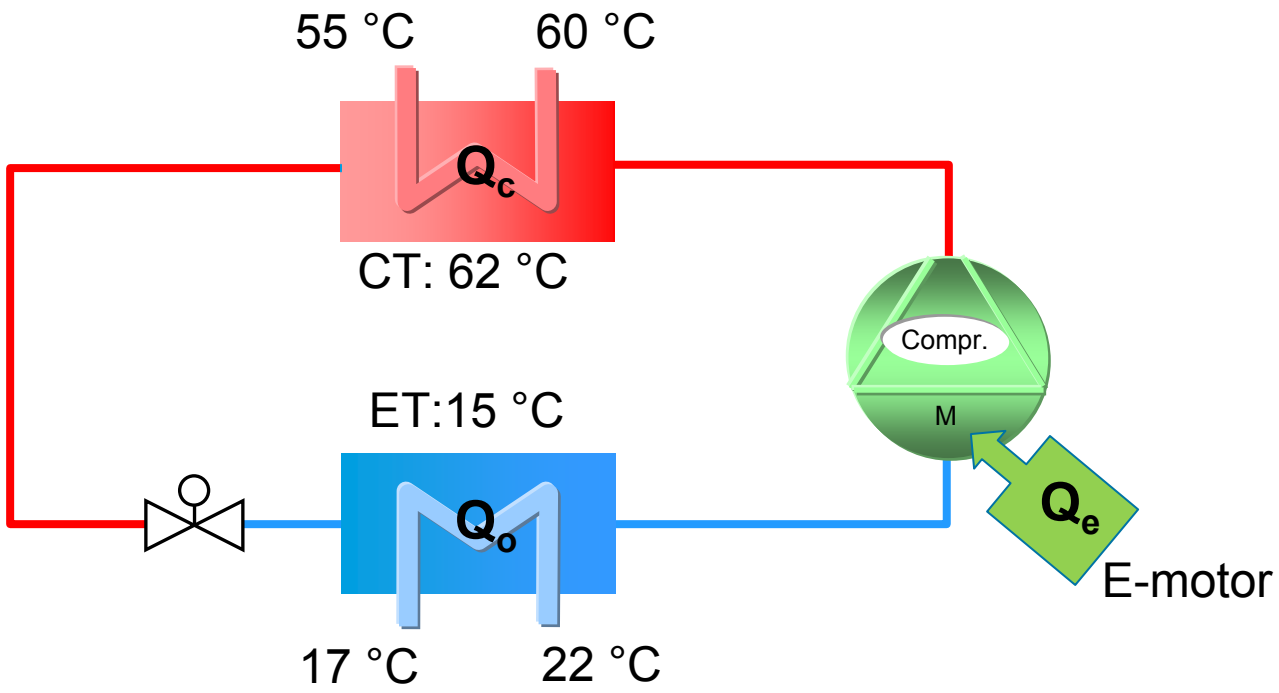

Evaporator cools the water

Single stage heat pump – a “combined system”

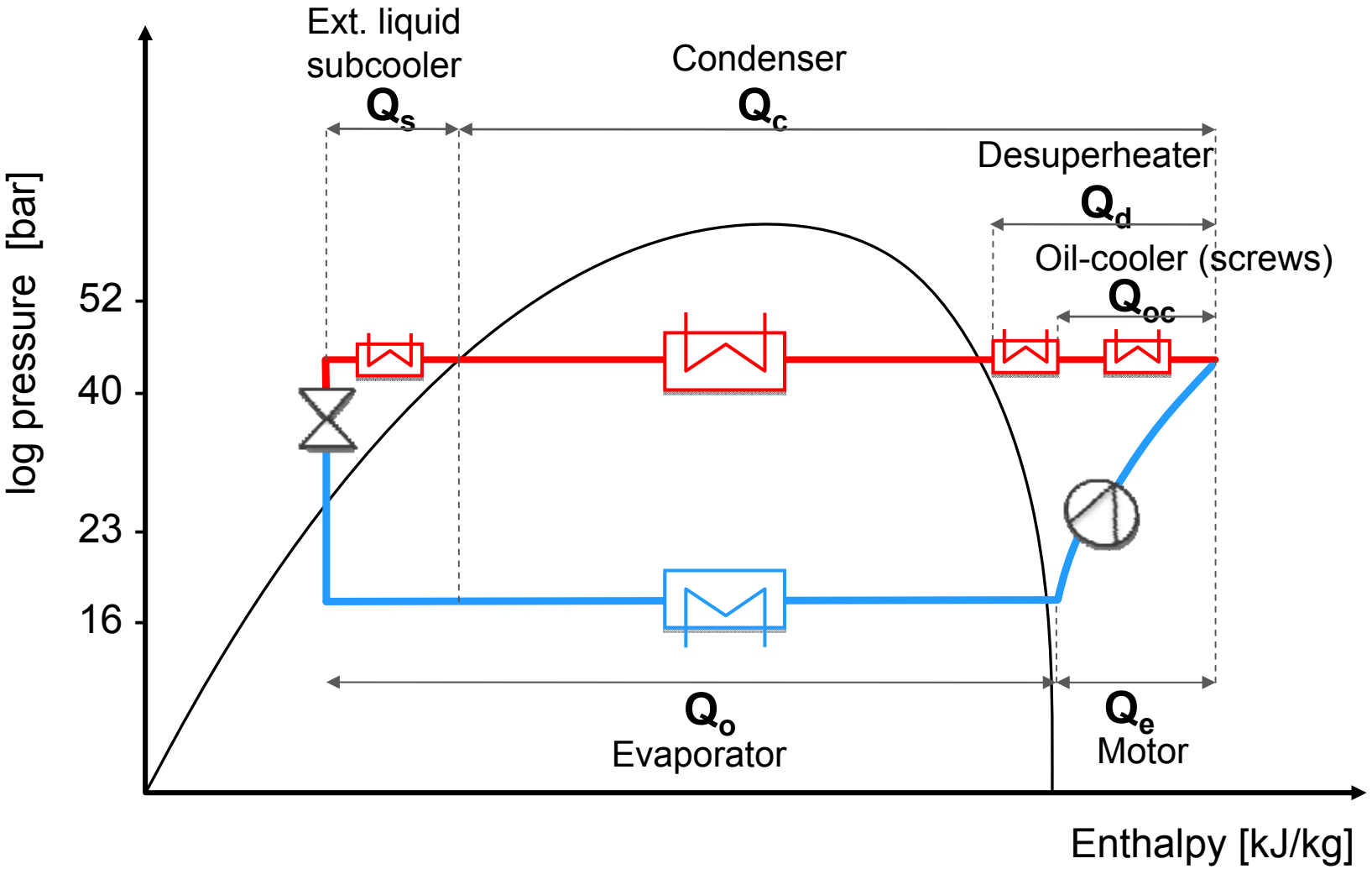

Single stage heat pump

Single stage heat pump with low temperature increase <10 °C

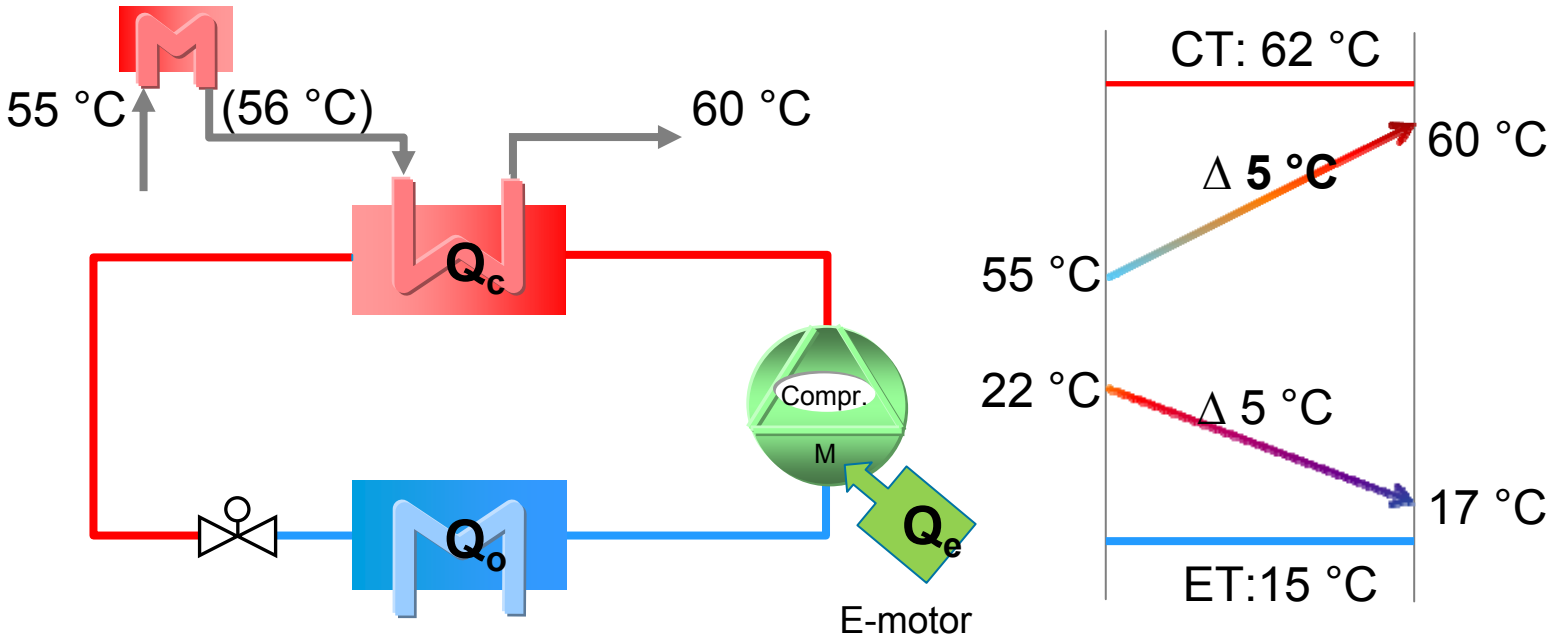

Single stage heat pump

Single stage heat pump with a large temperature increase 10 to 25 °C and high leaving temperature >75 °C

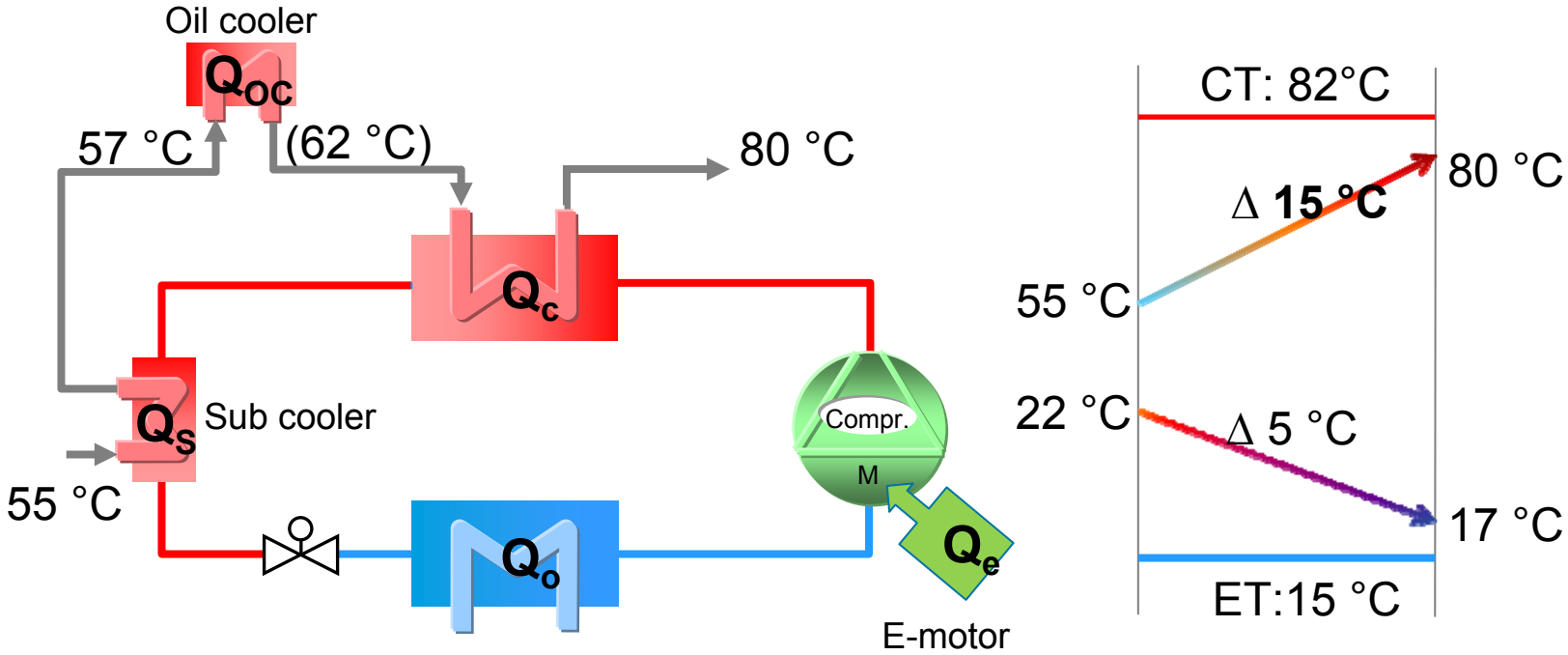

Consider to use heat from subcooler + oil cooler in series with condenser.

At lower demands consider only oil cooler and/or in parallel with condenser

Single stage heat pump

Single stage heat pump with a large temperature increase >25 °C and high leaving temperature >80 °C

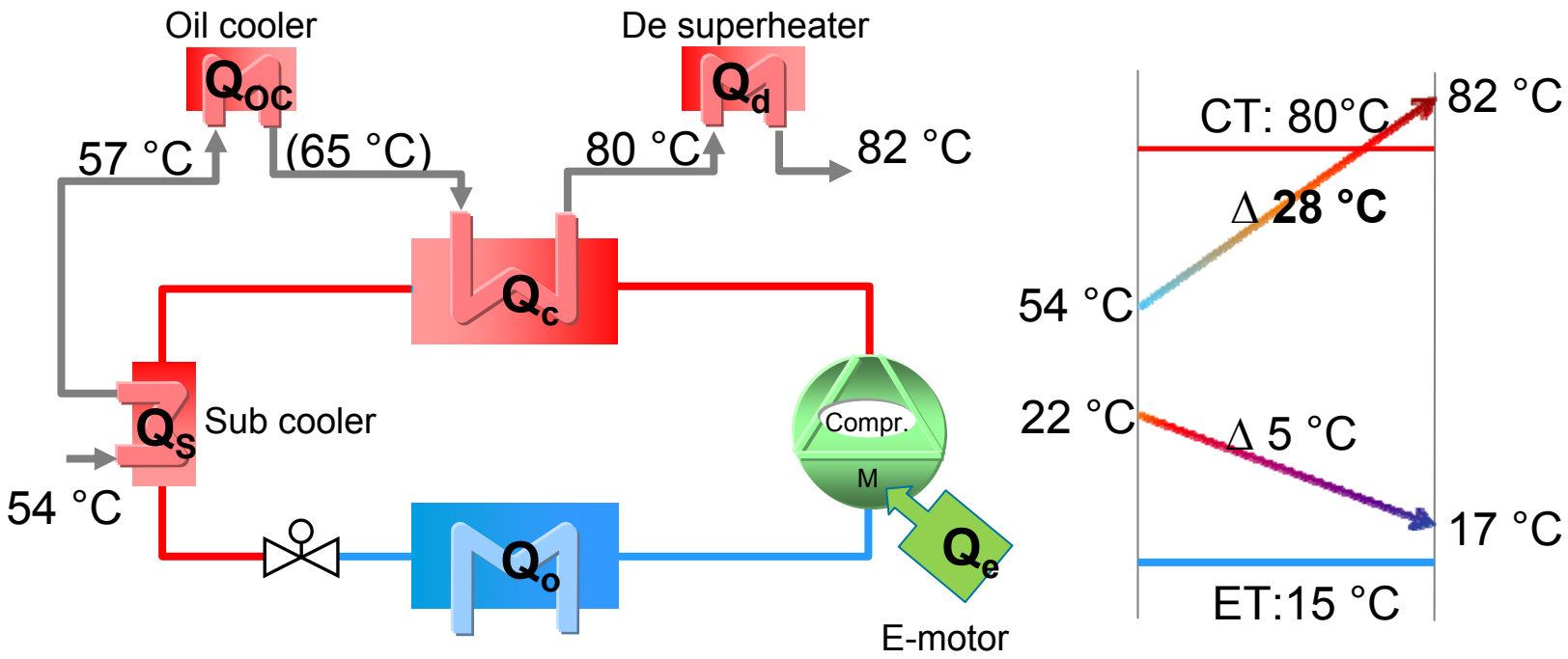

Consider to use heat from subcooler + oil cooler + desuperheater in series.

At lower demands consider only oil cooler and in parallel with condenser

Add on heat pump – the first choice

Technical requirements

- Cold and hot side dedicated
- Temperature at cold and hot side according application (constant)
- Big temperature hub in total (constant)
- Multi stage refrigeration plant

Requirements on usage

- Simultaneous demand on heating and cooling capacity
- Priority of cooling or heating

Challenges

- Summer and winter operation
- Part load

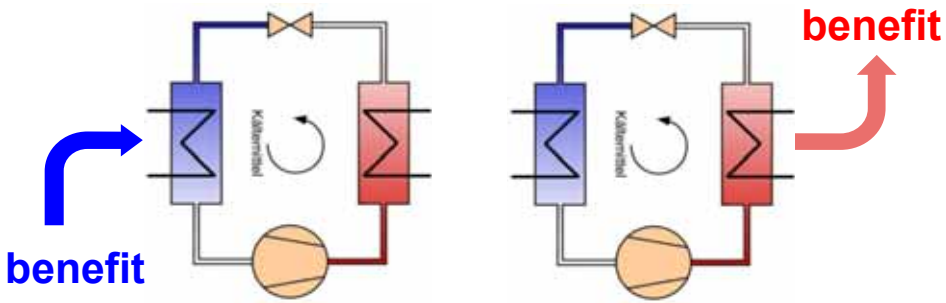

Add on heat pump – occasions on efficiency

Influence of intermediate temperature on COP

- Settings: 6 °C cold water, t_0: 2 °C; 80 °C hot water, t_C: 84 °C;
  1 MW heating capacity

Intermediate temperature in °C	EER	COP_{HP-WP}	COP_{C+HP}	ΔCOP_{C-HP} in %
25	8.21	2.08	4.32	0
46	3.87	3.63	4.75	+10

Total COP is influenced by the intermediate temperature

Suitable applications: Using waste heat

- Pasteurization process in the dairy industry
- Hot water supply for industrial processes and for cleaning/scalding activities in slaughterhouses
- De-feathering in poultry plants
- Horticulture using green houses
- Sport facilities with combined need for heat or cold (ice rink/swimming pools)

In Germany:

Demand on process heat approx. 65 % of total energy consumption

Approx. 90% of the energy for refrigeration is waste heat

Estimated: 25% could be reused by heat pumps

GEA Grasso chiller – cooling and heating within one range

Heat pumps in greenhouses

+50°C

Normal Cooling food retail

+5°C

Ice water in dairy industries

0°C

Ice rinks

-16°C

Freezing food retail

-25°C

Cooling storage for food

-35°C

Freezing for food stuffs

-54°C

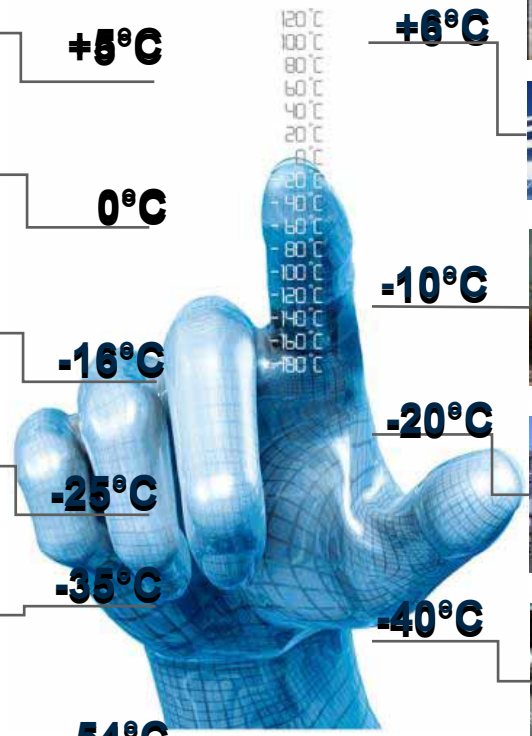

+70°C

Heat pumps for energy savings

+21°C

Bus & Rail AC

+6°C

HVAC for buildings

-10°C

Process cooling for breweries

-20°C

Process cooling for chemical and pharma

-40°C

R&D freezing solutions for food

Overview “ready to operate“ solutions (platform)

Hot water outlet temperature

+88-90 °C
63 bar
Extended 52 bar version
Government subsidized R&D project

Customized screw chillers **+80 °C**
Single/two stage **52 bar**
Fully welded PHE shell & tube

+78 °C
50 bar
Customized piston chillers
Single/two stage
Fully welded PHE

Standard screw chillers **+52 °C**
Semi welded PHE **28 bar**

+47 °C
25 bar
Standard piston chillers
Semi welded PHE

Operating limits for 52 bar heat pump screw compressor

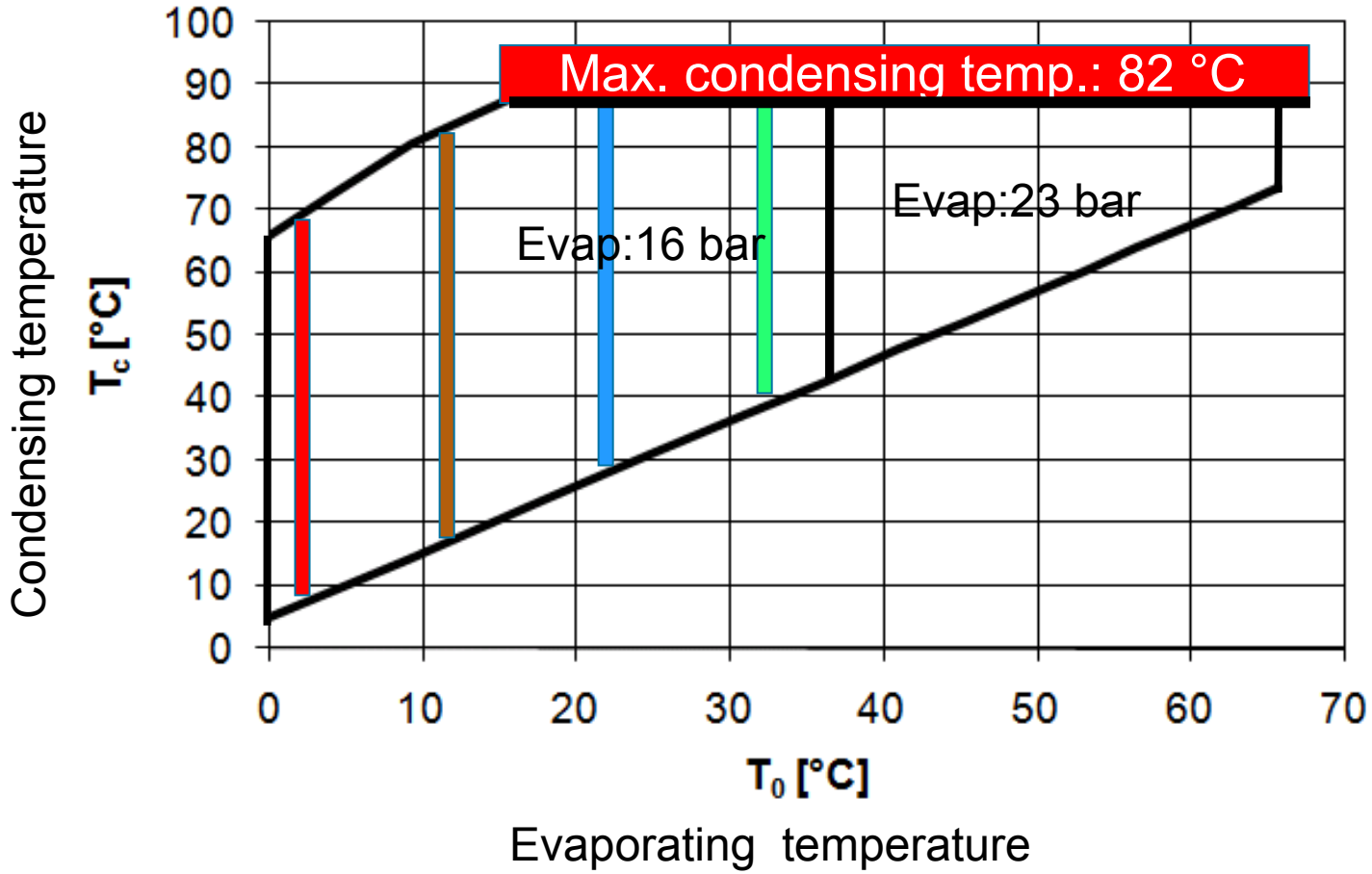

GEA Grasso compressor range for heat pumps

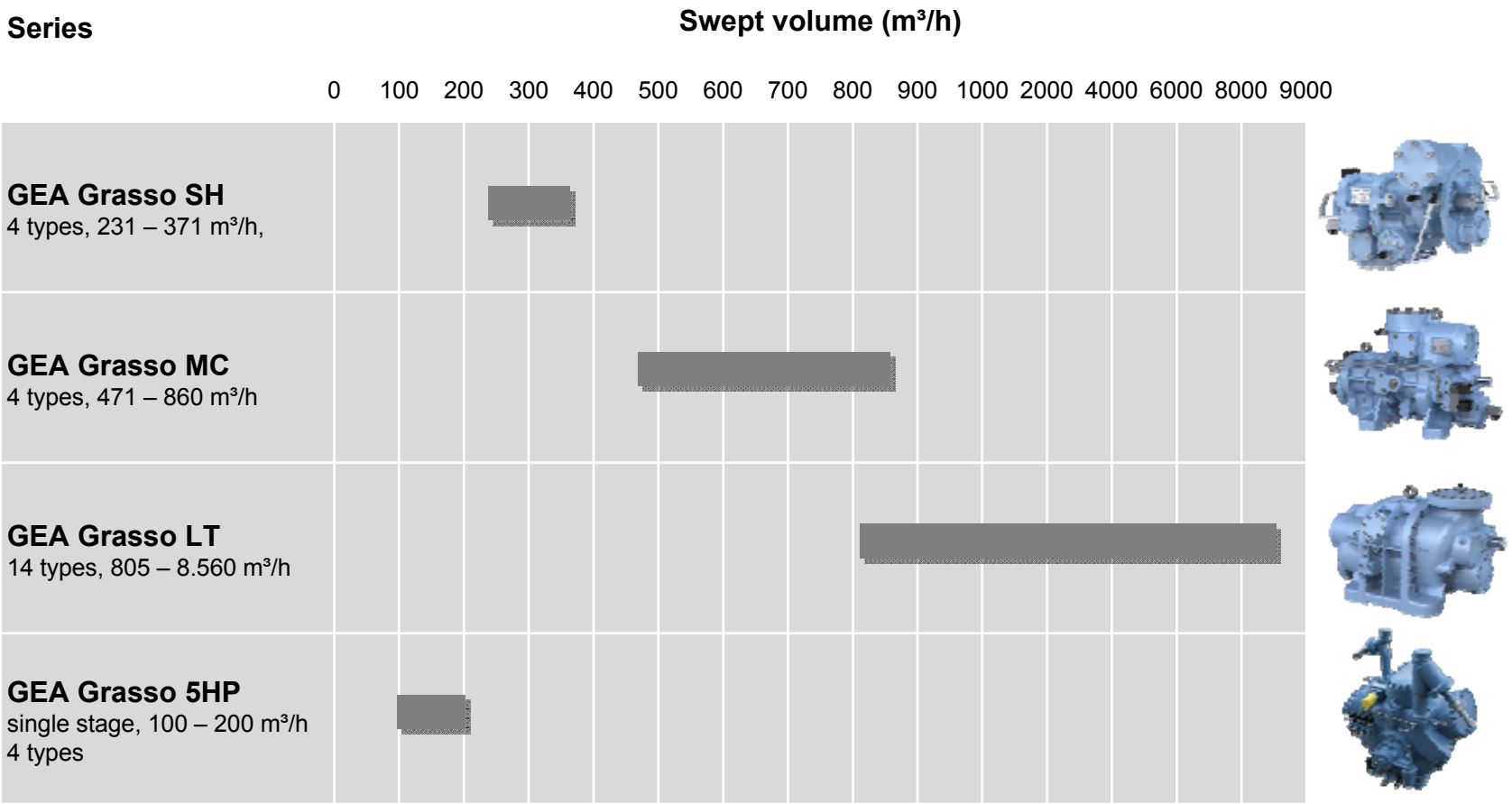

GEA Grasso heat pump screw compressors (52 bar) – available examples

GEA Grasso screw compressor type	V_{geo} m³/ h	Q_{Heat}* kW	P_{Shaft} kW	COP_{Heat}
ER-C25T	231	684	165	4.1
HR-E24T	321	975	228	4.3
MR-H24T	471	1497	336	4.5
RR-M25T	690	2199	493	4.5
VR-R23T	1040	3429	721	4.8
ZR-V22T	1740	5775	1142	5.1
XB-Z24T	2748	9004	1734	5.2
XE-XB21T	4150	14080	2838	5.0

* Operation at: NH_3: +35/ +80 °C, incl. economizer

GEA Grasso screw compressors: 52 bar design

Technical details

- High strength housing material:
nodular cast iron e.g. GJS-500 or GJS-400
- Stronger thrust bearing design at male rotor:
“Triax Design”
- Stronger driving shaft end if required
- High performance shaft seal
- High pressure components e.g. solenoid valve block
- Rotor shortening to manage the high bearing load if required

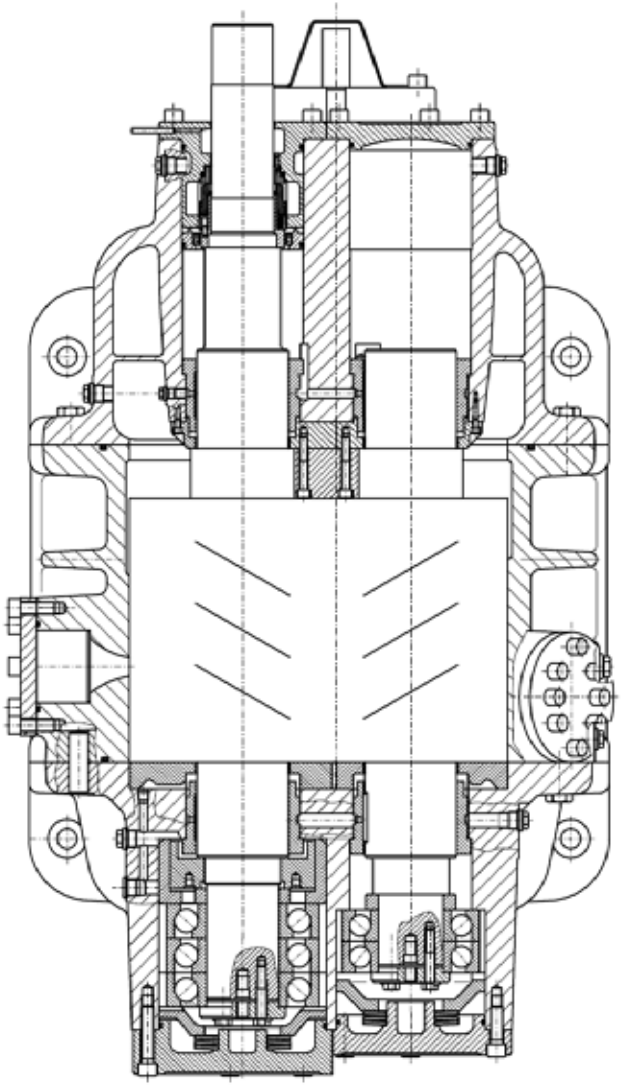

Heat pump example: Screw compressor

- **Project**: Production facility for Gelantine, Sweden
  two stage execution with shell & plate HX
- **Application**: Producing gelatine, where the process need cooling for the low pressure side and heating for the high pressure side.
- **Heating capacity**: 1365 kW, evaporating temperature -3.5 °C, condensing temperature 71.5 °C
- **Project year**: 2005

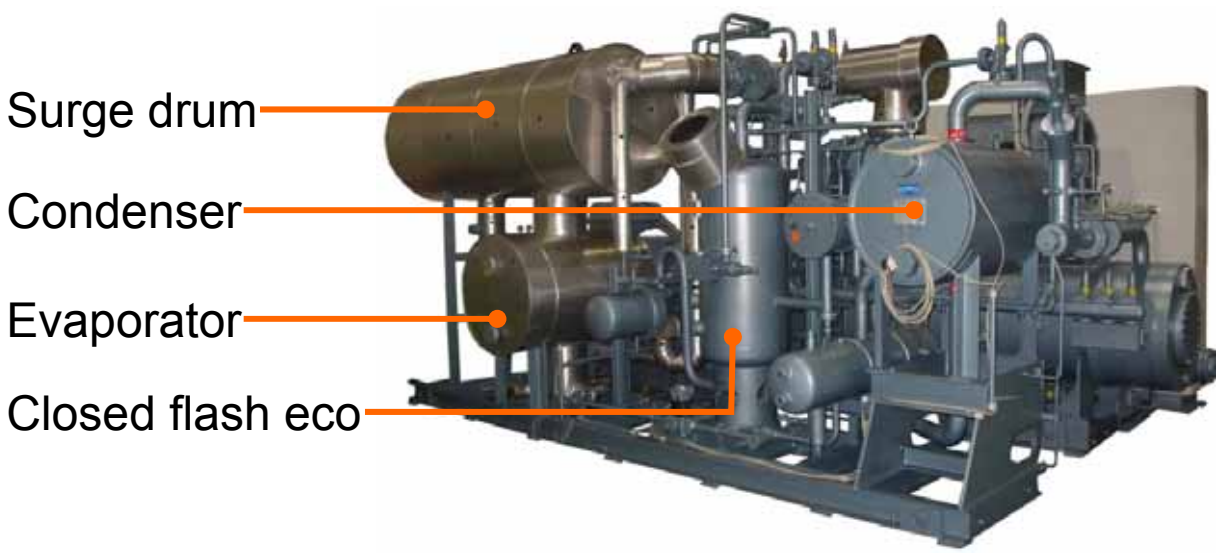

Heat pump example: Screw compressor

- **Project**: Paper mill / Norway/ type FXPP800 NH3 with variable speed drive (VSD)
- **Application**: Taking the heat from the paper-mills and heating it for a central heating system
- **Heating capacity**: 2.000 kW
- **Water**: cold side 40 °C/30 °C; hot side 60 °C/80 °C
- **Condensing temperature**: 77 °C
- **Project year**: 2010

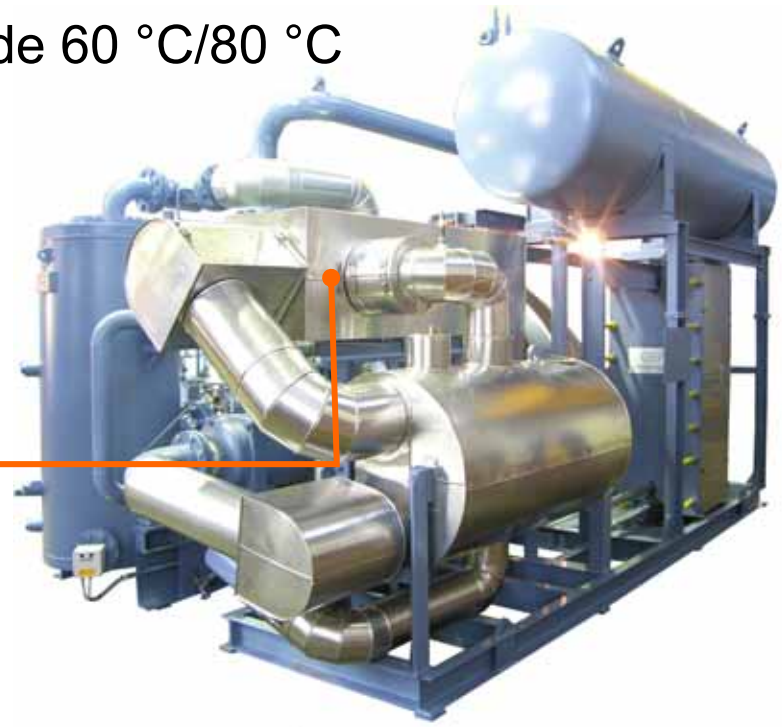

Heat pump example: Piston compressor

- Green house application
- De-superheater, condenser and sub-cooler applied
- Highest efficiency
- Approved by FAT test
- +50 °C hot water supply

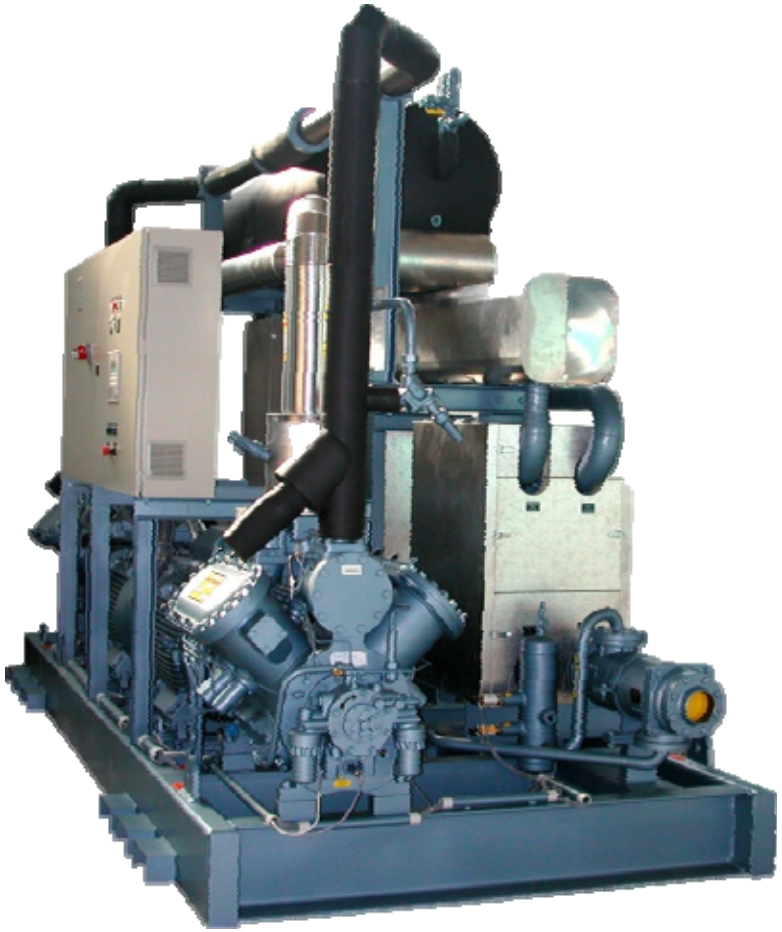

GEA

engineering for a better world

www.gea.com