EUROPEAN HEAT PUMP SUMMIT

POWERED BY CHILLVENTA

SYMPOSIUM + EXPO
NUREMBERG, 20–21.10.2015

Industrial | Commercial | Residential
Heating & Cooling | Components & Equipment

hp-summit.de

NÜRNBERG MESSE

Comparing Gas Driven Heat Pumps to Other Technologies - A Simulation Study

EUROPEAN HEAT PUMP SUMMIT

Marcello Aprile, PhD
RELAB, Dipartimento di Energia
Politecnico di Milano

Politecnico di Milano / RELAB

EUROPEAN HEAT PUMP SUMMIT

- **1st Technological University in Italy for the QS Rankings**
- **41.074 enrolled students** (2014/2015 a.y.), of which 4.583 international students
- **30 programmes, 18 PhD courses in English**
- **12 Departments, 6 Schools e 7 Campuses**
- **280 projects financed by EU**
- 463 inventions, 1109 patents

RELAB, Department of Energy

Research
- Thermally driven heating and cooling
- Absorption / Adsorption

Consulting
- Renewable & waste heat
- Monitoring of H&C plants

Testing (10 - 100 kW)
- Heat pumps & Chillers
- Domestic hot water heat pumps
- Gas fired heat pumps

Work Structure

EUROPEAN HEAT PUMP SUMMIT

- Annex 43 Task D
  - Objectives
- FSHP Model and Performance
  - Air-source Gas-driven Ammonia-Water Absorption HP 18 kW
- Benchmark for Residential Applications
  - Reference Buildings and Climates
  - Plant Schemes and Operation Strategies
  - Key Performance Indicators
- Analysis of Simulation Results
  - Impact of Plant Dimensioning, Building Class and Climate
  - Comparison with Other Technologies
- Conclusions & Next Steps

HPP Annex 43 Task D

EUROPEAN HEAT PUMP SUMMIT

Task D: “Market Potential Study and Technology Roadmap”

- Simulation-based studies
- Assess Seasonal Performances (e.g., PE, CO_2)
- Compare Different Technologies (CB, FSHP, EHP, ST)
- Account for the impact of
  - Climate,
  - Building Class
  - Country-Specific Boundary Conditions
    - Primary energy factors,
    - Emissions factors of energy carriers
    - Energy carrier prices
- Priority to Single Family Homes, EU Climate, Air-Source HPs
- We have selected TRNSYS to carry out the work

FSHP Model and Performance

EUROPEAN HEAT PUMP SUMMIT

- Gas-Driven Ammonia-Water Absorption Heat Pump
- Air-Source, Gas-Condensing (Nominal Heating Capacity 18 kW)
- Lab tested according to EN12309-6 (partial load & defrosting) [1]
- Validated TRNSYS model

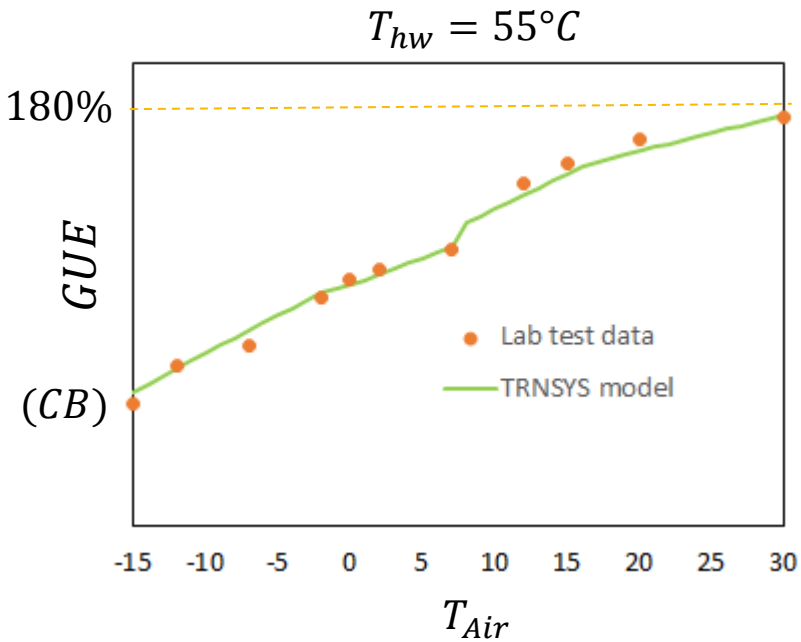

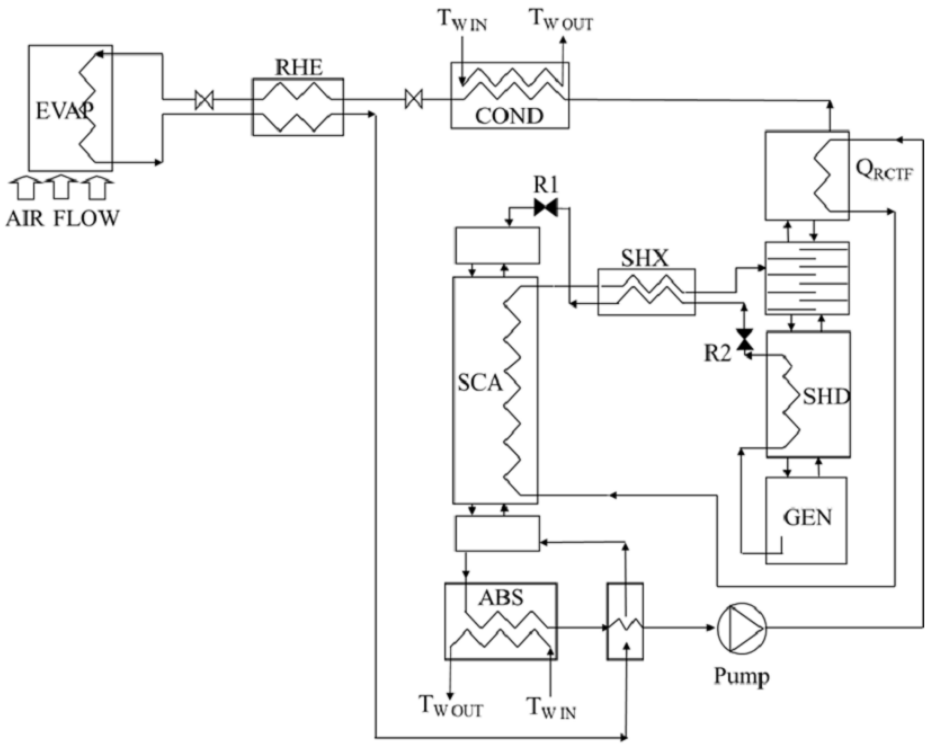

[1] ISHPC 2014 (Toppi et al., 2014) - HEAT4U project

Benchmark for Residential Applications

EUROPEAN HEAT PUMP SUMMIT

- Reference Buildings & Climates

The largest share of the building stock !

DSS Tool (Fraunhofer ISE)

Single Family Home
140 m^2 floor area [2]

Space Heating loads (kWh/m^2,y)
U-value according to building standards.

Climate	New	Med	Old
Warm (Athens)	27	51	89
Average (Strasburg)	39	87	176
Colder (Helsinki)	33	63	120
Emission system	floor	radiator	radiator

Domestic Hot Water loads [3]

- 4 persons
- 44 liters / person / day
- Typical hourly profile

[2] IEA SHC Task 44 (Dott et al., 2012)
[3] DHW Calc (Jordan & Vajen, 2003)

Benchmark for Residential Applications
Plant Schemes and Operation Strategies

EUROPEAN HEAT PUMP SUMMIT

- Air-source Gas Absorption Heat Pump + Condensing Boiler (optional)

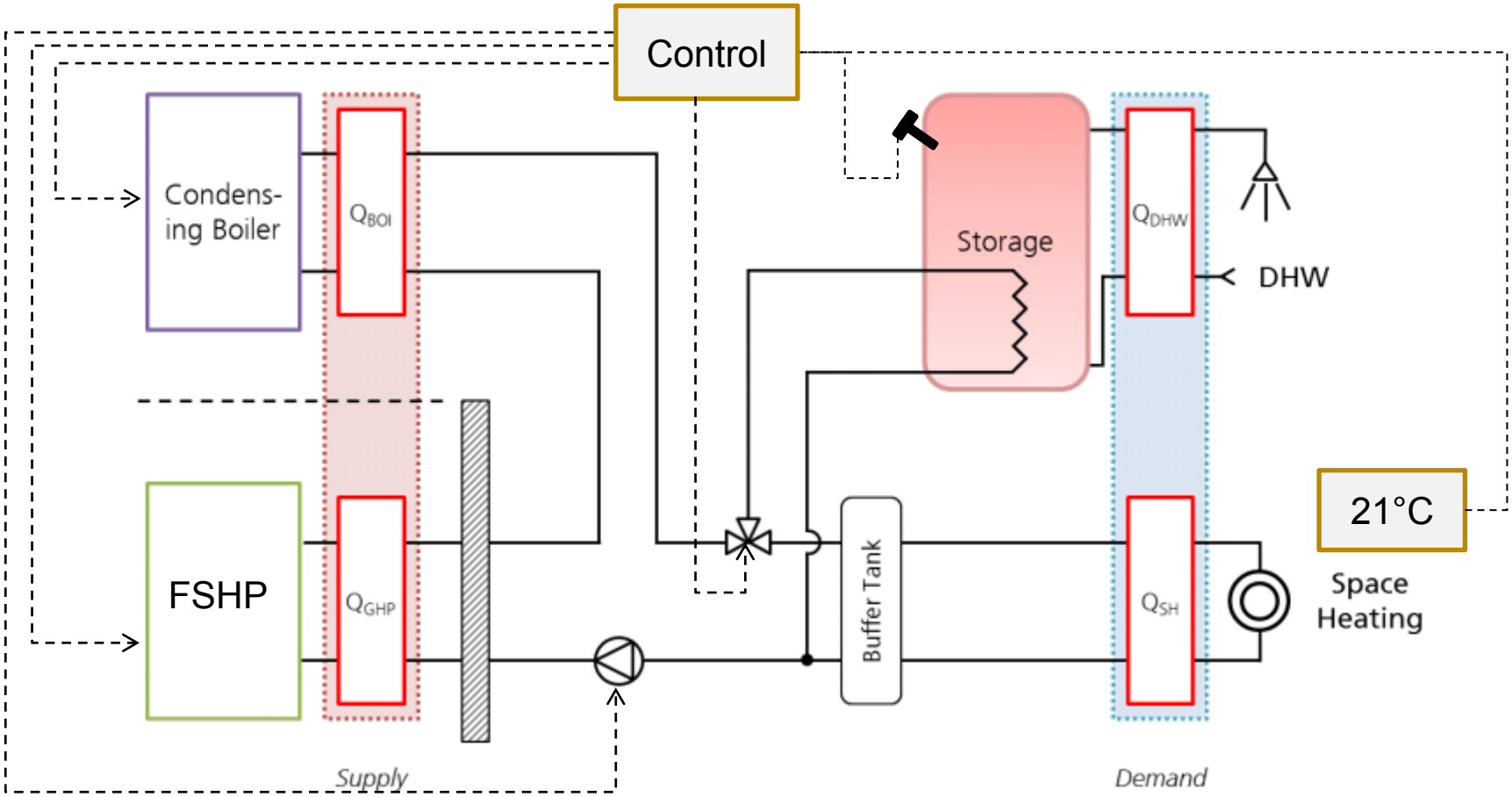

Benchmark for Residential Applications
Plant Schemes and Operation Strategies

- Condensing Boiler (reference system)

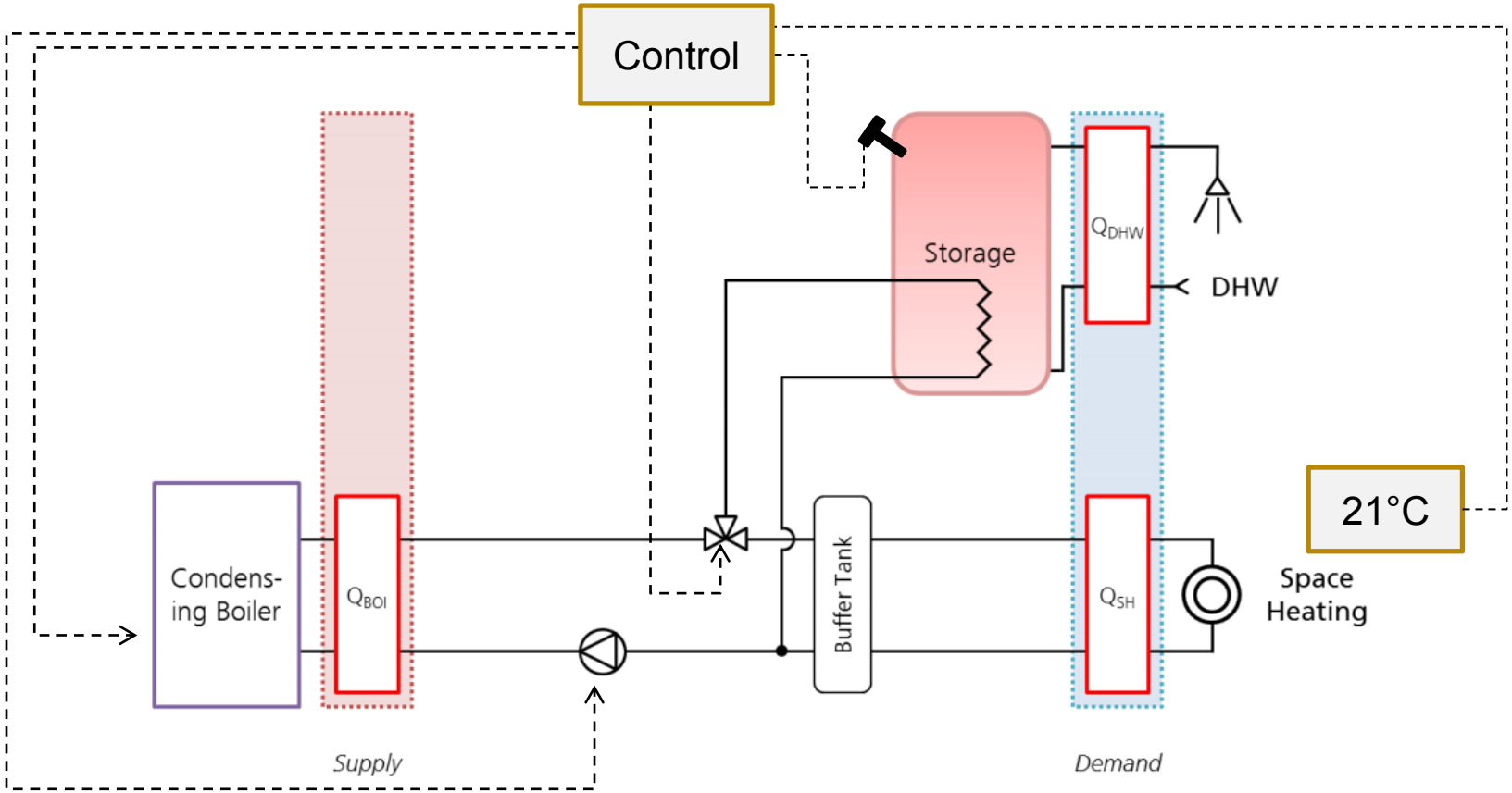

Benchmark for Residential Applications
Plant Schemes and Operation Strategies

EUROPEAN HEAT PUMP SUMMIT

- Air-source Electrical Heat Pump + Electrical Heater (optional)

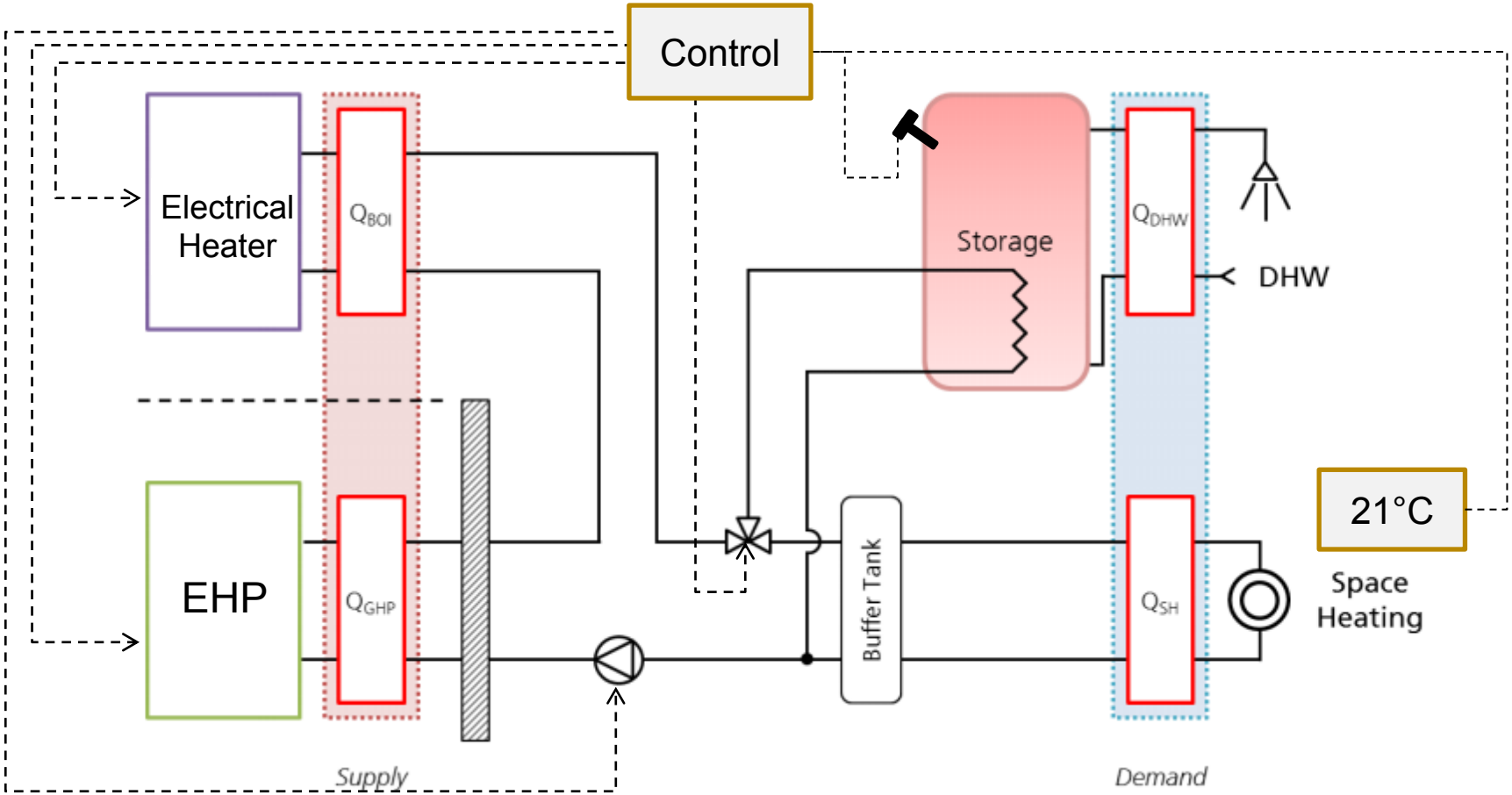

Benchmark for Residential Applications
Plant Schemes and Operation Strategies

- Condensing Boiler + Solar Thermal Domestic Hot Water Heater

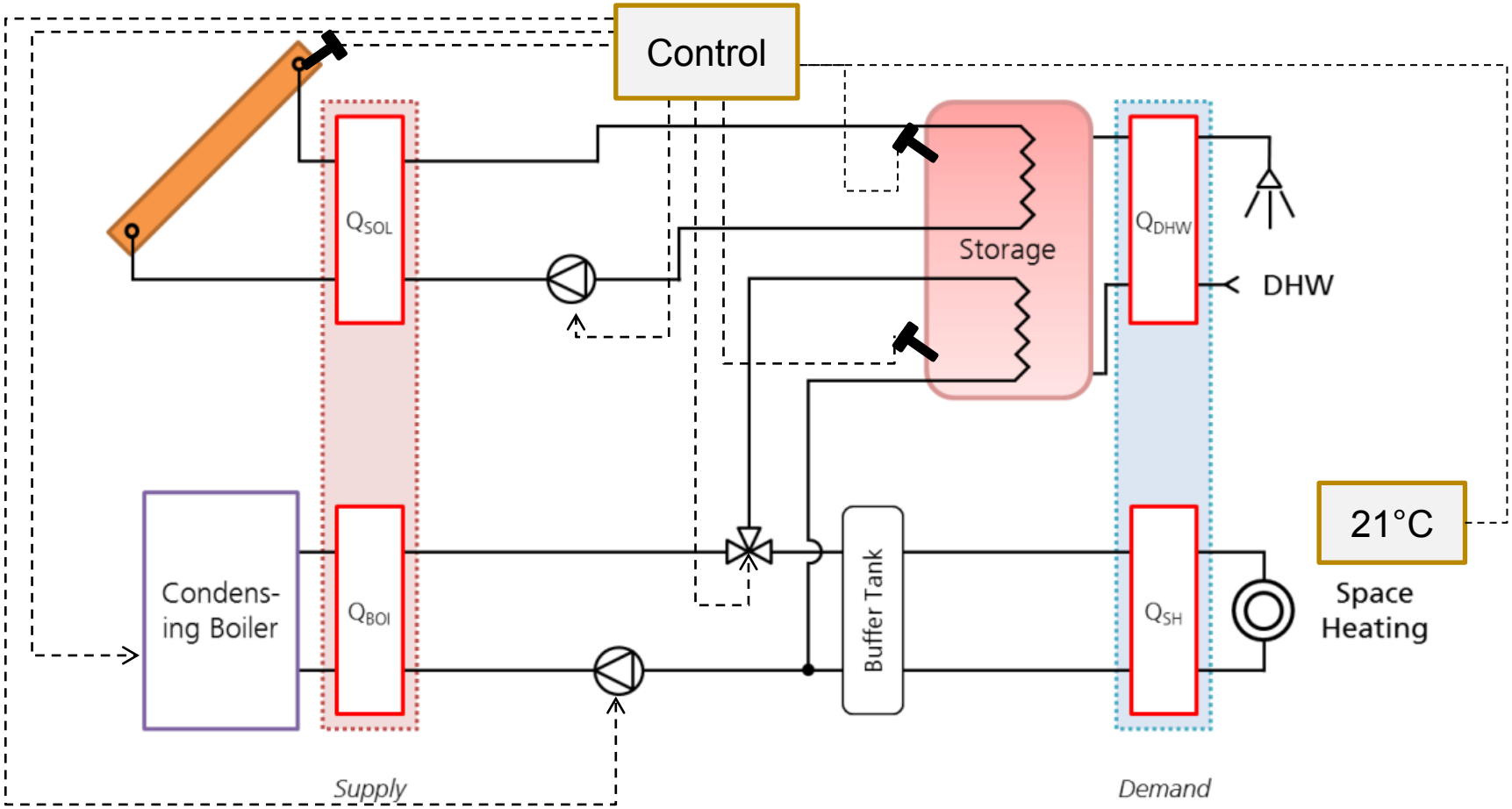

Benchmark for Residential Applications
Key Performance Indicators

EUROPEAN HEAT PUMP SUMMIT

- Primary Energy (PE)

$$PE = f_{p_{El}} W_{El} + f_{p_{NG}} Q_{NG}$$

- CO_2 Emissions (TEWI)

Conversion factors

	Natural Gas (NCV)	Electrical Grid
f_p (-)	1.15	2.0
$CO_2 (g_{CO_2}/kWh)$	202	307

Assumption:
20% reduction w.r.t.
Ecolabel data

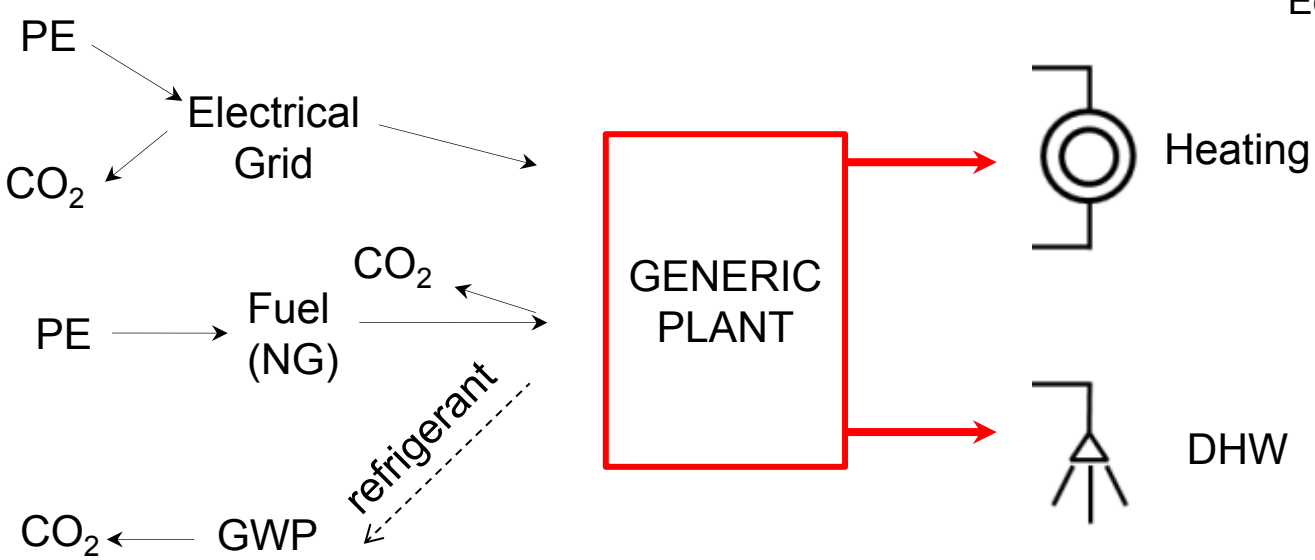

Analysis of Simulation Results

EUROPEAN HEAT PUMP SUMMIT

- Impact of Plant Dimensioning

Example
Climate: Average
Building: New

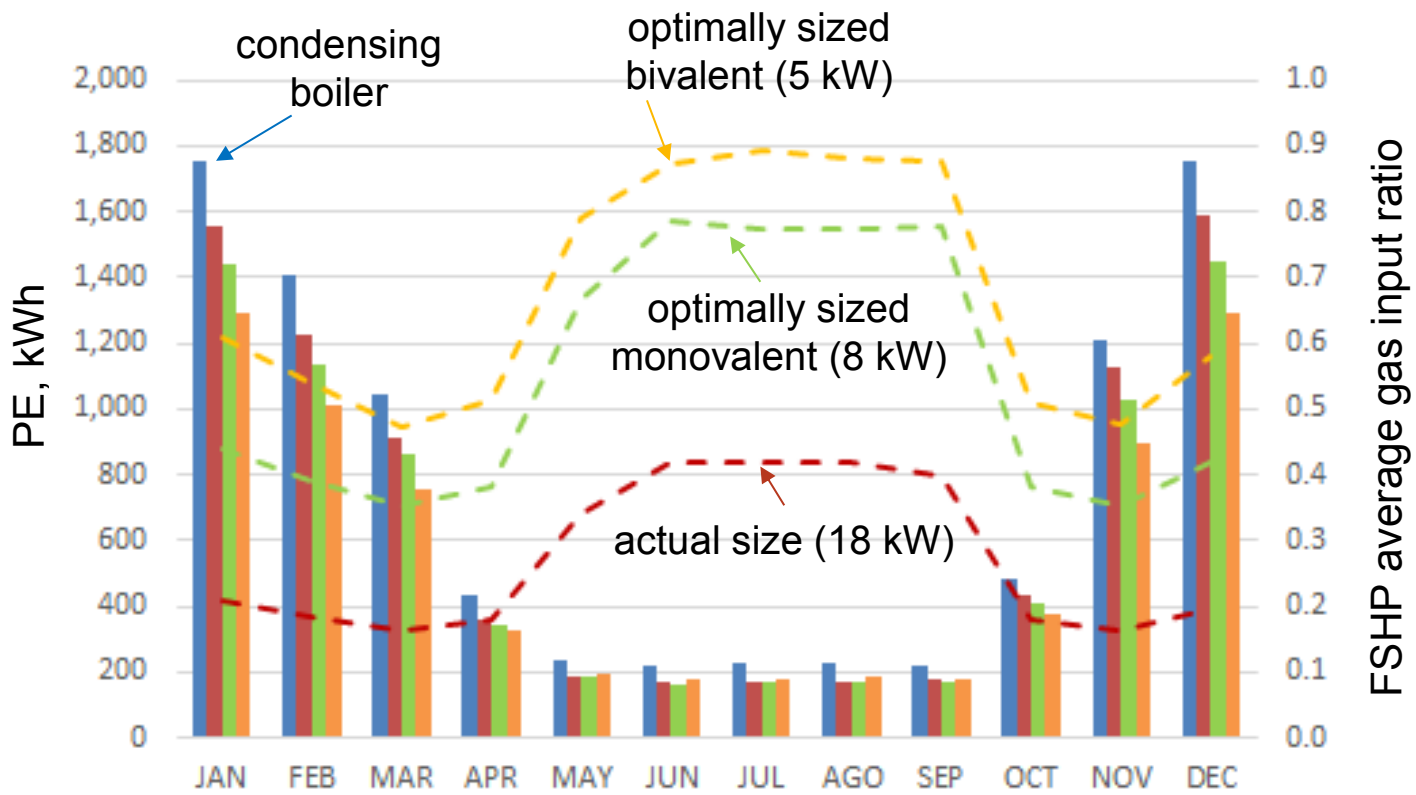

Analysis of Simulation Results

EUROPEAN HEAT PUMP SUMMIT

- Impact of Building Class

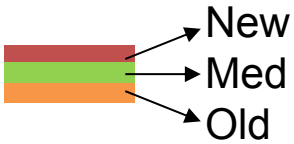

Example
System: FSHP-B (Bivalent)
Climate: Average

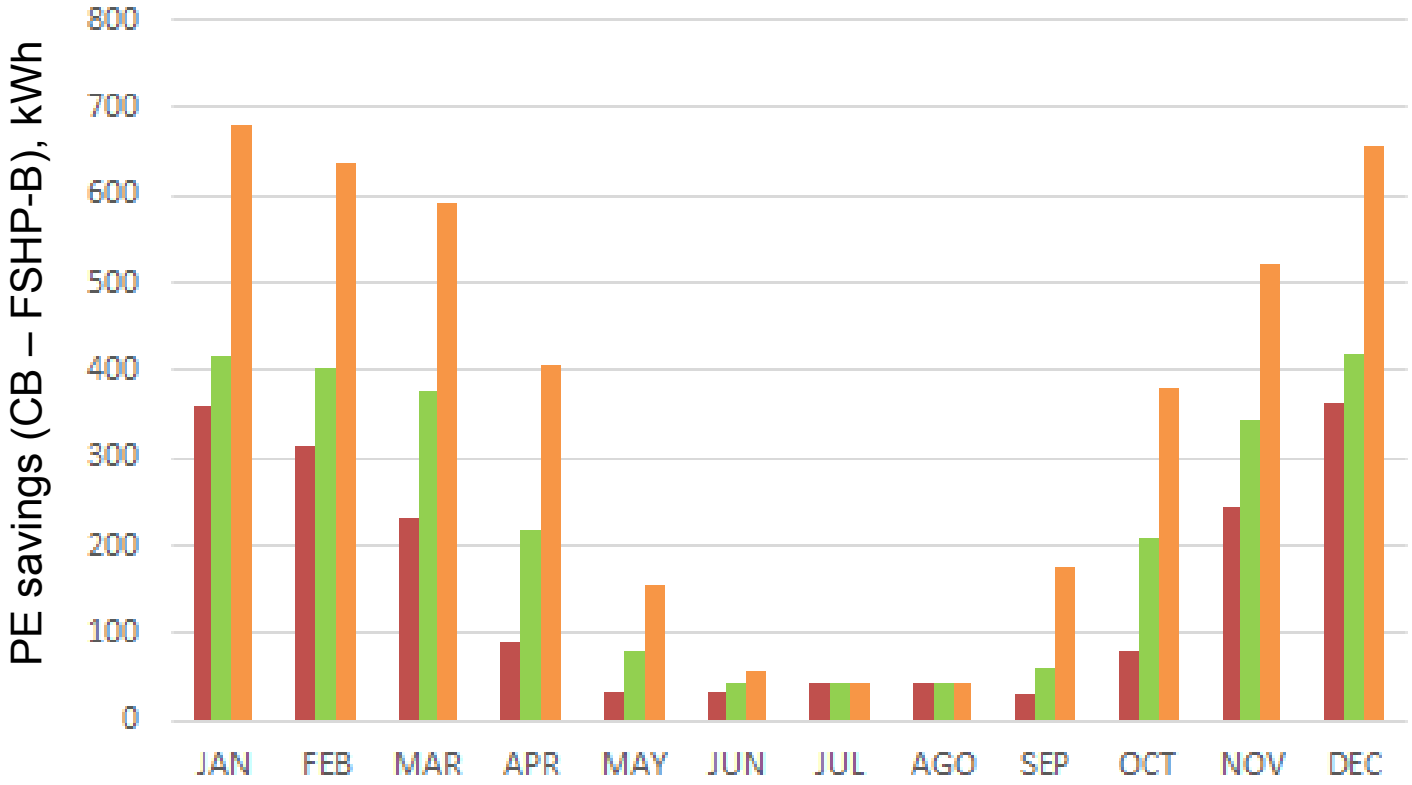

Analysis of Simulation Results

EUROPEAN HEAT PUMP SUMMIT

- Impact of Climate

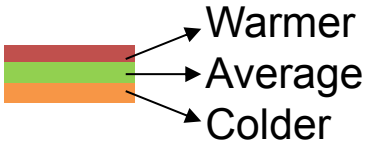

Example
System: FSHP-B (Bivalent)
Building: Medium

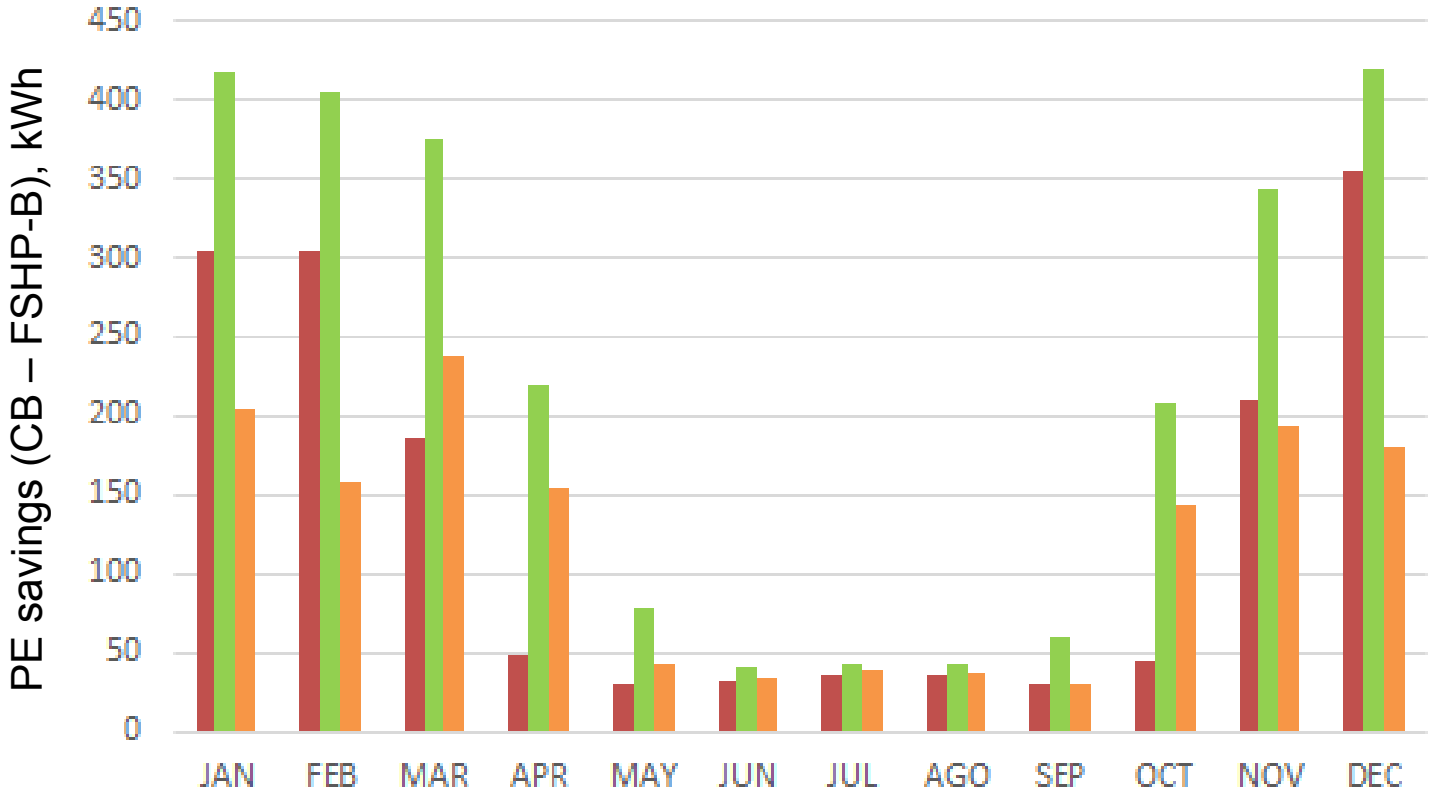

Analysis of Simulation Results

EUROPEAN HEAT PUMP SUMMIT

- Primary Energy

Example
Climate: Average

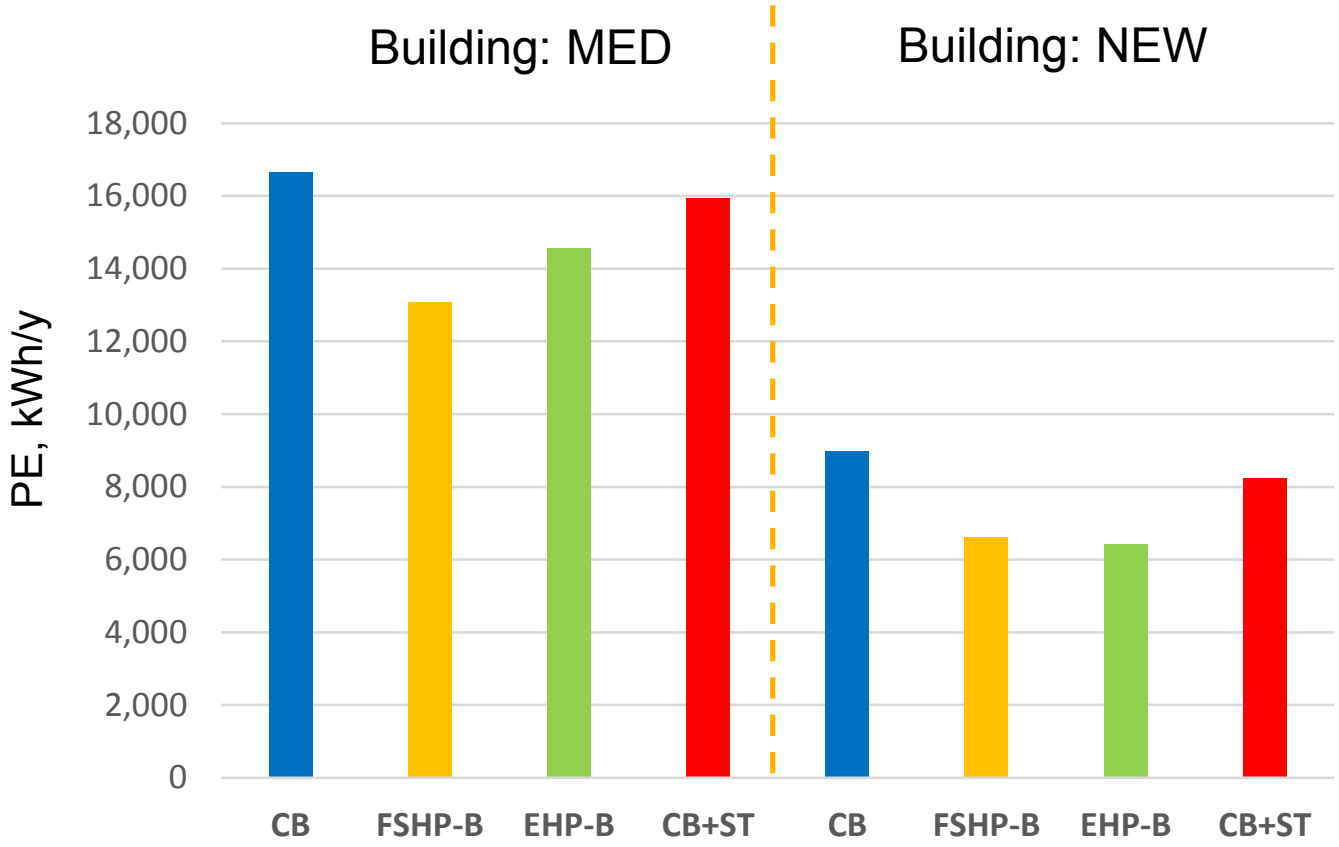

Analysis of Simulation Results

EUROPEAN HEAT PUMP SUMMIT

- CO_2 Emissions

Example
Climate: Average

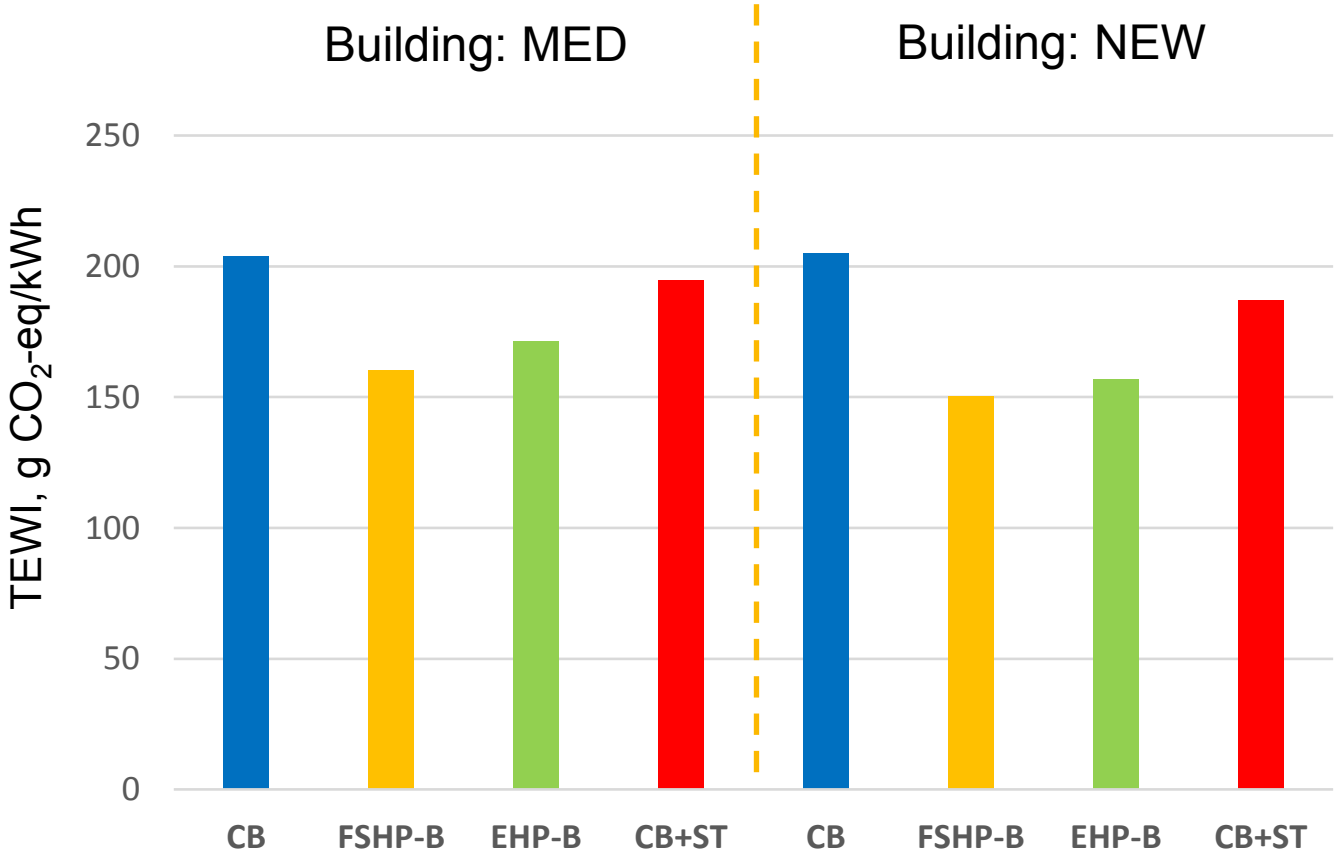

Conclusions & Next Steps

EUROPEAN HEAT PUMP SUMMIT

IN CONCLUSION:

- FSHP can achieve good PE and CO2 savings w.r.t. the Condensing Boiler
- FSHP environmentally sound also w.r.t.:
  - Condensing Boiler + Solar Thermal (better when SH loads are not too low)
  - EHP + Auxiliary Electrical Heater (better when high thermal lifts are needed)

  } Retrofitting applications

BUT:

- Plant dimensioning is important! If FSHP is oversized, the energy saving potential is not fully exploited (degradation at partial loads)
- In NEW homes, bivalent FSHP+CB systems perform better than monovalent ones, although this might change if future technology developments will provide better efficiency at partial loads

NEXT STEPS:

- Extend the range of analysis to different Climates / Building Classes
- Evaluate Financial Indicators
- Account for Country-Specific Boundary Conditions

Acknowledgements

- HEAT4U project
- IEA SHC Task 44
- IEA HPP Annex 43

Many thanks for your attention

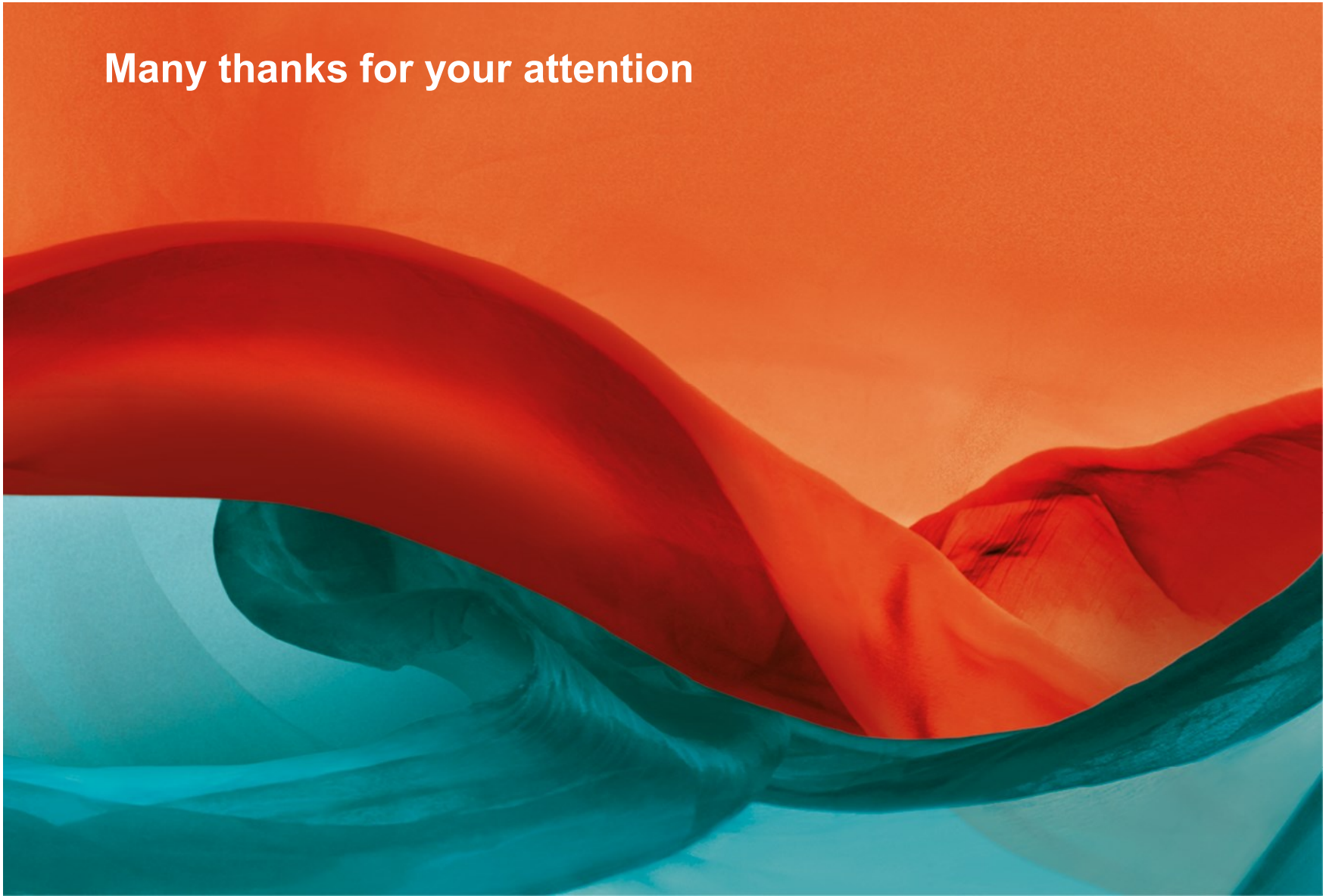

EUROPEAN HEAT PUMP SUMMIT

POWERED BY CHILLVENTA

SYMPOSIUM + EXPO
NUREMBERG, 20–21.10.2015

Industrial | Commercial | Residential
Heating & Cooling | Components & Equipment

hp-summit.de

NÜRNBERG MESSE