# EUROPEAN HEAT PUMP SUMMIT

POWERED BY CHILLVENTA

SYMPOSIUM + EXPO
NUREMBERG, 20–21.10.2015

Industrial | Commercial | Residential
Heating & Cooling | Components & Equipment

hp-summit.de

NÜRNBERG MESSE

# Performance testing of a lab-scale high temperature heat pump with HFO-1336mzz-Z as the working fluid

**THOMAS FLECKL, Michael Hartl, Franz Helminger**
Austrian Institute of Technology (AIT)

**Konstantinos (Kostas) Kontomaris, Ph.D.**
Chemours Fluoroproducts

**Julian Pfaffl**
BITZER Kühlmaschinenbau GmbH

# Topics

- Project information
- Lab heat pump
- Experimental setup
- Results
- Summary
- Outlook

# Project information

## Motivation

Industrial heating consumes a significant fraction of the energy consumed globally. Heating at temperatures higher than about 100°C is predominantly provided through combustion of fossil fuels with uncertain prices and well recognized environmental impacts. A significant fraction of industrial input energy is lost as low temperature waste heat that could be lifted by high temperature heat pumps to process relevant temperatures.

## Aim

Validation of a novel high temperature refrigerant, **HFO-1336mzz-Z (also known as DR-2)**, in process heat pumps with high condensation temperatures.

## Sponsor

KLIEN: Neue Energien 2020

## Program Execution

Austrian Institute of Technology (AIT)

# Project partners

HFO-1336mzz-Z

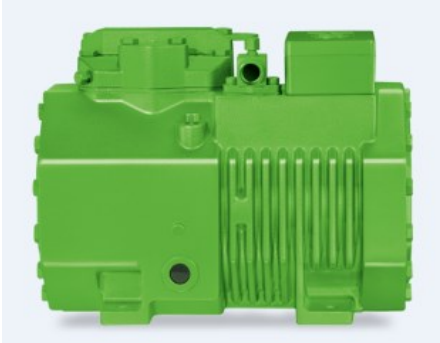

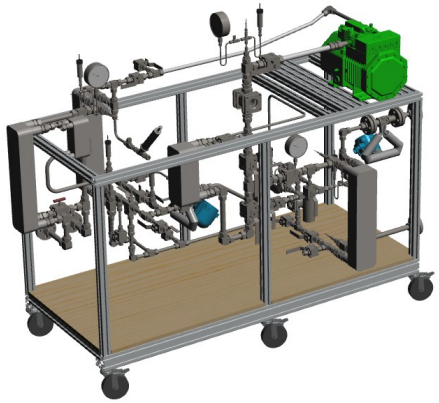

# Lab Heat Pump

| | HFO-1336mzz-Z |
|---|---|
| Nominal Boiling Point (°C) | 33,4 |
| Critical temperature (°C) | 171,3 |
| Critical pressure (MPa) | 2,9 |
| ODP | None |
| $GWP_{100}$ | 9,4 |

Non-flammable at 60 and 100°C according to ASTM E681-2001

# Lab Heat Pump

- Mobile and modular experimental setup
- Minimally adapted BITZER semi-hermetic reciprocating compressor with external frequency inverter (ABB)
- Commercially available SWEP plate heat exchangers

**Nominal Heating Capacity: 12 kW**

at $T_{cond}$=100°C & $T_{evap}$=65°C

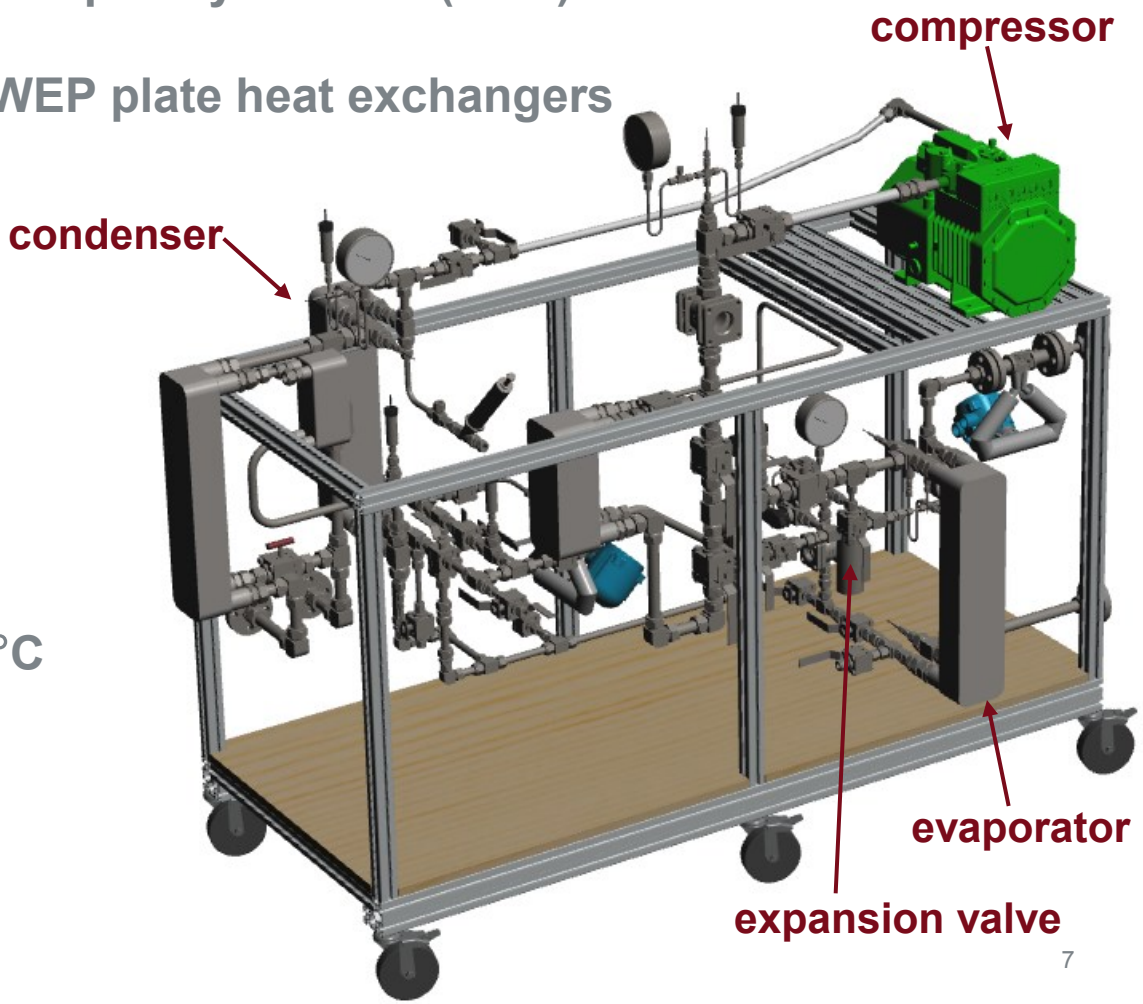

# Lab Heat Pump

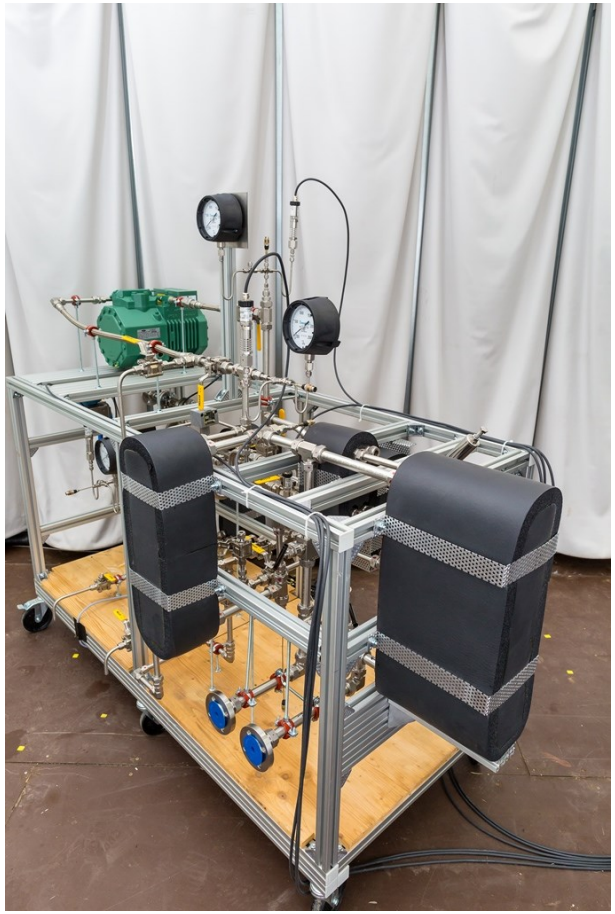

# Lab Heat Pump

## Sensors in Refrigerant, Heat Source and Heat Sink Circuits

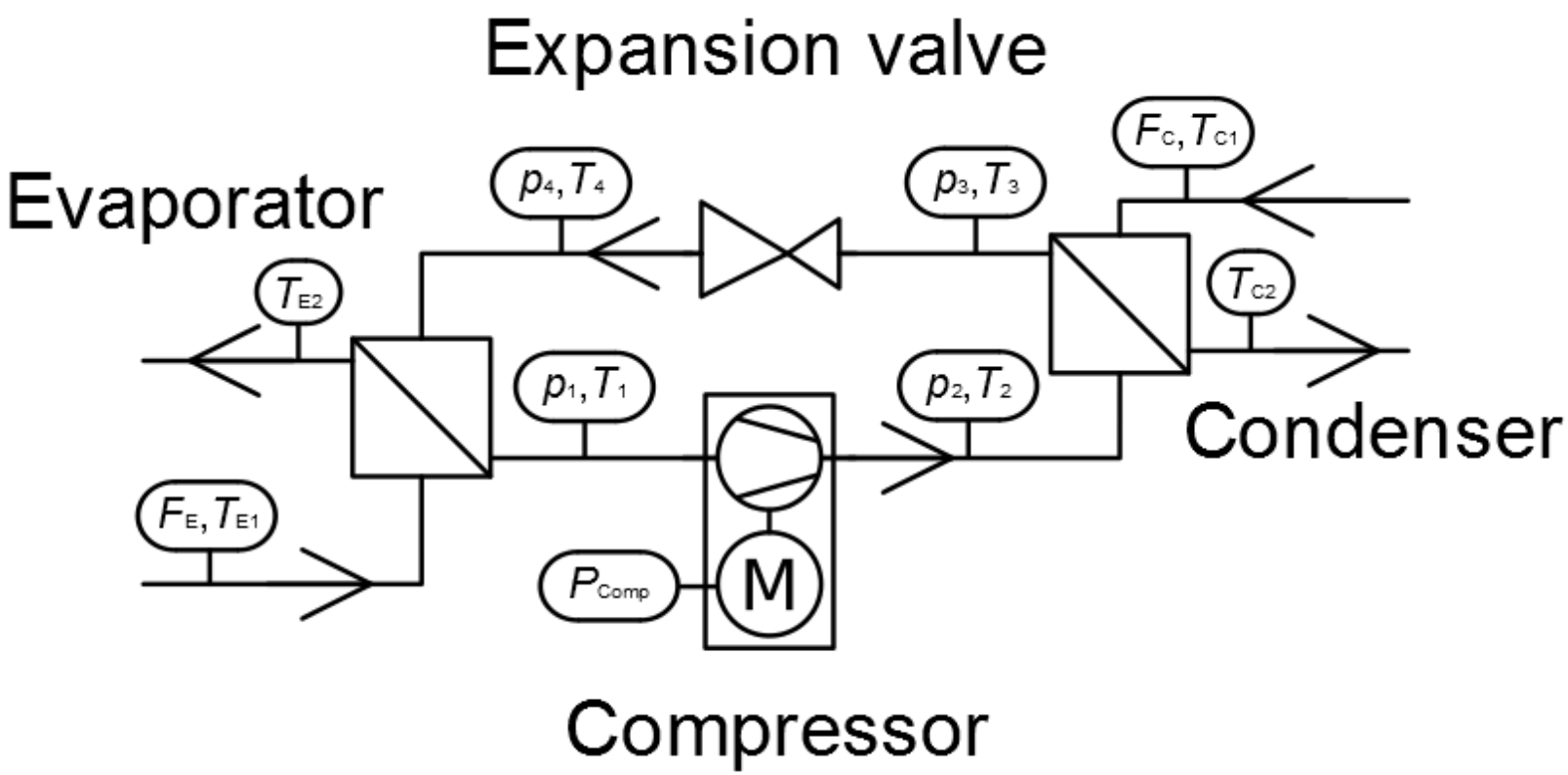

# Experimental setup

## Lab heat pump + water circuit

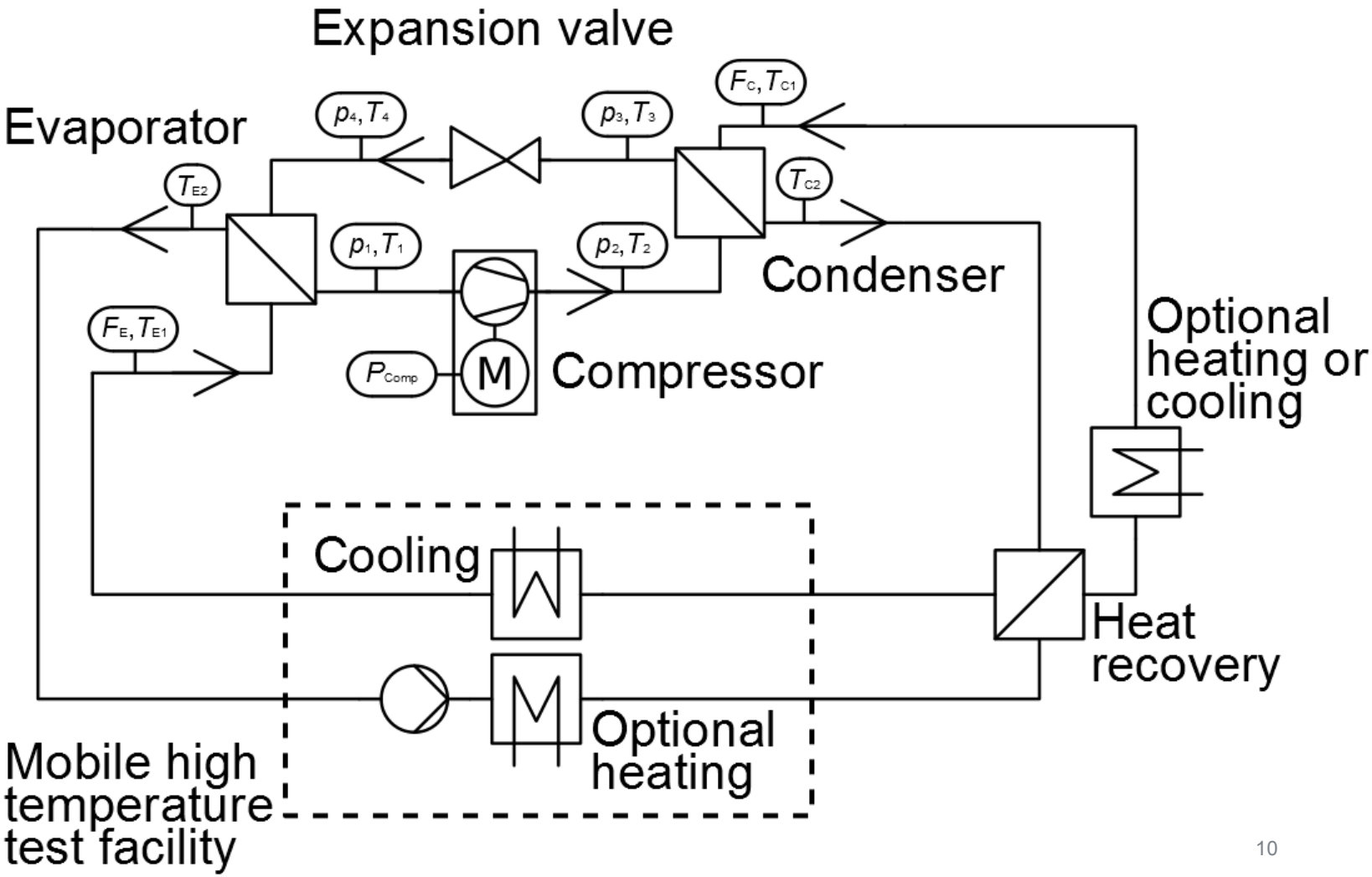

# Experimental setup

## Mobile high temperature test facility

# Results: Exploratory Run Matrix

| Compressor frequency | | 50 Hz |
|---|---|---|
| | Superheating | Subcooling |
| $T_{lift}$ = 35K | ~ 10 K | ~ 7 K |
| $T_{lift}$ = 70K | ~ 19 K | ~ 8 K |

$$T_{cond} = T_{cond}(p_2)$$

$$T_{evap} = T_{evap}(p_1)$$

$$T_{lift} = T_{cond} - T_{evap}$$

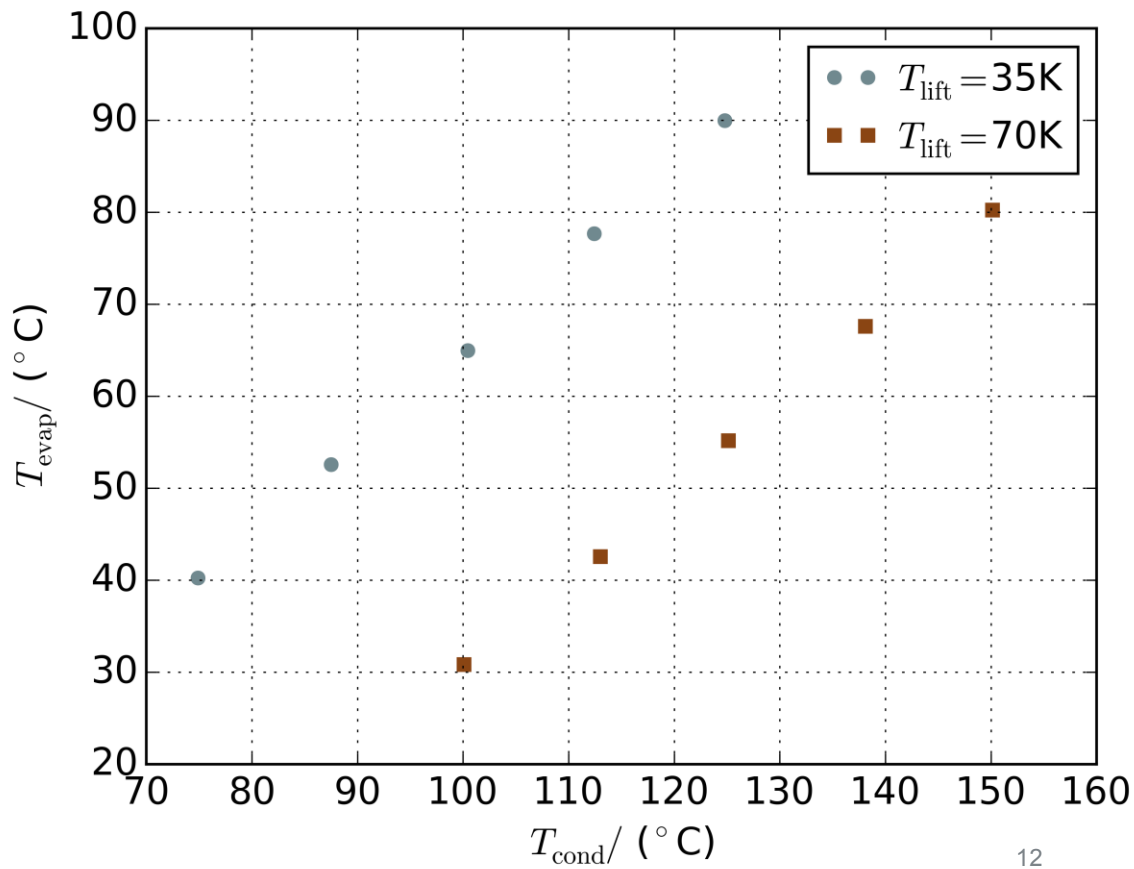

# Results: Energy Balances

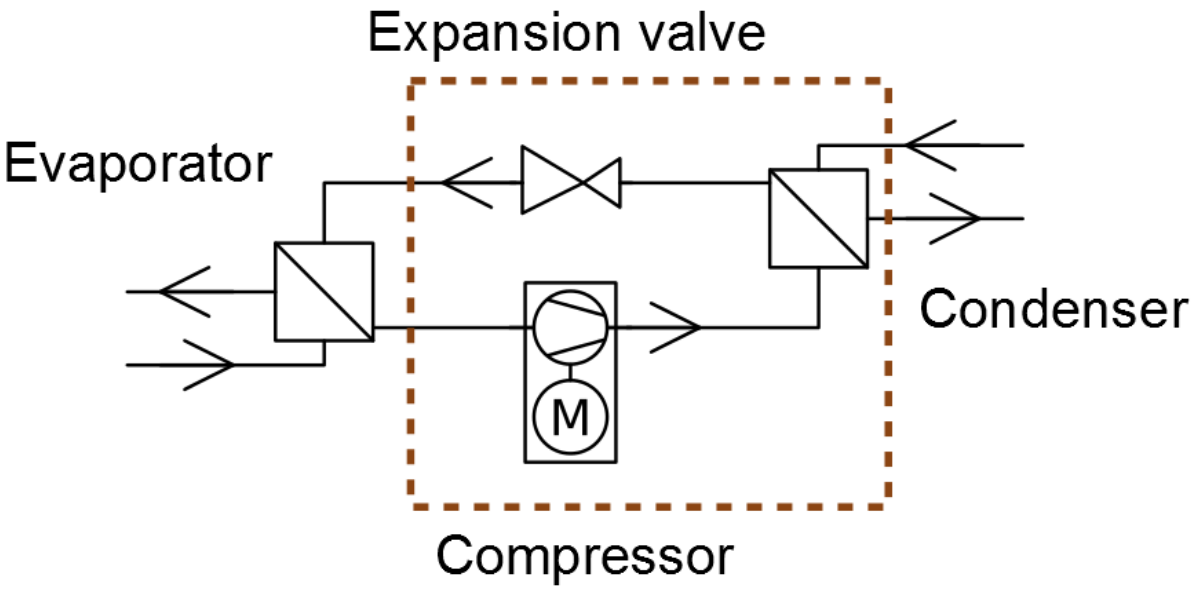


$$COP_h = \frac{\dot{m}_C \cdot c_{p,H2O} \cdot (T_{C2} - T_{C1})}{P_{Comp}}$$

$$COP_{h,Carnot} = \frac{T_{cond}}{T_{cond} - T_{evap}}$$

$$f_0 = \frac{COP_h}{COP_{h,Carnot}}$$

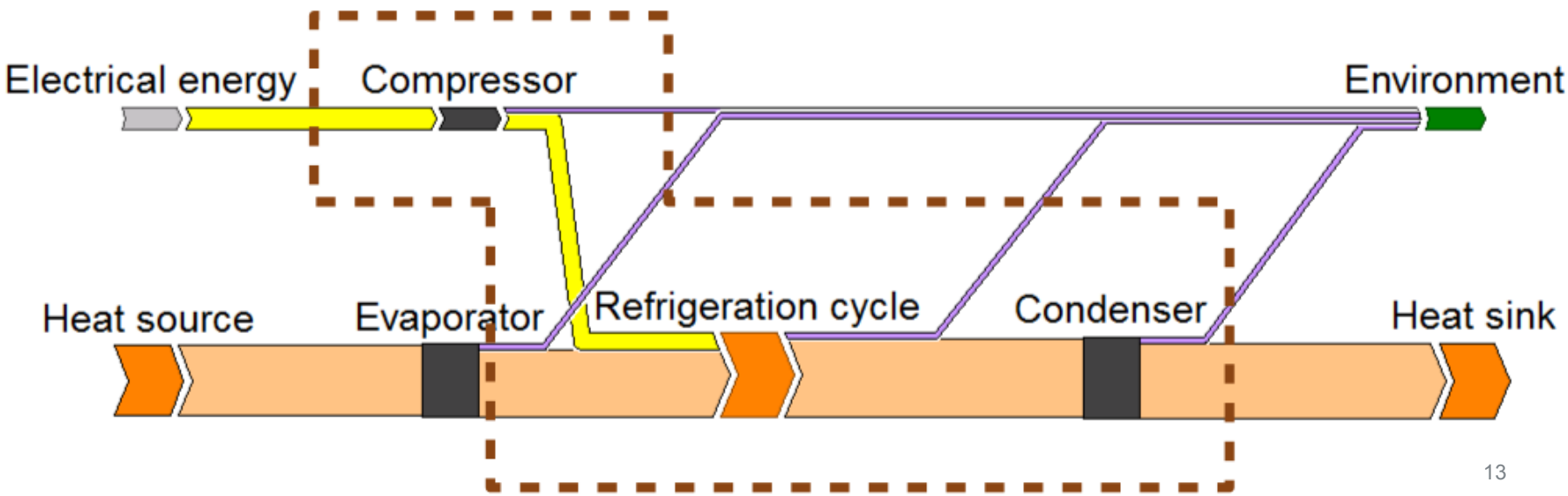

# Results: $COP_h$

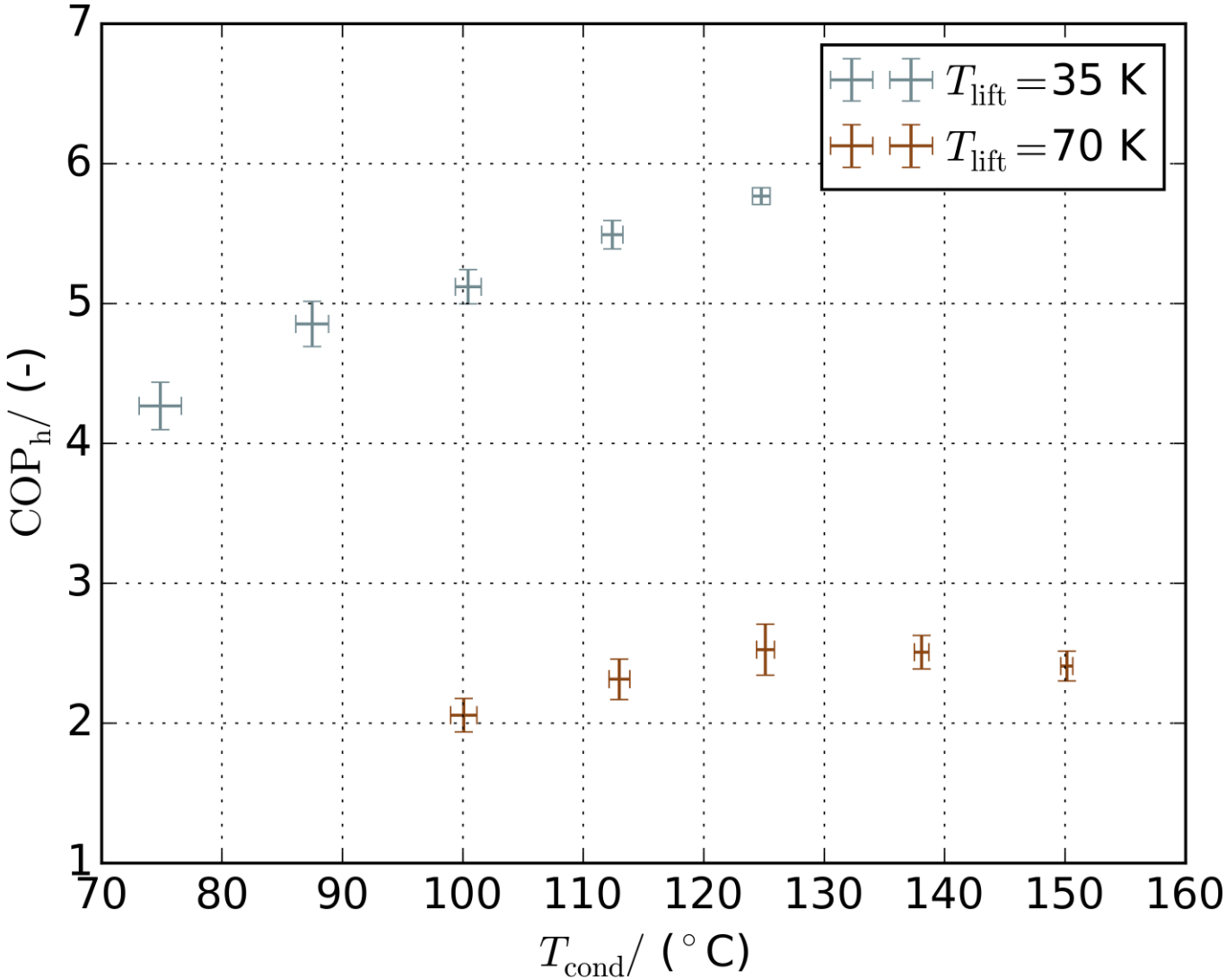

# Results: $f_0$

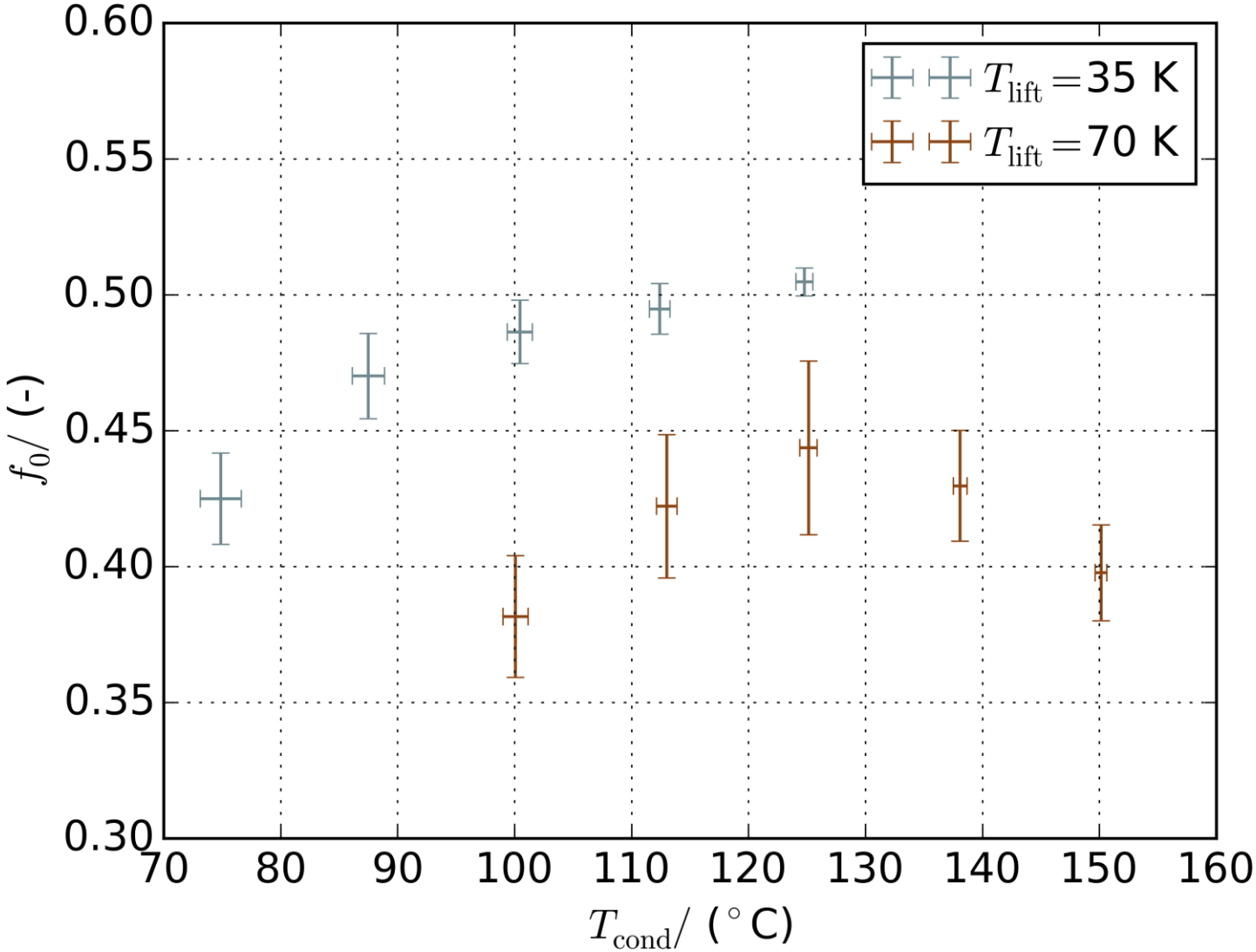
0.60
0.55
0.50
0.45
0.40
0.35
0.30
70
80
90
100
110
120
130
140
150
160
$f_0$/ (-)
$T_{\mathrm{cond}}$/ (°C)
$T_{\mathrm{lift}}$ = 35 K
$T_{\mathrm{lift}}$ = 70 K

# Results: Suction gas and discharge temperature

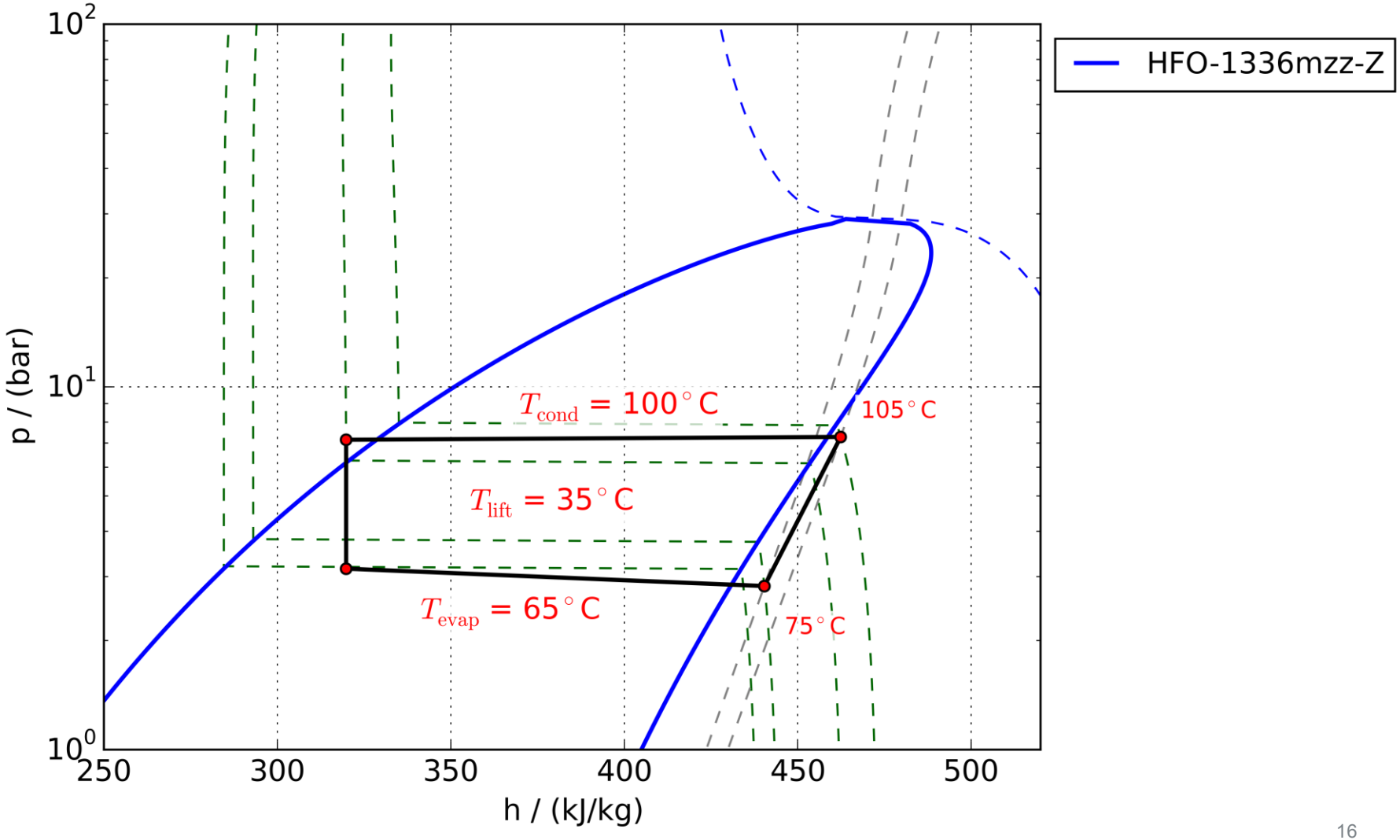

# Results: Suction gas and discharge temperature

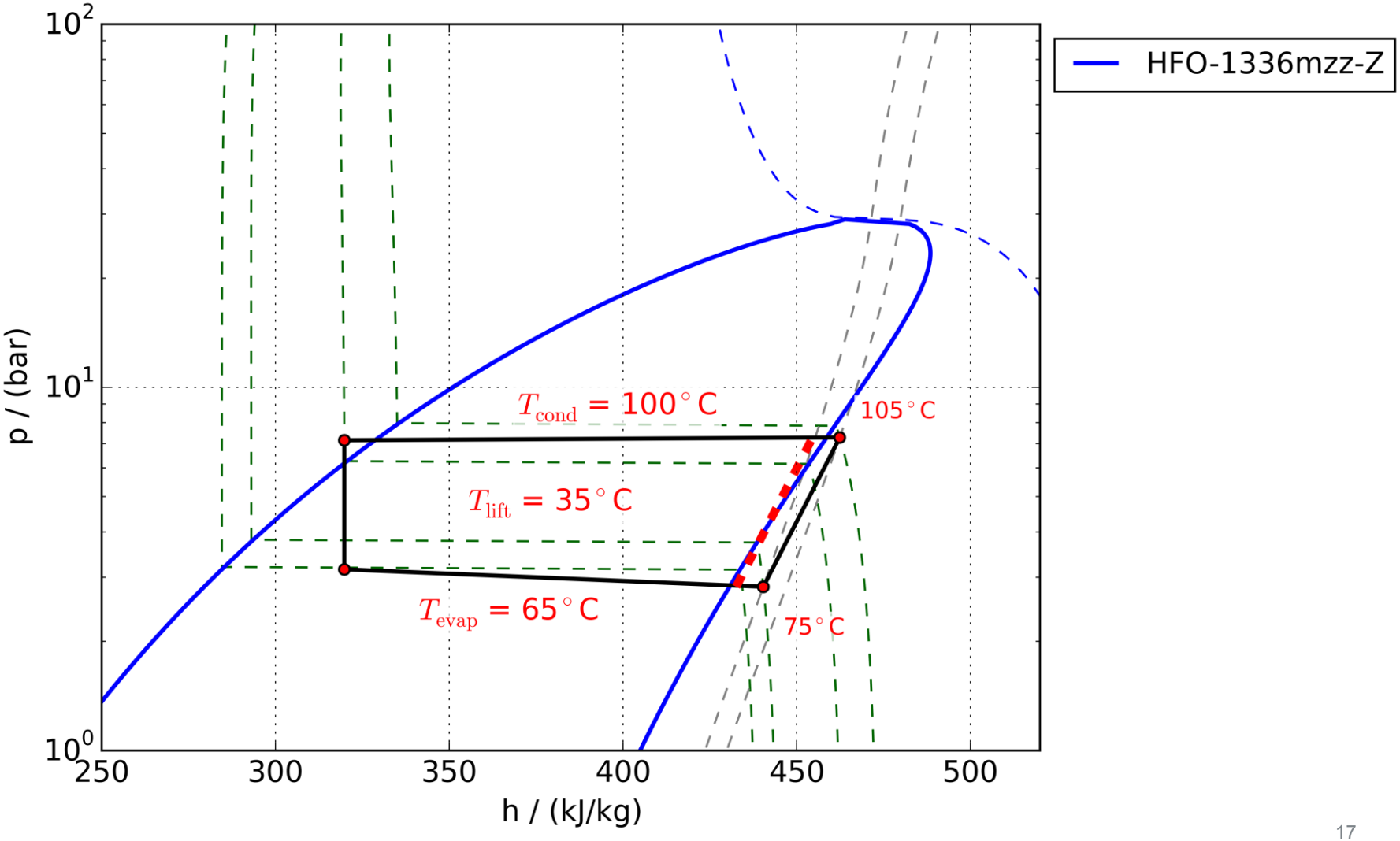

# Results: Suction gas and discharge temperature

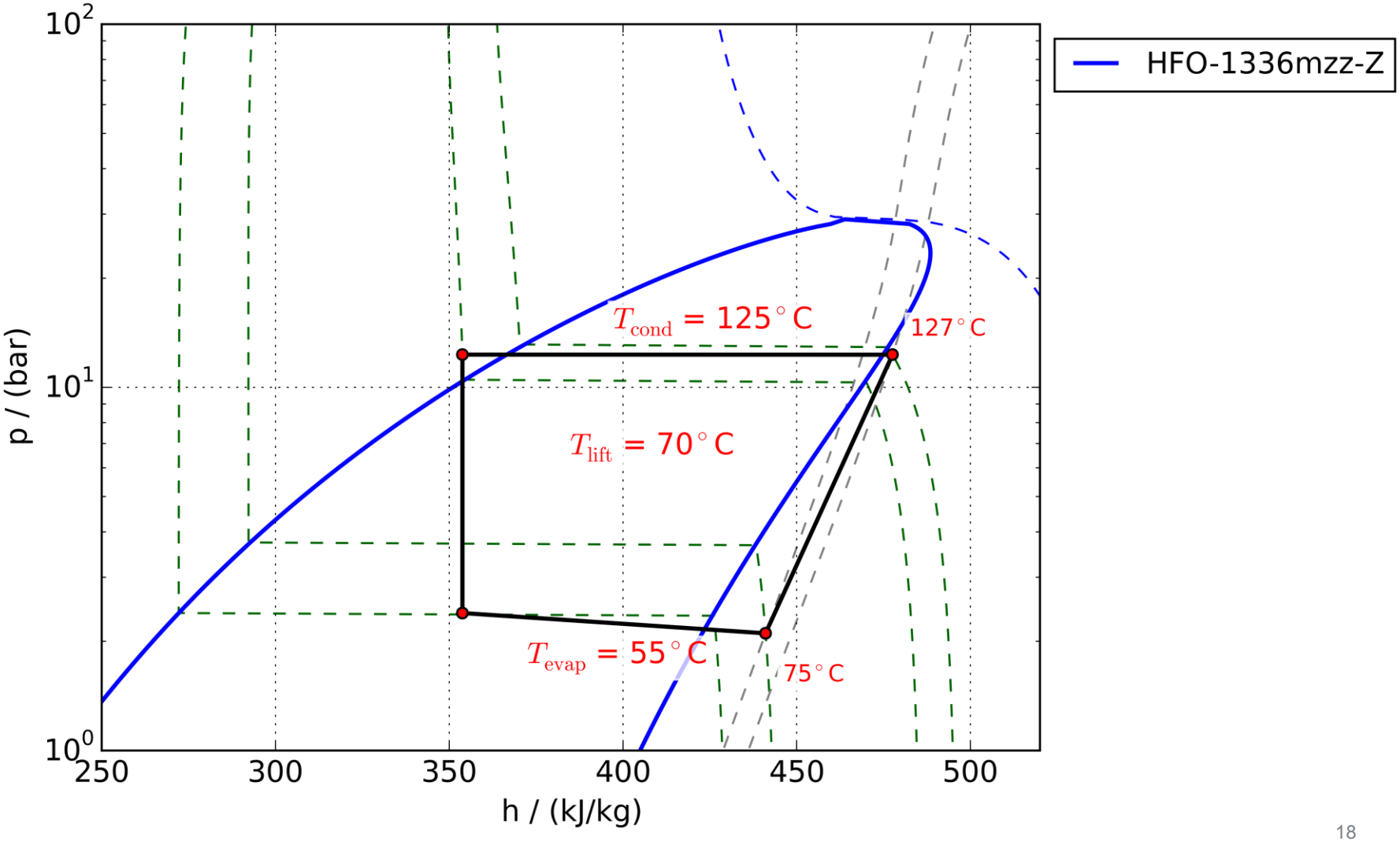

# Results: Suction gas and discharge temperature

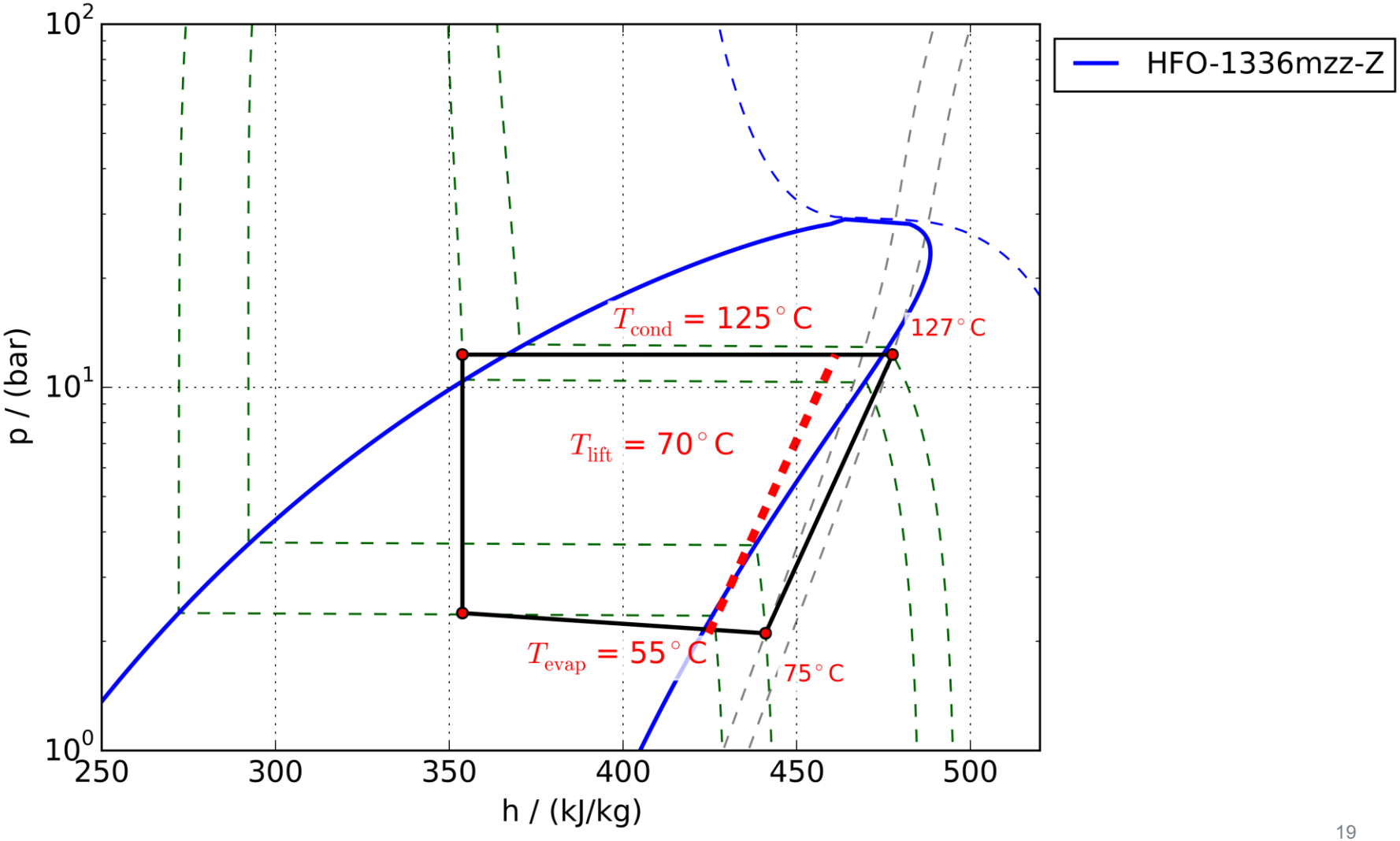

# Results: Suction gas temperature

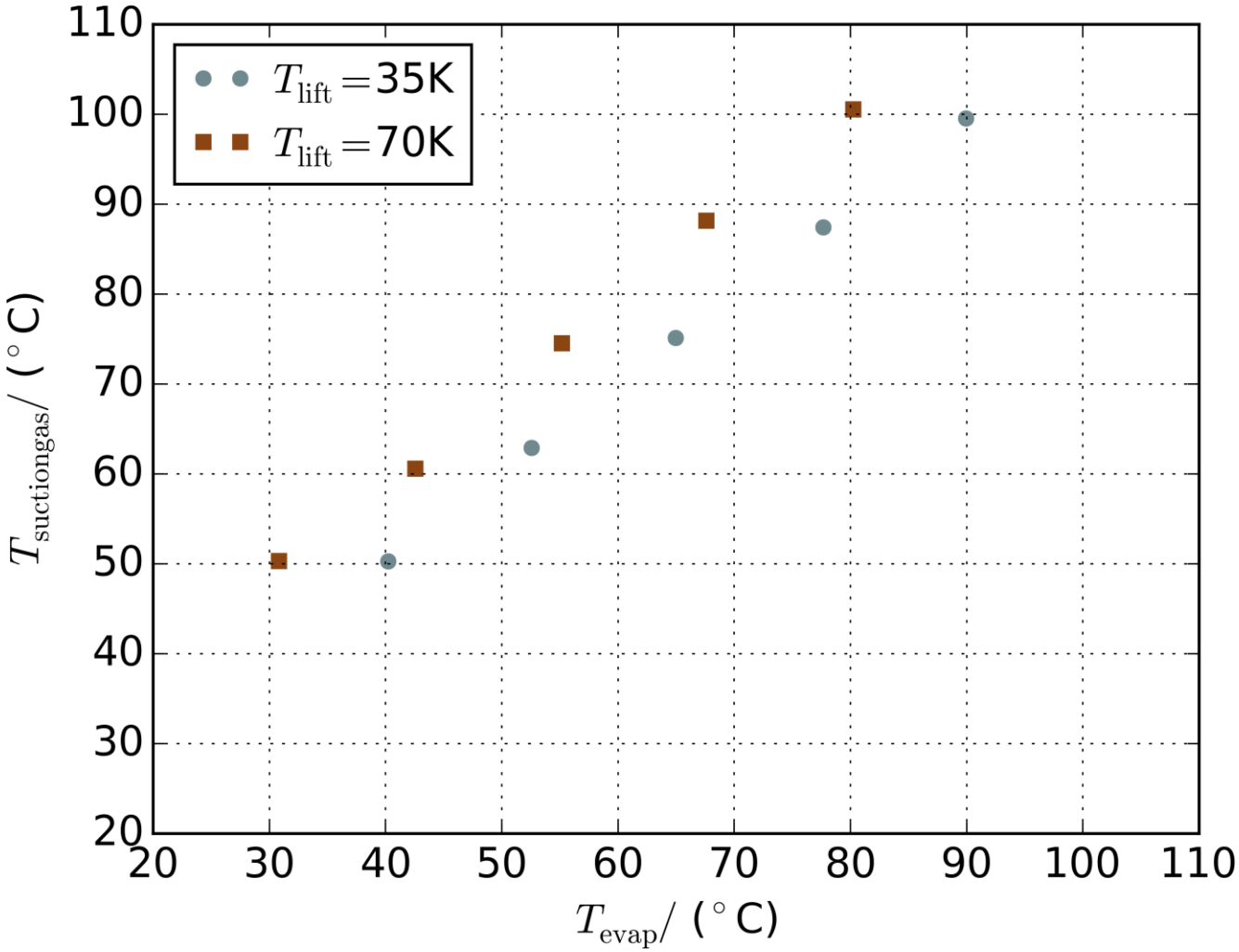

# Results: Discharge Temperature

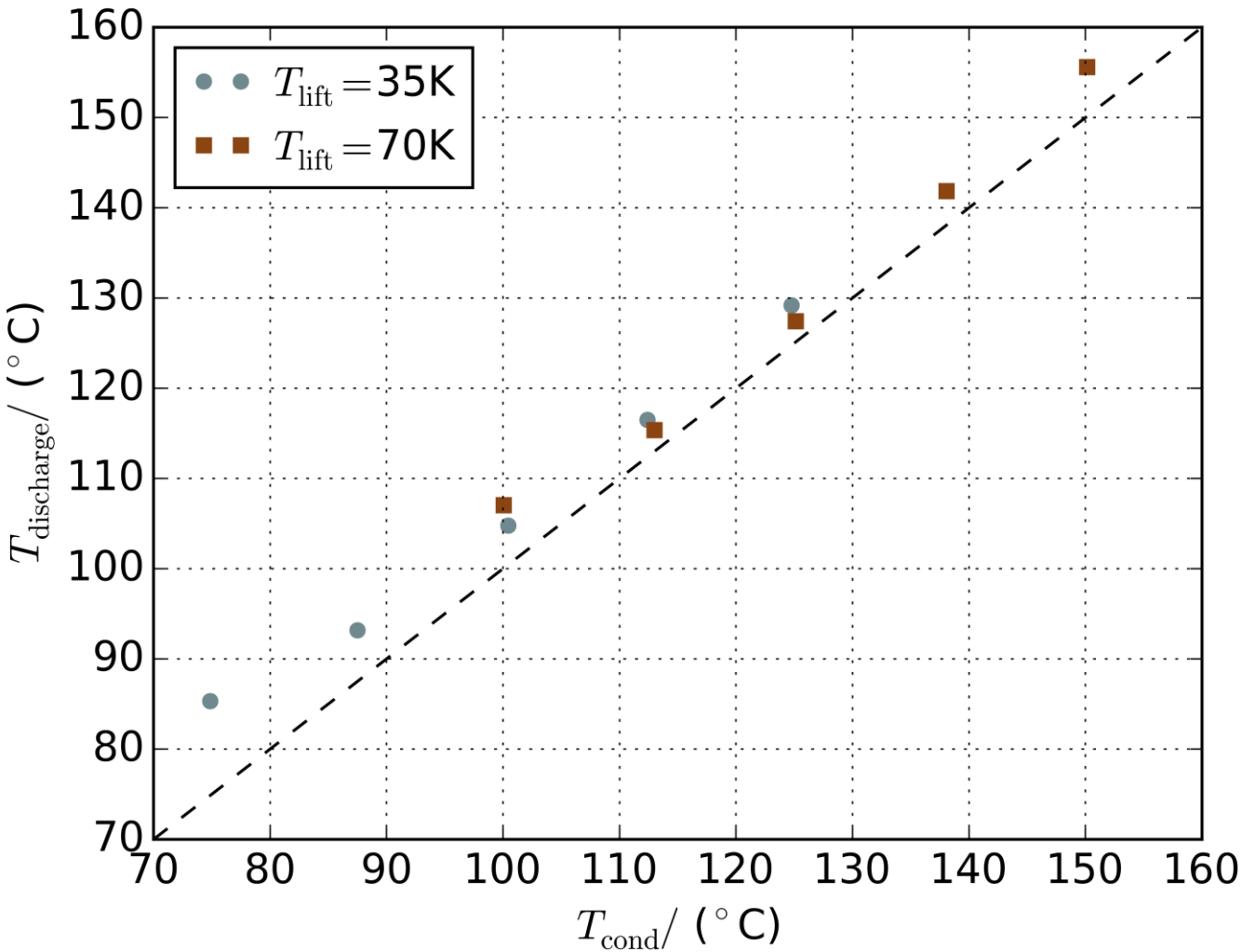

# Summary

- Small scale (12 kW) heat pump with largely existing equipment components operating with **HFO-1336mzz-Z** was tested
- Condensing temperatures up to about **150°C** and evaporating temperatures up to **90°C** demonstrated!
- Performance figures under lab scale conditions

| | $COP_h$ | $f_0$ |
|---|---|---|
| $T_{lift}$ = 35K | up to 5,8 | up to 0,5 |
| $T_{lift}$ = 70K | up to 2,5 | up to 0,45 |

- Superheating of suction gas required
- Discharge temperature slightly above condensing temperature

# Outlook

- Tests with internal heat exchanger for suction gas superheating

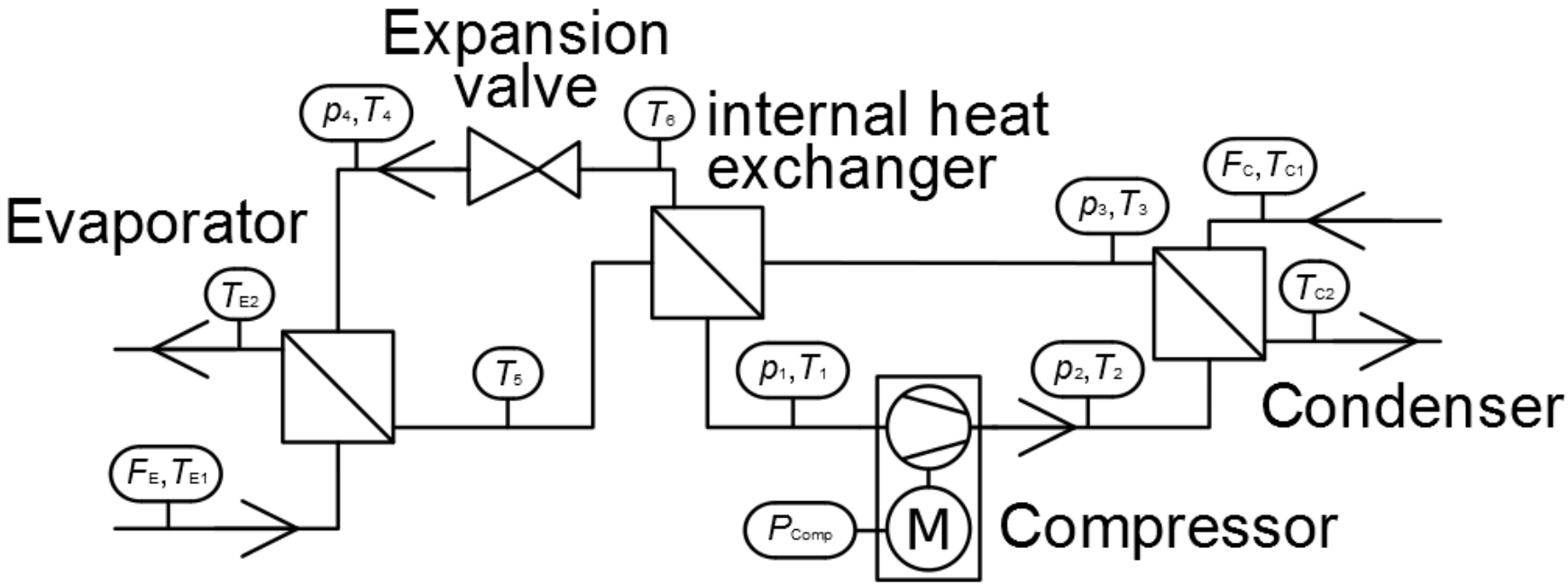


- Further developments needed before market readiness:
  - Optimization evaporator, compressor and compressor oil
  - Demonstrate at larger scale with screw or centrifugal compressor

AUSTRIAN INSTITUTE OF TECHNOLOGY

*THANK YOU!!*

**Questions:**

**Thomas Fleckl**
thomas.fleckl@ait.ac.at

# EUROPEAN HEAT PUMP SUMMIT

POWERED BY CHILLVENTA

SYMPOSIUM + EXPO
NUREMBERG, 20–21.10.2015

Industrial | Commercial | Residential
Heating & Cooling | Components & Equipment

hp-summit.de

NÜRNBERG MESSE