EUROPEAN HEAT PUMP SUMMIT

POWERED BY CHILLVENTA

SYMPOSIUM + EXPO
NUREMBERG, 20–21.10.2015

Industrial | Commercial | Residential
Heating & Cooling | Components & Equipment

hp-summit.de

NÜRNBERG MESSE

Experimental results of the behavior of a hybrid ammonia/water high temperature heat pump

Dipl.Ing Taylan Tokan

Prof. Dr.-Ing. Stephan Kabelac

Leibniz University Hannover

- Member TU9
- 25.700 students
- 2.980 employees

- Material Data
- Energy Converter
- Heat & Mass transfer
- Thermodynamics of Complex Systems

Who am I ???

Name, Surname: Taylan Tokan

Date of Birth: 10.04.1989

Work Experience: PhD. Student / scientific Assistant –
Institut für Thermodynamic Hanover
Topic: Control and Optimization of a industrial Heat Pump

Enexi Engineering - Applied technology consulting for the cooling and heat pump industry
www.enexi-engineering.de

Motivation

Why should you use a high temperature heatpump?

- industrial potential in : 174 TWh/a
- lower primary energy consumption

Why should it be a refrigerant mixture of $NH_3 + H_2O$?

- No GWP or ODP
- High efficiency
- Low pressure ratio

Possibilities

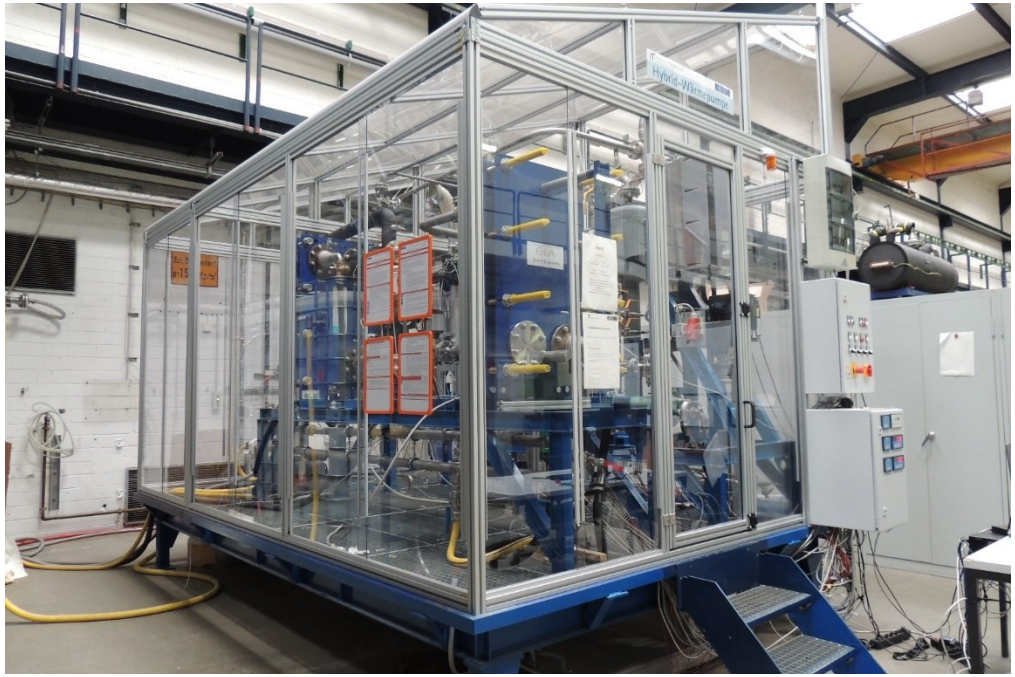

Dairy

Flushing System

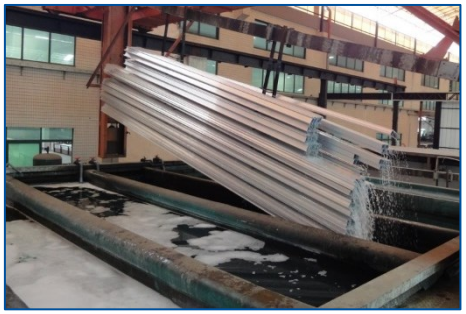

Degereasing bath

Setup

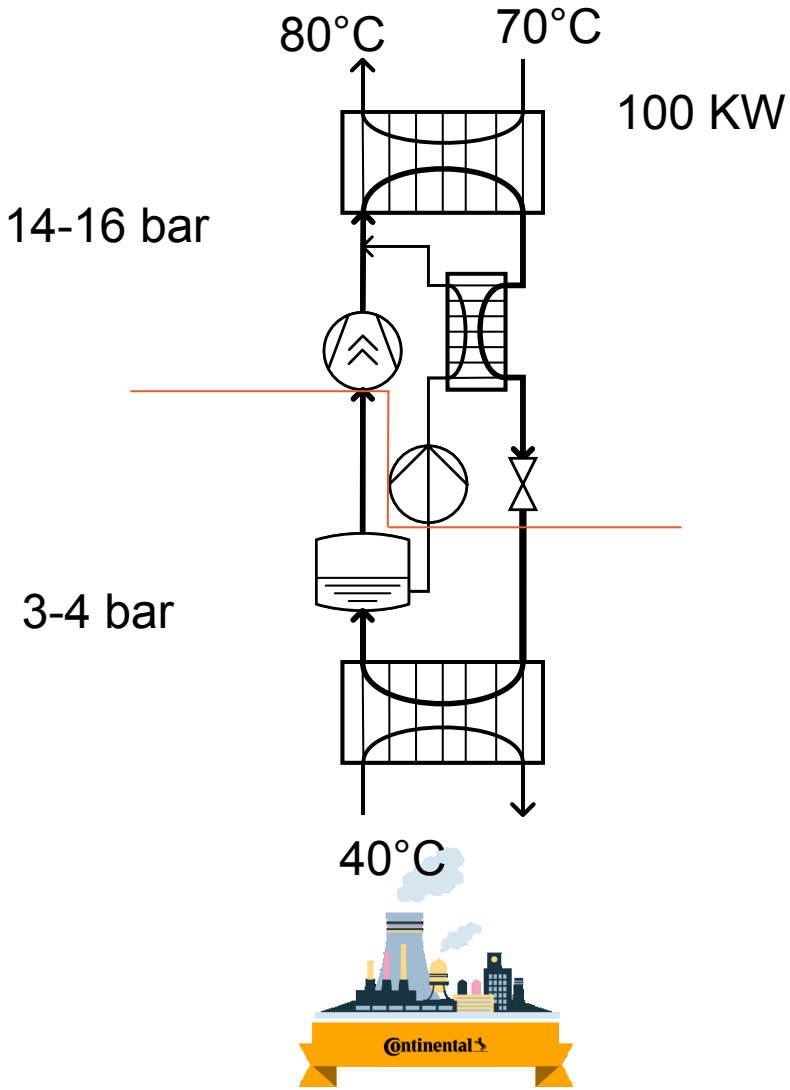

- **Characteristics:**
- NH_3/H_2O mixture
- Standard components
- Low pressure
- High efficiency

- **Tasks:**
- Oil-Water behaviour ✓
- Optimal mixing poor solution with ammonia gas ✓
- control mechanism for automatization ✗
- Complete Condensation ✓
- Cavitation liquid pump ✗

Task I: Oil System

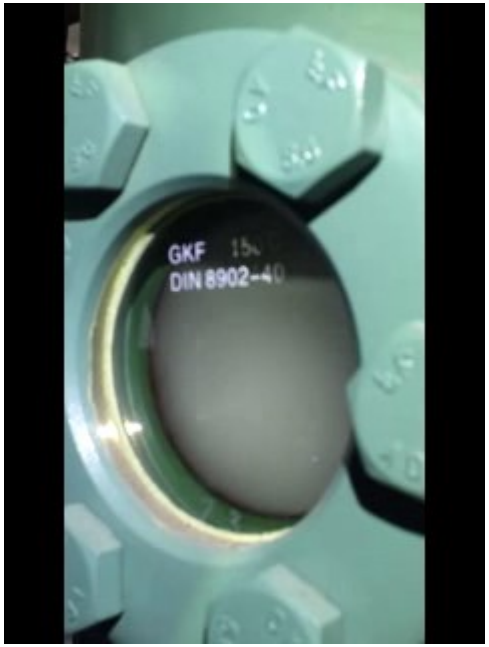

Characteristics:

- Needed for the screw compressor
- Reniso Synth 68
- POA – Basis (polyalphaolefine)

Appearance:

- Oxidation of some pipes → red color
- Small gas bubbles → cloudly
- Water → no affect to viscosity

Task II: Mixingpoint - Resorbtion

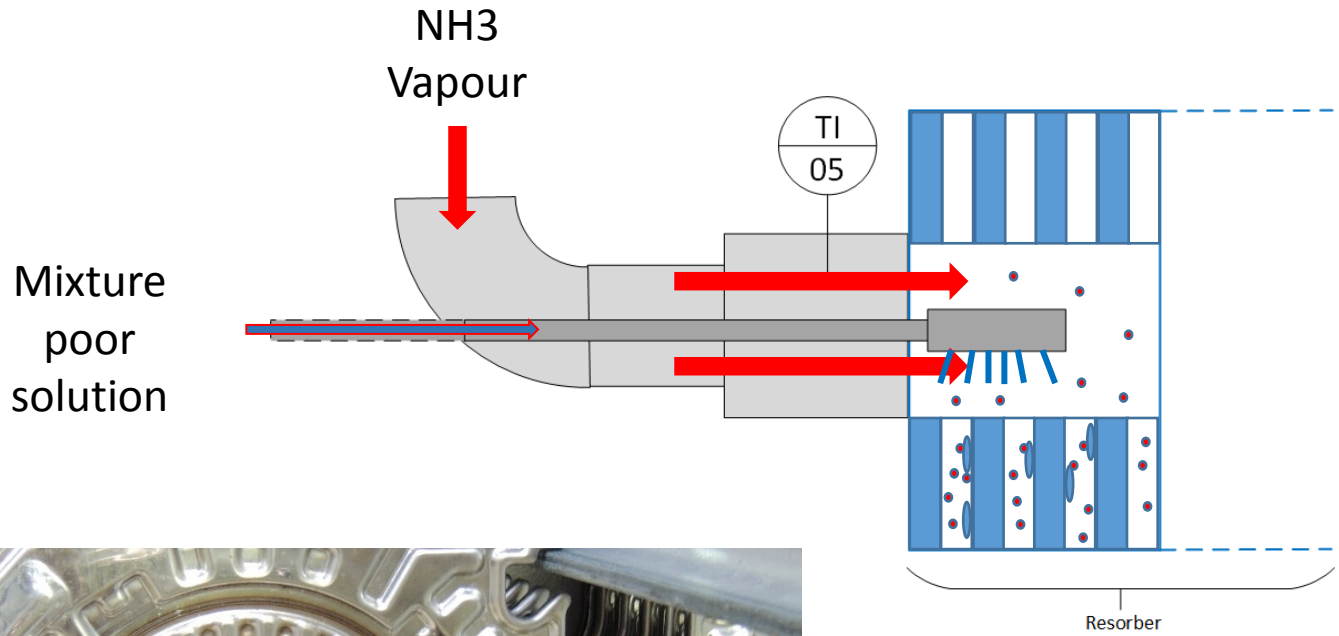

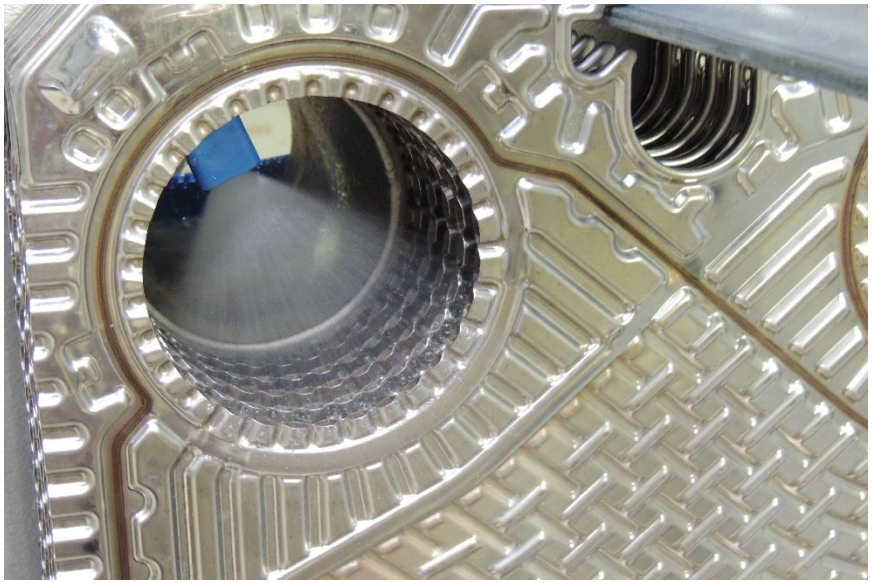

Update: changed selfmade nozzle to lechler-nozzle

→ Well distributed flow through plate heat exchanger

Task III: Main Control Concept

Theory:
- Undercooling of NH_3/H_2O Mixture

Result:
- Working & stable process

Implementation through:
- Specific ratio of massflows
- Pressure level

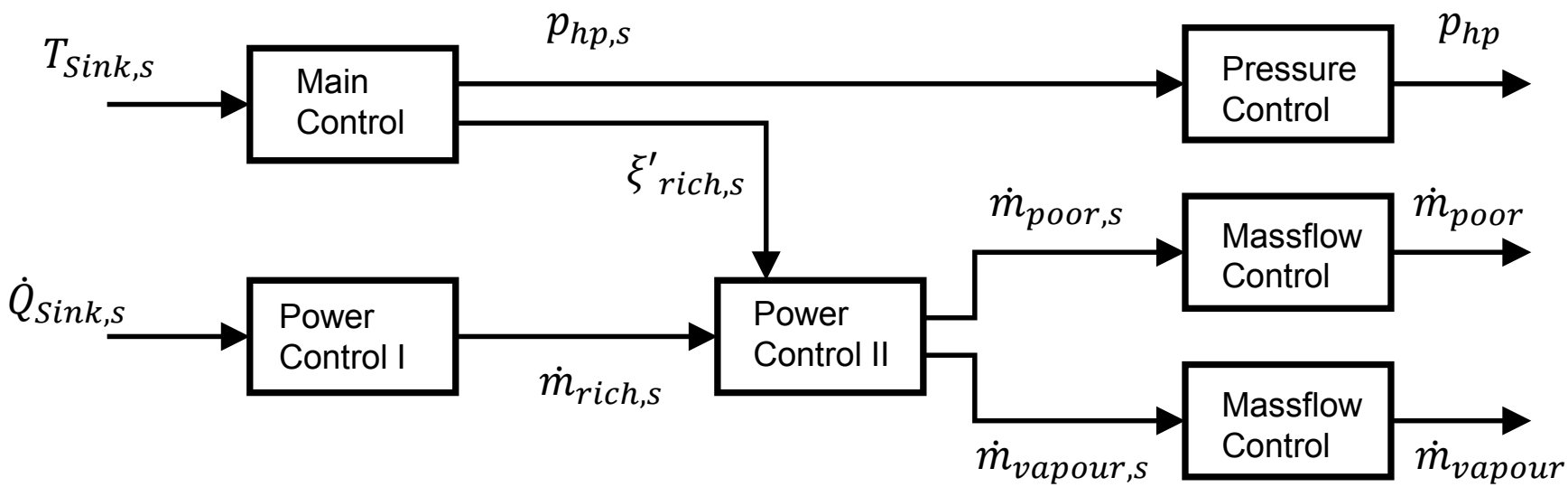

Experimental Results

Research & Conditions

EUROPEAN HEAT PUMP SUMMIT

Research:

- Heat transfer
- Highest possible efficiency
  - Different compositions
  - Variable control mechanisms

Conditions:

- Arbitrary operating point
- 45% Ammonia 55% Water in poor Solution
- Oil temperature 80 °C
- Inlet temperature Sink 40°

Temperature Liquid

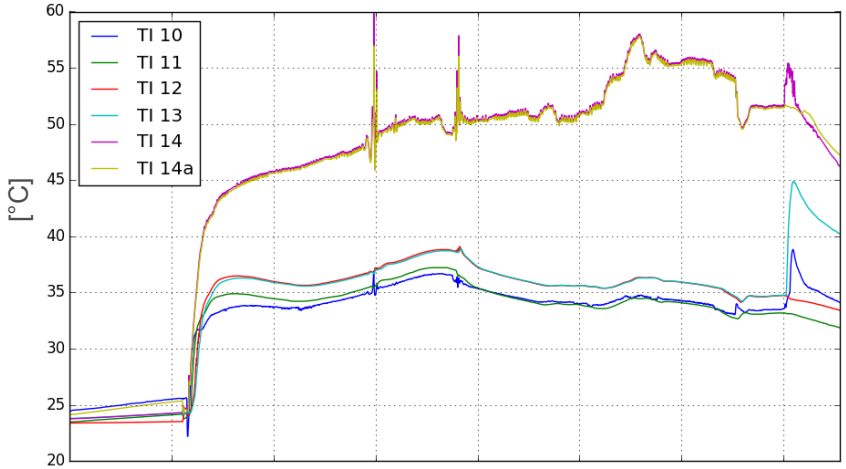

Temperature Source / Sink

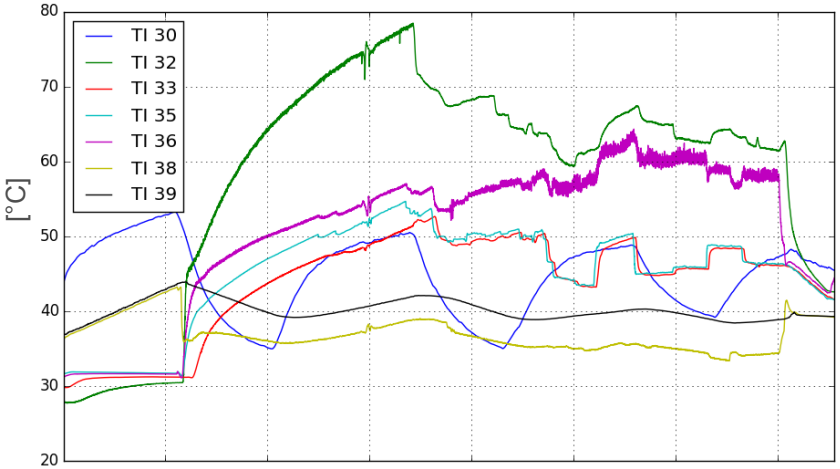

Overall pressure

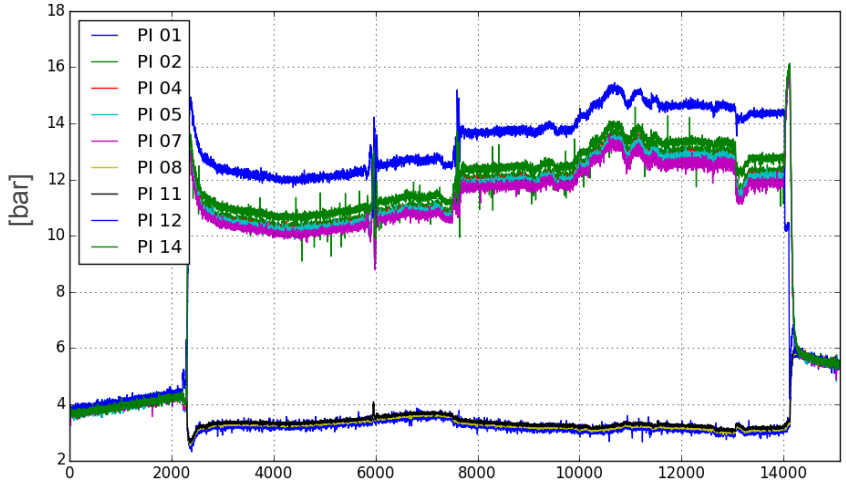

COP

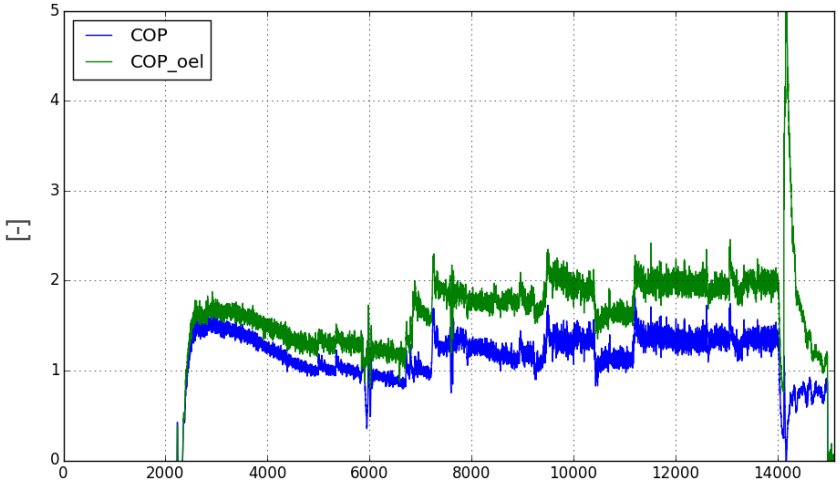

Conclusion

EUROPEAN HEAT PUMP SUMMIT

Summary:

- Working high temperature heat pump for industrial use
- $\mathrm{NH_3/H_2O}$ mixture + synth. Oil suitable
- Supply of $\Delta T \approx 40\ K$ possible
- Expected COP of 4-6

ToDos:

- Build up main control & extensions
- Optimize resobtion
- Solve cavitation problem (new liquid pump?)

STEFFEN HARTMANN RECYCLINGTECHNOLOGIEN GMBH
Schmiedegassenweg 4
D-06502 Thale OT Allrode

Tel: 039487 7477 0

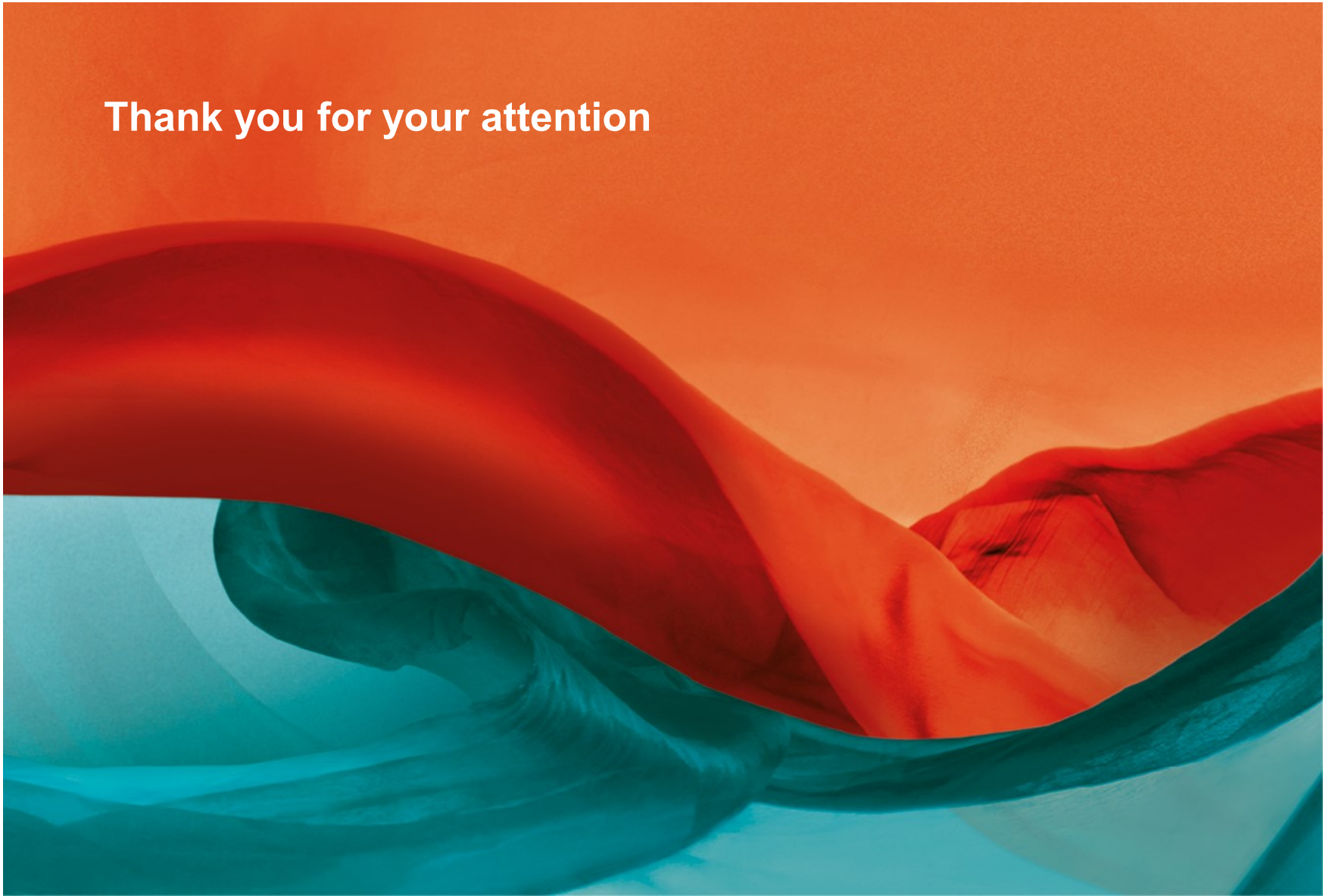

Thank you for your attention