EUROPEAN HEAT PUMP SUMMIT

POWERED BY CHILLVENTA

SYMPOSIUM + EXPO
NUREMBERG, 20–21.10.2015

Industrial | Commercial | Residential
Heating & Cooling | Components & Equipment

hp-summit.de

NÜRNBERG MESSE

Operation of a Testing Station for High Temperature Heat Pumps

Magdalena Wolf, Benedikt Kogler, David Wöß, Tobias Pröll

University of Natural Resources and Life Sciences, Vienna
Department of Material Sciences and Process Engineering

Content

EUROPEAN HEAT PUMP SUMMIT

- Vision: Energy Efficient Industry
- Why High Temperature Heat Pumps?
- Testing High Temperature Heat Pumps
  - Construction of a High Temperature Heat Pump Test Station
  - Innovation
  - System Components
  - Evaluation and First Results

Vision:
Energy Efficient Industry

Vision: Energy Efficient Industry

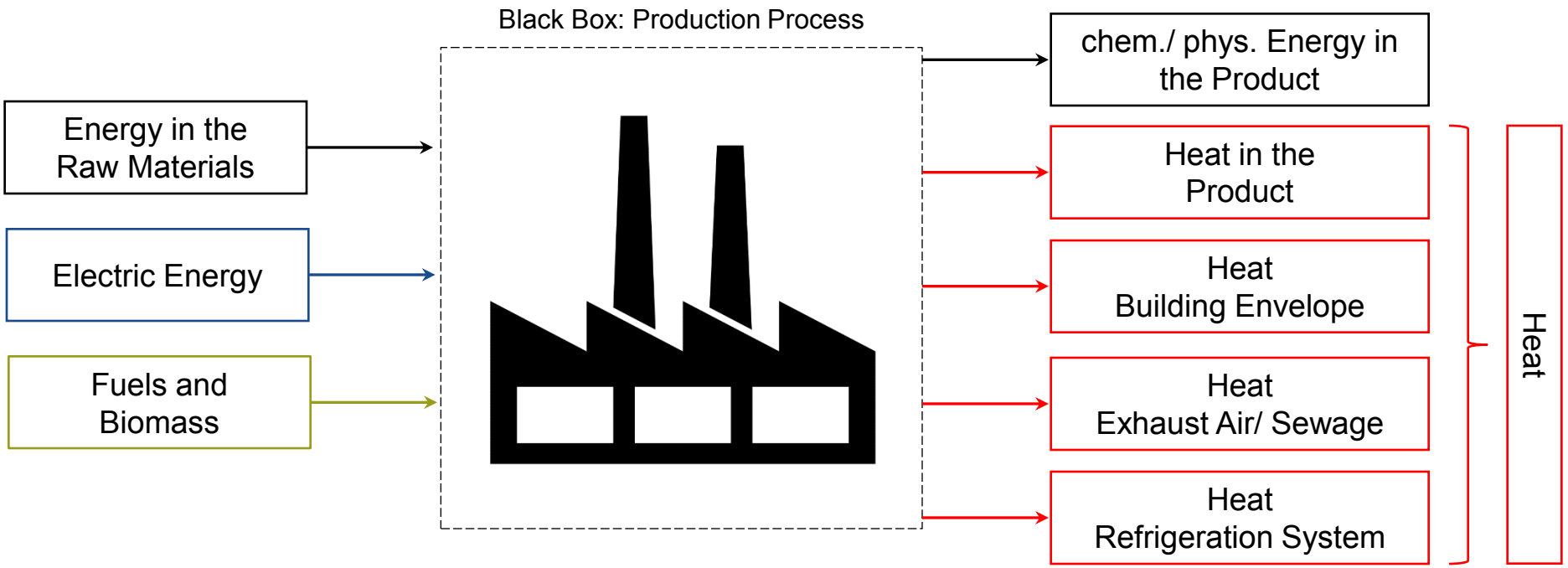

- Process Heat
- Space Heat
- Cooling & Refrigeration
- Lighting
- Actuation

Vision: Energy Efficient Industry

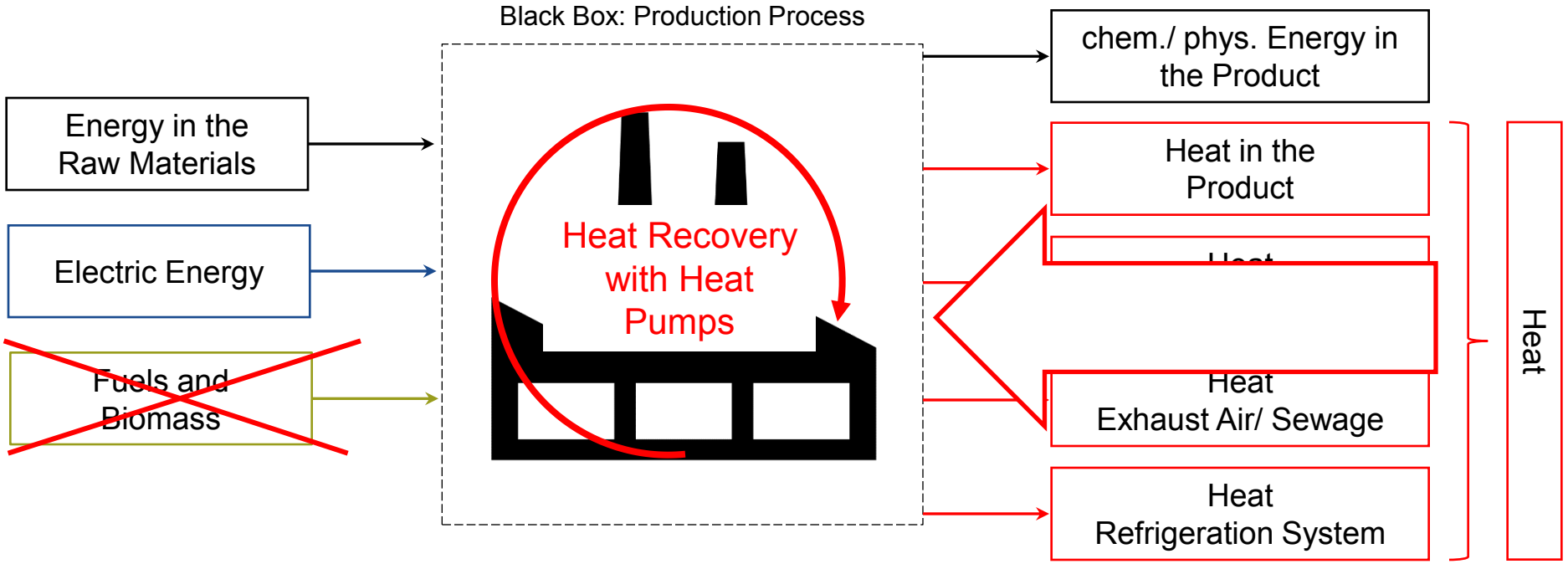

- Utilization of Waster Heat at Middle Temperature Levels
- Raising the Temperature Level of the Heat trough Contribution of Exergy
- Return the Heat into the Process via High Temperature Heat Pump Systems
- Saving (fossile) fuels

Vision: Energy Efficient Industry

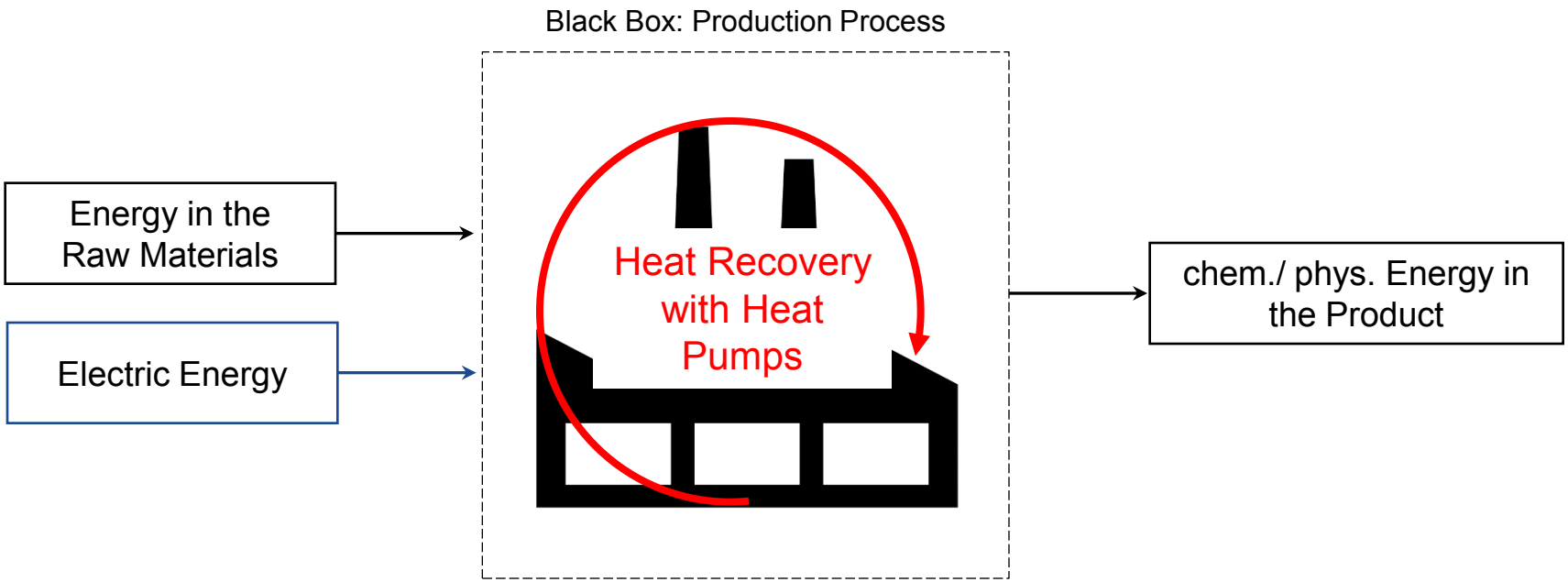

Exergy Optimized Process in the Future

Why High Temperature Heat Pumps?

Why High Temperature Heat Pumps?

EUROPEAN HEAT PUMP SUMMIT

Potential for High Temperature Heat Pumps in the Industry:

- Food and Beverages
- Flue Gas Condensation
- Chemical Industry
- Paper Industry
- Others

- Temperatures between 90°C and 140°C for Production Processes
- Energy Efficient Way to Provide Heat

Why High Temperature Heat Pumps?

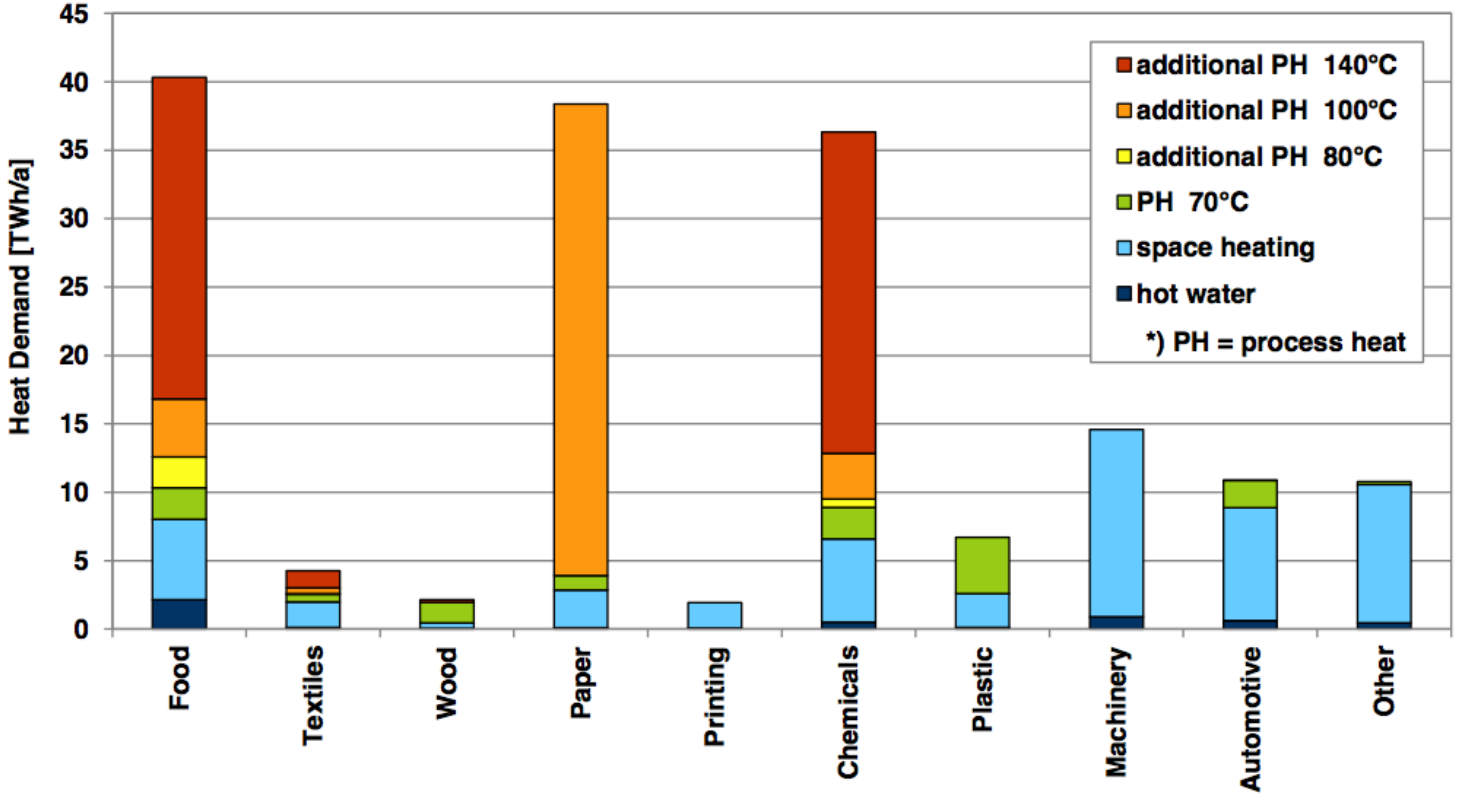

Quelle: Blesl et al. (2012)

Why High Temperature Heat Pumps?

EUROPEAN HEAT PUMP SUMMIT

Concept for a High Temperature Heat Pump

- First Loop: Driven with Ammonia as Refrigerant
  - Evaporator Temperature NH_3: 30°C
  - Condensation Temperature NH_3: 85°C
- Second Loop: Driven with Water as Refrigerant
  - Evaporator Temperature H_2O: 80°C
  - Condensation Temperature H_2O : 150°C
- Comparison of
  - COP
  - Power
  - Volumetric Heating Capacity

High Temperature Heat Pump System

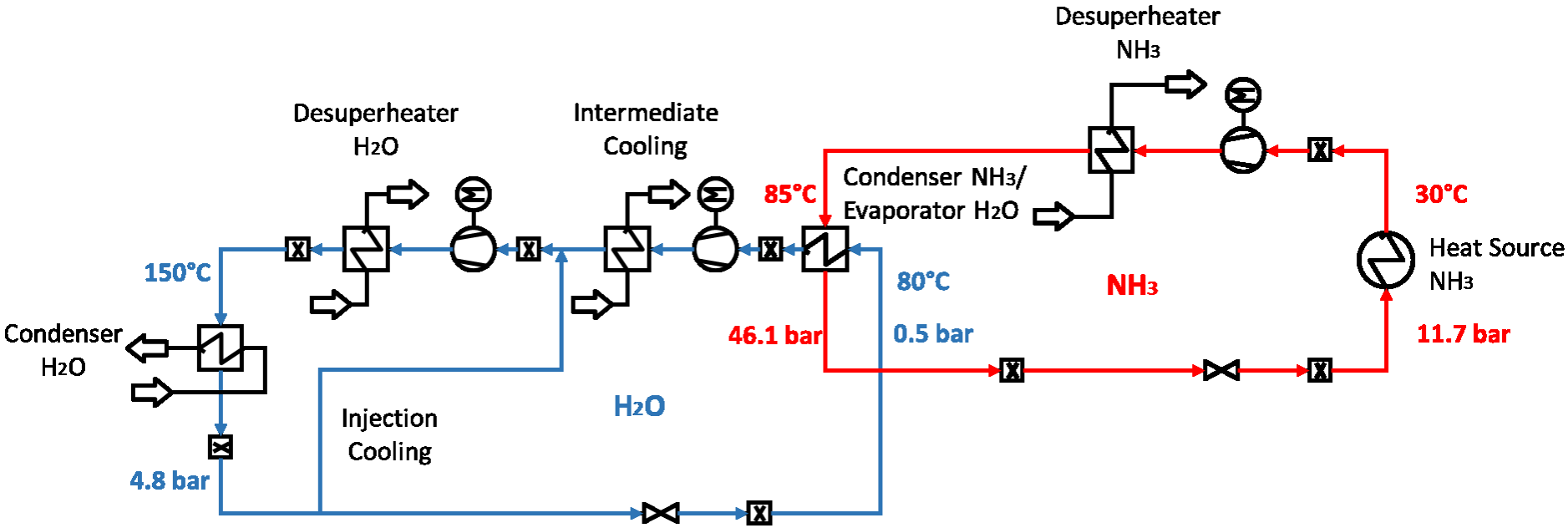

Isentropic Compressor Efficiency	80	[%]
Temperature Difference C/E	5	[K]

Results of the Simulation

P_{el_Total}	69.9	[kW]
$\dot{Q}_{Quelle}$	100	[kW]
$\dot{Q}_{Desuperheater\ NH_3}$	0.0	[kW]
$\dot{Q}_{C/E}$	130.2	[kW]
$\dot{Q}_{Intermediate\ Cooling}$	13.0	[kW]
$\dot{Q}_{Desuperheater\ H_2O}$	15.4	[kW]
$\dot{Q}_{Condenser\ H_2O}$	138.0	[kW]

COP NH_3	4.10	[-]
COP H_2O	4.37	[-]
COP Total	2.38	[-]
Vol. Heat. Capacity NH_3	10101	[kJ/m³]
Vol. Heat. Capacity H_2O 1	755	[kJ/m³]
Vol. Heat. Capacity H_2O 2	2201	[kJ/m³]

Testing High Temperature Heat Pumps

Testing High Temperature Heat Pumps

EUROPEAN HEAT PUMP SUMMIT

- Testing of Heat Pumps in General
  - Parameters according to DIN EN 14511
- New and Innovative Way to Test Heat Pumps
- Constructed for High Temperature and Pressure Levels
- Limit of the Heat Pump Testing Station
  - 45 kW Cooling Capacity of the Heat Pump

Innovation

EUROPEAN HEAT PUMP SUMMIT

- Heat Pump Testing in a Closed Cycle
- 2 Closed Cycles
  - Heat Source Cycle
  - Heat Sink Cycle
- Heat Return from Heat Sink Cycle to Heat Source Cycle depending to the Cooling Capacity of the Heat Pump
- Dissipation of Heat to the Environment Equivalent to the Electric Power of the Heat Pump
- Regulation of Flow Temperature in the Heat Source Cycle and Flow Temperature in the Heat sink Cycle

Innovation

EUROPEAN HEAT PUMP SUMMIT

- Designed for High Temperature Heat Pump Systems
  - 150°C and 32 bar
- Energy Efficient System
  - Heat According to the Cooling Capacity of the Heat Pump is Moved Back from the Heat Sink Cycle to the Heat Source Cycle
  - Possibility of Feeding-In the Excess Heat into the Local Heating System

Construction of a High Temperature Heat Pump Test Station

EUROPEAN HEAT PUMP SUMMIT

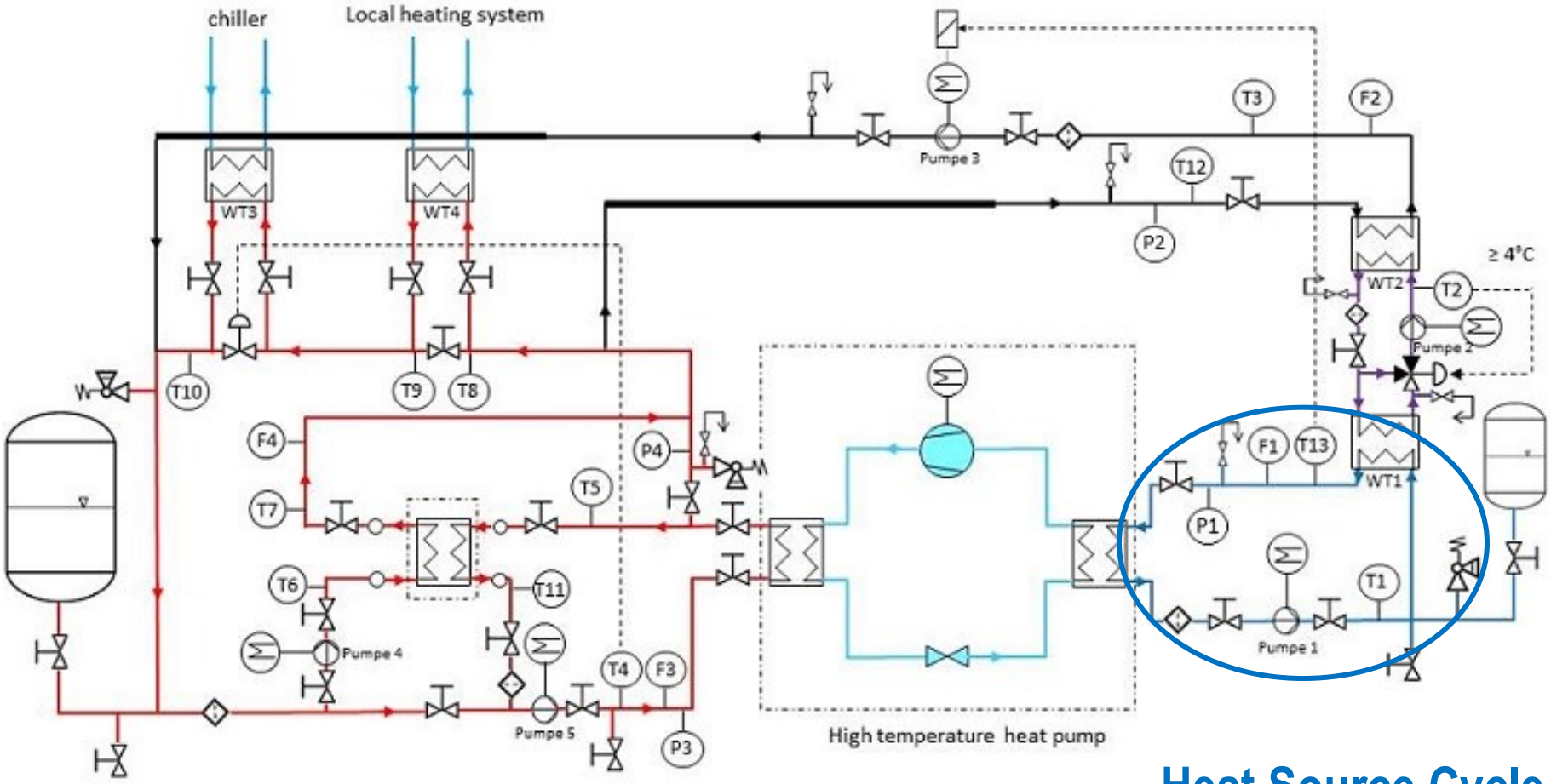

Heat Source Cycle

System Components

EUROPEAN HEAT PUMP SUMMIT

Heat Source Cycle

- Heat Source for the Heat Pump
- Closed Cycle Filled with Water or Glycol (depending to the Type of the Heat Pump)
- Operation with Glycol allows Testing Small Refrigeration Systems
- Flow Temperature to the Heat Pump Regulated with Mass Flow Control of the Pump in the Heat Recirculation System

Construction of a High Temperature Heat Pump Test Station

EUROPEAN HEAT PUMP SUMMIT

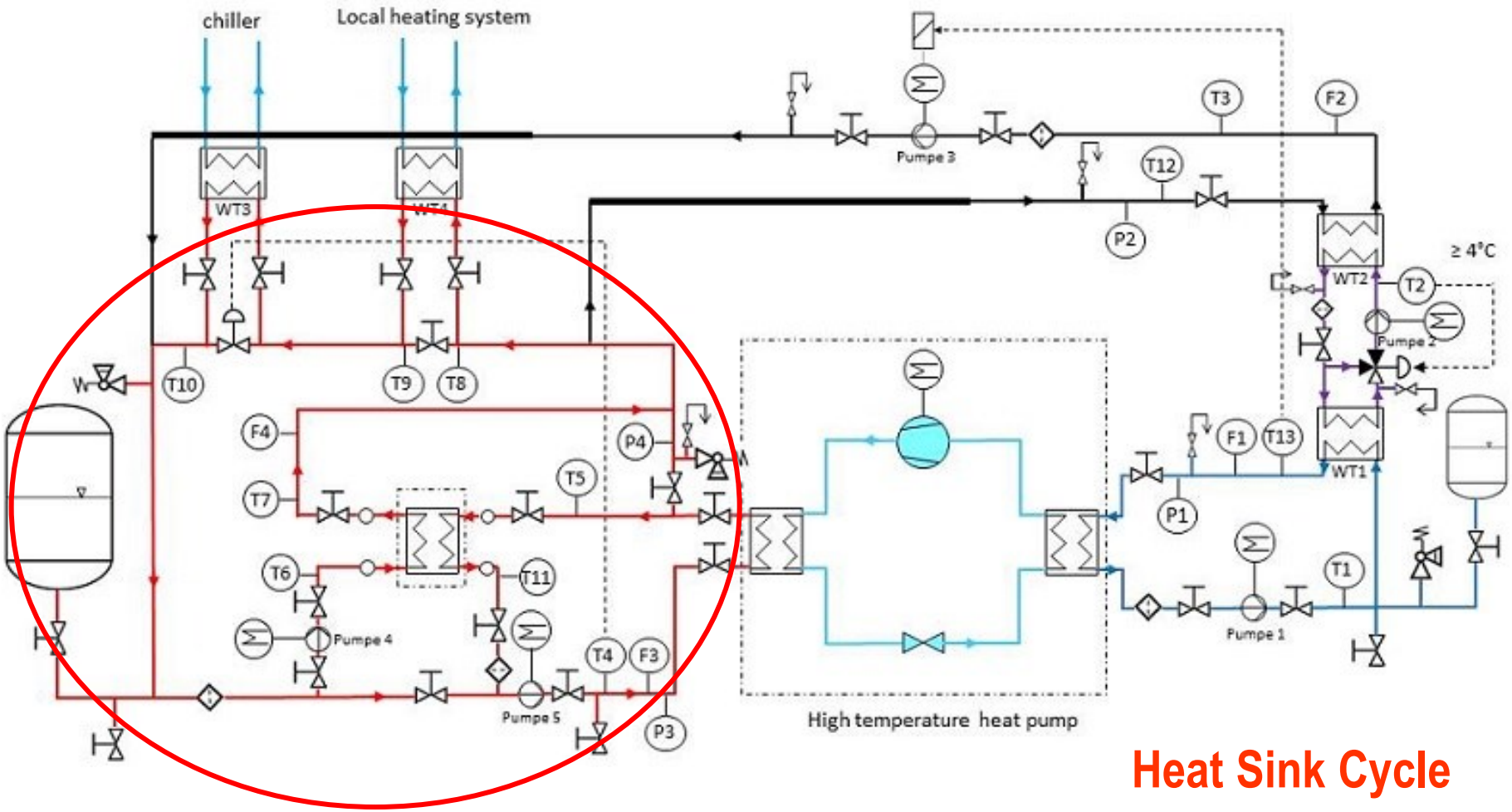

Heat Sink Cycle

System Components

EUROPEAN HEAT PUMP SUMMIT

Heat Sink Cycle

- Heat Sink of the Heat pump
- Closed Cycle Filled with Water
- Temperature in the System up to 150°C
- Pressure in the System up to 32 bar
- Flow Temperature to the Heat Pump Regulated with Mass Flow Control of the Cooling System

Construction of a High Temperature Heat Pump Test Station

EUROPEAN HEAT PUMP SUMMIT

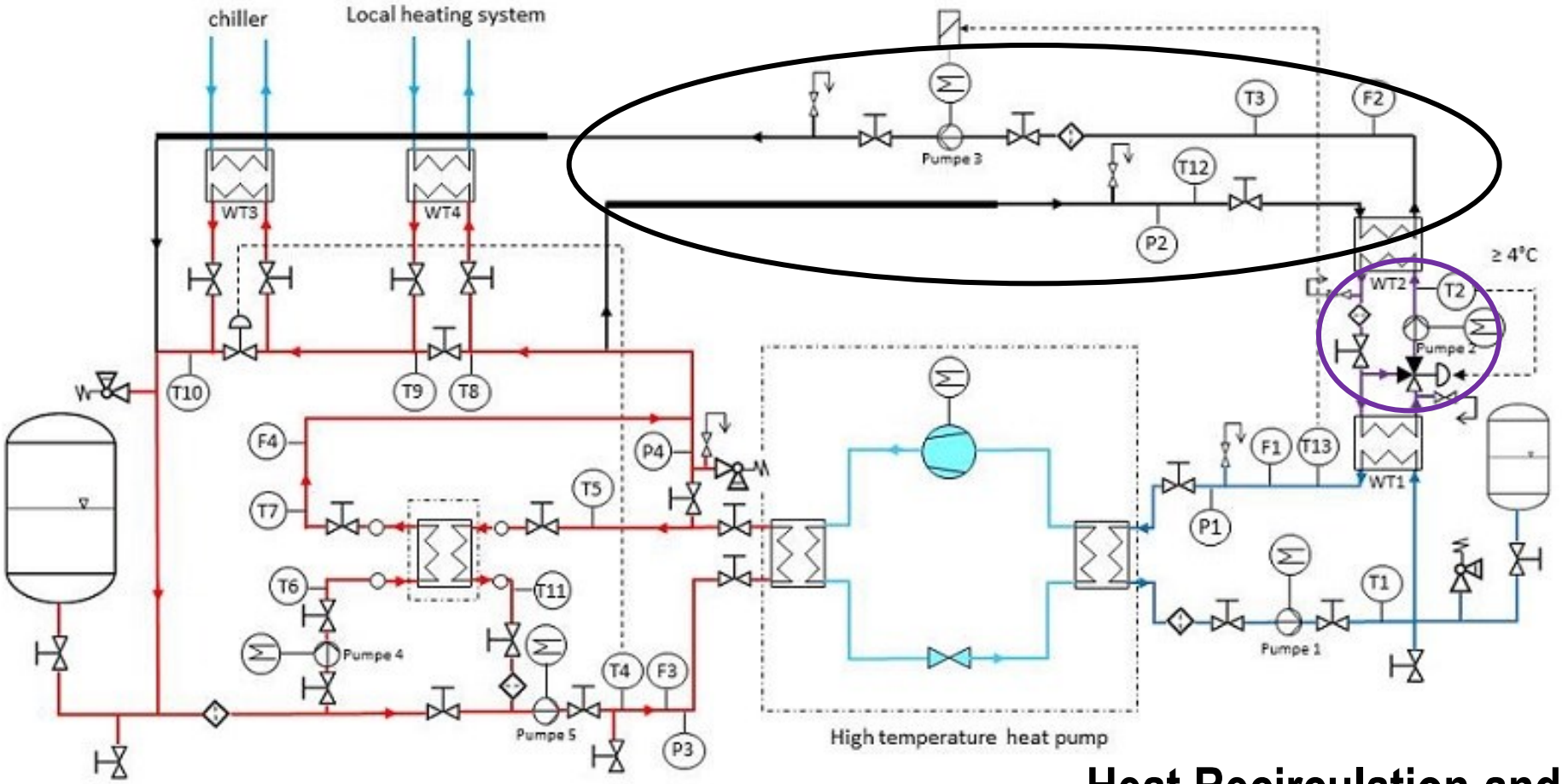

Heat Recirculation and Intermediate Circuit

System Components

EUROPEAN HEAT PUMP SUMMIT

Heat Recirculation System

- Heat form the Heat Sink Cycle is Moved Back via Heat Exchanger to the Heat Source Cycle
- The Mass Flow in the Recirculation System controls the Flow Temperature in the Heat Source Cycle

Intermediate Circuit

- Measure that the Heat Exchanger in the Recirculation System doesn´t Freeze
- Filled with Glycol
- Temperature controlled 3 – Way Valve regulates the flow in the Circuit

Construction of a High Temperature Heat Pump Test Station

EUROPEAN HEAT PUMP SUMMIT

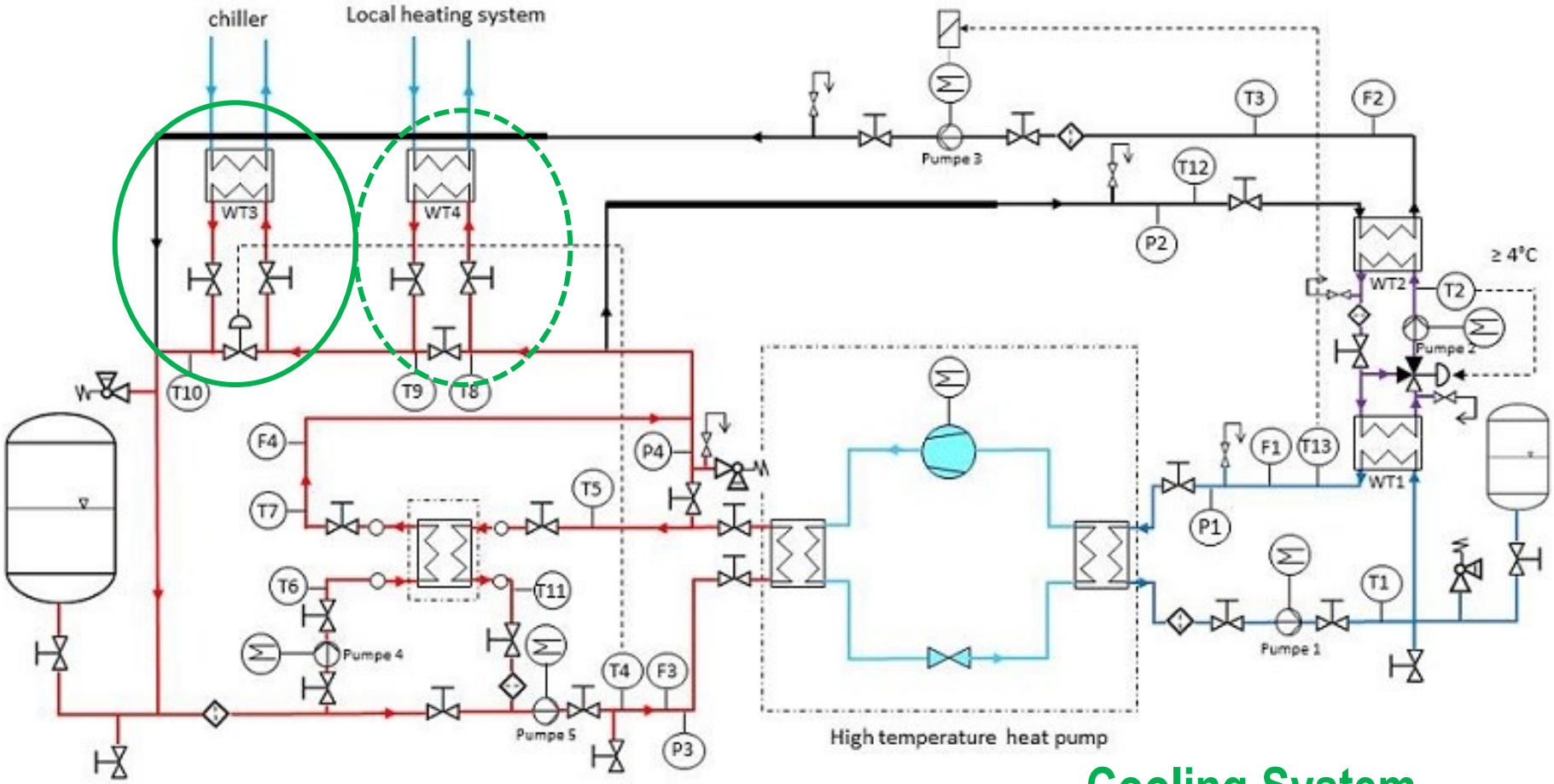

Cooling System

System Components

EUROPEAN HEAT PUMP SUMMIT

Cooling System

- Cooling of the Heating Circuit to the Environment
- Heat Amount According to the Input of Electric Energy of the Heat Pump
- Possibility to Provide the Local Heating System with Heat

System Components

Evaluation and First Results

EUROPEAN HEAT PUMP SUMMIT

- Evaluation of the test station goes on
  - Evaluation of the controll system
  - Controll of the valves and pumps
  - Handle the Problem with the Oscillation

- Results of the first measures
  - Temperature curve
  - COP at W15/W35

Evaluation and First Results

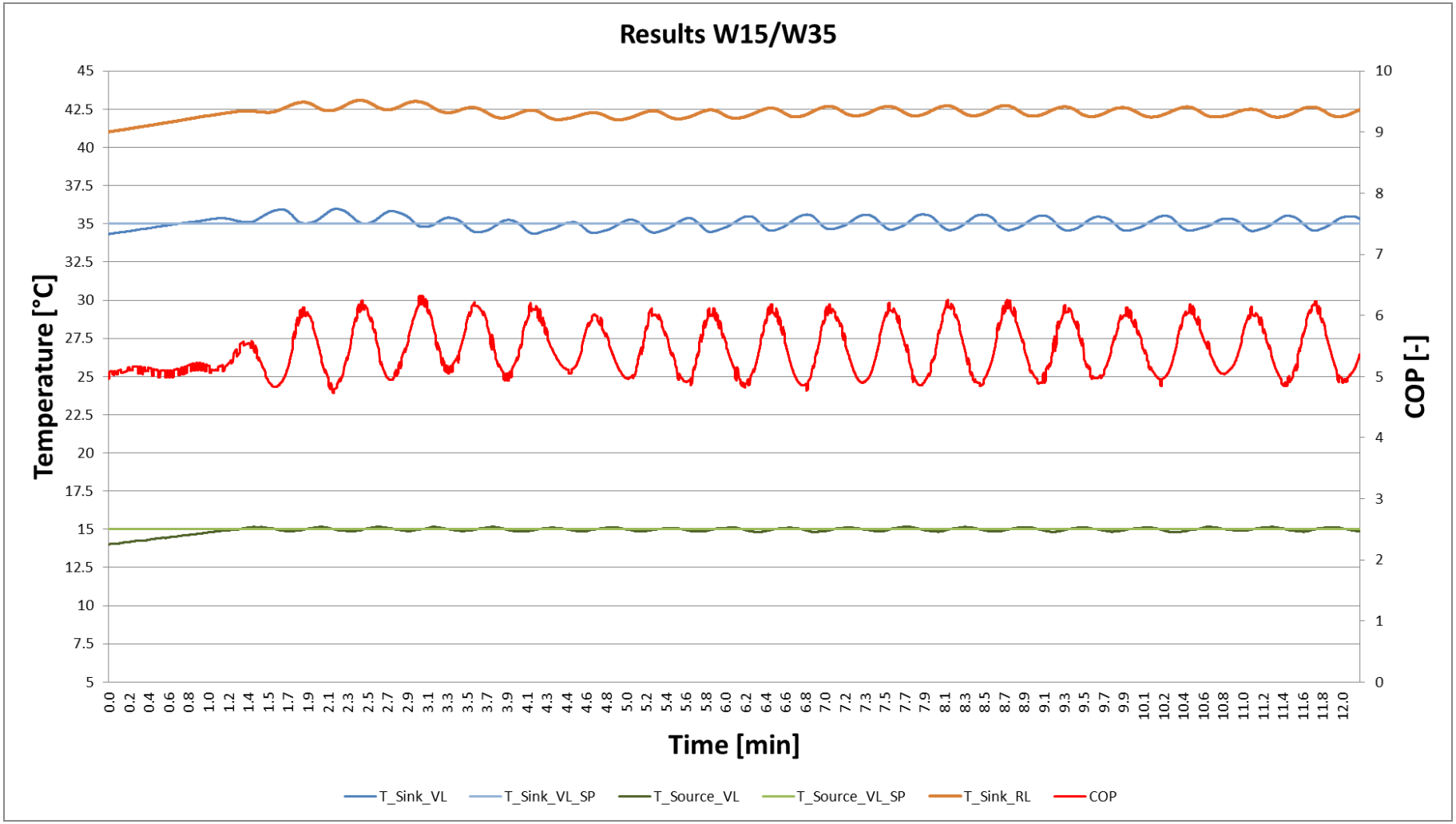

Thanks

EUROPEAN HEAT PUMP SUMMIT

Thanks to Fa. Ochsner for providing a heat pump to evaluate the heat pump testing station!

OCHSNER
WÄRMEPUMPEN

Thanks to Fa. Großfurtner in the framework of the project „Exergieoptimierter Schlachthof“!

GROSSFURTNER

University of Natural Resources and Life Sciences, Vienna

Department of Material Sciences and Process Engineering
Institute for Chemical and Energy Engineering

DI Magdalena Wolf

Peter Jordan Straße 82, A-1190 Vienna
Tel.: +43 1 47654-3534
magdalena.wolf@boku.ac.at , www.boku.ac.at

University of Natural Resources
and Life Sciences, Vienna
Department of Material Sciences and
Process Engineering

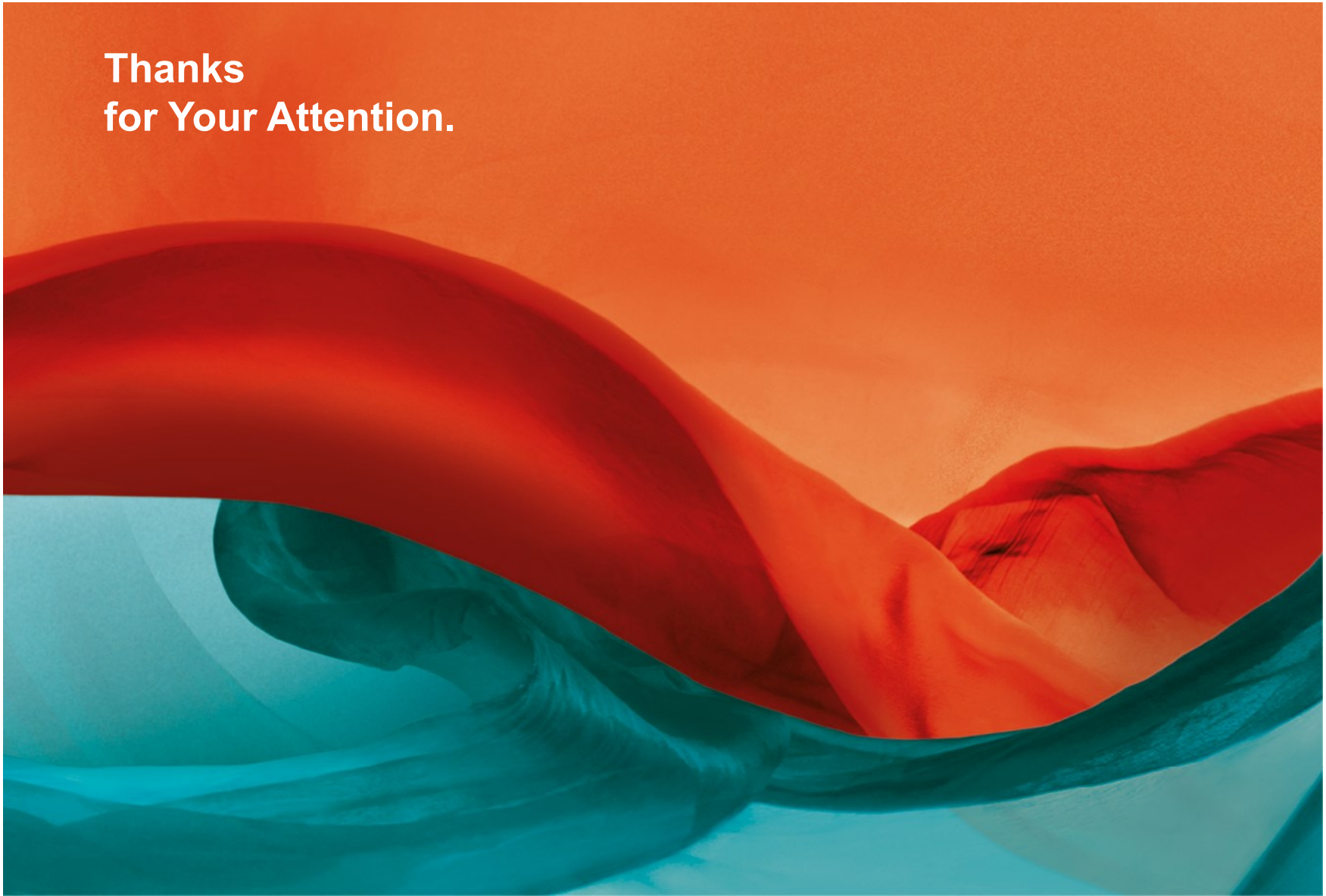

Thanks
for Your Attention.