EUROPEAN HEAT PUMP SUMMIT

POWERED BY CHILLVENTA

SYMPOSIUM + EXPO
NUREMBERG, 20–21.10.2015

Industrial | Commercial | Residential
Heating & Cooling | Components & Equipment

hp-summit.de

NÜRNBERG MESSE

Gewerbliche und industrielle WP - Anwendungen weltweit (IEA HPP Annex 35)

EUROPEAN HEAT PUMP SUMMIT

Dr.- Ing. Rainer M. Jakobs
IZW e.V.

Annex 35-13

Erläuterung des Inhalts

Teilnehmer

Aufgaben

Ergebnisse

Bericht: Download auf der IZW-Webseite

IEA HPP - IETS Annex 35/13: Application of industrial Heat Pumps

- As a joint venture of the IEA Implementing Agreements Industrial Energy-related Technologies and Systems (IETS) and Heat Pump Programme (HPP)
- 9 IEA countries
- 15 participating organizations
- Operating agent: IZW e.V. Germany
- Start date: 01st May 2010
- End date: 30th April 2014
- Report: 31st October 2014

Heat Source and Heat Sink in Industrial Heat Pumps

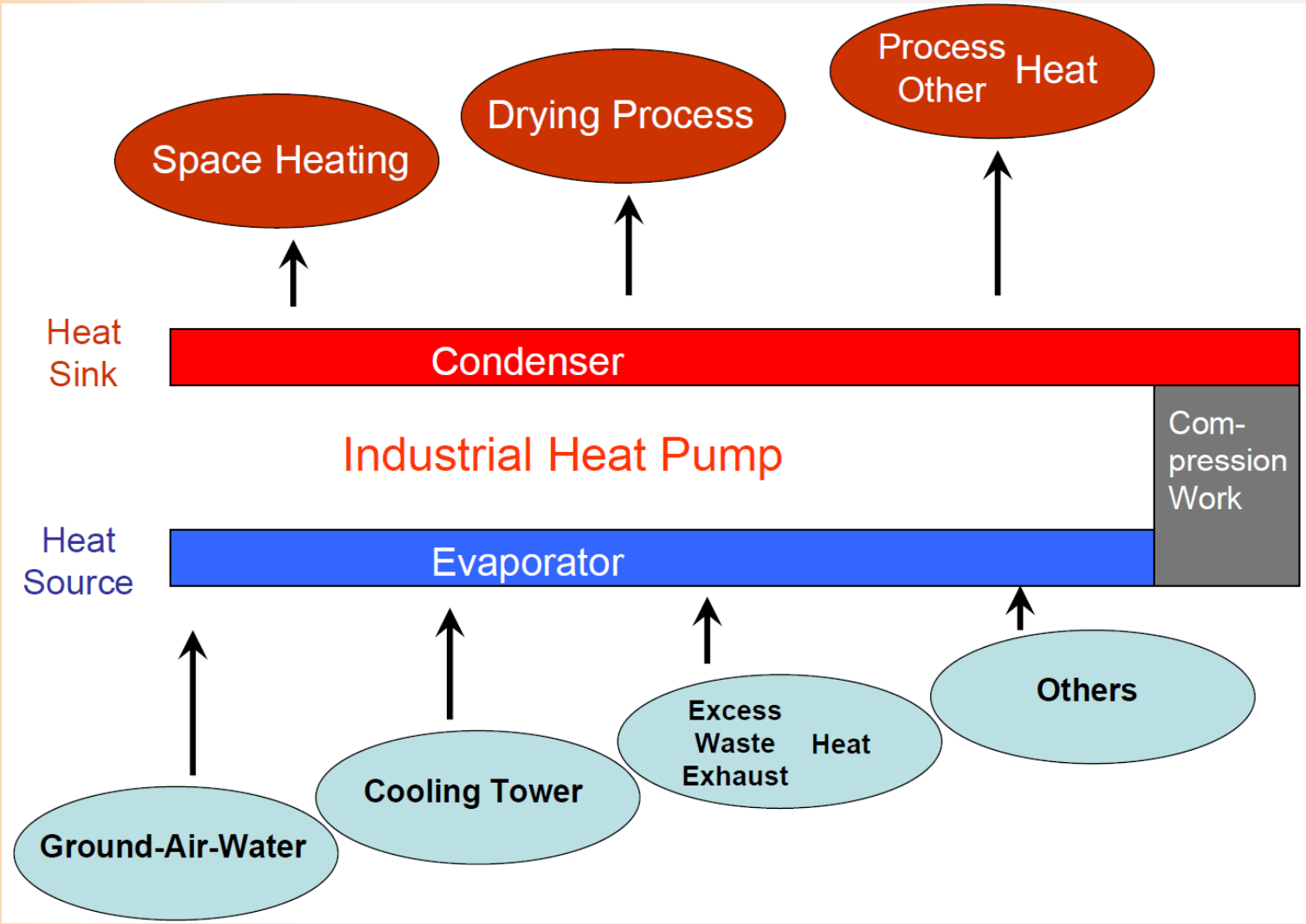

IEA HPP IETS Annex 35-13

Tasks Structure

- **Task 1:** Market overview, barriers for application
- **Task 2:** Modeling calculation and economic models
- **Task 3:** Technology, high temperature heat pumps, process technological integration, refrigerants
- **Task 4:** Application and monitoring, easy to install standard solutions, operating experience, energy effects
- **Task 5:** Communication, awareness of potential (policy paper), internet, database, training

Programme of work

concentrated on the collection of statistical energy and environmental data and information as well as the present status of R&D and the application of heat pumps in industry.

A total of **39 R&D projects** and **115 applications** of heat pumps in industry, in particular the use of waste process heat as the heat source, have been presented and analyzed by the participating countries.

Results – Final Report

Content

	Page No
Executive Summary	3
Basics of IHP	13
Task 1: Country Reports	29
Heat Pump energy situation, Energy use, Market overview	
Barries for application	
Task 2: Modeling calculation and economic models	129
Task 3: R&D Projects	205
Task 4: Case Studies	383
Appendix: Japan and The Netherlands	
Task 5: Communications	647
Appendix: Policy Paper	681

IEA HPP IETS Annex 35-13

Results - Final Report

Task	Members		Sum.	Intro.	OA	A	CDN	DK	F	D	Jap	Korea	NL	S	Total pages
	Cover and Content	Pages			**2**										**2**
	Executive Summary	Pages			**10**										**10**
	Basics of IHP	Pages			17										**17**
1	**HP Energy situation, energy use, market overview, barriers for application**	Pages	1-5	6-9		10-24	25-31	32-37	38-50	51-63	64-70	71-77	78-93	94-100	100
2	**Modeling calculation + economic models**	Pages		1-29		30-34			35-57				58-76		76
3	**R & D Projects**	Pages	7	12		13--25	26-55	56-75	76-89	90-106	107-148	149-159	160-178		178
4	**Case studies**	Pages	9	14		15-47	48-80	81-94	95	96-148	149-185	186-197	198-214		214
	Appendix	Pages									16		34		46
5	**Communication, awareness of potential**	Pages		1-4		5-16							8		34
	Publication	Pages			17-26										
	Annex Meetings	Pages			27-27										
	Workshops	Pages			28-34										
	Policy Paper	Pages			1-12										12
												Total pages:			**689**

IEA HPP IETS Annex 35-13

Results - Final Report

Task	Members		Sum.	Intro.	OA	A	CDN	DK	F	D	Jap	Korea	NL	S	Total pages
	Cover and Content	Pages			2										2
	Executive Summary	Pages			10										10
	Basics of IHP	Pages			17										17
1	HP Energy situation, energy use, market overview, barriers for application	Pages	1-5	6-9		10-24	25-31	32-37	38-50	51-63	64-70	71-77	78-93	94-100	100
2	Modeling calculation + economic models	Pages		1-29		30-34			35-57				58-76		76
3	R & D Projects	Pages	7	12		13--25	26-55	56-75	76-89	90-106	107-148	149-159	160-178		178
4	Case studies	Pages	9	14		15-47	48-80	81-94	95	96-148	149-185	186-197	198-214		214
	Appendix	Pages									16		34		46
5	Communication, awareness of potential	Pages		1-4		5-16							8		34
	Publication	Pages			17-26										
	Annex Meetings	Pages			27-27										
	Workshops	Pages			28-34										
	Policy Paper	Pages			1-12										12
												Total pages:			689

Workshops/Conference contributions/papers

Publications related to IHP

Austria	**9**
Canada	**23**
France	**3**
Germany	**20**
Japan	**17**
Different Countries	**13**

Task 1:

Heat Pump Energy situation, energy use, market overview, barriers for application

A, CDN, DK, F, D, Japan, Korea, NL, S

IEA HPP IETS Annex 35-13

3 Austria 3-10

3.1 Industrial Energy use in Austria 2009 3-10

3.1.1 Energy use in the manufacturing industry 3-12
3.1.2 Heat demand of Austrian Industry 3-15
3.1.3 References 3-15

3.2 Market overview 3-15

3.2.1 Austrian Industry 3-15
3.2.2 Process temperatures in the Austrian Industry 3-16
3.2.3 Overview of the Austrian industrial heat pump market 3-19
3.2.4 Energy prices 3-20
3.2.5 Legal documents 3-21
3.2.6 Funding of industrial heat pumps in Austria 3-22

3.3 Barriers for applications 3-22

3.4 Literature 3-23

Industrial heat demand in Germany

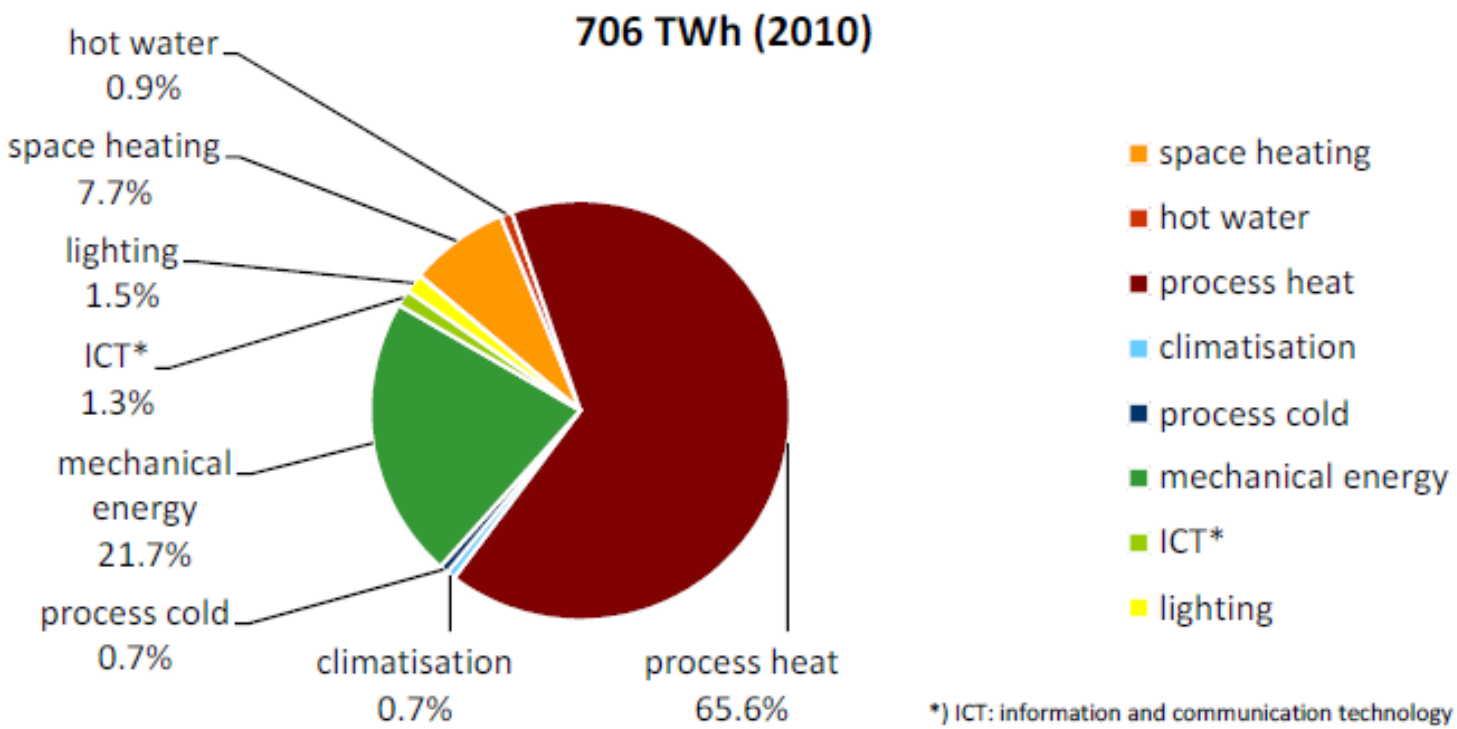

*) ICT: information and communication technology

Source: BMWi 2012

- In the German industry 74 % of the final energy is needed in form of heat.
- The industry causes 28 % of the German final energy demand (2,517 TWh in 2010).

Task 3:

R&D Projects

A, CDN, DK, F, D, Japan, Korea, NL

Japan:

High Temperature Heat Pump

DUAL-CYCLE HEAT PUMP WATER HEATER (AIR-TO-WATER)

A new industrial heat pump system was developed, which uses R-410A and R-134a in a dual cycle. This system has a coefficient of performance (COP) of 3.0 when keeping heat in the storage tank.

IEA HPP IETS Annex 35-13

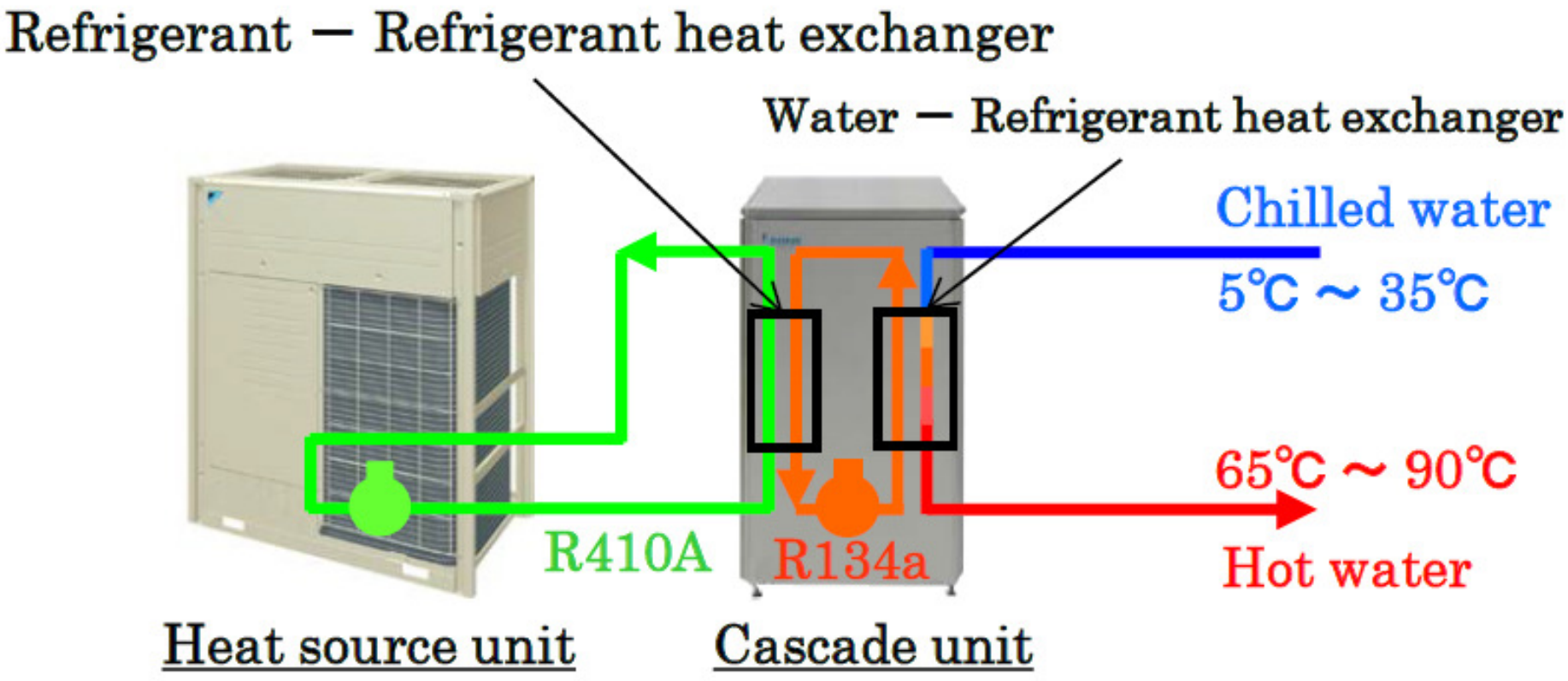

Figure 8-11: System flow

Refrigerants

name	components	ratio [m %]	ODP *	GWP *	NBP * [° C]	T_{crit} [° C]	p_{crit} [bar]	Savety classification
R410A	R32/R125 [a]	50/50 [a]	0 [b]	1730 [b]	-51.6 [a]	72.6 [b]	49.0 [b]	A1 [g]
R134a	$C_2H_2F_4$ [a]	-	0 [a]	1300 [a]	-26.1 [a]	101.0 [a]	40.6 [a]	A1 [g]
R245fa	$C_3H_3F_5$ [a]	-	0 [c]	950 [c]	15.3 [a]	154.0 [c]	36.4 [c]	B1 [e]
R717	NH_3 [g]	-	0 [g]	0 [g]	-33.0 [g]	133.0 [g]	114.2 [a]	B2 [g]
R744	CO_2 [g]	-	0 [g]	1 [g]	-57.0 [g]	31.0 [g]	73.8 [a]	A1 [g]
SES36	R365mfc/PFPE [f]	65/35 [f]	0 [f]	3126 [f]	35.6 [f]	177.6 [f]	28.5 [f]	unknown
DR-2	unknown	-	0 [d]	9,4 [d]	33.4 [d]	171.3 [d]	29.0 [d]	A1 (expected) [d]

**) ODP: Ozone Depletion Potential GWP: Global Warming Potential NBP: Normal Boiling Point*

Quellen:
a) IFA, b) Solvay Fluor GmbH 2010, c) Honeywell International Inc. 2010, d) Kontomaris 1/10/2011,
e) Klein 2009, f) Riva et al. 2006, g) Bitzer Kühlmaschinenbau GmbH 2010

Task 4: Case studies

A, CDN, DK, F, D, Japan, Korea, NL

IEA HPP /IETS Annex 35 / 13
Application of Industrial Heat Pumps

French industrial heat Pump developments applied to heat recovery

J-L Peureux, F Sicard, D Bobelin.

12 Mai 2014, Montréal

GREATER MARKET WITH HIGHER TEMPERATURE

HP operating range

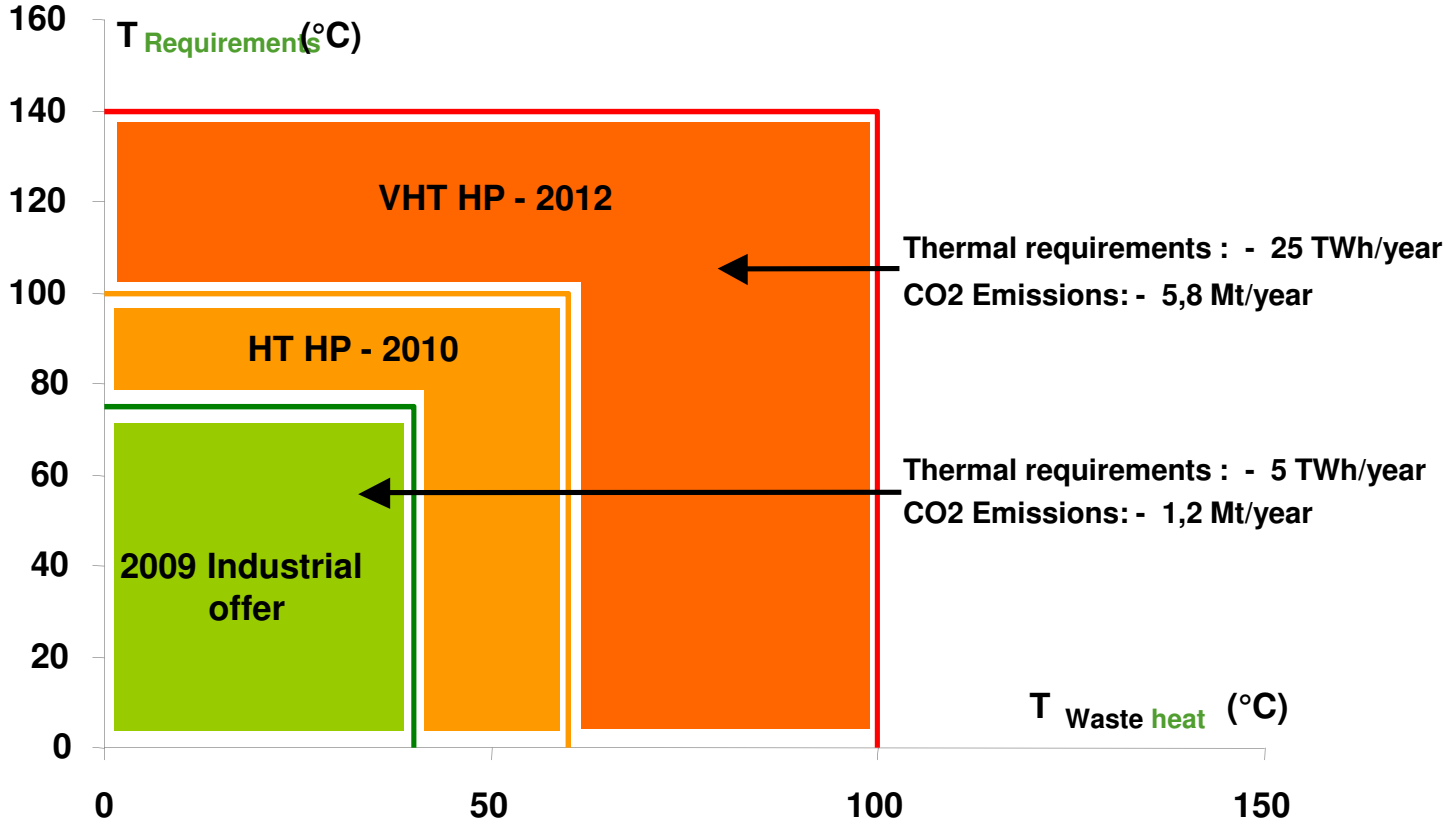

RESEARCH PROGRAM

Alter ECO Project

Partnership : Rhodia, Arkema, Danfoss, CIAT, GE

VHT HP
140°C – 250 kW

Integrator : CLAUGER

Technical Partnership

EDF /Johnson Controls

HT/VHT HP
100°C/120°C – 700 kW

Manufacturer : JCI

ANR PACO Project

Partnership : Johnson-Control, France Évaporation, CETHIL, AgroParistech, Matneca …

VHT HP with water
140°C – 700 kW

Manufacturer JCI/F-Évaporat

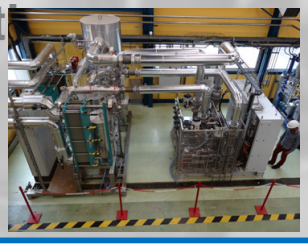

R245 fa: TEST REPORT - OPERATING RANGE

Screw prototype

- Compressor head:
  - Maximum: more than 80ºC
- Evaporation temperature :
  - Upper limit : 60ºC
- Condensation temperature :
  - Upper limit : 102ºC
- Performance for : 60/102ºC
  0,6 COP_{carnot}
- Heating capacity : 300kW to 500kW

Centrifugal prototype

- Compressor head :
  - Maximum: ~45ºC
- Evaporation temperature :
  - Upper limit : 55ºC
- Condensation temperature :
  - Upper limit : **95ºC**
- Performance for 55/95ºC
  0,62 COP_{carnot}
- Heating capacity : 900kW to 1200kW

- **Industrial HP offer is already available up to 100°C**
- **Both technologies are on test to reach 120°C**

CONCLUSIONS

- **Converting waste heat into hot water up to 100°C by a Heat Pump is nowadays an industrial reality.**

- **Converting waste heat into pressurized water or medium pressure steam up to 130°C will be possible very soon .**

Pioneering Industrial Heat Pump Technology in Japan

Choyu WATANABE, Chubu Electric Power Co., Inc.,
Yohji UCHIYAMA, University of Tsukuba,
Satoshi HIRANO, National Institute of Advanced Industrial Science and Technology (AIST),
Takeshi HIKAWA, Heat Pump & Thermal Storage Technology Center of Japan (HPTCJ)

Industrial Heat Pumps

- for hot water supply
- for hot air supply
- for re-heating of circulating water
- for steam generation

developed with a pioneer spirit
in Japan

Steam Supply Service in a Manufacturing Plant

At a company producing cars, auto parts, electrical equipment or food, steam is produced in the energy center, supplied to some factories and all areas of each factory and used in the manufacturing processes.

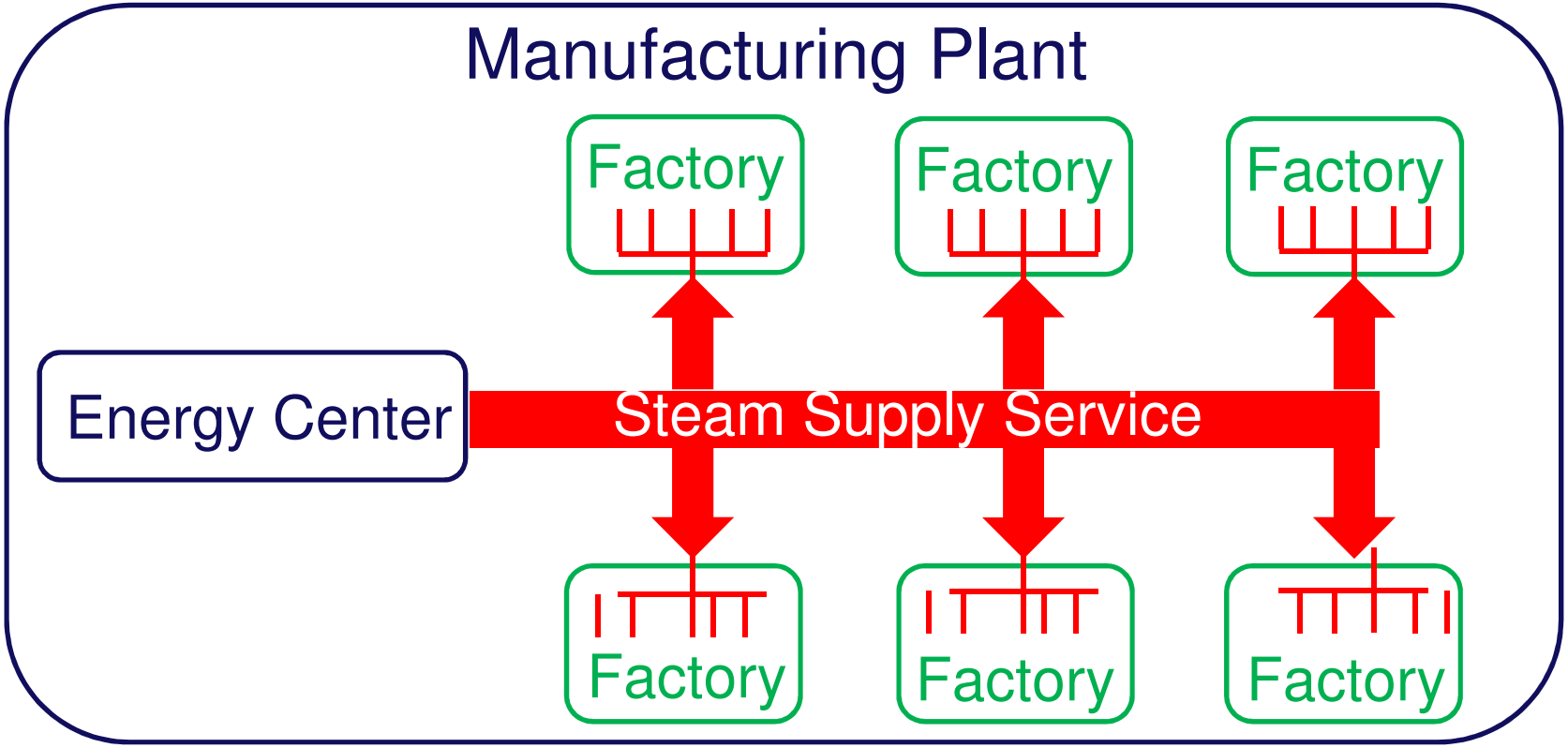

Total Energy Efficiency of Steam Supply Service

1. generally low (e.g. 20%-40%) due to various heat losses.
2. The most common temperature zone of the process using steam ranges between 55°C and 80°C.
3. Many electric heaters are used for these processes for which temperature control is required.

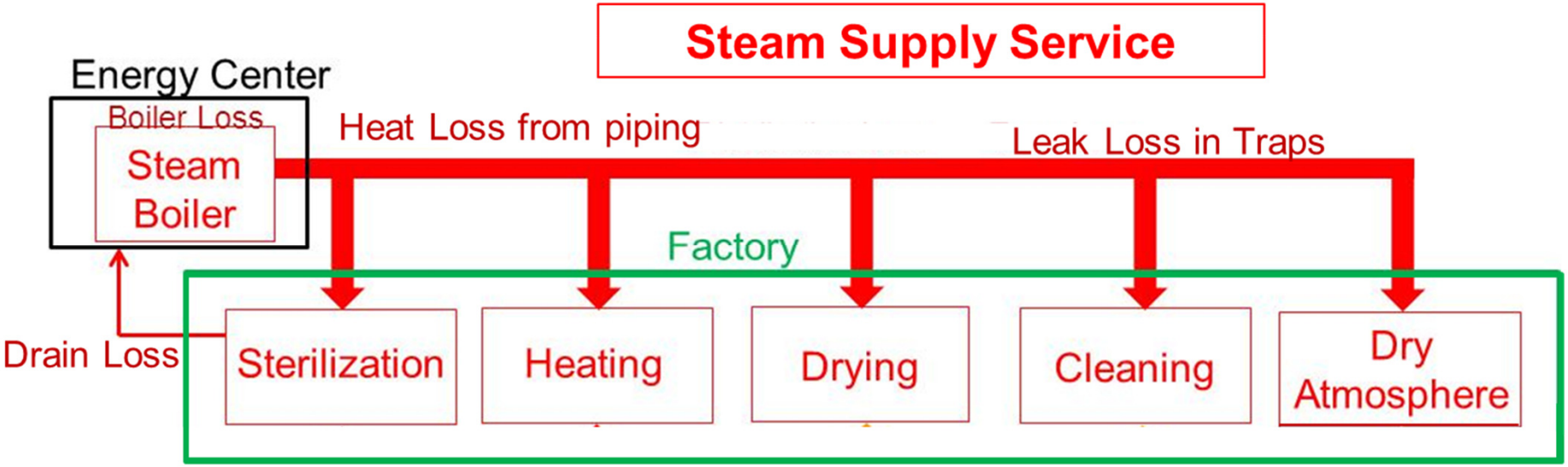

Significant energy savings are expected by replacing some steam supply service and electric heaters with

- **Distributed heat pumps**
- **Heat recovery; Simultaneous utilization of cooling and heating**
  Utilization of waste heat

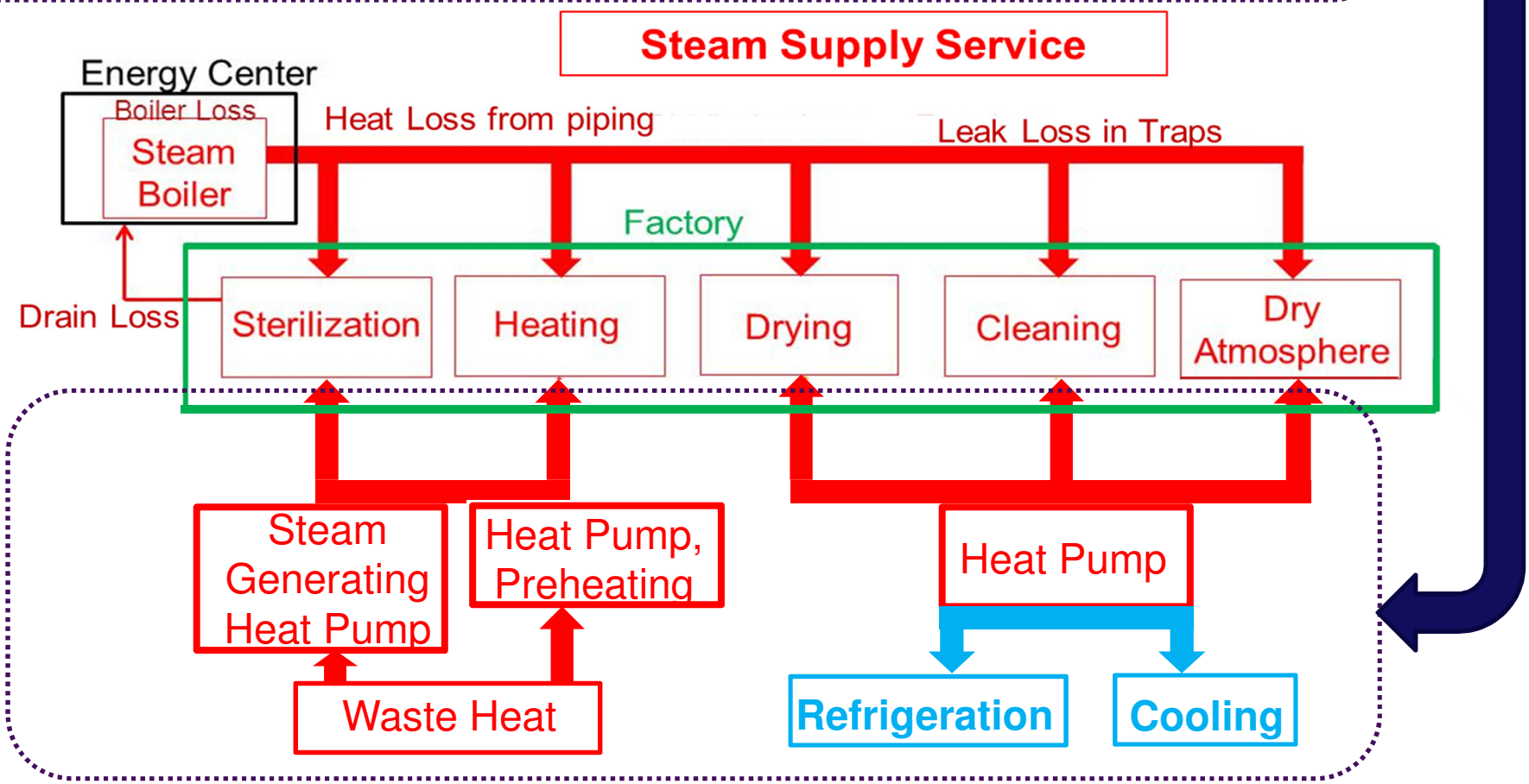

Cascade Reverse Rankine Cycle Heat Pump using R410A *

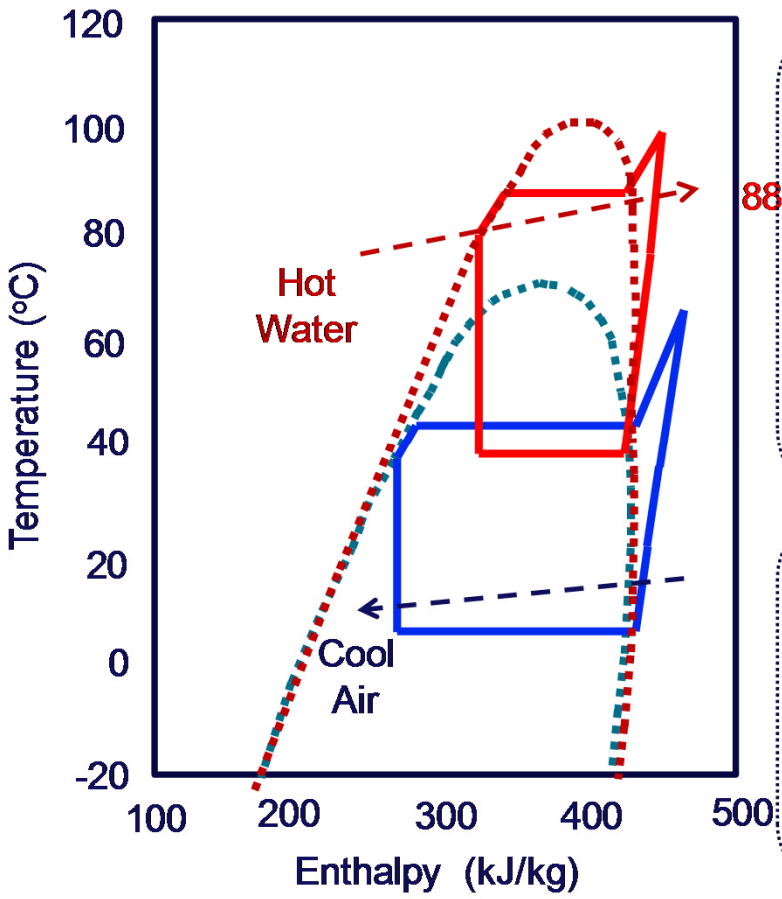

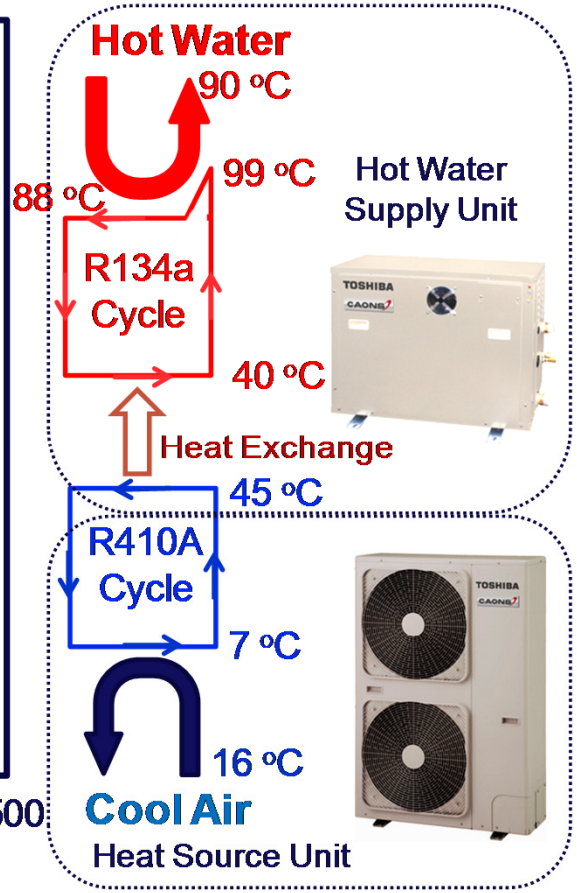

Specifications of the Heat Pump

Rated Heating Power (kW)	14.0
Rated COP*	3.5
Leaving Temperature Range (°C)	50 to 90
Ambient air temperature range (°C)	-15 to 43

*: Atmospheric Air Temperature: 25°C Dry Bulb, 21°C Wet Bulb, Entering Water Temperature: 60°C, Leaving Water Temperature: 65°C

*: Takayama, T., Suzuki, H., Iba, I., Hongou, I., Sakuraba, I., Miyaoka, Y. and Nakayama, H. (2012). "Development of High Temperature Water Circulation Type Heat Pump for Industries (Air-to-Water Heat Pump with a Maximum Output Water Temperature of 90 oC)", Proc. of the 2012 JSRAE Annual Conference, F122 (in Japanese)

Simultaneous Cooling and Heating Heat Pump for Noodle Production *

Industry	Frozen Noodle Production
Process	Boiling, Cooling
Application	Simultaneous Hot Water (83 °C) and Cold Water (10 °C) Supply
Purpose	Reduction of Boiler Steam (Fuel Light Oil)
System Overview	Water-to-Water Heat Pumps with CO_2 Refrigerant (2 Units) with Heating Capacity 72 kW, COP 3.1 (from 20 °C to 90 °C) and Cooling Capacity 50 kW, COP 2.0 (from 10 °C to 5 °C), total COP 5.1
Effect	Primary energy consumption was reduced by 19%.

Manufacturing processes of frozen noodles

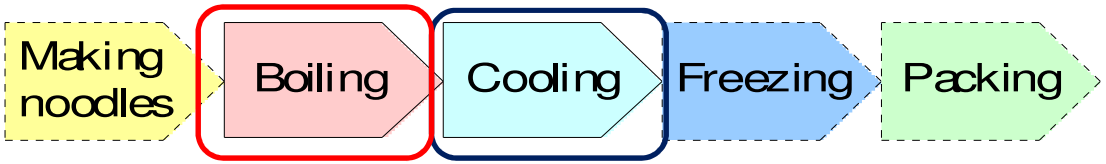

Water-to-Water Heat Pumps with CO_2 Refrigerant (2 units)

*: Yoneda, H. (March 2011). "The Operative Results of the Heat Pump Introduction in the Noodles Production Factory", Utilization Examples of Heat Pumps in Industry, JSRE Seminar Text Book.

Hybrid Vapor Recompression System for Alcohol Distillation *

Industry	Whisky and Material Alcohol Production
Process	Distillation
Application	Vapor Recompression
Purpose	Reduction of Boiler Steam (Fuel Crude Oil)
System Overview	Hybrid Vapor Recompression System (1 Unit) with Vapor Flow Rate 4 t/h
Effect	Primary energy consumption was reduced by 43%.

P_1: 1.5 MPa, 197°C	P_2: 0.039 MPa, 75°C
P_3, P_4: 0.066 MPa, 88°C	P_5: 0.137 MPa,140°C

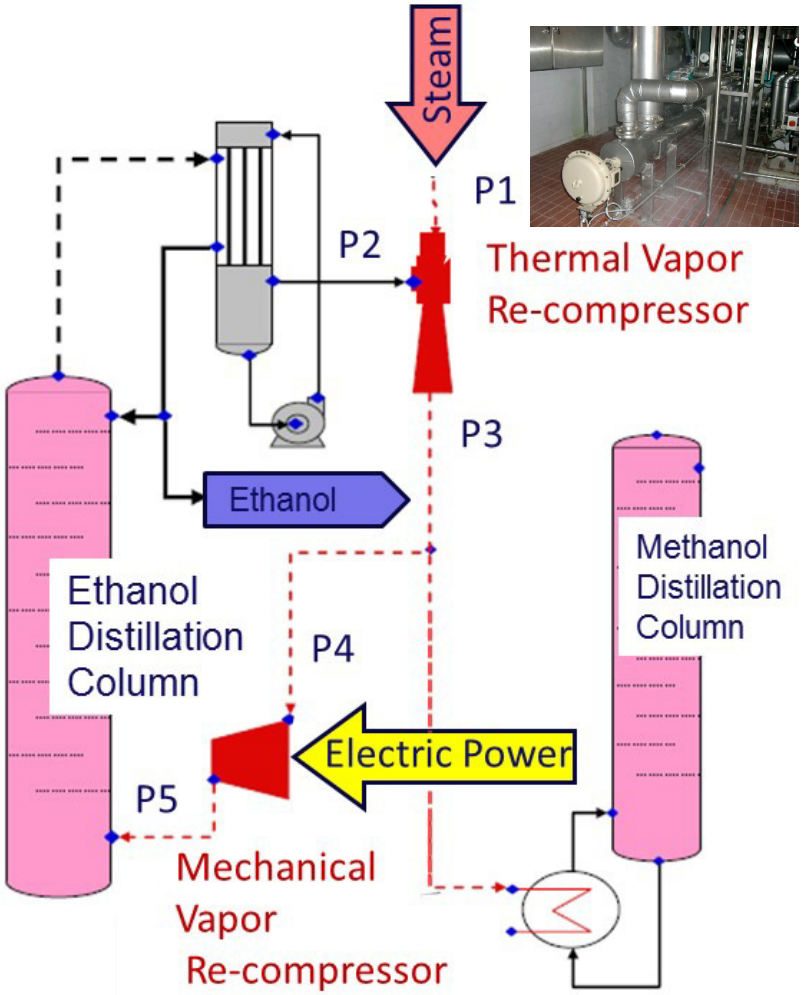

*: Mayekawa manufacturing Co. (2007). "A Case Study Application to Ethanol Distillation - the Possibility of Energy Conservation and Reduction of Carbon Dioxide Emissions by Vapor Recompression (VRC) System", Electro-heat, No. 155 (in Japanese)

Heat Pumps for Cutting and Washing Process

Industry	Automobile Parts Production
Process	Cutting, Washing
Application	Heating of Washing Liquid in the Washing Process (65°C), Cooling of Cutting Liquid in the Cutting Process (15°C)
Purpose	Reduction of Boiler Steam (Fuel Crude Oil)
Effect	Primary energy consumption was reduced by 73%.

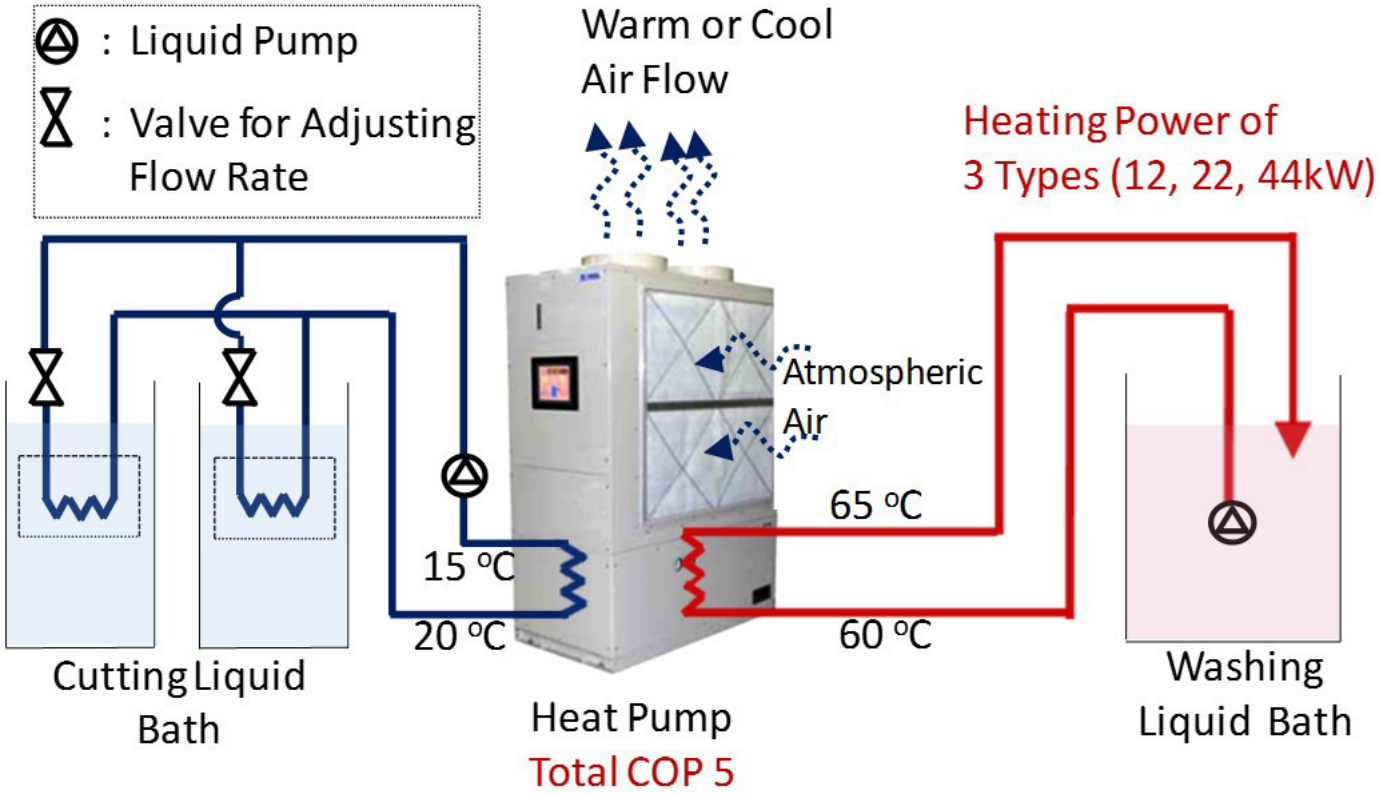

Air-to-Water and Water-to-Water Heat Pump With R134a Refrigerant

Shiba, Y., Tanifuji, K., Nakayama, H. and Sakuraba, I. (2012). "Development and Introduction of a Heat Pump for Washing Process", Proc. of the 2012 JSRAE Annual Conference, F114.

CO_2 Heat Pump Air Heater for Drying Process *

Industry	Laminate Printing
Process	Drying, Cooling
Application	Hot Air Supply to Drying Zone and Cool Water Supply to Cooling Roller
Purpose	Reduction of Steam (Fuel Gas)
System Overview	Water-source Heat Pump Using CO_2 Refrigerant (1 Unit) for Hot Air Supply with Heating Capacity 110 kW, Operating Range of Hot Air Leaving Temperature 80 to120 °C and That of Heat Source Water Entering Temperature 5 to 32 °C, COP
Effect	Primary energy consumption was reduced by 46%.

Reciprocating-type compressor
Heating air: from 20 to 100 °C Heating Capacity: 110 kW **Heating COP: 3.4**
Cooling water: from 30 to 25 °C Cooling Capacity: 81 kW, **Cooling COP: 2.5**
Total COP: 5.9

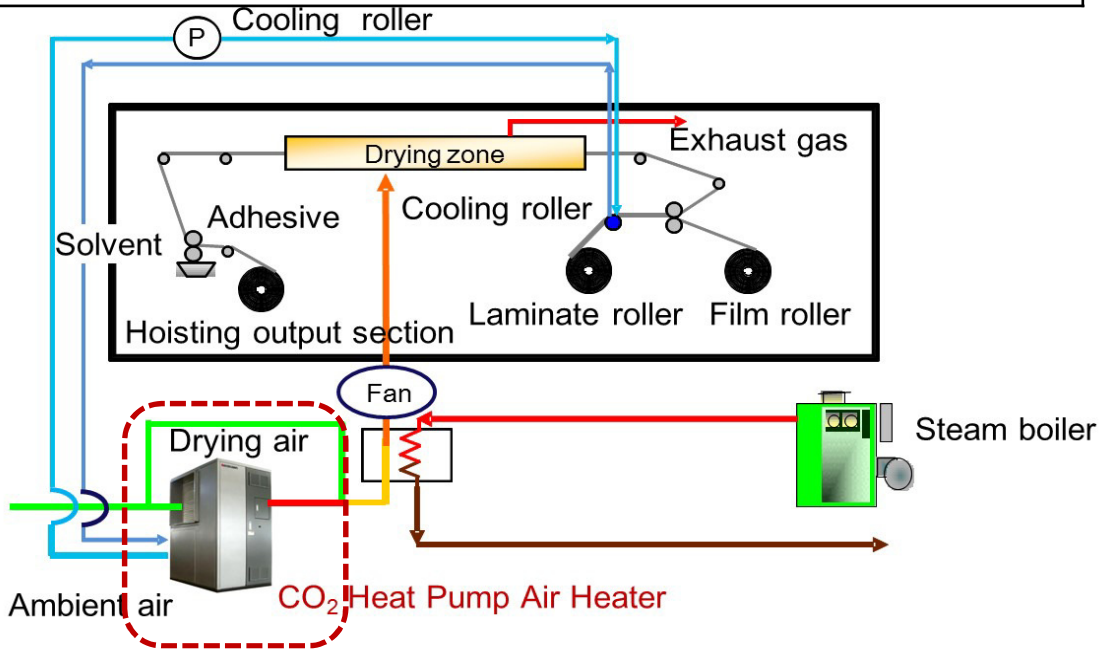

*: Kando, M. (2012). "Case Studies of High Temperature Heat Pump to the Industrial Field from System Study to Operation", Proc. of the 2012 JSRAE Annual Conference, F112.

Applying Heat Pump Technology to Agricultural Production *

Industry	Fruit Cultivation
Process	Green House Air-conditioning
Application	Space Heating in Winter and Space Cooling in Summer
Purpose	Reduction of Fuel Heavy Oil in Winter and Air-conditioning in Summer
System overview	Air-to-Air Inverter-controlled Greenhouse Heat Pumps using R410A (7 Units) with Heating Capacity 18 kW (20 °C) and Cooling Capacity 16 kW (27 °C) , Twin Type 6 Sets and Single Type 1 Set
Effect	Primary energy consumption was reduced by 49%.

Twin Type

Outdoor Unit 2 Indoor Units

Type	Twin	Single
Number of Indoor Units	2	1
Cooling (Standard) COP	5.48	3.86
Heating (Standard) COP	5.50	4.90
Heating (Cold climate) COP	3.77	3.20

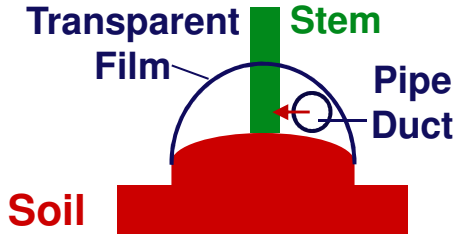

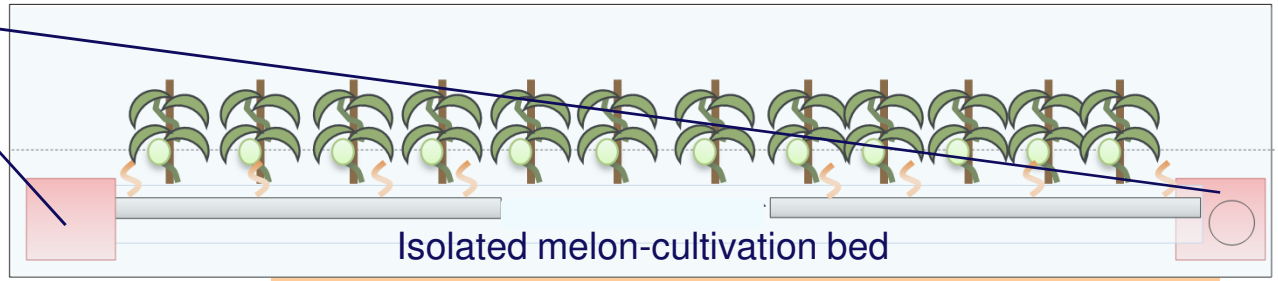

Cross sectional view of a greenhouse

*: JEHC (Sep. 2011). Electro-Heat Hand Book, Japan Electro-Heat Center (JEHC), Ohmsha, Tokyo, ISBN 978-4-274-21037-2.

Conclusions

1. Pioneering high-temperature heat pumps and their application in Japan
   - Transcritical CO_2 cycle
   - Single-stage compression reverse Rankine cycle
   - Two-stage compression reverse Rankine cycle
   - Cascade reverse Rankine cycle
   - Hybrid vapor recompression system
2. Significant energy savings are practicable by distributed heat pumps and heat recovery.

Industrial heat pump R&D works and applications in the Canadian energetic context: past achievements and future challenges

Workshop - IEA HPP / IETS Annex 35/13
"Application of Industrial Heat Pumps"

Vasile Minea, Hydro-Québec Research Institut, Laboratoire des technologies de l'énergie (LTE)

May 12th, 2014, Montréal (Québec), Canada

Hydro Québec

Average electricity pricing (2010)

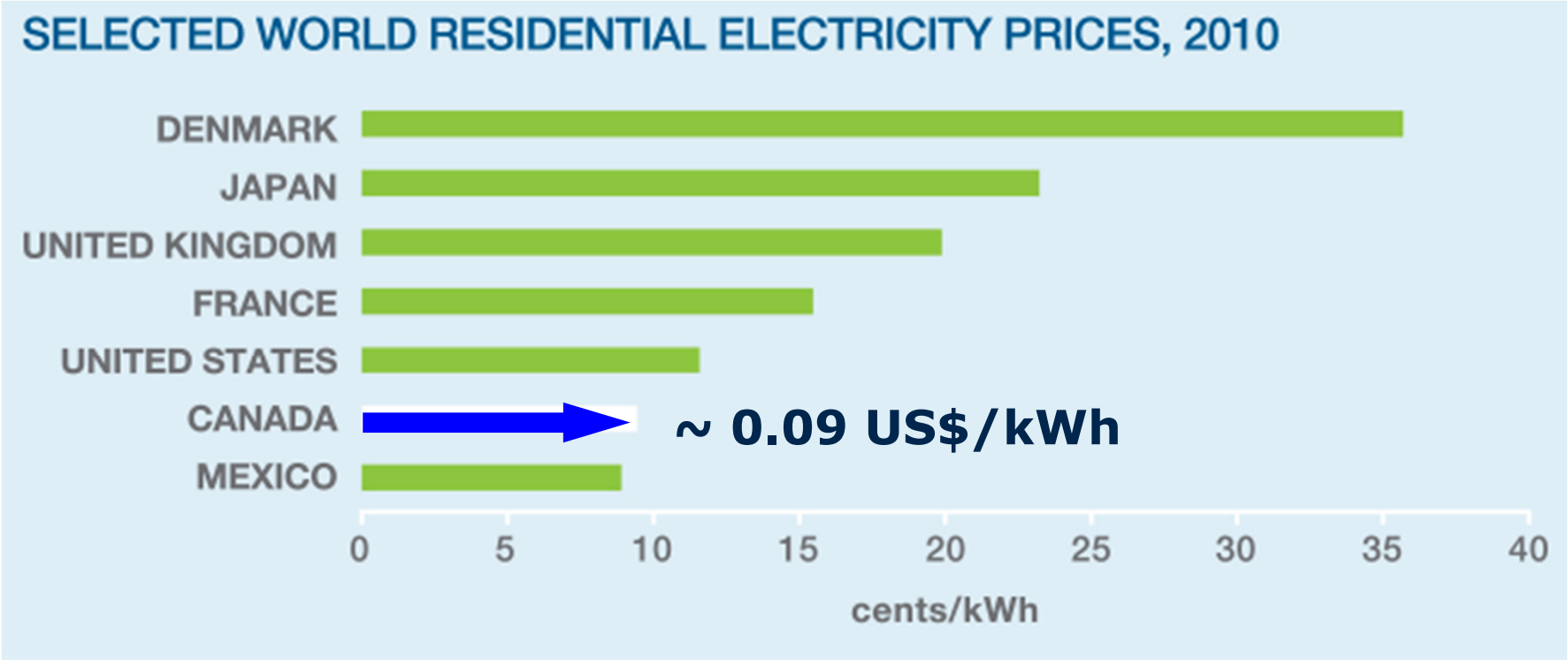

(Source: Natural Resources Canada)

Canadian energetic context

> Electricity: historically low prices

> Natural gas: prices going down since 2008

- Because of increase of United States shale gas production

→ Lower interest for waste heat recovery with electrically-driven industrial heat pumps in Canada

Heat recovery systems studied

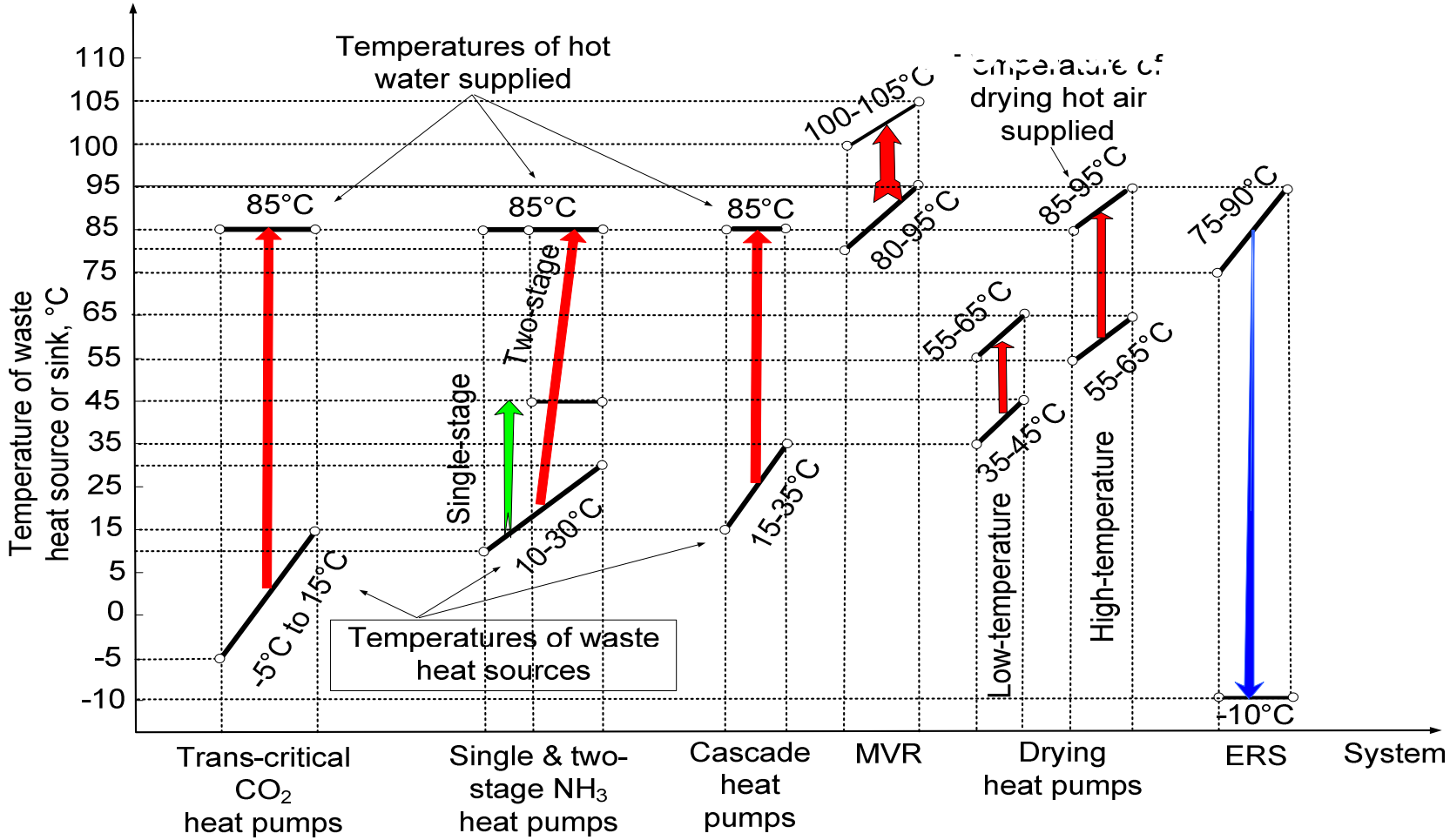

Industrial ammonia heat pumps

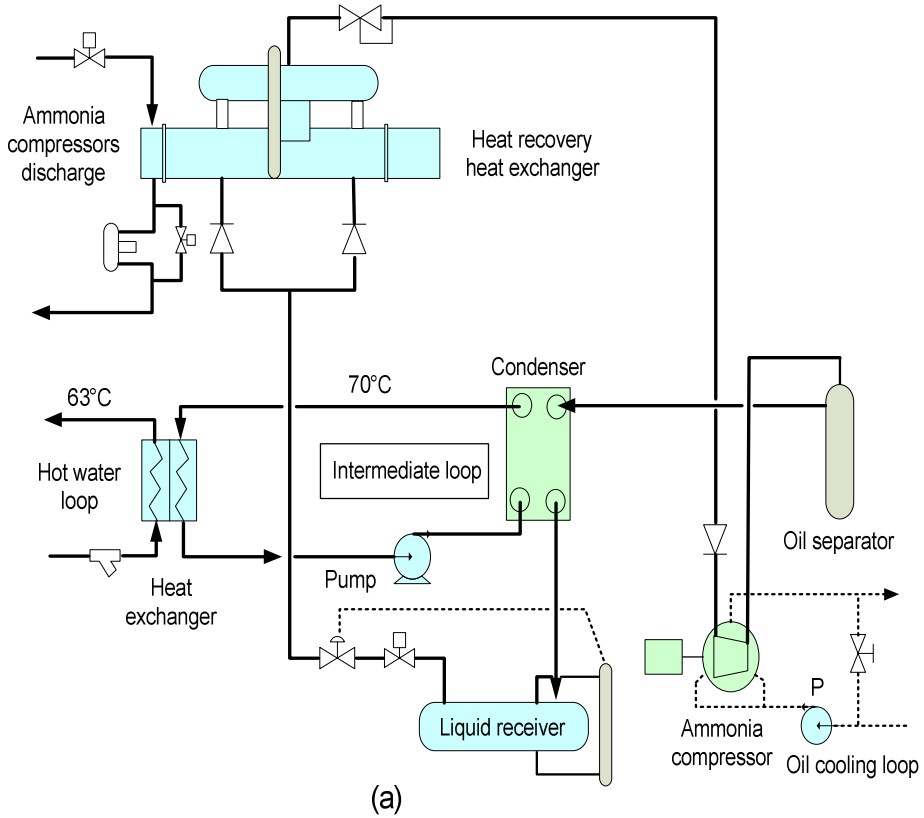

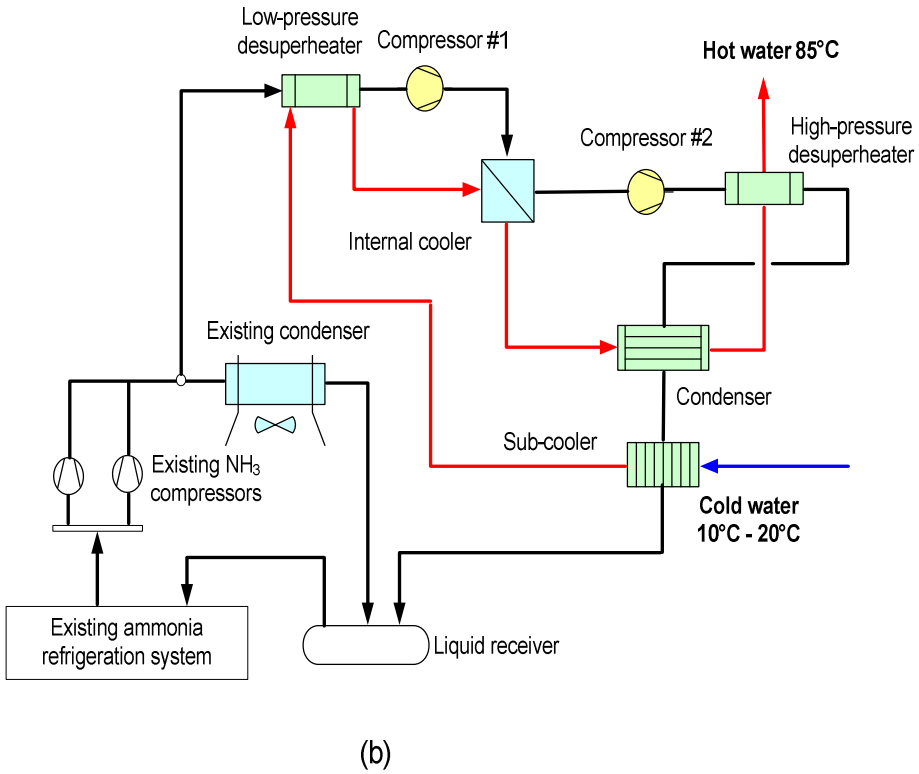

First single-stage NH_3 IHP implemented in a Canadian diary plant (Gosselin, 2013)

Opportunities for double-stage ammonia IHPs (www.vuilter-emerson.com)

Heat pump-assisted drying [2]

Industrial high-temperature HP for softwood drying (354 m³)

White Spruce
Balsam Fir

- 2 HPs – total 130 kW
  - HFC-236fa
  - Split HPs with remote condensers

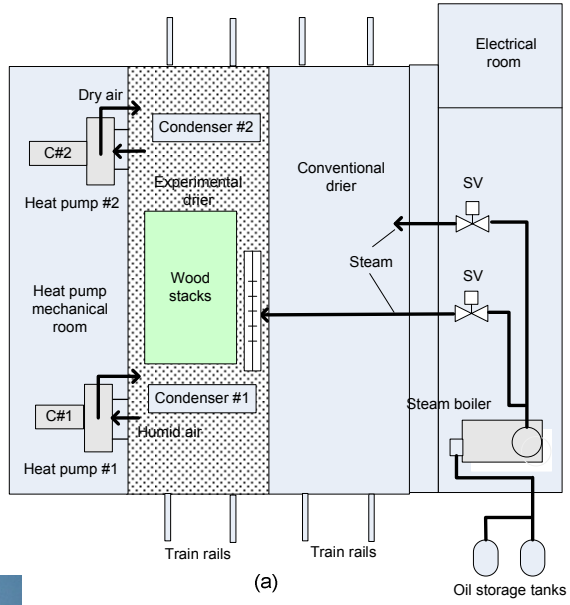

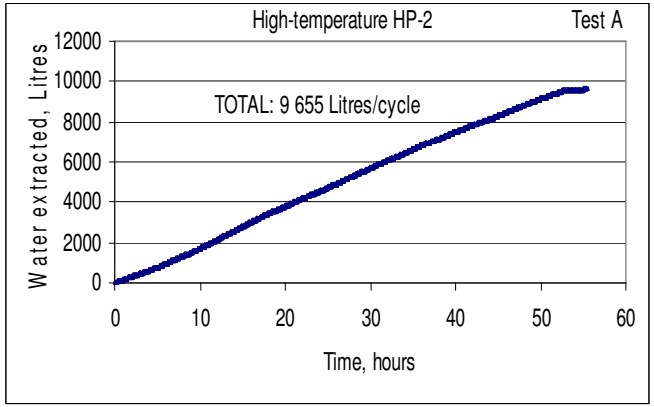

- > 19 300 Liters of water removed/cycle
  - SMER:1.46 to 2.52 kgw/kWh (compressors + blowers)
  - Energy savings: 27 to 57% vs. oil

Cold warehouse heat recovery

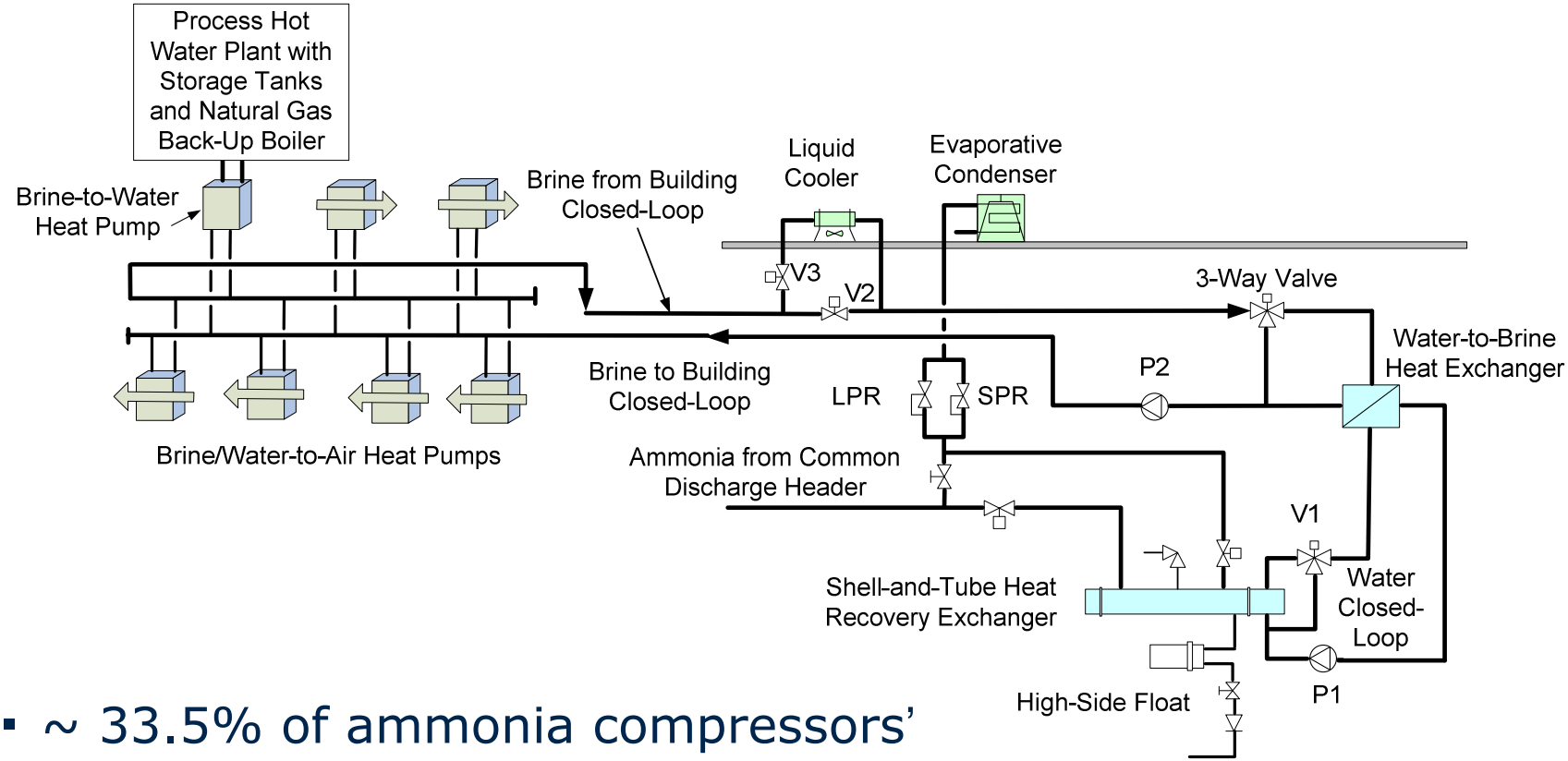

- ~ 33.5% of ammonia compressors' discharge heat – can be recovered
- 21 brine-to-air commercial heat pumps
- 2 brine-to-water industrial heat pumps

Conclusions

> In spite of present less favourable energetic context for industrial heat pump implementations in Canada:

- There are many opportunities for further future waste and/or process heat recovery from:
  - Liquid effluents (24.2% of total waste heat)
  - Exhausted gases (12.7% of total waste heat)
  - Wood driers
  - Large refrigeration plants (cold warehouses, etc.)
  - Cooling towers
  - Fish farms
  - Evaporation processes, etc.

How heat pumps can be used to improve energy efficiency of industrial processes

S. Wolf, U. Fahl, A. Voß

Institute for Energy Economics and the Rational Use of Energy (IER)

11th IEA Heat Pump Conference
IEA HPP/IETS Annex 35/13 Workshop
12th May 2014 in Montreal

Marktanalyse Industriewärmepumpen

Hersteller	Kältemittel	maximale Vorlauf-temperatur	Nennheizleistung
Cofely Refrigeration	R717, R134a	65 °C	50 kW bis 1.102 kW
Combitherm	R134a, R245fa	80 °C bis 100 °C	20 kW bis 5.000 kW
Friotherm	diverse	90 °C	2.000 kW bis 20.000 kW
GEA Refrigeration	R717	80 °C bis 90 °C	230 kW bis 10.000 kW
Hybrid Energy	R717, R718	115 °C	250 kW bis 2.500 kW
Johnson Controls	R410a, R134a, 245fa	52 °C bis 105 °C	188 kW bis 20.000 kW
KKT Chillers		70 °C	200 kW bis 1.000 kW
Klima Jentzsch	diverse	80 °C	100 kW bis 2.000 kW
KWT/Viessmann	diverse	60 °C bis 73 °C	15 kW bis 2.000 kW
Mayekawa	R717	85 °C	430 kW bis 523 kW
Ochsner	R134a, R407C, Öko1	50 °C bis 98 °C	65 kW bis 966 kW
Oilon Scancool	R410A, R134a	65 °C bis 80 °C	110 kW bis 540 kW
Star Refrigeration	diverse	65 °C bis 90 °C	45 kW bis 15.000 kW
thermea	R744	90 °C	45 kW bis 1.000 kW

Einsatz von Wärmepumpen in der Industrie

18 Anwendungsfälle aus

11 Industriezweigen

13 Anlagen zur Erzeugung von Raumwärme aus Abwärme

5 Anlagen zur Erzeugung von Prozesswärme aus Abwärme

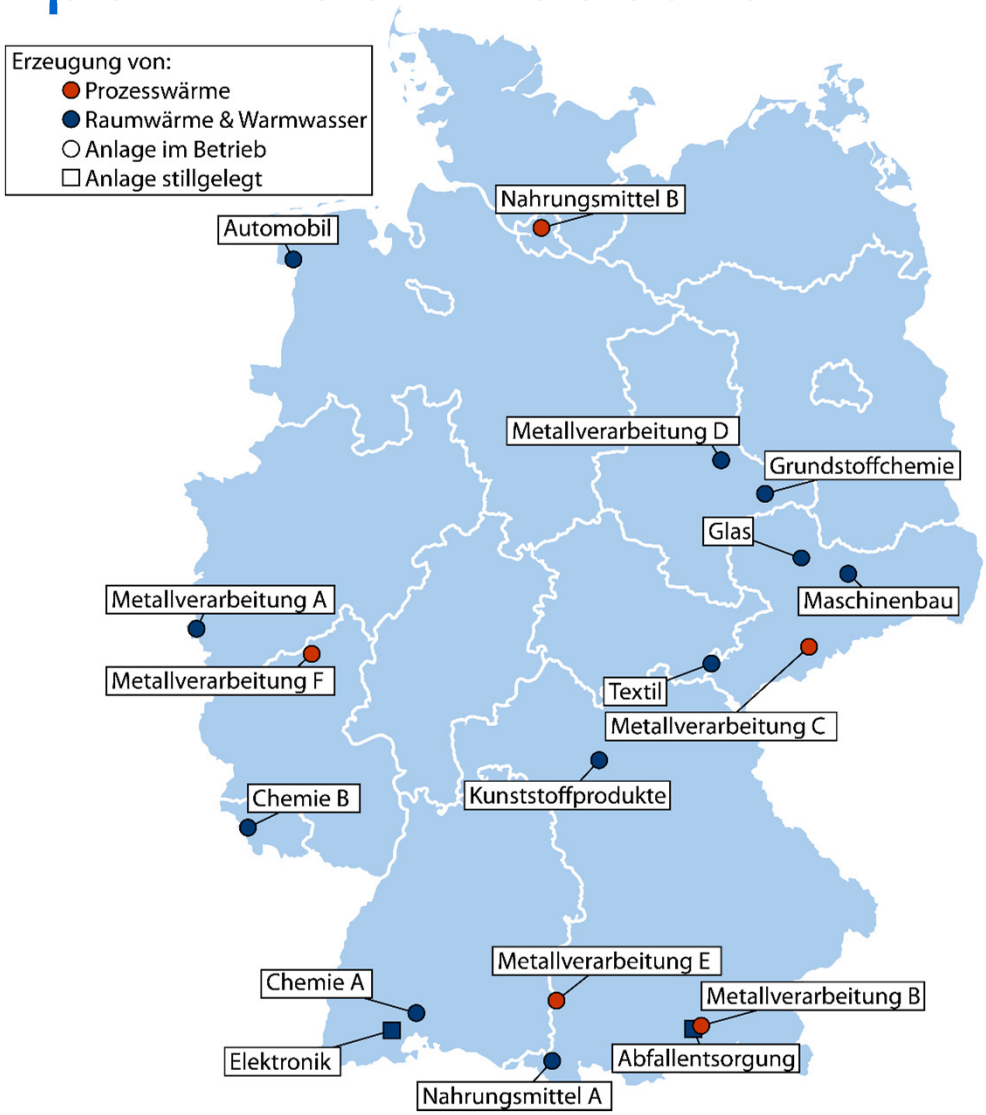

Temperaturniveaus der Anwendungsfälle

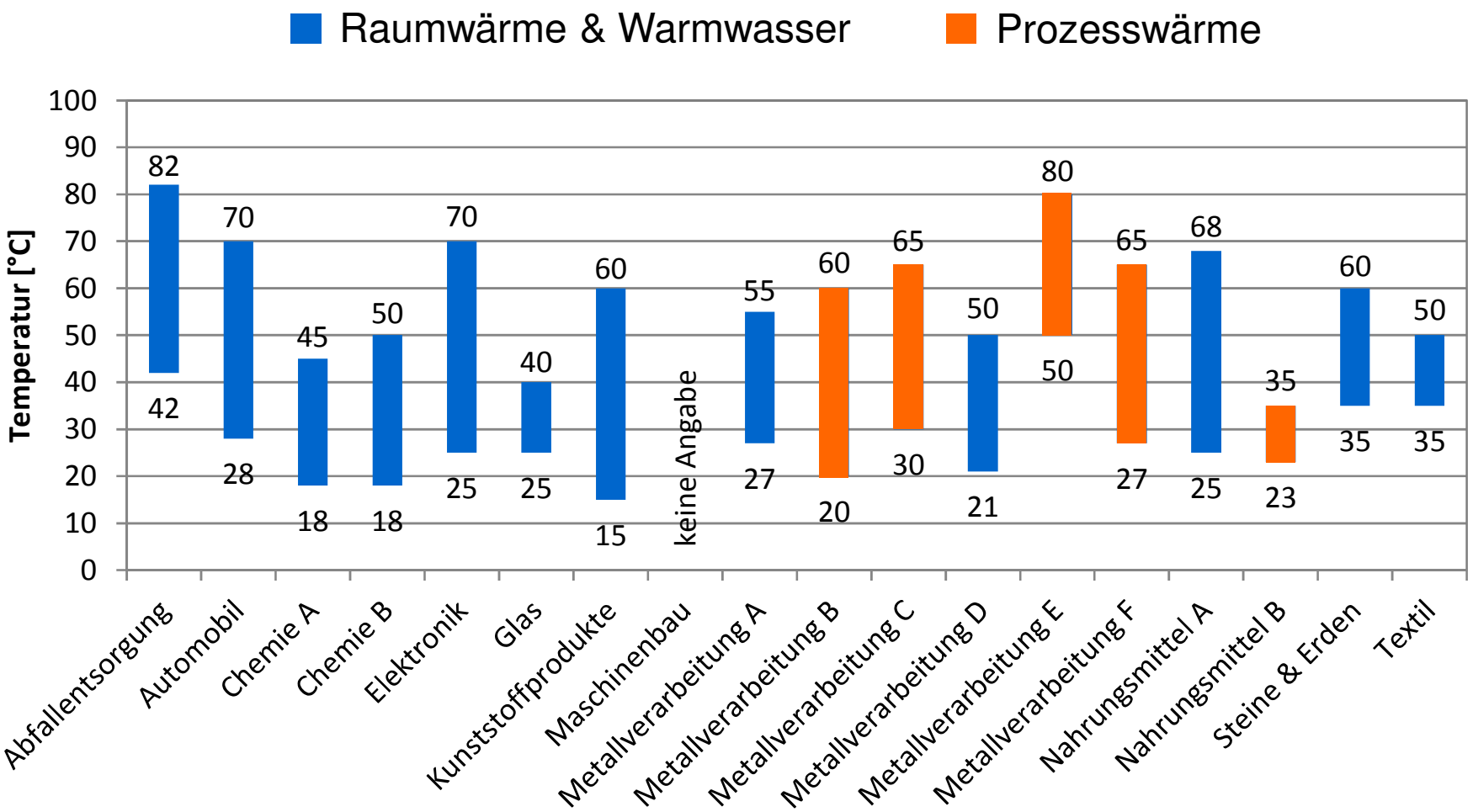

Example 1: Part cleaning system

Integration of a high temperature heat pump using R245fa into an industrial part cleaning system in cooperation with Dürr Ecoclean GmbH and Combitherm GmbH.

Source: Combitherm GmbH

Source: Combitherm GmbH

Example 1: Part cleaning system

- Bath preparation capacity increased by 75 %
- Energy consumption reduced by 31 %
- Under typical operating conditions the heat pump saves 24 t/(CO_2*a)

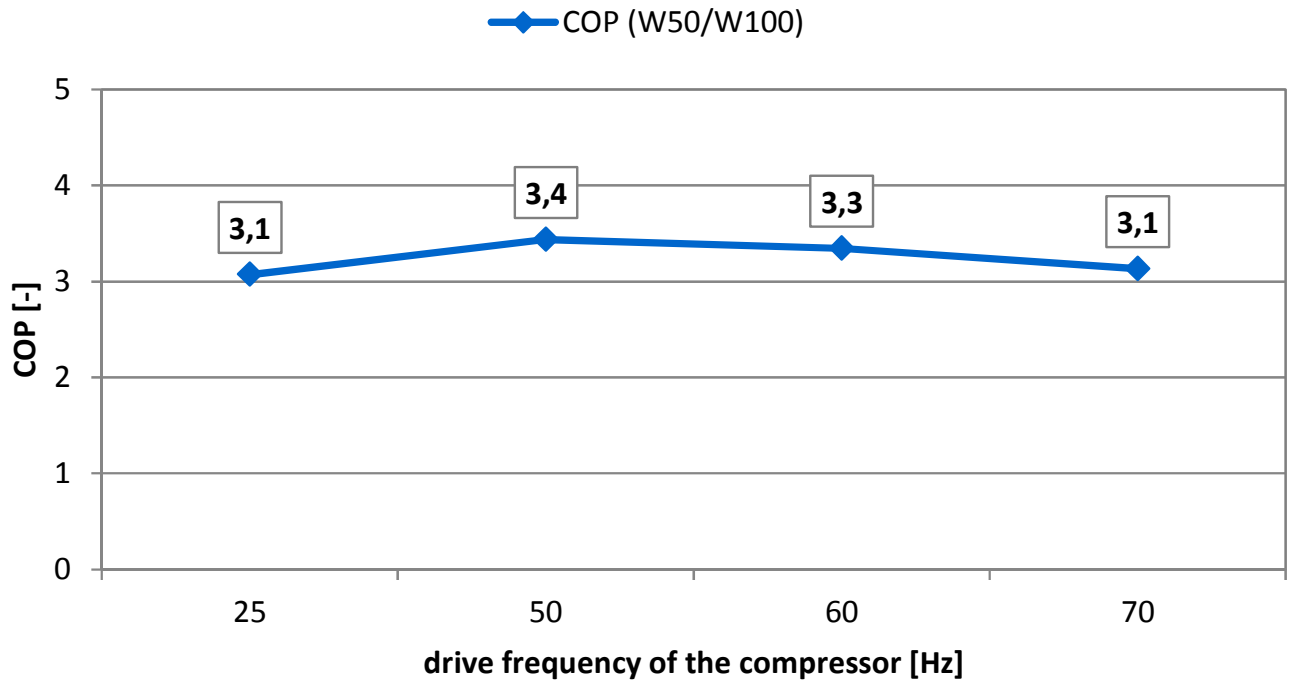

Example 2: Malt production

Electric compression heat pump in malt production	
Industrial branch	Food - malt production
Type of heat pump	Electric compression heat pump
Heating capacity	3,250 kW
Heat source description	Process exhaust air
Heat source temperature	23 °C
Heat sink description	Process heat for a kiln
Heat sink temperature	35 °C
COP	6,3
refrigerant	R717 (Ammonia)
Installation cost	1.820.000 € (Heat Pump & Installation)
Payback period	5,3 a
Internal return rate (IRR)	24 %

Conclusion

- Heat pumps can provide high temperatures up to 100 °C at large heating capacities (several MW).
- Industrial heat pump systems in Germany reach payback times between 2 and 7 years (IRR between 12 % and 50 %)
- **Heat pumps become especially economical feasible, when both hot and cold side are used**

→ Heat pumps are ready for the industry!

Barriers and threats:

- Insufficient knowledge about industrial processes among HVAC planners
- Rising electricity prices in Germany, while gas prices remain stable.

Industrial Heat Pumps in Austria

Absorption heat pump in a wood-processing company

René Rieberer, Gerald Zotter
Institute of Thermal Engineering (IWT)
Graz University of Technology
Rene.Rieberer@tugraz.at
http://www.iwt.tugraz.at

IEA HPP/IETS Annex 35/13 – Workshop
Montreal, May 12th, 2014

High-temperature HPs of Austrian manufacturers:E.g.

Company **Ochsner** offers HPs

- with **new refrigerant** ("Öko 1"): non-flammable, not toxic
- for **heat sink temperatures** up to **95°C** (temp. difference 5 to 10 K)
- Two different types:
  - IHWSS for a temperature lift from 10 to 95°C
  - IHWS for a temperature lift from 40 to 95°C

High-temperature heat pump (Ochsner, 2013)

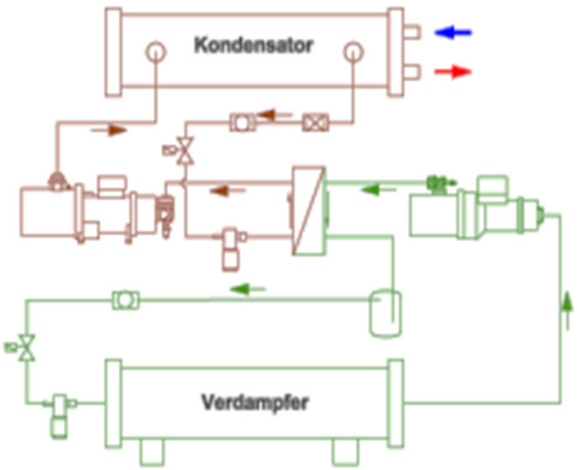

IWHSS "two-stage" – Cascade cycle (Ochsner, 2013)

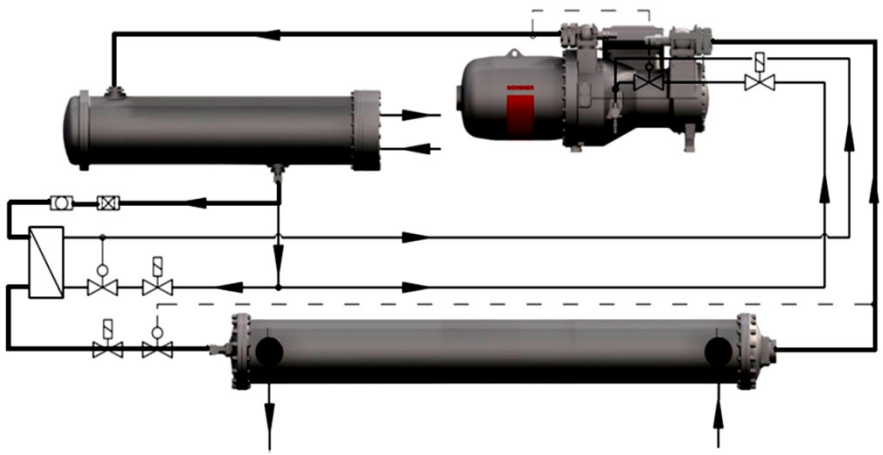

IWHS "single-stage" – economizer cycle (Ochsner, 2013)

Example of a national R&D project on High-temp.HP

"HyPump" – Absorption/Compression ("Hybrid") Heat Pump

Duration: 2012 – 2015

Project Partners: AIT Austrian Institute of Technology – Tomorrow Today; FRIGOPOL; Institut für Wärmetechnik

Supported by: FFG; klima+ energie fonds **(FFG-Project.: 834614)**

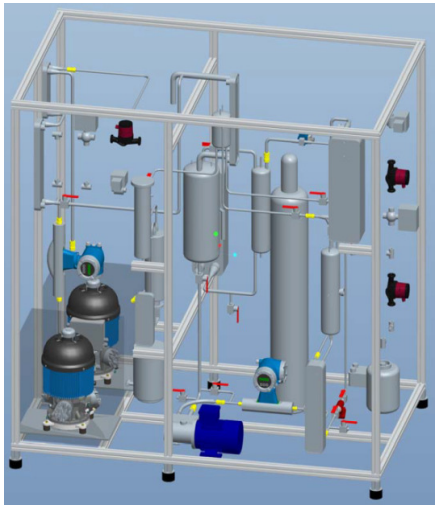

3D Model of the "Hybrid" heat pump system test facility @ IWT (Hannl, 2013)

Aim of the project: Development of a hybrid HP for industrial applications w.

- heat sink outlet temperature up to ca**. 100°C**
- **Q_h < 50 kW**
- **alternative solvent** for ammonia
- **standard components**

Status: Exp. analysis in laboratory in progress.

AHP for flue gas condensation (1/10)

Example: Waste heat recovery in a biomass plant in Hallein (Salzburg)

- **Biomas co-generation plant**
  - 30 MW_{th}
  - 5 MW_{el}

- **H_2O/LiBr – AHP for flue gas condensation**
  - Utilization of waste heat of flue gas
  - Upgrade to useful temperature level
  - Heat supply to the district heating network of Salzburg

(Source: schweighofer-fibre.at)

AHP for flue gas condensation (7/10)

Savings:

- Fuel reduction
- Primary energy savings: ca. 15 GWh/a
- Emission reduction: 6,000 tons of CO_2/a
- Cost reduction:
  - + Operation costs (fuel)
  - + Costs for fuel-storage
  - + Cost for ash removal
  - + Cost for vapour discharge system

Conclusions

- **Industry one of the biggest CO_2 emitters in Austria**
- High dependency on imported fossil fuels of Austrian Industry
- IHP not widely used, but several plants in operation (compression and absorption)
- AHP in Industry

  + heating propose: upgrade of industrial waste heat

  + cooling purpose: use of industrial waste heat as driving source
- **AHP for flue gas condensation in biomass co-generation plants**

  + Latent heat can be used for district heating

  + Saving emissions (CO_2), costs (fuel, fuel-storage, ash-removal, vapour discharging systems)

Conclusions

- Industry one of the biggest CO_2 emitters in Austria
- High dependency on imported fossil fuels of Austrian Industry
- IHP not widely used, but several plants in operation (compression and absorption)
- AHP in Industry

  + heating propose: upgrade of industrial waste heat

  + cooling purpose: use of industrial waste heat as driving source
- **AHP for flue gas condensation in biomass co-generation plants**

  + Latent heat can be used for district heating

  + Saving emissions (CO_2), costs (fuel, fuel-storage, ash-removal, vapour discharging systems)

Conclusion

The main objectives of the project include

- market overviews in the participating countries (country reports),
- systems aspects and opportunities,
- apparatus technologies (R&D projects)
- and system technologies (case studies).

The project collected

- 39 R&D-projects
- 115 case studies.

These examples show successful integration of heat pumps.

Payback periods, which are lower than 1.5 years are possible in some examples.

CO_2-emissions and energy costs can be reduce by more than 80 % in some cases.

Herzlichen Dank für Ihre Aufmerksamkeit

EUROPEAN HEAT PUMP SUMMIT

POWERED BY CHILLVENTA

SYMPOSIUM + EXPO
NUREMBERG, 20–21.10.2015

Industrial | Commercial | Residential
Heating & Cooling | Components & Equipment

hp-summit.de

NÜRNBERG MESSE